Summaries of the proposed cost of service

# PNM A Series Schedules

Schedule A-1: Summary of the overall cost of service and the claimed revenue deficiency

Schedule A-2: Summary of the revenue increase or decrease at the proposed rates by rate classes

Schedule A-3: Summary of the cost of service adjustments by functional classification

Schedule A-4: Summary of Rate Base

Schedule A-5: Summary of total capitalization and the weighted average cost of capital

# PNM Schedule A-1

Summary of the overall cost of service and the claimed revenue deficiency

| | A | B | C |
|---|---|---|---|
| 1 | **Public Service Company of New Mexico** | | |
| 2 | **Schedule A-1** | | |
| 3 | **Summary of the Overall Cost-of-Service** | | |
| 4 | **and Claimed Revenue Deficiency** | | |
| 5 | **Base Period Ending 6/30/2026** | | |
| 6 | **Test Period Ending 9/30/2028** | | |
| 7 | **This schedule is sponsored by PNM Witness Gutierrez** | | |
| 8 | **Description** | **Total Company Base Period** | **Total Company Base Period Adjustments** |
| 9 | | | |
| 10 | Total Rate Base | 4,819,520,914 | (370,225,920) |
| 11 | Return on Rate Base | 338,547,366 | (26,039,415) |
| 12 | Allowable Federal Income Tax | 30,296,865 | (4,950,221) |
| 13 | Allowable State Income Tax | 15,618,199 | (1,390,776) |
| 14 | Operations & Maintenance Expenses | | |
| 15 | Base Fuel, Net of Off-System Sales | 223,905,330 | (38,902,755) |
| 16 | O&M, Excluding Base Fuel, Net of Off-System Sales | 728,180,306 | (271,188,943) |
| 17 | Operations & Maintenance Expenses | 952,085,636 | (310,091,698) |
| 18 | | | |
| 19 | Depreciation & Amortization Expenses | 221,444,430 | 50,673,146 |
| 20 | Taxes Other Than Income | 60,364,644 | (2,417,344) |
| 21 | Other Allowable Expenses | 31,887,597 | (8,267,535) |
| 22 | Revenue Credits | (46,158,980) | 12,622,633 |
| 23 | Revenue Tax | 9,464,106 | (1,710,181) |
| 24 | | | |
| 25 | Revenue Requirements | | |
| 26 | Fuel (FPPCAC) Revenue requirements | 223,905,330 | (38,902,755) |
| 27 | Non-Fuel revenue requirements | 1,389,644,533 | (252,668,637) |
| 28 | Total Revenue Requirement | 1,613,549,863 | (291,571,391) |
| 29 | | | |
| 30 | Base Period Existing Revenues - Fuel | | |
| 31 | Base Peiod Revenue Deficiency - Fuel | | |
| 32 | | | |
| 33 | Base Period Existing Revenues - Non-Fuel | | |
| 34 | Base Peiod Revenue Deficiency - Non-Fuel | | |
| 35 | | | |
| 36 | Test Period Existing Revenues - Fuel | | |
| 37 | Test Peiod Revenue Deficiency - Fuel | | |
| 38 | | | |
| 39 | Test Period Existing Revenues - Non-Fuel | | |
| 40 | Test Peiod Revenue Deficiency - Non-Fuel | | |
| 41 | | | |

| | A | D | E |
|---|---|---|---|
| 1 | **Public Service Company of New Mexico** | | |
| 2 | **Schedule A-1** | | |
| 3 | **Summary of the Overall Cost-of-Service** | | |
| 4 | **and Claimed Revenue Deficiency** | | |
| 5 | **Base Period Ending 6/30/2026** | | |
| 6 | **Test Period Ending 9/30/2028** | | |
| 7 | **This schedule is sponsored by PNM Witness Gutierrez** | | |
| 8 | **Description** | **Total Company Adjusted Base** | **Adjustments from Base to Test Period** |
| 9 | | | |
| 10 | Total Rate Base | 4,449,294,994 | 868,515,840 |
| 11 | Return on Rate Base | 312,507,951 | 87,161,901 |
| 12 | Allowable Federal Income Tax | 25,346,644 | 7,466,800 |
| 13 | Allowable State Income Tax | 14,227,423 | 2,401,819 |
| 14 | Operations & Maintenance Expenses | | |
| 15 | Base Fuel, Net of Off-System Sales | 185,002,575 | (17,308,701) |
| 16 | O&M, Excluding Base Fuel, Net of Off-System Sales | 456,991,363 | 124,283,263 |
| 17 | Operations & Maintenance Expenses | 641,993,938 | 106,974,562 |
| 18 | | | |
| 19 | Depreciation & Amortization Expenses | 272,117,576 | 46,973,965 |
| 20 | Taxes Other Than Income | 57,947,300 | 10,149,207 |
| 21 | Other Allowable Expenses | 23,620,062 | 9,088,714 |
| 22 | Revenue Credits | (33,536,347) | 4,088,294 |
| 23 | Revenue Tax | 7,753,925 | 1,618,401 |
| 24 | | | |
| 25 | Revenue Requirements | | |
| 26 | Fuel (FPPCAC) Revenue requirements | 185,002,575 | (17,308,701) |
| 27 | Non-Fuel revenue requirements | 1,136,975,897 | 293,232,365 |
| 28 | Total Revenue Requirement | 1,321,978,472 | 275,923,663 |
| 29 | | | |
| 30 | Base Period Existing Revenues - Fuel | | |
| 31 | Base Peiod Revenue Deficiency - Fuel | | |
| 32 | | | |
| 33 | Base Period Existing Revenues - Non-Fuel | | |
| 34 | Base Peiod Revenue Deficiency - Non-Fuel | | |
| 35 | | | |
| 36 | Test Period Existing Revenues - Fuel | | |
| 37 | Test Peiod Revenue Deficiency - Fuel | | |
| 38 | | | |
| 39 | Test Period Existing Revenues - Non-Fuel | | |
| 40 | Test Peiod Revenue Deficiency - Non-Fuel | | |
| 41 | | | |

| | A | F | G |
|---|---|---|---|
| 1 | **Public Service Company of New Mexico** | | |
| 2 | **Schedule A-1** | | |
| 3 | **Summary of the Overall Cost-of-Service** | | |
| 4 | **and Claimed Revenue Deficiency** | | |
| 5 | **Base Period Ending 6/30/2026** | | |
| 6 | **Test Period Ending 9/30/2028** | | |
| 7 | **This schedule is sponsored by PNM Witness Gutierrez** | | |
| 8 | **Description** | **Total Company Test Period** | **PNM Base Rate Adjusted Base Period** |
| 9 | | | |
| 10 | Total Rate Base | 5,317,810,834 | 3,423,397,458 |
| 11 | Return on Rate Base | 399,669,852 | 241,790,420 |
| 12 | Allowable Federal Income Tax | 32,813,444 | 18,041,491 |
| 13 | Allowable State Income Tax | 16,629,242 | 10,798,856 |
| 14 | Operations & Maintenance Expenses | | |
| 15 | Base Fuel, Net of Off-System Sales | 167,693,874 | 148,907,711 |
| 16 | O&M, Excluding Base Fuel, Net of Off-System Sales | 581,274,626 | 425,004,042 |
| 17 | Operations & Maintenance Expenses | 748,968,500 | 573,911,754 |
| 18 | | | |
| 19 | Depreciation & Amortization Expenses | 319,091,540 | 221,342,810 |
| 20 | Taxes Other Than Income | 68,096,507 | 44,822,703 |
| 21 | Other Allowable Expenses | 32,708,776 | 21,702,590 |
| 22 | Revenue Credits | (29,448,053) | (27,753,428) |
| 23 | Revenue Tax | 9,372,326 | 6,517,477 |
| 24 | | | |
| 25 | Revenue Requirements | | |
| 26 | Fuel (FPPCAC) Revenue requirements | 167,693,874 | 148,907,711 |
| 27 | Non-Fuel revenue requirements | 1,430,208,261 | 962,266,962 |
| 28 | Total Revenue Requirement | 1,597,902,135 | 1,111,174,673 |
| 29 | | | |
| 30 | Base Period Existing Revenues - Fuel | | 212,695,317 |
| 31 | Base Peiod Revenue Deficiency - Fuel | | (63,787,606) |
| 32 | | | |
| 33 | Base Period Existing Revenues - Non-Fuel | | 857,604,015 |
| 34 | Base Peiod Revenue Deficiency - Non-Fuel | | 104,662,947 |
| 35 | | | |
| 36 | Test Period Existing Revenues - Fuel | | |
| 37 | Test Peiod Revenue Deficiency - Fuel | | |
| 38 | | | |
| 39 | Test Period Existing Revenues - Non-Fuel | | |
| 40 | Test Peiod Revenue Deficiency - Non-Fuel | | |
| 41 | | | |

| | A | H | I |
|---|---|---|---|
| 1 | **Public Service Company of New Mexico** | | |
| 2 | **Schedule A-1** | | |
| 3 | **Summary of the Overall Cost-of-Service** | | |
| 4 | **and Claimed Revenue Deficiency** | | |
| 5 | **Base Period Ending 6/30/2026** | | |
| 6 | **Test Period Ending 9/30/2028** | | |
| 7 | **This schedule is sponsored by PNM Witness Gutierrez** | | |
| 8 | **Description** | **PNM Base Rate Test Period** | **Reference See Notes** |
| 9 | | | |
| 10 | Total Rate Base | 4,215,259,299 | |
| 11 | Return on Rate Base | 316,615,179 | |
| 12 | Allowable Federal Income Tax | 20,700,426 | |
| 13 | Allowable State Income Tax | 12,547,376 | |
| 14 | Operations & Maintenance Expenses | | |
| 15 | Base Fuel, Net of Off-System Sales | 134,138,322 | |
| 16 | O&M, Excluding Base Fuel, Net of Off-System Sales | 544,985,157 | |
| 17 | Operations & Maintenance Expenses | 679,123,479 | |
| 18 | | | |
| 19 | Depreciation & Amortization Expenses | 264,866,450 | |
| 20 | Taxes Other Than Income | 53,025,427 | |
| 21 | Other Allowable Expenses | 30,957,182 | |
| 22 | Revenue Credits | (23,251,100) | |
| 23 | Revenue Tax | 7,992,048 | |
| 24 | | | |
| 25 | Revenue Requirements | | |
| 26 | Fuel (FPPCAC) Revenue requirements | 134,138,322 | |
| 27 | Non-Fuel revenue requirements | 1,228,438,144 | |
| 28 | Total Revenue Requirement | 1,362,576,466 | |
| 29 | | | |
| 30 | Base Period Existing Revenues - Fuel | | |
| 31 | Base Peiod Revenue Deficiency - Fuel | | |
| 32 | | | |
| 33 | Base Period Existing Revenues - Non-Fuel | | |
| 34 | Base Peiod Revenue Deficiency - Non-Fuel | | |
| 35 | | | |
| 36 | Test Period Existing Revenues - Fuel | 246,607,131 | |
| 37 | Test Peiod Revenue Deficiency - Fuel | (112,468,809) | |
| 38 | | | |
| 39 | Test Period Existing Revenues - Non-Fuel | 942,109,637 | |
| 40 | Test Peiod Revenue Deficiency - Non-Fuel | 286,328,507 | |
| 41 | | | |

| | A |
|---|---|
| 1 | **Public Service Company of New Mexico** |
| 2 | **Schedule A-1** |
| 3 | **Summary of the Overall Cost-of-Service** |
| 4 | **and Claimed Revenue Deficiency (Notes)** |
| 5 | **Base Period Ending 6/30/2026** |
| 6 | **Test Period Ending 9/30/2028** |
| 7 | **This schedule is sponsored by PNM Witness Gutierrez** |
| 8 | |
| 9 | Column B - Please refer to PNM Exhibit RNG-3 COS Base Adj, Column F |
| 10 | Column D - Please refer to PNM Exhibit RNG-3 COS BASE, Column G |
| 11 | Column F - Please refer to PNM Exhibit RNG-3 COS Test, Column I |
| 12 | Column G - Please refer to PNM Exhibit RNG-3 COS BASE, Column J |
| 13 | Column H - Please refer to PNM Exhibit RNG-3 COS Test, Column L |
| 14 | Please see Rule 530 Schedule I-2 for the resulting return. |
| 15 | Base period data is historical information from the Company's Book Balance Amounts |
| 16 | Please refer to PNM Exhibit RNG-4 and the testimony of PNM Witness Gutierrez for further discussion |
| 17 | of base period adjustments and adjustments from adjusted base period to test period. |
| 18 | Base period data is historical information from the Company's Book Balance Amounts. |

# PNM Schedule A-2

Summary of the revenue increase or decrease at the proposed rates by rate classes

**Public Service Company of New Mexico**
**A-2 Summary of the Revenue Increase at the Proposed Rates by Rate Class**
Test Period Ending September 30, 2028

| Line No. | Consolidated Tariff Class | Revenue Under Existing Rates: Non-Fuel Base Revenue | Revenue Under Existing Rates: FPPCAC Revenue Under Existing Rates (Rates as of 10/1/2026) | Revenue Under Existing Rates: Total |
|---|---|---|---|---|
| 1 | 1A/1B - Residential | $462,543,285 | $85,020,200 | **$547,563,485** |
| 2 | 2A/2B - Small Power | $111,916,105 | $23,984,600 | **$135,900,705** |
| 3 | 3B - General Power | $123,151,613 | $35,817,162 | **$158,968,775** |
| 4 | 3C - General Power (Low Load Factor) | $37,223,540 | $9,003,752 | **$46,227,292** |
| 5 | 3D - Municipalities and Counties General Power | $8,607,191 | $2,732,076 | **$11,339,267** |
| 6 | 3E - Municipalities and Counties General Power (Low Load Factor) | $2,303,000 | $574,999 | **$2,878,000** |
| 7 | 3F - Non-Residential Charging Station | $941,870 | $249,983 | **$1,191,853** |
| 8 | 4B - Large Power | $67,116,066 | $24,612,265 | **$91,728,331** |
| 9 | 5B - Large Service for Customers >=8,000kW | $0 | $0 | **$0** |
| 10 | 10A/10B - Irrigation | $2,258,961 | $613,543 | **$2,872,504** |
| 11 | 11B - Water/Sewage Pumping | $8,035,388 | $4,104,759 | **$12,140,147** |
| 12 | 15B - Universities 115kV | $4,258,972 | $1,769,350 | **$6,028,322** |
| 13 | 30B - Manufacturing (30 MW) | $32,052,215 | $17,767,070 | **$49,819,285** |
| 14 | 33B - Station Service | $1,337,400 | $257,619 | **$1,595,019** |
| 15 | 35B - Large Power >=3,000kW | $14,292,144 | $7,415,197 | **$21,707,342** |
| 16 | 36B - Special Service - Renew. Energy Resources | $58,169,054 | $31,632,902 | **$89,801,956** |
| 17 | 6 - Private Lighting | $2,463,478 | $286,401 | **$2,749,879** |
| 18 | 20 - Streetlighting | $5,439,353 | $765,252 | **$6,204,606** |
| 19 | Tariff Class Totals | $942,109,637 | $246,607,131 | **$1,188,716,768** |

| Line No. | Consolidated Tariff Class | Revenue Under Proposed Rates: Proposed Non-Fuel Base Revenue | Revenue Under Proposed Rates: FPPCAC Revenue Under Proposed Rates | Revenue Under Proposed Rates: Total |
|---|---|---|---|---|
| 20 | 1A/1B - Residential | $605,786,972 | $46,372,354 | **$652,159,326** |
| 21 | 2A/2B - Small Power | $142,401,196 | $13,081,860 | **$155,483,057** |
| 22 | 3B - General Power | $156,697,171 | $19,535,665 | **$176,232,836** |
| 23 | 3C - General Power (Low Load Factor) | $47,362,948 | $4,910,894 | **$52,273,842** |
| 24 | 3D - Municipalities and Counties General Power | $10,977,439 | $1,490,149 | **$12,467,589** |
| 25 | 3E - Municipalities and Counties General Power (Low Load Factor) | $2,930,320 | $313,620 | **$3,243,941** |
| 26 | 3F - Non-Residential Charging Station | $1,256,751 | $136,348 | **$1,393,099** |
| 27 | 4B - Large Power | $85,397,969 | $13,374,713 | **$98,772,682** |
| 28 | 5B - Large Service for Customers >=8,000kW | $0 | $0 | **$0** |
| 29 | 10A/10B - Irrigation | $2,942,421 | $334,643 | **$3,277,064** |
| 30 | 11B - Water/Sewage Pumping | $10,721,739 | $2,230,594 | **$12,952,333** |
| 31 | 15B - Universities 115kV | $5,419,084 | $955,057 | **$6,374,140** |
| 32 | 30B - Manufacturing (30 MW) | $40,782,994 | $9,605,918 | **$50,388,912** |
| 33 | 33B - Station Service | $1,701,698 | $139,057 | **$1,840,755** |
| 34 | 35B - Large Power >=3,000kW | $18,185,215 | $4,009,090 | **$22,194,305** |
| 35 | 36B - Special Service - Renew. Energy Resources | $85,514,451 | $17,074,758 | **$102,589,209** |
| 36 | 6 - Private Lighting | $3,134,511 | $156,211 | **$3,290,722** |
| 37 | 20 - Streetlighting | $7,225,266 | $417,390 | **$7,642,655** |
| 38 | Tariff Class Totals | $1,228,438,144 | $134,138,322 | **$1,362,576,466** |

This schedule is sponsored by PNM witness Larkin

**Public Service Company of New Mexico**
**A-2 Summary of the Revenue Increase at the Proposed Rates by Rate Class**
Test Period Ending September 30, 2028

| Line No. | Consolidated Tariff Class | Total Revenue Deficiency | | |
|---|---|---|---|---|
| | | Non-Fuel | FPPCAC Revenue | Total |
| 39 | 1A/1B - Residential | $143,243,687 | -$38,647,846 | **$104,595,841** |
| 40 | 2A/2B - Small Power | $30,485,091 | -$10,902,740 | **$19,582,352** |
| 41 | 3B - General Power | $33,545,558 | -$16,281,497 | **$17,264,061** |
| 42 | 3C - General Power (Low Load Factor) | $10,139,408 | -$4,092,858 | **$6,046,549** |
| 43 | 3D - Municipalities and Counties General Power | $2,370,248 | -$1,241,927 | **$1,128,322** |
| 44 | 3E - Municipalities and Counties General Power (Low Load Factor) | $627,320 | -$261,379 | **$365,941** |
| 45 | 3F - Non-Residential Charging Station | $314,881 | -$113,635 | **$201,246** |
| 46 | 4B - Large Power | $18,281,903 | -$11,237,552 | **$7,044,351** |
| 47 | 5B - Large Service for Customers >=8,000kW | $0 | $0 | **$0** |
| 48 | 10A/10B - Irrigation | $683,460 | -$278,900 | **$404,560** |
| 49 | 11B - Water/Sewage Pumping | $2,686,351 | -$1,874,165 | **$812,186** |
| 50 | 15B - Universities 115kV | $1,160,111 | -$814,293 | **$345,819** |
| 51 | 30B - Manufacturing (30 MW) | $8,730,778 | -$8,161,152 | **$569,627** |
| 52 | 33B - Station Service | $364,298 | -$118,562 | **$245,736** |
| 53 | 35B - Large Power >=3,000kW | $3,893,071 | -$3,406,108 | **$486,963** |
| 54 | 36B - Special Service - Renew. Energy Resources | $27,345,397 | -$14,558,144 | **$12,787,253** |
| 55 | 6 - Private Lighting | $671,033 | -$130,190 | **$540,843** |
| 56 | 20 - Streetlighting | $1,785,912 | -$347,863 | **$1,438,050** |
| 57 | Tariff Class Totals | $286,328,508 | -$112,468,809 | **$173,859,698** |

| Line No. | Consolidated Tariff Class | Total Revenue Deficiency % | | |
|---|---|---|---|---|
| | | Non-Fuel | FPPCAC Revenue | Total |
| 58 | 1A/1B - Residential | 30.97% | -45.46% | **19.10%** |
| 59 | 2A/2B - Small Power | 27.24% | -45.46% | **14.41%** |
| 60 | 3B - General Power | 27.24% | -45.46% | **10.86%** |
| 61 | 3C - General Power (Low Load Factor) | 27.24% | -45.46% | **13.08%** |
| 62 | 3D - Municipalities and Counties General Power | 27.54% | -45.46% | **9.95%** |
| 63 | 3E - Municipalities and Counties General Power (Low Load Factor) | 27.24% | -45.46% | **12.72%** |
| 64 | 3F - Non-Residential Charging Station | 33.43% | -45.46% | **16.89%** |
| 65 | 4B - Large Power | 27.24% | -45.66% | **7.68%** |
| 66 | 5B - Large Service for Customers >=8,000kW | 0.00% | 0.00% | **0.00%** |
| 67 | 10A/10B - Irrigation | 30.26% | -45.46% | **14.08%** |
| 68 | 11B - Water/Sewage Pumping | 33.43% | -45.66% | **6.69%** |
| 69 | 15B - Universities 115kV | 27.24% | -46.02% | **5.74%** |
| 70 | 30B - Manufacturing (30 MW) | 27.24% | -45.93% | **1.14%** |
| 71 | 33B - Station Service | 27.24% | -46.02% | **15.41%** |
| 72 | 35B - Large Power >=3,000kW | 27.24% | -45.93% | **2.24%** |
| 73 | 36B - Special Service - Renew. Energy Resources | 47.01% | -46.02% | **14.24%** |
| 74 | 6 - Private Lighting | 27.24% | -45.46% | **19.67%** |
| 75 | 20 - Streetlighting | 32.83% | -45.46% | **23.18%** |
| 80 | Tariff Class Totals | 30.39% | -45.61% | **14.63%** |

This schedule is sponsored by PNM witness Larkin

# PNM Schedule A-3

Summary of the cost of service adjustments by functional classification

| | A | B |
|---|---|---|
| 1 | **Public Service Company of New Mexico** | |
| 2 | **Schedule A-3** | |
| 3 | **Summary of the Cost-of-Service Adjustments by Functional Classification** | |
| 4 | **Base Period Ending 6/30/2026** | |
| 5 | **Test Period Ending 9/30/2028** | |
| 6 | **This schedule is sponsored by PNM Witness Gutierrez** | |
| 7 | **Description** | **Total Company Base Period** |
| 8 | | |
| 9 | Operations and Maintenance Expense | |
| 10 | Production | |
| 11 | Fuel (FPPCAC), Net of Off-System Sales | 223,905,330 |
| 12 | Non-Base Fuel and Production Expense | 333,350,801 |
| 13 | Total Production | 557,256,130 |
| 14 | Battery Storage | 81,288 |
| 15 | Transmission | 56,122,837 |
| 16 | Distribution | 37,468,475 |
| 17 | Customer Related | 32,154,814 |
| 18 | Administrative & General | 269,002,091 |
| 19 | Total Non-Fuel O&M Expense | 728,180,306 |
| 20 | Total O&M Expense | 952,085,636 |
| 21 | | |
| 22 | Depreciation and Amortization Expense | |
| 23 | Production | 62,672,434 |
| 24 | Battery Storage | 1,036,086 |
| 25 | Transmission | 65,949,924 |
| 26 | Distribution | 81,883,979 |
| 27 | General & Intangible | 9,902,007 |
| 28 | Total Depreciation and Amortization Expense | 221,444,430 |
| 29 | | |

| | A | B |
|---|---|---|
| 1 | **Public Service Company of New Mexico** | |
| 2 | **Schedule A-3** | |
| 3 | **Summary of the Cost-of-Service Adjustments by Functional Classification** | |
| 4 | **Base Period Ending 6/30/2026** | |
| 5 | **Test Period Ending 9/30/2028** | |
| 6 | **This schedule is sponsored by PNM Witness Gutierrez** | |
| 7 | **Description** | **Total Company Base Period** |
| 30 | Taxes Other Than Income Taxes | |
| 31 | Property | |
| 32 | Production | 12,913,891 |
| 33 | Battery Storage | 245,100 |
| 34 | Transmission | 15,022,198 |
| 35 | Distribution | 14,144,403 |
| 36 | General & Intangible | 1,073,892 |
| 37 | Payroll | |
| 38 | Production | 873,755 |
| 39 | Transmission | (55,795) |
| 40 | Distribution | 3,429,431 |
| 41 | Miscellaneous | |
| 42 | Production | 3,719,061 |
| 43 | Transmission | 2,274,233 |
| 44 | Distribution | 6,724,475 |
| 45 | Total Taxes Other Than Income Taxes | 60,364,644 |
| 46 | | |
| 47 | Other Allowable Expenses | |
| 48 | Production | 16,533,227 |
| 49 | Battery Storage | - |
| 50 | Transmission | 2,784,726 |
| 51 | Distribution | 12,569,644 |
| 52 | Total Other Allowable Expenses | 31,887,597 |
| 53 | | |
| 54 | Allowable Federal Income Tax | 30,296,865 |
| 55 | | |
| 56 | Allowable State Income Tax | 15,618,199 |
| 57 | | |
| 58 | Return on Rate Base | 338,547,366 |
| 59 | | |
| 60 | Revenue Credits | |
| 61 | Production | (13,053,784) |
| 62 | Battery Storage | - |
| 63 | Transmission | (11,092,009) |
| 64 | Distribution | (22,013,187) |
| 65 | | - |
| 66 | Total Revenue Credits | (46,158,980) |
| 67 | | |
| 68 | Total Revenue Tax | 9,464,106 |

| | A | C |
|---|---|---|
| 1 | **Public Service Company of New Mexico** | |
| 2 | **Schedule A-3** | |
| 3 | **Summary of the Cost-of-Service Adjustments by Functional Classification** | |
| 4 | **Base Period Ending 6/30/2026** | |
| 5 | **Test Period Ending 9/30/2028** | |
| 6 | **This schedule is sponsored by PNM Witness Gutierrez** | |
| 7 | **Description** | **Total Company Base Period Adjustments** |
| 8 | | |
| 9 | Operations and Maintenance Expense | |
| 10 | Production | |
| 11 | Fuel (FPPCAC), Net of Off-System Sales | (38,902,755) |
| 12 | Non-Base Fuel and Production Expense | (117,401,349) |
| 13 | Total Production | (156,304,104) |
| 14 | Battery Storage | (1,117) |
| 15 | Transmission | 9,482,419 |
| 16 | Distribution | 2,406,144 |
| 17 | Customer Related | 668,210 |
| 18 | Administrative & General | (166,343,249) |
| 19 | Total Non-Fuel O&M Expense | (271,188,943) |
| 20 | Total O&M Expense | (310,091,698) |
| 21 | | |
| 22 | Depreciation and Amortization Expense | |
| 23 | Production | 1,964,127 |
| 24 | Battery Storage | 4,874,009 |
| 25 | Transmission | 484,849 |
| 26 | Distribution | 6,294,554 |
| 27 | General & Intangible | 37,055,607 |
| 28 | Total Depreciation and Amortization Expense | 50,673,146 |
| 29 | | |

| | A | C |
|---|---|---|
| 1 | **Public Service Company of New Mexico** | |
| 2 | **Schedule A-3** | |
| 3 | **Summary of the Cost-of-Service Adjustments by Functional Classification** | |
| 4 | **Base Period Ending 6/30/2026** | |
| 5 | **Test Period Ending 9/30/2028** | |
| 6 | **This schedule is sponsored by PNM Witness Gutierrez** | |
| 7 | **Description** | **Total Company Base Period Adjustments** |
| 30 | Taxes Other Than Income Taxes | |
| 31 | Property | |
| 32 | Production | - |
| 33 | Battery Storage | - |
| 34 | Transmission | - |
| 35 | Distribution | - |
| 36 | General & Intangible | 1,151,926 |
| 37 | Payroll | |
| 38 | Production | 651,517 |
| 39 | Transmission | 1,130,637 |
| 40 | Distribution | 1,385,576 |
| 41 | Miscellaneous | |
| 42 | Production | (83,326) |
| 43 | Transmission | (12,424) |
| 44 | Distribution | (6,641,249) |
| 45 | Total Taxes Other Than Income Taxes | (2,417,344) |
| 46 | | |
| 47 | Other Allowable Expenses | |
| 48 | Production | (8,267,535) |
| 49 | Battery Storage | - |
| 50 | Transmission | - |
| 51 | Distribution | - |
| 52 | Total Other Allowable Expenses | (8,267,535) |
| 53 | | |
| 54 | Allowable Federal Income Tax | (4,950,221) |
| 55 | | |
| 56 | Allowable State Income Tax | (1,390,776) |
| 57 | | |
| 58 | Return on Rate Base | (26,039,415) |
| 59 | | |
| 60 | Revenue Credits | |
| 61 | Production | 10,359,694 |
| 62 | Battery Storage | - |
| 63 | Transmission | 3,957,287 |
| 64 | Distribution | (1,694,348) |
| 65 | | - |
| 66 | Total Revenue Credits | 12,622,633 |
| 67 | | |
| 68 | Total Revenue Tax | (1,710,181) |

| | A | D |
|---|---|---|
| 1 | **Public Service Company of New Mexico** | |
| 2 | **Schedule A-3** | |
| 3 | **Summary of the Cost-of-Service Adjustments by Functional Classification** | |
| 4 | **Base Period Ending 6/30/2026** | |
| 5 | **Test Period Ending 9/30/2028** | |
| 6 | **This schedule is sponsored by PNM Witness Gutierrez** | |
| 7 | **Description** | **Total Company Adjusted Base** |
| 8 | | |
| 9 | Operations and Maintenance Expense | |
| 10 | Production | |
| 11 | Fuel (FPPCAC), Net of Off-System Sales | 185,002,575 |
| 12 | Non-Base Fuel and Production Expense | 215,949,452 |
| 13 | Total Production | 400,952,026 |
| 14 | Battery Storage | 80,171 |
| 15 | Transmission | 65,605,256 |
| 16 | Distribution | 39,874,619 |
| 17 | Customer Related | 32,823,024 |
| 18 | Administrative & General | 102,658,842 |
| 19 | Total Non-Fuel O&M Expense | 456,991,363 |
| 20 | Total O&M Expense | 641,993,938 |
| 21 | | |
| 22 | Depreciation and Amortization Expense | |
| 23 | Production | 64,636,561 |
| 24 | Battery Storage | 5,910,095 |
| 25 | Transmission | 66,434,773 |
| 26 | Distribution | 88,178,533 |
| 27 | General & Intangible | 46,957,614 |
| 28 | Total Depreciation and Amortization Expense | 272,117,576 |
| 29 | | |

| | A | D |
|---|---|---|
| 1 | **Public Service Company of New Mexico** | |
| 2 | **Schedule A-3** | |
| 3 | **Summary of the Cost-of-Service Adjustments by Functional Classification** | |
| 4 | **Base Period Ending 6/30/2026** | |
| 5 | **Test Period Ending 9/30/2028** | |
| 6 | **This schedule is sponsored by PNM Witness Gutierrez** | |
| 7 | **Description** | **Total Company Adjusted Base** |
| 30 | Taxes Other Than Income Taxes | |
| 31 | Property | |
| 32 | Production | 12,913,891 |
| 33 | Battery Storage | 245,100 |
| 34 | Transmission | 15,022,198 |
| 35 | Distribution | 14,144,403 |
| 36 | General & Intangible | 2,225,817 |
| 37 | Payroll | |
| 38 | Production | 1,525,272 |
| 39 | Transmission | 1,074,842 |
| 40 | Distribution | 4,815,007 |
| 41 | Miscellaneous | |
| 42 | Production | 3,635,734 |
| 43 | Transmission | 2,261,809 |
| 44 | Distribution | 83,226 |
| 45 | Total Taxes Other Than Income Taxes | 57,947,300 |
| 46 | | |
| 47 | Other Allowable Expenses | |
| 48 | Production | 8,265,692 |
| 49 | Battery Storage | - |
| 50 | Transmission | 2,784,726 |
| 51 | Distribution | 12,569,644 |
| 52 | Total Other Allowable Expenses | 23,620,062 |
| 53 | | |
| 54 | Allowable Federal Income Tax | 25,346,644 |
| 55 | | |
| 56 | Allowable State Income Tax | 14,227,423 |
| 57 | | |
| 58 | Return on Rate Base | 312,507,951 |
| 59 | | |
| 60 | Revenue Credits | |
| 61 | Production | (2,694,090) |
| 62 | Battery Storage | - |
| 63 | Transmission | (7,134,722) |
| 64 | Distribution | (23,707,535) |
| 65 | | - |
| 66 | Total Revenue Credits | (33,536,347) |
| 67 | | |
| 68 | Total Revenue Tax | 7,753,925 |

| | A | E |
|---|---|---|
| 1 | **Public Service Company of New Mexico** | |
| 2 | **Schedule A-3** | |
| 3 | **Summary of the Cost-of-Service Adjustments by Functional Classification** | |
| 4 | **Base Period Ending 6/30/2026** | |
| 5 | **Test Period Ending 9/30/2028** | |
| 6 | **This schedule is sponsored by PNM Witness Gutierrez** | |
| 7 | **Description** | **Adjustments from Base to Test Period** |
| 8 | | |
| 9 | Operations and Maintenance Expense | |
| 10 | Production | |
| 11 | Fuel (FPPCAC), Net of Off-System Sales | (17,308,701) |
| 12 | Non-Base Fuel and Production Expense | 61,110,446 |
| 13 | Total Production | 43,801,745 |
| 14 | Battery Storage | 1,723,042 |
| 15 | Transmission | 8,384,412 |
| 16 | Distribution | 32,081,561 |
| 17 | Customer Related | 5,397,196 |
| 18 | Administrative & General | 15,586,607 |
| 19 | Total Non-Fuel O&M Expense | 124,283,263 |
| 20 | Total O&M Expense | 106,974,562 |
| 21 | | |
| 22 | Depreciation and Amortization Expense | |
| 23 | Production | 6,279,306 |
| 24 | Battery Storage | 11,467,414 |
| 25 | Transmission | 5,051,192 |
| 26 | Distribution | 29,919,865 |
| 27 | General & Intangible | (5,743,813) |
| 28 | Total Depreciation and Amortization Expense | 46,973,965 |
| 29 | | |

| | A | E |
|---|---|---|
| 1 | **Public Service Company of New Mexico** | |
| 2 | **Schedule A-3** | |
| 3 | **Summary of the Cost-of-Service Adjustments by Functional Classification** | |
| 4 | **Base Period Ending 6/30/2026** | |
| 5 | **Test Period Ending 9/30/2028** | |
| 6 | **This schedule is sponsored by PNM Witness Gutierrez** | |
| 7 | **Description** | **Adjustments from Base to Test Period** |
| 30 | Taxes Other Than Income Taxes | |
| 31 | Property | |
| 32 | Production | (212,454) |
| 33 | Battery Storage | 2,535,680 |
| 34 | Transmission | 878,483 |
| 35 | Distribution | 4,859,033 |
| 36 | General & Intangible | (68,444) |
| 37 | Payroll | |
| 38 | Production | 208,132 |
| 39 | Transmission | 227,805 |
| 40 | Distribution | 1,232,941 |
| 41 | Miscellaneous | |
| 42 | Production | 296,676 |
| 43 | Transmission | 184,564 |
| 44 | Distribution | 6,791 |
| 45 | Total Taxes Other Than Income Taxes | 10,149,207 |
| 46 | | |
| 47 | Other Allowable Expenses | |
| 48 | Production | (974,876) |
| 49 | Battery Storage | - |
| 50 | Transmission | 200,579 |
| 51 | Distribution | 9,863,011 |
| 52 | Total Other Allowable Expenses | 9,088,714 |
| 53 | | |
| 54 | Allowable Federal Income Tax | 7,466,801 |
| 55 | | |
| 56 | Allowable State Income Tax | 2,401,820 |
| 57 | | |
| 58 | Return on Rate Base | 87,161,901 |
| 59 | | |
| 60 | Revenue Credits | |
| 61 | Production | (164,070) |
| 62 | Battery Storage | - |
| 63 | Transmission | (434,505) |
| 64 | Distribution | 4,908,468 |
| 65 | | - |
| 66 | Total Revenue Credits | 4,309,893 |
| 67 | | |
| 68 | Total Revenue Tax | 1,618,401 |

| | A | F |
|---|---|---|
| 1 | **Public Service Company of New Mexico** | |
| 2 | **Schedule A-3** | |
| 3 | **Summary of the Cost-of-Service Adjustments by Functional Classification** | |
| 4 | **Base Period Ending 6/30/2026** | |
| 5 | **Test Period Ending 9/30/2028** | |
| 6 | **This schedule is sponsored by PNM Witness Gutierrez** | |
| 7 | **Description** | **Total Company Test Period** |
| 8 | | |
| 9 | Operations and Maintenance Expense | |
| 10 | Production | |
| 11 | Fuel (FPPCAC), Net of Off-System Sales | 167,693,874 |
| 12 | Non-Base Fuel and Production Expense | 277,059,897 |
| 13 | Total Production | 444,753,771 |
| 14 | Battery Storage | 1,803,213 |
| 15 | Transmission | 73,989,667 |
| 16 | Distribution | 71,956,180 |
| 17 | Customer Related | 38,220,220 |
| 18 | Administrative & General | 118,245,449 |
| 19 | Total Non-Fuel O&M Expense | 581,274,626 |
| 20 | Total O&M Expense | 748,968,500 |
| 21 | | |
| 22 | Depreciation and Amortization Expense | |
| 23 | Production | 70,915,867 |
| 24 | Battery Storage | 17,377,509 |
| 25 | Transmission | 71,485,965 |
| 26 | Distribution | 118,098,399 |
| 27 | General & Intangible | 41,213,801 |
| 28 | Total Depreciation and Amortization Expense | 319,091,540 |
| 29 | | |

| | A | F |
|---|---|---|
| 1 | **Public Service Company of New Mexico** | |
| 2 | **Schedule A-3** | |
| 3 | **Summary of the Cost-of-Service Adjustments by Functional Classification** | |
| 4 | **Base Period Ending 6/30/2026** | |
| 5 | **Test Period Ending 9/30/2028** | |
| 6 | **This schedule is sponsored by PNM Witness Gutierrez** | |
| 7 | **Description** | **Total Company Test Period** |
| 30 | Taxes Other Than Income Taxes | |
| 31 | Property | |
| 32 | Production | 12,701,436 |
| 33 | Battery Storage | 2,780,780 |
| 34 | Transmission | 15,900,681 |
| 35 | Distribution | 19,003,437 |
| 36 | General & Intangible | 2,157,373 |
| 37 | Payroll | |
| 38 | Production | 1,733,404 |
| 39 | Transmission | 1,302,648 |
| 40 | Distribution | 6,047,948 |
| 41 | Miscellaneous | |
| 42 | Production | 3,932,410 |
| 43 | Transmission | 2,446,373 |
| 44 | Distribution | 90,018 |
| 45 | Total Taxes Other Than Income Taxes | 68,096,507 |
| 46 | | |
| 47 | Other Allowable Expenses | |
| 48 | Production | 7,290,816 |
| 49 | Battery Storage | - |
| 50 | Transmission | 2,985,305 |
| 51 | Distribution | 22,432,655 |
| 52 | Total Other Allowable Expenses | 32,708,776 |
| 53 | | |
| 54 | Allowable Federal Income Tax | 32,813,444 |
| 55 | | |
| 56 | Allowable State Income Tax | 16,629,242 |
| 57 | | |
| 58 | Return on Rate Base | 399,669,852 |
| 59 | | |
| 60 | Revenue Credits | |
| 61 | Production | (2,858,160) |
| 62 | Battery Storage | - |
| 63 | Transmission | (7,569,227) |
| 64 | Distribution | (18,799,067) |
| 65 | | (221,600) |
| 66 | Total Revenue Credits | (29,448,053) |
| 67 | | |
| 68 | Total Revenue Tax | 9,372,326 |

| | A | G |
|---|---|---|
| 1 | **Public Service Company of New Mexico** | |
| 2 | **Schedule A-3** | |
| 3 | **Summary of the Cost-of-Service Adjustments by Functional Classification** | |
| 4 | **Base Period Ending 6/30/2026** | |
| 5 | **Test Period Ending 9/30/2028** | |
| 6 | **This schedule is sponsored by PNM Witness Gutierrez** | |
| 7 | **Description** | **PNM Base Rate Adjusted Base Period** |
| 8 | | |
| 9 | Operations and Maintenance Expense | |
| 10 | Production | |
| 11 | Fuel (FPPCAC), Net of Off-System Sales | 148,907,711 |
| 12 | Non-Base Fuel and Production Expense | 209,823,665 |
| 13 | Total Production | 358,731,376 |
| 14 | Battery Storage | 80,171 |
| 15 | Transmission | 48,936,513 |
| 16 | Distribution | 39,874,619 |
| 17 | Customer Related | 32,823,024 |
| 18 | Administrative & General | 93,466,050 |
| 19 | Total Non-Fuel O&M Expense | 425,004,042 |
| 20 | Total O&M Expense | 573,911,753 |
| 21 | | |
| 22 | Depreciation and Amortization Expense | |
| 23 | Production | 56,267,387 |
| 24 | Battery Storage | 5,910,095 |
| 25 | Transmission | 27,360,377 |
| 26 | Distribution | 88,178,533 |
| 27 | General & Intangible | 43,626,418 |
| 28 | Total Depreciation and Amortization Expense | 221,342,810 |
| 29 | | |

| | A | G |
|---|---|---|
| 1 | **Public Service Company of New Mexico** | |
| 2 | **Schedule A-3** | |
| 3 | **Summary of the Cost-of-Service Adjustments by Functional Classification** | |
| 4 | **Base Period Ending 6/30/2026** | |
| 5 | **Test Period Ending 9/30/2028** | |
| 6 | **This schedule is sponsored by PNM Witness Gutierrez** | |
| 7 | **Description** | **PNM Base Rate Adjusted Base Period** |
| 30 | Taxes Other Than Income Taxes | |
| 31 | Property | |
| 32 | Production | 11,427,194 |
| 33 | Battery Storage | 245,100 |
| 34 | Transmission | 5,650,054 |
| 35 | Distribution | 14,110,967 |
| 36 | General & Intangible | 2,017,495 |
| 37 | Payroll | |
| 38 | Production | 1,471,369 |
| 39 | Transmission | 501,276 |
| 40 | Distribution | 4,815,007 |
| 41 | Miscellaneous | |
| 42 | Production | 3,635,734 |
| 43 | Transmission | 865,280 |
| 44 | Distribution | 83,226 |
| 45 | Total Taxes Other Than Income Taxes | 44,822,703 |
| 46 | | |
| 47 | Other Allowable Expenses | |
| 48 | Production | 9,412,156 |
| 49 | Battery Storage | - |
| 50 | Transmission | - |
| 51 | Distribution | 12,290,434 |
| 52 | Total Other Allowable Expenses | 21,702,590 |
| 53 | | |
| 54 | Allowable Federal Income Tax | 18,041,491 |
| 55 | | |
| 56 | Allowable State Income Tax | 10,798,856 |
| 57 | | |
| 58 | Return on Rate Base | 241,790,420 |
| 59 | | |
| 60 | Revenue Credits | |
| 61 | Production | (2,694,090) |
| 62 | Battery Storage | - |
| 63 | Transmission | (1,351,803) |
| 64 | Distribution | (23,707,535) |
| 65 | | - |
| 66 | Total Revenue Credits | (27,753,428) |
| 67 | | |
| 68 | Total Revenue Tax | 6,517,477 |

| | A | H |
|---|---|---|
| 1 | **Public Service Company of New Mexico** | |
| 2 | **Schedule A-3** | |
| 3 | **Summary of the Cost-of-Service Adjustments by Functional Classification** | |
| 4 | **Base Period Ending 6/30/2026** | |
| 5 | **Test Period Ending 9/30/2028** | |
| 6 | **This schedule is sponsored by PNM Witness Gutierrez** | |
| 7 | **Description** | **PNM Base Rate Test Period** |
| 8 | | |
| 9 | Operations and Maintenance Expense | |
| 10 | Production | |
| 11 | Fuel (FPPCAC), Net of Off-System Sales | 134,138,322 |
| 12 | Non-Base Fuel and Production Expense | 271,673,955 |
| 13 | Total Production | 405,812,277 |
| 14 | Battery Storage | 1,803,213 |
| 15 | Transmission | 53,401,457 |
| 16 | Distribution | 71,956,180 |
| 17 | Customer Related | 38,220,220 |
| 18 | Administrative & General | 107,930,133 |
| 19 | Total Non-Fuel O&M Expense | 544,985,157 |
| 20 | Total O&M Expense | 679,123,479 |
| 21 | | |
| 22 | Depreciation and Amortization Expense | |
| 23 | Production | 62,326,377 |
| 24 | Battery Storage | 17,377,509 |
| 25 | Transmission | 28,812,369 |
| 26 | Distribution | 118,098,399 |
| 27 | General & Intangible | 38,251,796 |
| 28 | Total Depreciation and Amortization Expense | 264,866,450 |
| 29 | | |

| | A | H |
|---|---|---|
| 1 | **Public Service Company of New Mexico** | |
| 2 | **Schedule A-3** | |
| 3 | **Summary of the Cost-of-Service Adjustments by Functional Classification** | |
| 4 | **Base Period Ending 6/30/2026** | |
| 5 | **Test Period Ending 9/30/2028** | |
| 6 | **This schedule is sponsored by PNM Witness Gutierrez** | |
| 7 | **Description** | **PNM Base Rate Test Period** |
| 30 | Taxes Other Than Income Taxes | |
| 31 | Property | |
| 32 | Production | 9,962,369 |
| 33 | Battery Storage | 2,780,780 |
| 34 | Transmission | 5,998,601 |
| 35 | Distribution | 19,003,437 |
| 36 | General & Intangible | 2,005,555 |
| 37 | Payroll | |
| 38 | Production | 1,692,248 |
| 39 | Transmission | 585,790 |
| 40 | Distribution | 6,047,948 |
| 41 | Miscellaneous | |
| 42 | Production | 3,932,410 |
| 43 | Transmission | 926,272 |
| 44 | Distribution | 90,018 |
| 45 | Total Taxes Other Than Income Taxes | 53,025,427 |
| 46 | | |
| 47 | Other Allowable Expenses | |
| 48 | Production | 8,437,279 |
| 49 | Battery Storage | - |
| 50 | Transmission | 343,559 |
| 51 | Distribution | 22,176,344 |
| 52 | Total Other Allowable Expenses | 30,957,182 |
| 53 | | |
| 54 | Allowable Federal Income Tax | 20,700,426 |
| 55 | | |
| 56 | Allowable State Income Tax | 12,547,376 |
| 57 | | |
| 58 | Return on Rate Base | 316,615,179 |
| 59 | | |
| 60 | Revenue Credits | |
| 61 | Production | (2,858,160) |
| 62 | Battery Storage | - |
| 63 | Transmission | (1,387,382) |
| 64 | Distribution | (19,005,558) |
| 65 | | - |
| 66 | Total Revenue Credits | (23,251,100) |
| 67 | | |
| 68 | Total Revenue Tax | 7,992,048 |

| | A | I |
|---|---|---|
| 1 | **Public Service Company of New Mexico** | |
| 2 | **Schedule A-3** | |
| 3 | **Summary of the Cost-of-Service Adjustments by Functional Classification** | |
| 4 | **Base Period Ending 6/30/2026** | |
| 5 | **Test Period Ending 9/30/2028** | |
| 6 | **This schedule is sponsored by PNM Witness Gutierrez** | |
| 7 | **Description** | **Reference See Notes** |
| 8 | | |
| 9 | Operations and Maintenance Expense | |
| 10 | Production | |
| 11 | Fuel (FPPCAC), Net of Off-System Sales | |
| 12 | Non-Base Fuel and Production Expense | |
| 13 | Total Production | |
| 14 | Battery Storage | |
| 15 | Transmission | |
| 16 | Distribution | |
| 17 | Customer Related | |
| 18 | Administrative & General | |
| 19 | Total Non-Fuel O&M Expense | |
| 20 | Total O&M Expense | |
| 21 | | |
| 22 | Depreciation and Amortization Expense | |
| 23 | Production | |
| 24 | Battery Storage | |
| 25 | Transmission | |
| 26 | Distribution | |
| 27 | General & Intangible | |
| 28 | Total Depreciation and Amortization Expense | |
| 29 | | |

| | A | I |
|---|---|---|
| 1 | **Public Service Company of New Mexico** | |
| 2 | **Schedule A-3** | |
| 3 | **Summary of the Cost-of-Service Adjustments by Functional Classification** | |
| 4 | **Base Period Ending 6/30/2026** | |
| 5 | **Test Period Ending 9/30/2028** | |
| 6 | **This schedule is sponsored by PNM Witness Gutierrez** | |
| 7 | **Description** | **Reference See Notes** |
| 30 | Taxes Other Than Income Taxes | |
| 31 | Property | |
| 32 | Production | |
| 33 | Battery Storage | |
| 34 | Transmission | |
| 35 | Distribution | |
| 36 | General & Intangible | |
| 37 | Payroll | |
| 38 | Production | |
| 39 | Transmission | |
| 40 | Distribution | |
| 41 | Miscellaneous | |
| 42 | Production | |
| 43 | Transmission | |
| 44 | Distribution | |
| 45 | Total Taxes Other Than Income Taxes | |
| 46 | | |
| 47 | Other Allowable Expenses | |
| 48 | Production | |
| 49 | Battery Storage | |
| 50 | Transmission | |
| 51 | Distribution | |
| 52 | Total Other Allowable Expenses | |
| 53 | | |
| 54 | Allowable Federal Income Tax | |
| 55 | | |
| 56 | Allowable State Income Tax | |
| 57 | | |
| 58 | Return on Rate Base | |
| 59 | | |
| 60 | Revenue Credits | |
| 61 | Production | |
| 62 | Battery Storage | |
| 63 | Transmission | |
| 64 | Distribution | |
| 65 | | |
| 66 | Total Revenue Credits | |
| 67 | | |
| 68 | Total Revenue Tax | |

| | A |
|---|---|
| 1 | **Public Service Company of New Mexico** |
| 2 | **Schedule A-3** |
| 3 | **Summary of the Cost-of-Service Adjustments by Functional Classification (Notes)** |
| 4 | **Base Period Ending 6/30/2026** |
| 5 | **Test Period Ending 9/30/2028** |
| 6 | **This schedule is sponsored by PNM Witness Gutierrez** |
| 7 | |
| 8 | Column B - Please refer to PNM Exhibit RNG-3 COS Base Adj, Column F |
| 9 | Column D - Please refer to PNM Exhibit RNG-3 COS BASE, Column G |
| 10 | Column F - Please refer to PNM Exhibit RNG-3 COS Test, Column I |
| 11 | Column G - Please refer to PNM Exhibit RNG-3 COS BASE, Column J |
| 12 | Column H - Please refer to PNM Exhibit RNG-3 COS Test, Column L |
| 13 | Base period data is historical information from the Company's Book Balance Amounts |
| 14 | Please see Schedule A-4 for Rate Base Adjustments by Functional Classification |
| 15 | Please refer to PNM Exhibit RNG-4 and the testimony of PNM Witness Gutierrez for further discussion |
| 16 | of base period adjustments and adjustments from adjusted base period to test period. |
| 17 | Please see Schedules K-2 and K-6 for PNM Retail functionalization of Rate Base, Income Tax, Return on Rate base |
| 18 | and Revenue Tax |

# PNM Schedule A-4

Summary of Rate Base

| | A | B | C | D |
|---|---|---|---|---|
| 1 | **Public Service Company of New Mexico** | | | |
| 2 | **Schedule A-4** | | | |
| 3 | **Summary of Rate Base** | | | |
| 4 | **Base Period Ending 6/30/2026** | | | |
| 5 | **Test Period Ending 9/30/2028** | | | |
| 6 | **This schedule is sponsored by PNM Witness Gutierrez** | | | |
| 7 | **Description** | **Total Company Base Period** | **Total Company Base Period Adjustments** | **Total Company Adjusted Base** |
| 8 | | | | |
| 9 | Net Plant In Service | | | |
| 10 | Production | 1,291,777,504 | (87,679,204) | 1,204,098,300 |
| 11 | Battery Storage | 149,784,952 | - | 149,784,952 |
| 12 | Transmission | 1,684,591,358 | (1,042,150) | 1,683,549,209 |
| 13 | Distribution | 1,736,502,350 | - | 1,736,502,350 |
| 14 | General & Intangible | 87,867,736 | 120,064,287 | 207,932,023 |
| 15 | Total Net Plant In Service | 4,950,523,901 | 31,342,933 | 4,981,866,834 |
| 16 | | | | |
| 17 | ADIT | (734,813,633) | (104,629,108) | (839,442,741) |
| 18 | | | | |
| 19 | Regulatory Assets & Liabilities | 30,862,036 | (103,540,211) | (72,678,175) |
| 20 | | | | |
| 21 | Other Rate Base Items | 326,798,542 | (189,535,661) | 137,262,881 |
| 22 | | | | |
| 23 | Working Capital | | | |
| 24 | Fuel Stock | 78,937,059 | (1,409,245) | 77,527,814 |
| 25 | Materials & Supplies | 142,233,663 | (525,231) | 141,708,432 |
| 26 | Prepayments | 22,033,843 | (1,929,396) | 20,104,447 |
| 27 | Cash Working Capital | 2,945,502 | - | 2,945,502 |
| 28 | Total Working Capital | 246,150,068 | (3,863,873) | 242,286,195 |
| 29 | | | | |
| 30 | Total Rate Base | 4,819,520,914 | (370,225,920) | 4,449,294,994 |

| | A | E | F | G |
|---|---|---|---|---|
| 1 | **Public Service Company of New Mexico** | | | |
| 2 | **Schedule A-4** | | | |
| 3 | **Summary of Rate Base** | | | |
| 4 | **Base Period Ending 6/30/2026** | | | |
| 5 | **Test Period Ending 9/30/2028** | | | |
| 6 | **This schedule is sponsored by PNM Witness Gutierrez** | | | |
| 7 | **Description** | **Adjustments from Base to Test Period** | **Total Company Test Period** | **PNM Base Rate Adjusted Base Period** |
| 8 | | | | |
| 9 | Net Plant In Service | | | |
| 10 | Production | 143,809,951 | 1,347,908,252 | 1,044,150,895 |
| 11 | Battery Storage | 159,590,666 | 309,375,619 | 149,784,952 |
| 12 | Transmission | 137,615,590 | 1,821,164,798 | 644,220,534 |
| 13 | Distribution | 435,540,448 | 2,172,042,798 | 1,736,502,350 |
| 14 | General & Intangible | 35,414,369 | 243,346,392 | 193,390,789 |
| 15 | Total Net Plant In Service | 911,971,025 | 5,893,837,858 | 3,768,049,520 |
| 16 | | | | |
| 17 | ADIT | (1,183,592) | (840,626,333) | (665,079,918) |
| 18 | | | | |
| 19 | Regulatory Assets & Liabilities | (16,261,329) | (88,939,504) | (18,801,236) |
| 20 | | | | |
| 21 | Other Rate Base Items | (6,082,827) | 131,180,054 | 137,492,930 |
| 22 | | | | |
| 23 | Working Capital | | | |
| 24 | Fuel Stock | (20,625,702) | 56,902,112 | 77,527,814 |
| 25 | Materials & Supplies | (588,399) | 141,120,033 | 125,370,306 |
| 26 | Prepayments | 408,585 | 20,513,032 | 16,334,951 |
| 27 | Cash Working Capital | 878,079 | 3,823,581 | 2,945,502 |
| 28 | Total Working Capital | (19,927,436) | 222,358,759 | 222,178,573 |
| 29 | | | | |
| 30 | Total Rate Base | 868,515,840 | 5,317,810,834 | 3,443,839,870 |

| | A | H | I |
|---|---|---|---|
| 1 | **Public Service Company of New Mexico** | | |
| 2 | **Schedule A-4** | | |
| 3 | **Summary of Rate Base** | | |
| 4 | **Base Period Ending 6/30/2026** | | |
| 5 | **Test Period Ending 9/30/2028** | | |
| 6 | **This schedule is sponsored by PNM Witness Gutierrez** | | |
| 7 | **Description** | **PNM Base Rate Test Period** | **Reference See Notes** |
| 8 | | | |
| 9 | Net Plant In Service | | |
| 10 | Production | 1,202,629,168 | |
| 11 | Battery Storage | 309,375,619 | |
| 12 | Transmission | 689,695,804 | |
| 13 | Distribution | 2,172,042,798 | |
| 14 | General & Intangible | 226,329,079 | |
| 15 | Total Net Plant In Service | 4,600,072,468 | |
| 16 | | | |
| 17 | ADIT | (665,877,613) | |
| 18 | | | |
| 19 | Regulatory Assets & Liabilities | (44,219,576) | |
| 20 | | | |
| 21 | Other Rate Base Items | 123,498,206 | |
| 22 | | | |
| 23 | Working Capital | | |
| 24 | Fuel Stock | 56,902,112 | |
| 25 | Materials & Supplies | 124,677,506 | |
| 26 | Prepayments | 16,382,615 | |
| 27 | Cash Working Capital | 3,823,581 | |
| 28 | Total Working Capital | 201,785,815 | |
| 29 | | | |
| 30 | Total Rate Base | 4,215,259,299 | |

| | A |
|---|---|
| 1 | **Public Service Company of New Mexico** |
| 2 | **Schedule A-4** |
| 3 | **Summary of Rate Base (Notes)** |
| 4 | **Base Period Ending 6/30/2026** |
| 5 | **Test Period Ending 9/30/2028** |
| 6 | **This schedule is sponsored by PNM Witness Gutierrez** |
| 7 | |
| 8 | Column B - Please refer to PNM Exhibit RNG-3 COS Base Adj, Column F |
| 9 | Column D - Please refer to PNM Exhibit RNG-3 COS BASE, Column G |
| 10 | Column F - Please refer to PNM Exhibit RNG-3 COS Test, Column I |
| 11 | Column G - Please refer to PNM Exhibit RNG-3 COS BASE, Column J |
| 12 | Column H - Please refer to PNM Exhibit RNG-3 COS Test, Column L |
| 13 | Base period data is historical information from the Company's Book Balance Amounts |
| 14 | Please refer to PNM Exhibit RNG-4 and the testimony of PNM Witness Gutierrez for further discussion |
| 15 | of base period adjustments and adjustments from adjusted base period to test period. |

# PNM Schedule A-5

Summary of total capitalization and the weighted average cost of capital

| | A | B | C | D | E | F |
|---|---|---|---|---|---|---|
| 1 | **Public Service Company of New Mexico** | | | | | |
| 2 | **Schedule A-5** | | | | | |
| 3 | **Summary of Total Capitalization and the Weighted Average Cost of Capital** | | | | | |
| 4 | **Base Period Ending June 30th, 2026** | | | | | |
| 5 | | | | | | |
| 6 | **Line No.** | **Capital Component** | **Total Capitalization Base Period** | **Percentage of Total Capitalization** | **Capital Component Cost** | **Weighted Average Cost** |
| 7 | | | | | | |
| 8 | | | | | | |
| 9 | 1 | Long Term Debt | 2,225,345 | 46.65% | 4.29% | 2.00% |
| 10 | | | | | | |
| 11 | 2 | Preferred Stock | 11,529 | 0.24% | 4.62% | 0.01% |
| 12 | | | | | | |
| 13 | 3 | Common Equity | 2,533,502 | 53.11% | 9.450% | 5.02% |
| 14 | | | | | | |
| 15 | 4 | Total | 4,770,377 | 100.00% | | 7.03% |
| 16 | | | | | | |
| 17 | | | | | Tax Rate | 25.40% |
| 18 | | | | | | |
| 19 | | | | | | Tax gross up |
| 20 | | | | | Debt | 2.00% |
| 21 | | | | | Preferred | 0.01% |
| 22 | | | | | Common | 6.73% |
| 23 | | | | | Total | 8.75% |
| 24 | | | | | | |
| 25 | | **Note**: Amounts may not foot due to rounding | | | | |

| | A | B | C | D | E | F |
|---|---|---|---|---|---|---|
| 1 | **Public Service Company of New Mexico** | | | | | |
| 2 | **Schedule A-5** | | | | | |
| 3 | **Summary of Total Capitalization and the Weighted Average Cost of Capital** | | | | | |
| 4 | **Test Period Ending September 30th, 2028** | | | | | |
| 5 | | | | | | |
| 6 | **Line No.** | **Capital Component** | **Total Capitalization Test Period** | **Percentage of Total Capitalization** | **Capital Component Cost** | **Weighted Average Cost** |
| 7 | | | | | | |
| 8 | | | | | | |
| 9 | 1 | Long Term Debt | 2,976,303 | 47.81% | 4.97% | 2.38% |
| 10 | | | | | | |
| 11 | 2 | Preferred Stock | 11,529 | 0.19% | 4.62% | 0.01% |
| 12 | | | | | | |
| 13 | 3 | Common Equity | 3,236,818 | 52.00% | 9.90% | 5.15% |
| 14 | | | | | | |
| 15 | 4 | Total | 6,224,650 | 100.00% | | 7.53% |
| 16 | | | | | | |
| 17 | | | | | Tax Rate | 25.40% |
| 18 | | | | | | |
| 19 | | | | | | Tax gross up |
| 20 | | | | | Debt | 2.38% |
| 21 | | | | | Preferred | 0.01% |
| 22 | | | | | Common | 6.90% |
| 23 | | | | | Total | 9.29% |
| 24 | | | | | | |
| 25 | | **Note**: Amounts may not foot due to rounding | | | | |

Original cost of plant in service

# PNM B Series Schedules

Schedule B-1: Original cost of plant in service by primary account

Schedule B-2: Original cost of plant in service by detail account

Schedule B-3: Original cost of plant in service by monthly balances

Schedule B-4: Construction Work in Progress

Schedule B-5: Allowance for funds used during construction transferred to plant in service

Schedule B-6: Plant held for future use

Schedule B-7: Nuclear fuel in process

# PNM Schedule B-1

Original cost of plant in service by primary account

| | A | B | C | D | E | F |
|---|---|---|---|---|---|---|
| 1 | **Public Service Company of New Mexico** | | | | | |
| 2 | **Schedule B-1** | | | | | |
| 3 | **Original Cost of Plant in Service by Primary Account** | | | | | |
| 4 | **Base Period Ending 6/30/2026** | | | | | |
| 5 | **Test Period Ending 9/30/2028** | | | | | |
| 6 | **This schedule is sponsored by PNM Witness Gutierrez** | | | | | |
| 7 | **Utility Account** | **FERC** | **Base Period Beginning Balance Jul-25** | **Additions** | **Retirements** | **Adjustments** |
| 8 | | | | | | |
| 9 | Electric Plant in Service | 101 | 6,622,365,699 | 493,433,650 | (45,838,312) | - |
| 10 | | | | | | |
| 11 | Electric Plant Purchased | 102 | - | - | - | - |
| 12 | | | | | | |
| 13 | Completed Construction - Not Classified (Note 3) | 106 | 274,210,380 | 118,293,815 | - | - |
| 14 | | | | | | |
| 15 | Electric Plant Acquisition Adjustment | 114 | 17,488,758 | - | - | - |
| 16 | | | | | | |
| 17 | **Total Plant in Service - PNM** | | **6,914,064,837** | **611,727,465** | **(45,838,312)** | **-** |
| 18 | | | | | | |
| 19 | | | | | | |
| 20 | Corporate - Unallocated | | | | | |
| 21 | | | | | | |
| 22 | Electric Plant in Service | 101 | 277,055,178 | 59,699,855 | (26,544,286) | - |
| 23 | | | | | | |
| 24 | Electric Plant Purchased | 102 | - | - | - | - |
| 25 | | | | | | |
| 26 | Completed Construction - Not Classified (Note 3) | 106 | 9,845,503 | 7,152,549 | - | - |
| 27 | | | | | | |
| 28 | Electric Plant Acquisition Adjustment | 114 | - | - | - | - |
| 29 | | | | | | |
| 30 | **Total Corporate Plant in Service** | | **286,900,681** | **66,852,404** | **(26,544,286)** | **-** |
| 31 | | | | | | |

| | A | B | G | H | I | J |
|---|---|---|---|---|---|---|
| 1 | **Public Service Company of New Mexico** | | | | | |
| 2 | **Schedule B-1** | | | | | |
| 3 | **Original Cost of Plant in Service by Primary Account** | | | | | |
| 4 | **Base Period Ending 6/30/2026** | | | | | |
| 5 | **Test Period Ending 9/30/2028** | | | | | |
| 6 | **This schedule is sponsored by PNM Witness Gutierrez** | | | | | |
| 7 | **Utility Account** | **FERC** | **Transfers** | **Other DR/CR Note 1** | **Base Period Ending Balance Jun-26** | **Total Base Period Adjustments Note 2** |
| 8 | | | | | | |
| 9 | Electric Plant in Service | 101 | (2,028,286) | - | 7,067,932,751 | (91,822,421) |
| 10 | | | | | | |
| 11 | Electric Plant Purchased | 102 | - | - | - | |
| 12 | | | | | | |
| 13 | Completed Construction - Not Classified (Note 3) | 106 | - | - | 392,504,195 | |
| 14 | | | | | | |
| 15 | Electric Plant Acquisition Adjustment | 114 | - | (1,125,037) | 16,363,721 | |
| 16 | | | | | | |
| 17 | **Total Plant in Service - PNM** | | **(2,028,286)** | **(1,125,037)** | **7,476,800,667** | **(91,822,421)** |
| 18 | | | | | | |
| 19 | | | | | | |
| 20 | Corporate - Unallocated | | | | | |
| 21 | | | | | | |
| 22 | Electric Plant in Service | 101 | - | - | 310,210,747 | (94,508,872) |
| 23 | | | | | | |
| 24 | Electric Plant Purchased | 102 | - | - | - | |
| 25 | | | | | | |
| 26 | Completed Construction - Not Classified (Note 3) | 106 | - | - | 16,998,052 | |
| 27 | | | | | | |
| 28 | Electric Plant Acquisition Adjustment | 114 | - | - | - | |
| 29 | | | | | | |
| 30 | **Total Corporate Plant in Service** | | **-** | **-** | **327,208,799** | **(94,508,872)** |
| 31 | | | | | | |

| | A | B | K | L | M | N |
|---|---|---|---|---|---|---|
| 1 | **Public Service Company of New Mexico** | | | | | |
| 2 | **Schedule B-1** | | | | | |
| 3 | **Original Cost of Plant in Service by Primary Account** | | | | | |
| 4 | **Base Period Ending 6/30/2026** | | | | | |
| 5 | **Test Period Ending 9/30/2028** | | | | | |
| 6 | **This schedule is sponsored by PNM Witness Gutierrez** | | | | | |
| 7 | **Utility Account** | **FERC** | **Adjusted Base Period Ending Balance Jun-26** | **Reference to PNM Exhibit RNG-4 WP Plant - B-3 - Base, Link, Test** | **Linkage 1 Beginning Balance Jul-26** | **Additions** |
| 8 | | | | | | |
| 9 | Electric Plant in Service | 101 | 6,976,110,330 | | 6,976,110,330 | 630,624,877 |
| 10 | | | | | | |
| 11 | Electric Plant Purchased | 102 | - | | | |
| 12 | | | | | | |
| 13 | Completed Construction - Not Classified (Note 3) | 106 | 392,504,195 | | 392,504,195 | |
| 14 | | | | | | |
| 15 | Electric Plant Acquisition Adjustment | 114 | 16,363,721 | | 16,363,721 | |
| 16 | | | | | | |
| 17 | **Total Plant in Service - PNM** | | **7,384,978,246** | Line 755, Col Y | **7,384,978,246** | **630,624,877** |
| 18 | | | | | | |
| 19 | | | | | | |
| 20 | Corporate - Unallocated | | | | | |
| 21 | | | | | | |
| 22 | Electric Plant in Service | 101 | 215,701,875 | | 327,208,799 | 59,874,211 |
| 23 | | | | | | |
| 24 | Electric Plant Purchased | 102 | - | | | |
| 25 | | | | | | |
| 26 | Completed Construction - Not Classified (Note 3) | 106 | 16,998,052 | | | |
| 27 | | | | | | |
| 28 | Electric Plant Acquisition Adjustment | 114 | - | | | |
| 29 | | | | | | |
| 30 | **Total Corporate Plant in Service** | | **232,699,927** | Line 786, Col Y | **327,208,799** | **59,874,211** |
| 31 | | | | | | |

| | A | B | O | P | Q | R |
|---|---|---|---|---|---|---|
| 1 | **Public Service Company of New Mexico** | | | | | |
| 2 | **Schedule B-1** | | | | | |
| 3 | **Original Cost of Plant in Service by Primary Account** | | | | | |
| 4 | **Base Period Ending 6/30/2026** | | | | | |
| 5 | **Test Period Ending 9/30/2028** | | | | | |
| 6 | **This schedule is sponsored by PNM Witness Gutierrez** | | | | | |
| 7 | **Utility Account** | **FERC** | **Retirements** | **Adjustments** | **Transfers** | **Other DR/CR Note 1** |
| 8 | | | | | | |
| 9 | Electric Plant in Service | 101 | (42,822,539) | | | |
| 10 | | | | | | |
| 11 | Electric Plant Purchased | 102 | | | | |
| 12 | | | | | | |
| 13 | Completed Construction - Not Classified (Note 3) | 106 | | | | |
| 14 | | | | | | |
| 15 | Electric Plant Acquisition Adjustment | 114 | | | | (832,053) |
| 16 | | | | | | |
| 17 | **Total Plant in Service - PNM** | | **(42,822,539)** | **-** | **-** | **(832,053)** |
| 18 | | | | | | |
| 19 | | | | | | |
| 20 | Corporate - Unallocated | | | | | |
| 21 | | | | | | |
| 22 | Electric Plant in Service | 101 | (14,857,896) | | | - |
| 23 | | | | | | |
| 24 | Electric Plant Purchased | 102 | | | | |
| 25 | | | | | | |
| 26 | Completed Construction - Not Classified (Note 3) | 106 | | | | |
| 27 | | | | | | |
| 28 | Electric Plant Acquisition Adjustment | 114 | | | | |
| 29 | | | | | | |
| 30 | **Total Corporate Plant in Service** | | **(14,857,896)** | **-** | **-** | **-** |
| 31 | | | | | | |

| | A | B | S | T | U | V |
|---|---|---|---|---|---|---|
| 1 | **Public Service Company of New Mexico** | | | | | |
| 2 | **Schedule B-1** | | | | | |
| 3 | **Original Cost of Plant in Service by Primary Account** | | | | | |
| 4 | **Base Period Ending 6/30/2026** | | | | | |
| 5 | **Test Period Ending 9/30/2028** | | | | | |
| 6 | **This schedule is sponsored by PNM Witness Gutierrez** | | | | | |
| 7 | **Utility Account** | **FERC** | **Linkage 1 Ending Balance June-27** | **Reference to PNM Exhibit RNG-4 WP Plant - B-3 - Base, Link, Test** | **Linkage 2 Beginning Balance Oct-26** | **Additions** |
| 8 | | | | | | |
| 9 | Electric Plant in Service | 101 | 7,563,912,668 | | 7,463,746,258 | 874,228,015 |
| 10 | | | | | | |
| 11 | Electric Plant Purchased | 102 | - | | | |
| 12 | | | | | | |
| 13 | Completed Construction - Not Classified (Note 3) | 106 | 392,504,195 | | | |
| 14 | | | | | | |
| 15 | Electric Plant Acquisition Adjustment | 114 | 15,531,668 | | 16,155,707 | |
| 16 | | | | | | |
| 17 | **Total Plant in Service - PNM** | | **7,971,948,530** | Line 755, Col AM | **7,479,901,966** | **874,228,015** |
| 18 | | | (1) | | | |
| 19 | | | | | | |
| 20 | Corporate - Unallocated | | | | | |
| 21 | | | | | | |
| 22 | Electric Plant in Service | 101 | 372,225,114 | | 335,846,737 | 60,009,258 |
| 23 | | | | | | |
| 24 | Electric Plant Purchased | 102 | - | | | |
| 25 | | | | | | |
| 26 | Completed Construction - Not Classified (Note 3) | 106 | - | | | |
| 27 | | | | | | |
| 28 | Electric Plant Acquisition Adjustment | 114 | - | | | |
| 29 | | | | | | |
| 30 | **Total Corporate Plant in Service** | | **372,225,114** | Line 786, Col AM | **335,846,737** | **60,009,258** |
| 31 | | | - | | | |

| | A | B | W | X | Y | Z |
|---|---|---|---|---|---|---|
| 1 | **Public Service Company of New Mexico** | | | | | |
| 2 | **Schedule B-1** | | | | | |
| 3 | **Original Cost of Plant in Service by Primary Account** | | | | | |
| 4 | **Base Period Ending 6/30/2026** | | | | | |
| 5 | **Test Period Ending 9/30/2028** | | | | | |
| 6 | **This schedule is sponsored by PNM Witness Gutierrez** | | | | | |
| 7 | **Utility Account** | **FERC** | **Retirements** | **Adjustments** | **Transfers** | **Other DR/CR Note 1** |
| 8 | | | | | | |
| 9 | Electric Plant in Service | 101 | (48,560,260) | | | |
| 10 | | | | | | |
| 11 | Electric Plant Purchased | 102 | | | | |
| 12 | | | | | | |
| 13 | Completed Construction - Not Classified (Note 3) | 106 | | | | |
| 14 | | | | | | |
| 15 | Electric Plant Acquisition Adjustment | 114 | | | | (832,053) |
| 16 | | | | | | |
| 17 | **Total Plant in Service - PNM** | | **(48,560,260)** | **-** | **-** | **(832,053)** |
| 18 | | | | | | |
| 19 | | | | | | |
| 20 | Corporate - Unallocated | | | | | |
| 21 | | | | | | |
| 22 | Electric Plant in Service | 101 | (14,857,896) | | | |
| 23 | | | | | | |
| 24 | Electric Plant Purchased | 102 | | | | |
| 25 | | | | | | |
| 26 | Completed Construction - Not Classified (Note 3) | 106 | | | | |
| 27 | | | | | | |
| 28 | Electric Plant Acquisition Adjustment | 114 | | | | |
| 29 | | | | | | |
| 30 | **Total Corporate Plant in Service** | | **(14,857,896)** | **-** | **-** | **-** |
| 31 | | | | | | |

| | A | B | AA | AB | AC | AD |
|---|---|---|---|---|---|---|
| 1 | **Public Service Company of New Mexico** | | | | | |
| 2 | **Schedule B-1** | | | | | |
| 3 | **Original Cost of Plant in Service by Primary Account** | | | | | |
| 4 | **Base Period Ending 6/30/2026** | | | | | |
| 5 | **Test Period Ending 9/30/2028** | | | | | |
| 6 | **This schedule is sponsored by PNM Witness Gutierrez** | | | | | |
| 7 | **Utility Account** | **FERC** | **Linkage 2 Ending Balance Sept-27** | **Reference to PNM Exhibit RNG-4 WP Plant - B-3 - Base, Link, Test** | **Test Period Beginning Balance Oct-27** | **Additions** |
| 8 | | | | | | |
| 9 | Electric Plant in Service | 101 | 8,289,414,014 | | 8,289,414,014 | 675,736,922 |
| 10 | | | | | | |
| 11 | Electric Plant Purchased | 102 | - | | - | |
| 12 | | | | | | |
| 13 | Completed Construction - Not Classified (Note 3) | 106 | - | | - | |
| 14 | | | | | | |
| 15 | Electric Plant Acquisition Adjustment | 114 | 15,323,654 | | 15,323,654 | |
| 16 | | | | | | |
| 17 | **Total Plant in Service - PNM** | | **8,304,737,668** | Line 755, Col AP | **8,304,737,668** | **675,736,922** |
| 18 | | | - | | | |
| 19 | | | | | | |
| 20 | Corporate - Unallocated | | | | | |
| 21 | | | | | | |
| 22 | Electric Plant in Service | 101 | 380,998,099 | | 380,998,099 | 74,673,611 |
| 23 | | | | | | |
| 24 | Electric Plant Purchased | 102 | - | | - | |
| 25 | | | | | | |
| 26 | Completed Construction - Not Classified (Note 3) | 106 | - | | - | |
| 27 | | | | | | |
| 28 | Electric Plant Acquisition Adjustment | 114 | - | | - | |
| 29 | | | | | | |
| 30 | **Total Corporate Plant in Service** | | **380,998,099** | Line 786, Col AP | **380,998,099** | **74,673,611** |
| 31 | | | - | | | |

| | A | B | AE | AF | AG | AH |
|---|---|---|---|---|---|---|
| 1 | **Public Service Company of New Mexico** | | | | | |
| 2 | **Schedule B-1** | | | | | |
| 3 | **Original Cost of Plant in Service by Primary Account** | | | | | |
| 4 | **Base Period Ending 6/30/2026** | | | | | |
| 5 | **Test Period Ending 9/30/2028** | | | | | |
| 6 | **This schedule is sponsored by PNM Witness Gutierrez** | | | | | |
| 7 | **Utility Account** | **FERC** | **Retirements** | **Adjustments** | **Transfers** | **Other DR/CR Note 1** |
| 8 | | | | | | |
| 9 | Electric Plant in Service | 101 | (60,001,807) | | | |
| 10 | | | | | | |
| 11 | Electric Plant Purchased | 102 | | | | |
| 12 | | | | | | |
| 13 | Completed Construction - Not Classified (Note 3) | 106 | | | | |
| 14 | | | | | | |
| 15 | Electric Plant Acquisition Adjustment | 114 | | | | (832,053) |
| 16 | | | | | | |
| 17 | **Total Plant in Service - PNM** | | **(60,001,807)** | **-** | **-** | **(832,053)** |
| 18 | | | | | | |
| 19 | | | | | | |
| 20 | Corporate - Unallocated | | | | | |
| 21 | | | | | | |
| 22 | Electric Plant in Service | 101 | (6,856,005) | | | |
| 23 | | | | | | |
| 24 | Electric Plant Purchased | 102 | | | | |
| 25 | | | | | | |
| 26 | Completed Construction - Not Classified (Note 3) | 106 | | | | |
| 27 | | | | | | |
| 28 | Electric Plant Acquisition Adjustment | 114 | | | | |
| 29 | | | | | | |
| 30 | **Total Corporate Plant in Service** | | **(6,856,005)** | **-** | **-** | **-** |
| 31 | | | | | | |

| | A | B | AI | AJ | AK | AL |
|---|---|---|---|---|---|---|
| 1 | **Public Service Company of New Mexico** | | | | | |
| 2 | **Schedule B-1** | | | | | |
| 3 | **Original Cost of Plant in Service by Primary Account** | | | | | |
| 4 | **Base Period Ending 6/30/2026** | | | | | |
| 5 | **Test Period Ending 9/30/2028** | | | | | |
| 6 | **This schedule is sponsored by PNM Witness Gutierrez** | | | | | |
| 7 | **Utility Account** | **FERC** | **Test Period Ending Balance Sept-28** | **Total Test Period Adjustments Note 2** | **Adjusted Test Period Ending Balance Sept-28** | **Reference to PNM Exhibit RNG-4 WP Plant - B-3 - Base, Link, Test** |
| 8 | | | | | | |
| 9 | Electric Plant in Service | 101 | 8,905,149,128 | (324,598,640) | 8,580,550,488 | |
| 10 | | | - | | | |
| 11 | Electric Plant Purchased | 102 | - | | - | |
| 12 | | | - | | | |
| 13 | Completed Construction - Not Classified (Note 3) | 106 | - | | - | |
| 14 | | | - | | | |
| 15 | Electric Plant Acquisition Adjustment | 114 | 14,491,601 | 416,027 | 14,907,628 | |
| 16 | | | | | | |
| 17 | **Total Plant in Service - PNM** | | **8,919,640,729** | **(324,182,614)** | **8,595,458,116** | Line 755, Col BH |
| 18 | | | | | - | |
| 19 | | | | | | |
| 20 | Corporate - Unallocated | | | | | |
| 21 | | | | | | |
| 22 | Electric Plant in Service | 101 | 448,815,705 | (157,335,897) | 291,479,808 | |
| 23 | | | | | | |
| 24 | Electric Plant Purchased | 102 | - | | - | |
| 25 | | | | | | |
| 26 | Completed Construction - Not Classified (Note 3) | 106 | - | | - | |
| 27 | | | | | | |
| 28 | Electric Plant Acquisition Adjustment | 114 | - | | - | |
| 29 | | | | | | |
| 30 | **Total Corporate Plant in Service** | | **448,815,705** | **(157,335,897)** | **291,479,808** | Line 786, Col BH |
| 31 | | | | | - | |

| | A |
|---|---|
| 1 | **Public Service Company of New Mexico** |
| 2 | **Schedule B-1** |
| 3 | **Original Cost of Plant in Service by Primary Account (Notes)** |
| 4 | **Base Period Ending 6/30/2026** |
| 5 | **Test Period Ending 9/30/2028** |
| 6 | **This schedule is sponsored by PNM Witness Gutierrez** |
| 7 | |
| 8 | Note 1: Amortization of acquisition adjustments is shown in the Other DR/CR column on line 15. |
| 9 | Please see PNM Exhibit RNG-4, WP Plant-1c for monthly amortization expense |
| 10 | Note 2: Please see PNM Exhibit RNG-4, WP B-3 Base, Link & Test for adjustments to gross plant in service balances |
| 11 | Note 3: PNM does not forecast changes to FERC Account 106 - Completed Construction - Not Classified |
| 12 | Base period data is historical information from the Company's Book Balance Amounts. |

# PNM Schedule B-2

Original cost of plant in service by detail account

| | A | B | C | D | E | F |
|---|---|---|---|---|---|---|
| 1 | **Public Service Company of New Mexico** | | | | | |
| 2 | **Schedule B-2** | | | | | |
| 3 | **Original Cost of Plant In Service by Detail Account** | | | | | |
| 4 | **Base Period Ending 6/30/2026** | | | | | |
| 5 | **Test Period Ending 9/30/2028** | | | | | |
| 6 | **This schedule is sponsored by PNM Witness Gutierrez** | | | | | |
| 7 | **Utility Account** | **FERC** | **Base Period Beginning Balance Jul-25** | **Additions** | **Retirements** | **Adjustments** |
| 8 | Steam Production Plant | | | | | |
| 9 | Land and Land Rights | 310 | 618,487 | - | - | - |
| 10 | Land Right of Way | 310.1 | 25,958 | - | - | - |
| 11 | Structures & Improvements | 311 | 34,030,341 | 50,524 | (21,792) | - |
| 12 | Boiler Plant Equipment | 312 | 311,210,647 | 2,410,568 | (1,265,607) | - |
| 13 | Turbogenerator Units | 314 | 72,876,461 | 3,523,583 | (114,100) | - |
| 14 | Accessory Electric Equipment | 315 | 25,464,048 | 84,900 | (234,845) | - |
| 15 | Computer Hardware | 315.01 | - | - | - | - |
| 16 | Computer Software | 315.02 | 1,346,383 | 15,863 | - | - |
| 17 | Communication Equipment | 315.03 | 322,679 | 11,374 | - | - |
| 18 | Misc Power Plant Equipment | 316 | 34,637,657 | 1,412,019 | (531,239) | - |
| 19 | Asset Retirement Costs - Steam | 317 | 7,441,454 | 2,808,022 | - | - |
| 20 | **Total Steam Production Plant** | | **487,974,115** | **10,316,853** | **(2,167,582)** | **-** |
| 21 | | | | | | |
| 22 | Nuclear Production Plant | | | | | |
| 23 | Land and land rights | 320 | 439,822 | - | - | - |
| 24 | Land Right of Way | 320.1 | 44,622 | - | - | - |
| 25 | Structures and improvements | 321 | 202,237,760 | 5,085,761 | (1,181,645) | - |
| 26 | Reactor plant equipment | 322 | 333,424,065 | 3,402,959 | (1,060,055) | - |
| 27 | Turbogenerator units | 323 | 112,785,657 | 3,082,163 | (888,048) | - |
| 28 | Accessory electric equipment | 324 | 56,038,293 | 4,985,305 | (102,248) | - |
| 29 | Computer Hardware | 324.01 | - | - | - | - |
| 30 | Computer Software | 324.02 | 5,397,853 | 8,651,897 | (974,957) | - |
| 31 | Communication Equipment | 324.03 | 408,257 | - | (43,565) | - |
| 32 | Misc power plant equipment | 325 | 70,129,985 | 1,089,632 | (188,782) | - |
| 33 | Asset Retirement Costs-Nuclear | 326 | 12,831,931 | - | - | - |
| 34 | **Total Nuclear Production** | | **793,738,244** | **26,297,716** | **(4,439,300)** | **-** |
| 35 | | | | | | |
| 36 | Solar Production Plant | | | | | |

| | A | B | C | D | E | F |
|---|---|---|---|---|---|---|
| 1 | **Public Service Company of New Mexico** | | | | | |
| 2 | **Schedule B-2** | | | | | |
| 3 | **Original Cost of Plant In Service by Detail Account** | | | | | |
| 4 | **Base Period Ending 6/30/2026** | | | | | |
| 5 | **Test Period Ending 9/30/2028** | | | | | |
| 6 | **This schedule is sponsored by PNM Witness Gutierrez** | | | | | |
| 7 | **Utility Account** | **FERC** | **Base Period Beginning Balance Jul-25** | **Additions** | **Retirements** | **Adjustments** |
| 37 | Land & Land Rights | 338.01 | 11,040,948 | - | - | - |
| 38 | Structures and Improvements | 338.02 | 268,299 | - | - | - |
| 39 | Solar Panels | 338.04 | 277,545,592 | - | - | - |
| 40 | Collector System | 338.05 | 8,264,812 | - | - | - |
| 41 | Solar Inverters | 338.07 | - | | | |
| 42 | Other Accessory Electrical Equipment | 338.08 | 33,903,100 | - | - | - |
| 43 | Computer Hardware | 338.09 | 51,760 | - | - | - |
| 44 | Computer Software | 338.10 | - | - | - | - |
| 45 | Communication Equipment | 338.11 | 637,577 | - | - | - |
| 46 | Misc. Power Plant Equipment | 338.12 | 5,228,178 | - | - | - |
| 47 | **Total Solar Production** | | **336,940,266** | **-** | **-** | **-** |
| 48 | | | | | | |
| 49 | Other Production Plant | | | | | |
| 50 | Land and land rights | 340 | 7,079,884 | - | - | - |
| 51 | Land Right of Way | 340.1 | 1,959,313 | - | - | - |
| 52 | Structures and improvements | 341 | 94,104,168 | 2,478,606 | (1,227,246) | - |
| 53 | Fuel holders,producrs,accessr | 342 | 113,190,800 | 7,579,671 | (335,074) | - |
| 54 | Prime movers | 343 | - | - | - | - |
| 55 | Generators | 344 | 260,760,958 | 1,167,443 | (4,750,626) | - |
| 56 | Accessory electric equipment | 345 | 24,022,366 | 209,339 | (106,148) | - |
| 57 | Computer hardware | 345.1 | 53,885 | - | - | - |
| 58 | Computer software | 345.2 | 117,298 | (56,367) | - | - |
| 59 | Communication equipment | 345.3 | 38,862 | - | - | - |
| 60 | Misc power plant equipment | 346 | 46,524,239 | 982,671 | (1,211,394) | - |
| 61 | ARO Other Production | 347 | 3,590,447 | 3,418,126 | - | - |
| 62 | **Total Other Production** | | **551,442,220** | **15,779,489** | **(7,630,488)** | **-** |
| 63 | | | | | | |
| 64 | Energy Storage Plant | | | | | |
| 65 | Land & Land Rights | 387.01 | - | - | - | - |

| | A | B | C | D | E | F |
|---|---|---|---|---|---|---|
| 1 | **Public Service Company of New Mexico** | | | | | |
| 2 | **Schedule B-2** | | | | | |
| 3 | **Original Cost of Plant In Service by Detail Account** | | | | | |
| 4 | **Base Period Ending 6/30/2026** | | | | | |
| 5 | **Test Period Ending 9/30/2028** | | | | | |
| 6 | **This schedule is sponsored by PNM Witness Gutierrez** | | | | | |
| 7 | **Utility Account** | **FERC** | **Base Period Beginning Balance Jul-25** | **Additions** | **Retirements** | **Adjustments** |
| 66 | Structures & Improvements | 387.02 | 667,798 | 22,509,008 | - | - |
| 67 | Energy Storage Equipment | 387.03 | 19,475,685 | 13,583,438 | - | - |
| 68 | Collector System | 387.05 | 4,827,171 | 20,796,898 | - | - |
| 69 | Generator Step-Up Transformers (GSU) | 387.06 | 1,712,696 | 57,438,504 | - | - |
| 70 | Inverters | 387.07 | - | - | - | - |
| 71 | Computer Hardware | 387.08 | - | 5,348,140 | - | - |
| 72 | Computer Software | 387.09 | 605,006 | 360,144 | - | - |
| 73 | Communication Equipment | 387.10 | 545,603 | 687,875 | - | - |
| 74 | Misc. Energy Storage Equipment | 387.11 | 4,531,065 | 3,306,185 | - | - |
| 75 | Asset Retirement Costs for Energy Storage | 387.12 | - | - | - | - |
| 76 | **Total Energy Storage Plant** | | **32,365,024** | **124,030,193** | **-** | **-** |
| 77 | | | | | | |
| 78 | Transmission Plant | | | | | |
| 79 | Land and land rights | 350 | 80,575,716 | 979,169 | - | - |
| 80 | Land Right of Way | 350.1 | 53,208,308 | (108,214) | - | - |
| 81 | Computer Hardware | 351.1 | 14,315,535 | 5,816,445 | (2,900,627) | - |
| 82 | Computer Software | 351.2 | 8,257,662 | 1,631,656 | (604,441) | - |
| 83 | Communication Equipment | 351.3 | 42,848,934 | 5,188,649 | (666,755) | - |
| 84 | Structures and improvements | 352 | 216,672,372 | 30,353,614 | (22,937) | - |
| 85 | Station equipment | 353 | 907,450,615 | 65,685,949 | (10,713,322) | - |
| 86 | Computer Hardware | 353.1 | 12,193,036 | - | - | - |
| 87 | Towers and fixtures | 354 | 65,791,175 | (1,078,583) | (63,144) | - |
| 88 | Poles and fixtures | 355 | 542,976,420 | 15,955,321 | (516,516) | - |
| 89 | Overhead conductors, devices | 356 | 227,346,768 | 6,039,817 | (277,259) | - |
| 90 | Underground conduit | 357 | 185,394 | - | - | - |
| 91 | Roads and trails | 359 | 9,800,590 | - | - | - |
| 92 | **Total Transmission Plant** | | **2,181,622,525** | **130,463,822** | **(15,765,002)** | **-** |
| 93 | | | | | | |
| 94 | Distribution Plant | | | | | |

| | A | B | C | D | E | F |
|---|---|---|---|---|---|---|
| 1 | **Public Service Company of New Mexico** | | | | | |
| 2 | **Schedule B-2** | | | | | |
| 3 | **Original Cost of Plant In Service by Detail Account** | | | | | |
| 4 | **Base Period Ending 6/30/2026** | | | | | |
| 5 | **Test Period Ending 9/30/2028** | | | | | |
| 6 | **This schedule is sponsored by PNM Witness Gutierrez** | | | | | |
| 7 | **Utility Account** | **FERC** | **Base Period Beginning Balance Jul-25** | **Additions** | **Retirements** | **Adjustments** |
| 95 | Land and land rights | 360 | 10,357,185 | 2,103,253 | - | - |
| 96 | Land Right of Way | 360.1 | 2,121,278 | - | - | - |
| 97 | Structures and improvements | 361 | 43,327,822 | 29,748,110 | (116,172) | - |
| 98 | Station equipment | 362 | 320,802,895 | 12,119,034 | (1,748,488) | - |
| 99 | Computer Hardware | 363.1 | 3,220,875 | 4,706,356 | (284,060) | - |
| 100 | Computer Software | 363.2 | 28,948,742 | 22,142,826 | (266,981) | - |
| 101 | Communication Equipment | 363.3 | 14,864,799 | 4,023,946 | (456,203) | - |
| 102 | Poles, towers and fixtures | 364 | 402,400,674 | 71,305,820 | (2,837,878) | - |
| 103 | Overhead conductors, devices | 365 | 272,586,510 | 24,785,410 | (1,249,185) | - |
| 104 | Underground conduit | 366 | 177,783,509 | 21,398,401 | (703,448) | - |
| 105 | Undergrnd conductors, devices | 367 | 425,418,098 | 54,967,630 | (1,559,646) | - |
| 106 | Line transformers | 368 | 279,368,276 | 14,595,951 | (1,933,547) | - |
| 107 | Services | 369 | 98,148,074 | 5,094,393 | (303,652) | - |
| 108 | Services - Underground | 369.1 | 161,719,390 | 17,405,353 | (162,166) | - |
| 109 | Meters | 370 | 64,538,791 | 4,246,591 | (1,243,637) | - |
| 110 | Meters - Grid Mod | 370.4 | - | 210,668 | - | - |
| 111 | Installs customer premise | 371 | 9,151,530 | - | - | - |
| 112 | Leased Flood Lighting | 371.1 | 307,353 | - | - | - |
| 113 | Street lighting,signal system | 373 | 28,121,698 | 2,954,318 | (335,278) | - |
| 114 | Asset Retirement Costs-Distr | 374 | 14,202 | - | (14,202) | - |
| 115 | **Total Distribution Plant** | | **2,343,201,699** | **291,808,058** | **(13,214,544)** | **-** |
| 116 | | | | | | |
| 117 | General Plant | | | | | |
| 118 | Miscellaneous Intangible Plant | 303 | - | - | - | - |
| 119 | Land and land rights | 389 | 1,937,568 | - | - | - |
| 120 | Structures and improvements | 390 | 75,244,024 | (263,097) | (976,725) | - |
| 121 | Structures and improvements-BPS Remodeling | 390.1 | 5,904,067 | - | - | - |
| 122 | Structures and improvements-BPS Office Building | 390.2 | 5,965,530 | - | (20,388) | - |
| 123 | Office furniture, equipment | 391 | 5,015,474 | 76,702 | (100,401) | - |

| | A | B | C | D | E | F |
|---|---|---|---|---|---|---|
| 1 | **Public Service Company of New Mexico** | | | | | |
| 2 | **Schedule B-2** | | | | | |
| 3 | **Original Cost of Plant In Service by Detail Account** | | | | | |
| 4 | **Base Period Ending 6/30/2026** | | | | | |
| 5 | **Test Period Ending 9/30/2028** | | | | | |
| 6 | **This schedule is sponsored by PNM Witness Gutierrez** | | | | | |
| 7 | **Utility Account** | **FERC** | **Base Period Beginning Balance Jul-25** | **Additions** | **Retirements** | **Adjustments** |
| 124 | Office Furniture and Equipment - PC System | 391.1 | - | - | - | - |
| 125 | Office Furniture and Equipment - PC's | 391.2 | - | - | - | - |
| 126 | Computer Hardware | 391.3 | - | - | - | - |
| 127 | Computer Hardware - Solar | 391.5 | - | - | - | - |
| 128 | Computer Hardware | 391.7 | - | - | - | - |
| 129 | Transportation equipment | 392 | 4,234,699 | 239,922 | (48,358) | - |
| 130 | Transportation equipment-Heavy | 392.1 | 5,035,647 | - | - | - |
| 131 | Transportation equipment-Trailer | 392.2 | 8,522,596 | (0) | (6,356) | - |
| 132 | Transportation Equipment - Leaseback | 392.4 | - | - | - | - |
| 133 | Stores equipment | 393 | 97,939 | - | - | - |
| 134 | Tools, shop, garage equipment | 394 | 19,891,159 | 749,415 | (580,842) | - |
| 135 | Laboratory equipment | 395 | 206,265 | - | - | - |
| 136 | Power operated equipment | 396 | 7,321,724 | 88,147 | - | - |
| 137 | Computer Hardware | 397.1 | 1,878,678 | 509,113 | - | - |
| 138 | Computer Software | 397.2 | 26,238,792 | 11,585,838 | (888,327) | - |
| 139 | Communication Equipment | 397.3 | (86) | 46,239 | - | - |
| 140 | Miscellaneous equipment | 398 | 1,778,437 | (944) | - | - |
| 141 | ARO General Plant | 399.1 | 19,473 | - | - | - |
| 142 | **Total General Plant** | | **169,291,985** | **13,031,334** | **(2,621,396)** | **-** |
| 143 | | | | | | |
| 144 | **Total Electric Plant In Service** | 101/106 | **6,896,576,079** | **611,727,465** | **(45,838,312)** | **-** |
| 145 | | | | | | |
| 146 | **Electric Plant Purchased** | **102** | | | | |
| 147 | | | | | | |
| 148 | Acq Adj - Palo Verde Unit 1&2 (Drexel) | 114 | - | | | |
| 149 | Acq Adj - Palo Verde Unit 2 (First Chicago) | 114 | 17,195,774 | | | |
| 150 | Acq Adj - (EIP) | 114 | 292,984 | | | |
| 151 | **Electric Plant Acq Adj** | 114 | **17,488,758** | **-** | **-** | **-** |
| 152 | | | | | | |

| | A | B | C | D | E | F |
|---|---|---|---|---|---|---|
| 1 | **Public Service Company of New Mexico** | | | | | |
| 2 | **Schedule B-2** | | | | | |
| 3 | **Original Cost of Plant In Service by Detail Account** | | | | | |
| 4 | **Base Period Ending 6/30/2026** | | | | | |
| 5 | **Test Period Ending 9/30/2028** | | | | | |
| 6 | **This schedule is sponsored by PNM Witness Gutierrez** | | | | | |
| 7 | **Utility Account** | **FERC** | **Base Period Beginning Balance Jul-25** | **Additions** | **Retirements** | **Adjustments** |
| 153 | **Total Plant** | | **6,914,064,837** | **611,727,465** | **(45,838,312)** | **-** |
| 154 | | | | | | |
| 155 | Corporate Plant - Unallocated | | | | | |
| 156 | Miscellaneous Intangible Plant | 303 | - | - | - | - |
| 157 | Land and Land Rights | 389 | 5,133,327 | - | - | - |
| 158 | Structures and Improvements | 390 | 64,774,362 | 7,876,736 | (617,156) | - |
| 159 | Bulk Power Office Building Remodeling | 390.1 | - | - | - | - |
| 160 | Bulk Power Office Building | 390.2 | - | - | - | - |
| 161 | Office Furniture and Equipment | 391 | 871,391 | 144,723 | - | - |
| 162 | Office Furniture and Equipment - PC System | 391.1 | - | - | - | - |
| 163 | Office Furniture and Equipment - PC's | 391.2 | - | - | - | - |
| 164 | Computer Hardware | 391.3 | - | - | - | - |
| 165 | Computer Hardware - Solar | 391.5 | - | - | - | - |
| 166 | Computer Hardware | 391.7 | - | - | - | - |
| 167 | Transportation Equipment - Light | 392 | 318,774 | 31,556 | - | - |
| 168 | Transportation Equipment - Heavy | 392.1 | 52,320 | - | - | - |
| 169 | Transportation Equipment - Trailers | 392.2 | 10,272 | - | - | - |
| 170 | Transportation Equipment - Leaseback | 392.4 | - | - | - | - |
| 171 | Stores Equipment | 393 | - | - | - | - |
| 172 | Tools, Shop & Garage Equipment | 394 | 582,133 | 10,135 | - | - |
| 173 | Laboratory Equipment | 395 | - | - | - | - |
| 174 | Power Operated Equipment | 396 | 26,134 | - | - | - |
| 175 | Communication Equipment | 397 | - | - | - | - |
| 176 | Computer Hardware | 397.1 | 45,119,422 | 9,786,028 | (16,638,068) | - |
| 177 | Computer Software | 397.2 | 164,917,035 | 49,001,167 | (9,289,063) | - |
| 178 | Communication Equipment | 397.3 | 5,095,511 | 2,059 | - | - |
| 179 | Communication Equipment | 397.2 | - | - | - | - |
| 180 | Communication Equipment | 397.3 | - | - | - | - |
| 181 | Miscellaneous Equipment | 398 | - | - | - | - |

| | A | B | C | D | E | F |
|---|---|---|---|---|---|---|
| 1 | **Public Service Company of New Mexico** | | | | | |
| 2 | **Schedule B-2** | | | | | |
| 3 | **Original Cost of Plant In Service by Detail Account** | | | | | |
| 4 | **Base Period Ending 6/30/2026** | | | | | |
| 5 | **Test Period Ending 9/30/2028** | | | | | |
| 6 | **This schedule is sponsored by PNM Witness Gutierrez** | | | | | |
| 7 | **Utility Account** | **FERC** | **Base Period Beginning Balance Jul-25** | **Additions** | **Retirements** | **Adjustments** |
| 182 | ARO General Plant-1 | 399 | - | - | - | - |
| 183 | **Total Corporate** | | **286,900,681** | **66,852,404** | **(26,544,286)** | **-** |
| 184 | | | | | | |
| 185 | **Total Electric Plant In Service-Corporate** | 101/106 | **286,900,681** | **66,852,404** | **(26,544,286)** | **-** |
| 186 | | | | | | |
| 187 | **Electric Plant Purchased-Corporate** | 102 | | | | |
| 188 | | | | | | |
| 189 | **Electric Plant Acq Adj-Corporate** | 114 | | | | |
| 190 | | | | | | |
| 191 | **Total Corporate** | | **286,900,681** | **66,852,404** | **(26,544,286)** | **-** |
| 192 | | | | | | |
| 193 | **Total Electric Plant In Service w/Corporate** | **101/106** | **7,183,476,760** | **678,579,869** | **(72,382,599)** | **-** |
| 194 | | | | | | |
| 195 | **Electric Plant Purchased w/Corporate** | **102** | **-** | **-** | **-** | **-** |
| 196 | | | | | | |
| 197 | **Electric Plant Acq Adj w/Corporate** | **114** | **17,488,758** | **-** | **-** | **-** |
| 198 | | | | | | |
| 199 | **Total Plant In Service w/Corporate** | | **7,200,965,518** | **678,579,869** | **(72,382,599)** | **-** |

| | A | B | G | H | I | J |
|---|---|---|---|---|---|---|
| 1 | **Public Service Company of New Mexico** | | | | | |
| 2 | **Schedule B-2** | | | | | |
| 3 | **Original Cost of Plant In Service by Detail Account** | | | | | |
| 4 | **Base Period Ending 6/30/2026** | | | | | |
| 5 | **Test Period Ending 9/30/2028** | | | | | |
| 6 | **This schedule is sponsored by PNM Witness Gutierrez** | | | | | |
| 7 | **Utility Account** | **FERC** | **Transfers** | **Other DR/CR** | **Base Period Ending Balance Jun-26** | **Total Base Period Adjustments Note 1** |
| 8 | Steam Production Plant | | | | | |
| 9 | Land and Land Rights | 310 | - | | 618,487 | - |
| 10 | Land Right of Way | 310.1 | - | | 25,958 | (3,591) |
| 11 | Structures & Improvements | 311 | - | | 34,059,073 | (5,908,483) |
| 12 | Boiler Plant Equipment | 312 | - | | 312,355,608 | (50,313,403) |
| 13 | Turbogenerator Units | 314 | - | | 76,285,943 | (9,436,121) |
| 14 | Accessory Electric Equipment | 315 | - | | 25,314,103 | (4,905,626) |
| 15 | Computer Hardware | 315.01 | - | - | - | - |
| 16 | Computer Software | 315.02 | - | | 1,362,246 | - |
| 17 | Communication Equipment | 315.03 | - | | 334,053 | - |
| 18 | Misc Power Plant Equipment | 316 | - | | 35,518,438 | (7,381,116) |
| 19 | Asset Retirement Costs - Steam | 317 | - | | 10,249,476 | - |
| 20 | **Total Steam Production Plant** | | **-** | **-** | **496,123,385** | **(77,948,340)** |
| 21 | | | | | | |
| 22 | Nuclear Production Plant | | | | | |
| 23 | Land and land rights | 320 | - | | 439,822 | |
| 24 | Land Right of Way | 320.1 | - | | 44,622 | |
| 25 | Structures and improvements | 321 | - | | 206,141,876 | |
| 26 | Reactor plant equipment | 322 | - | | 335,766,969 | |
| 27 | Turbogenerator units | 323 | - | | 114,979,772 | |
| 28 | Accessory electric equipment | 324 | - | | 60,921,349 | |
| 29 | Computer Hardware | 324.01 | - | - | - | - |
| 30 | Computer Software | 324.02 | (1,714) | | 13,073,078 | |
| 31 | Communication Equipment | 324.03 | 39,890 | | 404,583 | |
| 32 | Misc power plant equipment | 325 | - | | 71,030,834 | |
| 33 | Asset Retirement Costs-Nuclear | 326 | - | | 12,831,931 | (12,831,931) |
| 34 | **Total Nuclear Production** | | **38,176** | **-** | **815,634,837** | **(12,831,931)** |
| 35 | | | | | | |
| 36 | Solar Production Plant | | | | | |

| | A | B | G | H | I | J |
|---|---|---|---|---|---|---|
| 1 | **Public Service Company of New Mexico** | | | | | |
| 2 | **Schedule B-2** | | | | | |
| 3 | **Original Cost of Plant In Service by Detail Account** | | | | | |
| 4 | **Base Period Ending 6/30/2026** | | | | | |
| 5 | **Test Period Ending 9/30/2028** | | | | | |
| 6 | **This schedule is sponsored by PNM Witness Gutierrez** | | | | | |
| 7 | **Utility Account** | **FERC** | **Transfers** | **Other DR/CR** | **Base Period Ending Balance Jun-26** | **Total Base Period Adjustments Note 1** |
| 37 | Land & Land Rights | 338.01 | - | | 11,040,948 | |
| 38 | Structures and Improvements | 338.02 | - | | 268,299 | |
| 39 | Solar Panels | 338.04 | - | | 277,545,592 | |
| 40 | Collector System | 338.05 | - | | 8,264,812 | |
| 41 | Solar Inverters | 338.07 | | | | |
| 42 | Other Accessory Electrical Equipment | 338.08 | - | | 33,903,100 | |
| 43 | Computer Hardware | 338.09 | - | | 51,760 | |
| 44 | Computer Software | 338.10 | - | | - | |
| 45 | Communication Equipment | 338.11 | - | | 637,577 | |
| 46 | Misc. Power Plant Equipment | 338.12 | - | | 5,228,178 | |
| 47 | **Total Solar Production** | | **-** | **-** | **336,940,266** | **-** |
| 48 | | | | | | |
| 49 | Other Production Plant | | | | | |
| 50 | Land and land rights | 340 | - | | 7,079,884 | |
| 51 | Land Right of Way | 340.1 | - | | 1,959,313 | |
| 52 | Structures and improvements | 341 | - | | 95,355,528 | |
| 53 | Fuel holders,producrs,accessr | 342 | - | | 120,435,397 | |
| 54 | Prime movers | 343 | - | | - | |
| 55 | Generators | 344 | - | | 257,177,775 | |
| 56 | Accessory electric equipment | 345 | - | | 24,125,557 | |
| 57 | Computer hardware | 345.1 | - | | 53,885 | |
| 58 | Computer software | 345.2 | - | | 60,931 | |
| 59 | Communication equipment | 345.3 | - | | 38,862 | |
| 60 | Misc power plant equipment | 346 | - | | 46,295,516 | |
| 61 | ARO Other Production | 347 | - | | 7,008,573 | |
| 62 | **Total Other Production** | | **-** | **-** | **559,591,222** | **-** |
| 63 | | | | | | |
| 64 | Energy Storage Plant | | | | | |
| 65 | Land & Land Rights | 387.01 | - | | - | |

| | A | B | G | H | I | J |
|---|---|---|---|---|---|---|
| 1 | **Public Service Company of New Mexico** | | | | | |
| 2 | **Schedule B-2** | | | | | |
| 3 | **Original Cost of Plant In Service by Detail Account** | | | | | |
| 4 | **Base Period Ending 6/30/2026** | | | | | |
| 5 | **Test Period Ending 9/30/2028** | | | | | |
| 6 | **This schedule is sponsored by PNM Witness Gutierrez** | | | | | |
| 7 | **Utility Account** | **FERC** | **Transfers** | **Other DR/CR** | **Base Period Ending Balance Jun-26** | **Total Base Period Adjustments Note 1** |
| 66 | Structures & Improvements | 387.02 | - | | 23,176,805.65 | |
| 67 | Energy Storage Equipment | 387.03 | - | | 33,059,122.89 | |
| 68 | Collector System | 387.05 | - | | 25,624,069.08 | |
| 69 | Generator Step-Up Transformers (GSU) | 387.06 | - | | 59,151,200.60 | |
| 70 | Inverters | 387.07 | - | | - | |
| 71 | Computer Hardware | 387.08 | - | | 5,348,140.30 | |
| 72 | Computer Software | 387.09 | - | | 965,149.64 | |
| 73 | Communication Equipment | 387.10 | - | | 1,233,478.11 | |
| 74 | Misc. Energy Storage Equipment | 387.11 | - | | 7,837,250.58 | |
| 75 | Asset Retirement Costs for Energy Storage | 387.12 | - | | - | |
| 76 | **Total Energy Storage Plant** | | **-** | **-** | **156,395,217** | **-** |
| 77 | | | | | | |
| 78 | Transmission Plant | | | | | |
| 79 | Land and land rights | 350 | 0 | | 81,554,885 | |
| 80 | Land Right of Way | 350.1 | - | | 53,100,094 | |
| 81 | Computer Hardware | 351.1 | 124,800 | | 17,356,153 | |
| 82 | Computer Software | 351.2 | - | | 9,284,877 | |
| 83 | Communication Equipment | 351.3 | (123,433) | | 47,247,395 | |
| 84 | Structures and improvements | 352 | - | | 247,003,049 | (1,042,150) |
| 85 | Station equipment | 353 | 296 | | 962,423,537 | |
| 86 | Computer Hardware | 353.1 | - | | 12,193,036 | |
| 87 | Towers and fixtures | 354 | (333,253) | | 64,316,194 | |
| 88 | Poles and fixtures | 355 | (178,622) | | 558,236,602 | |
| 89 | Overhead conductors, devices | 356 | 386,022 | | 233,495,347 | |
| 90 | Underground conduit | 357 | - | | 185,394 | |
| 91 | Roads and trails | 359 | - | | 9,800,590 | |
| 92 | **Total Transmission Plant** | | **(124,190)** | **-** | **2,296,197,155** | **(1,042,150)** |
| 93 | | | | | | |
| 94 | Distribution Plant | | | | | |

| | A | B | G | H | I | J |
|---|---|---|---|---|---|---|
| 1 | **Public Service Company of New Mexico** | | | | | |
| 2 | **Schedule B-2** | | | | | |
| 3 | **Original Cost of Plant In Service by Detail Account** | | | | | |
| 4 | **Base Period Ending 6/30/2026** | | | | | |
| 5 | **Test Period Ending 9/30/2028** | | | | | |
| 6 | **This schedule is sponsored by PNM Witness Gutierrez** | | | | | |
| 7 | **Utility Account** | **FERC** | **Transfers** | **Other DR/CR** | **Base Period Ending Balance Jun-26** | **Total Base Period Adjustments Note 1** |
| 95 | Land and land rights | 360 | (2,042,853) | | 10,417,584 | |
| 96 | Land Right of Way | 360.1 | - | | 2,121,278 | |
| 97 | Structures and improvements | 361 | - | | 72,959,760 | |
| 98 | Station equipment | 362 | 140,125 | | 331,313,566 | |
| 99 | Computer Hardware | 363.1 | 36,602 | | 7,679,772 | |
| 100 | Computer Software | 363.2 | 1,268,147 | | 52,092,734 | |
| 101 | Communication Equipment | 363.3 | 6,262 | | 18,438,804 | |
| 102 | Poles, towers and fixtures | 364 | (252) | | 470,868,364 | |
| 103 | Overhead conductors, devices | 365 | 12,118 | | 296,134,853 | |
| 104 | Underground conduit | 366 | (27,379) | | 198,451,082 | |
| 105 | Undergrnd conductors, devices | 367 | 15,514 | | 478,841,595 | |
| 106 | Line transformers | 368 | - | | 292,030,680 | |
| 107 | Services | 369 | 83,125 | | 103,021,939 | |
| 108 | Services - Underground | 369.1 | (83,125) | | 178,879,452 | |
| 109 | Meters | 370 | - | | 67,541,744 | |
| 110 | Meters - Grid Mod | 370.4 | - | | 210,668 | |
| 111 | Installs customer premise | 371 | - | | 9,151,530 | |
| 112 | Leased Flood Lighting | 371.1 | - | | 307,353 | |
| 113 | Street lighting,signal system | 373 | 318,121 | | 31,058,860 | |
| 114 | Asset Retirement Costs-Distr | 374 | - | | - | |
| 115 | **Total Distribution Plant** | | **(273,596)** | **-** | **2,621,521,617** | **-** |
| 116 | | | | | | |
| 117 | General Plant | | | | | |
| 118 | Miscellaneous Intangible Plant | 303 | - | - | - | - |
| 119 | Land and land rights | 389 | - | | 1,937,568 | - |
| 120 | Structures and improvements | 390 | - | | 74,004,202 | - |
| 121 | Structures and improvements-BPS Remodeling | 390.1 | - | | 5,904,067 | - |
| 122 | Structures and improvements-BPS Office Building | 390.2 | - | | 5,945,142 | - |
| 123 | Office furniture, equipment | 391 | (36,602) | | 4,955,173 | - |

| | A | B | G | H | I | J |
|---|---|---|---|---|---|---|
| 1 | **Public Service Company of New Mexico** | | | | | |
| 2 | **Schedule B-2** | | | | | |
| 3 | **Original Cost of Plant In Service by Detail Account** | | | | | |
| 4 | **Base Period Ending 6/30/2026** | | | | | |
| 5 | **Test Period Ending 9/30/2028** | | | | | |
| 6 | **This schedule is sponsored by PNM Witness Gutierrez** | | | | | |
| 7 | **Utility Account** | **FERC** | **Transfers** | **Other DR/CR** | **Base Period Ending Balance Jun-26** | **Total Base Period Adjustments Note 1** |
| 124 | Office Furniture and Equipment - PC System | 391.1 | - | - | - | - |
| 125 | Office Furniture and Equipment - PC's | 391.2 | - | - | - | - |
| 126 | Computer Hardware | 391.3 | - | - | - | - |
| 127 | Computer Hardware - Solar | 391.5 | - | - | - | - |
| 128 | Computer Hardware | 391.7 | - | - | - | - |
| 129 | Transportation equipment | 392 | - | | 4,426,263 | - |
| 130 | Transportation equipment-Heavy | 392.1 | - | | 5,035,647 | - |
| 131 | Transportation equipment-Trailer | 392.2 | - | | 8,516,240 | - |
| 132 | Transportation Equipment - Leaseback | 392.4 | - | - | - | - |
| 133 | Stores equipment | 393 | - | | 97,939 | - |
| 134 | Tools, shop, garage equipment | 394 | - | | 20,059,732 | - |
| 135 | Laboratory equipment | 395 | - | | 206,265 | - |
| 136 | Power operated equipment | 396 | - | | 7,409,871 | - |
| 137 | Computer Hardware | 397.1 | (1,367) | | 2,386,424 | - |
| 138 | Computer Software | 397.2 | (1,584,554) | | 35,351,749 | - |
| 139 | Communication Equipment | 397.3 | (46,152) | | - | - |
| 140 | Miscellaneous equipment | 398 | - | | 1,777,493 | - |
| 141 | ARO General Plant | 399.1 | - | | 19,473 | - |
| 142 | **Total General Plant** | | **(1,668,675)** | **-** | **178,033,247** | **-** |
| 143 | | | | | | |
| 144 | **Total Electric Plant In Service** | 101/106 | **(2,028,286)** | **-** | **7,460,436,946** | **(91,822,421)** |
| 145 | | | | | | |
| 146 | **Electric Plant Purchased** | **102** | | | **-** | |
| 147 | | | | | | |
| 148 | Acq Adj - Palo Verde Unit 1&2 (Drexel) | 114 | | | - | |
| 149 | Acq Adj - Palo Verde Unit 2 (First Chicago) | 114 | | (832,053) | 16,363,721 | |
| 150 | Acq Adj - (EIP) | 114 | | (292,984) | - | |
| 151 | **Electric Plant Acq Adj** | 114 | **-** | **(1,125,037)** | **16,363,721** | **-** |
| 152 | | | | | | |

| | A | B | G | H | I | J |
|---|---|---|---|---|---|---|
| 1 | **Public Service Company of New Mexico** | | | | | |
| 2 | **Schedule B-2** | | | | | |
| 3 | **Original Cost of Plant In Service by Detail Account** | | | | | |
| 4 | **Base Period Ending 6/30/2026** | | | | | |
| 5 | **Test Period Ending 9/30/2028** | | | | | |
| 6 | **This schedule is sponsored by PNM Witness Gutierrez** | | | | | |
| 7 | **Utility Account** | **FERC** | **Transfers** | **Other DR/CR** | **Base Period Ending Balance Jun-26** | **Total Base Period Adjustments Note 1** |
| 153 | **Total Plant** | | **(2,028,286)** | **(1,125,037)** | **7,476,800,667** | **(91,822,421)** |
| 154 | | | | | | |
| 155 | Corporate Plant - Unallocated | | | | | |
| 156 | Miscellaneous Intangible Plant | 303 | - | - | - | - |
| 157 | Land and Land Rights | 389 | - | - | 5,133,327 | (679,352) |
| 158 | Structures and Improvements | 390 | - | - | 72,033,942 | (17,992,451) |
| 159 | Bulk Power Office Building Remodeling | 390.1 | - | - | - | - |
| 160 | Bulk Power Office Building | 390.2 | - | - | - | - |
| 161 | Office Furniture and Equipment | 391 | - | - | 1,016,114 | (342,436) |
| 162 | Office Furniture and Equipment - PC System | 391.1 | - | - | - | - |
| 163 | Office Furniture and Equipment - PC's | 391.2 | - | - | - | - |
| 164 | Computer Hardware | 391.3 | - | - | - | - |
| 165 | Computer Hardware - Solar | 391.5 | - | - | - | - |
| 166 | Computer Hardware | 391.7 | - | - | - | - |
| 167 | Transportation Equipment - Light | 392 | - | - | 350,330 | (122,931) |
| 168 | Transportation Equipment - Heavy | 392.1 | - | - | 52,320 | (15,461) |
| 169 | Transportation Equipment - Trailers | 392.2 | - | - | 10,272 | (3,604) |
| 170 | Transportation Equipment - Leaseback | 392.4 | - | - | - | - |
| 171 | Stores Equipment | 393 | - | - | - | - |
| 172 | Tools, Shop & Garage Equipment | 394 | - | - | 592,267 | (201,183) |
| 173 | Laboratory Equipment | 395 | - | - | - | - |
| 174 | Power Operated Equipment | 396 | - | - | 26,134 | (7,723) |
| 175 | Communication Equipment | 397 | - | - | - | - |
| 176 | Computer Hardware | 397.1 | - | - | 38,267,382 | (11,621,094) |
| 177 | Computer Software | 397.2 | - | - | 204,629,139 | (61,733,900) |
| 178 | Communication Equipment | 397.3 | - | - | 5,097,570 | (1,788,737) |
| 179 | Communication Equipment | 397.2 | - | - | - | - |
| 180 | Communication Equipment | 397.3 | - | - | - | - |
| 181 | Miscellaneous Equipment | 398 | - | - | - | - |

| | A | B | G | H | I | J |
|---|---|---|---|---|---|---|
| 1 | **Public Service Company of New Mexico** | | | | | |
| 2 | **Schedule B-2** | | | | | |
| 3 | **Original Cost of Plant In Service by Detail Account** | | | | | |
| 4 | **Base Period Ending 6/30/2026** | | | | | |
| 5 | **Test Period Ending 9/30/2028** | | | | | |
| 6 | **This schedule is sponsored by PNM Witness Gutierrez** | | | | | |
| 7 | **Utility Account** | **FERC** | **Transfers** | **Other DR/CR** | **Base Period Ending Balance Jun-26** | **Total Base Period Adjustments Note 1** |
| 182 | ARO General Plant-1 | 399 | - | - | - | - |
| 183 | **Total Corporate** | | **-** | **-** | **327,208,799** | **(94,508,872)** |
| 184 | | | | | | |
| 185 | **Total Electric Plant In Service-Corporate** | 101/106 | **-** | **-** | **327,208,799** | **(94,508,872)** |
| 186 | | | | | | |
| 187 | **Electric Plant Purchased-Corporate** | 102 | | | **-** | |
| 188 | | | | | | |
| 189 | **Electric Plant Acq Adj-Corporate** | 114 | | | **-** | |
| 190 | | | | | | |
| 191 | **Total Corporate** | | **-** | **-** | **327,208,799** | **(94,508,872)** |
| 192 | | | | | | |
| 193 | **Total Electric Plant In Service w/Corporate** | **101/106** | **(2,028,286)** | **-** | **7,787,645,745** | **(186,331,293)** |
| 194 | | | | | | |
| 195 | **Electric Plant Purchased w/Corporate** | **102** | **-** | **-** | **-** | **-** |
| 196 | | | | | | |
| 197 | **Electric Plant Acq Adj w/Corporate** | **114** | **-** | **(1,125,037)** | **16,363,721** | **-** |
| 198 | | | | | | |
| 199 | **Total Plant In Service w/Corporate** | | **(2,028,286)** | **(1,125,037)** | **7,804,009,466** | **(186,331,293)** |

| | A | B | K | L | M | N |
|---|---|---|---|---|---|---|
| 1 | **Public Service Company of New Mexico** | | | | | |
| 2 | **Schedule B-2** | | | | | |
| 3 | **Original Cost of Plant In Service by Detail Account** | | | | | |
| 4 | **Base Period Ending 6/30/2026** | | | | | |
| 5 | **Test Period Ending 9/30/2028** | | | | | |
| 6 | **This schedule is sponsored by PNM Witness Gutierrez** | | | | | |
| 7 | **Utility Account** | **FERC** | **Adjusted Base Period Ending Balance Jun-26** | **Reference to PNM Exhibit RNG-4 WP Plant - B-3 - Base, Link, Test** | **Linkage 1 Beginning Balance Jul-26** | **Additions** |
| 8 | Steam Production Plant | | | | | |
| 9 | Land and Land Rights | 310 | 618,487 | | 618,487 | - |
| 10 | Land Right of Way | 310.1 | 22,368 | | 22,368 | - |
| 11 | Structures & Improvements | 311 | 28,150,590 | | 28,150,590 | 4,348,289 |
| 12 | Boiler Plant Equipment | 312 | 262,042,205 | | 262,042,205 | 3,047,548 |
| 13 | Turbogenerator Units | 314 | 66,849,822 | | 66,849,822 | 1,909,811 |
| 14 | Accessory Electric Equipment | 315 | 20,408,477 | | 20,408,477 | 117,590 |
| 15 | Computer Hardware | 315.01 | - | | - | - |
| 16 | Computer Software | 315.02 | 1,362,246 | | 1,362,246 | - |
| 17 | Communication Equipment | 315.03 | 334,053 | | 334,053 | - |
| 18 | Misc Power Plant Equipment | 316 | 28,137,322 | | 28,137,322 | 470,359 |
| 19 | Asset Retirement Costs - Steam | 317 | 10,249,476 | | 10,249,476 | - |
| 20 | **Total Steam Production Plant** | | **418,175,045** | Line 68, Col Y | **418,175,045** | **9,893,597** |
| 21 | | | | | | |
| 22 | Nuclear Production Plant | | | | | |
| 23 | Land and land rights | 320 | 439,822 | | 439,822 | - |
| 24 | Land Right of Way | 320.1 | 44,622 | | 44,622 | - |
| 25 | Structures and improvements | 321 | 206,141,876 | | 206,141,876 | 1,972,914 |
| 26 | Reactor plant equipment | 322 | 335,766,969 | | 335,766,969 | 8,878,114 |
| 27 | Turbogenerator units | 323 | 114,979,772 | | 114,979,772 | - |
| 28 | Accessory electric equipment | 324 | 60,921,349 | | 60,921,349 | - |
| 29 | Computer Hardware | 324.01 | - | | - | - |
| 30 | Computer Software | 324.02 | 13,073,078 | | 13,073,078 | 845,535 |
| 31 | Communication Equipment | 324.03 | 404,583 | | 404,583 | 140,922 |
| 32 | Misc power plant equipment | 325 | 71,030,834 | | 71,030,834 | 2,254,735 |
| 33 | Asset Retirement Costs-Nuclear | 326 | - | | - | - |
| 34 | **Total Nuclear Production** | | **802,802,906** | Line 141, Col Y | **802,802,906** | **14,092,220** |
| 35 | | | | | | |
| 36 | Solar Production Plant | | | | | |

| | A | B | K | L | M | N |
|---|---|---|---|---|---|---|
| 1 | **Public Service Company of New Mexico** | | | | | |
| 2 | **Schedule B-2** | | | | | |
| 3 | **Original Cost of Plant In Service by Detail Account** | | | | | |
| 4 | **Base Period Ending 6/30/2026** | | | | | |
| 5 | **Test Period Ending 9/30/2028** | | | | | |
| 6 | **This schedule is sponsored by PNM Witness Gutierrez** | | | | | |
| 7 | **Utility Account** | **FERC** | **Adjusted Base Period Ending Balance Jun-26** | **Reference to PNM Exhibit RNG-4 WP Plant - B-3 - Base, Link, Test** | **Linkage 1 Beginning Balance Jul-26** | **Additions** |
| 37 | Land & Land Rights | 338.01 | 11,040,948 | | 11,040,948 | - |
| 38 | Structures and Improvements | 338.02 | 268,299 | | 268,299 | - |
| 39 | Solar Panels | 338.04 | 277,545,592 | | 277,545,592 | - |
| 40 | Collector System | 338.05 | 8,264,812 | | 8,264,812 | - |
| 41 | Solar Inverters | 338.07 | | | | |
| 42 | Other Accessory Electrical Equipment | 338.08 | 33,903,100 | | 33,903,100 | - |
| 43 | Computer Hardware | 338.09 | 51,760 | | 51,760 | - |
| 44 | Computer Software | 338.10 | - | | - | - |
| 45 | Communication Equipment | 338.11 | 637,577 | | 637,577 | - |
| 46 | Misc. Power Plant Equipment | 338.12 | 5,228,178 | | 5,228,178 | - |
| 47 | **Total Solar Production** | | **336,940,266** | Line 248, Col Y | **336,940,266** | **-** |
| 48 | | | | | | |
| 49 | Other Production Plant | | | | | |
| 50 | Land and land rights | 340 | 7,079,884 | | 7,079,884 | - |
| 51 | Land Right of Way | 340.1 | 1,959,313 | | 1,959,313 | - |
| 52 | Structures and improvements | 341 | 95,355,528 | | 95,355,528 | 528,944 |
| 53 | Fuel holders,producrs,accessr | 342 | 120,435,397 | | 120,435,397 | 8,900,815 |
| 54 | Prime movers | 343 | - | | - | - |
| 55 | Generators | 344 | 257,177,775 | | 257,177,775 | 5,850,469 |
| 56 | Accessory electric equipment | 345 | 24,125,557 | | 24,125,557 | 3,490,524 |
| 57 | Computer hardware | 345.1 | 53,885 | | 53,885 | - |
| 58 | Computer software | 345.2 | 60,931 | | 60,931 | - |
| 59 | Communication equipment | 345.3 | 38,862 | | 38,862 | - |
| 60 | Misc power plant equipment | 346 | 46,295,516 | | 46,295,516 | 2,685,410 |
| 61 | ARO Other Production | 347 | 7,008,573 | | 7,008,573 | - |
| 62 | **Total Other Production** | | **559,591,222** | Line 351, Col Y | **559,591,222** | **21,456,162** |
| 63 | | | | | | |
| 64 | Energy Storage Plant | | | | | |
| 65 | Land & Land Rights | 387.01 | - | | - | - |

| | A | B | K | L | M | N |
|---|---|---|---|---|---|---|
| 1 | **Public Service Company of New Mexico** | | | | | |
| 2 | **Schedule B-2** | | | | | |
| 3 | **Original Cost of Plant In Service by Detail Account** | | | | | |
| 4 | **Base Period Ending 6/30/2026** | | | | | |
| 5 | **Test Period Ending 9/30/2028** | | | | | |
| 6 | **This schedule is sponsored by PNM Witness Gutierrez** | | | | | |
| 7 | **Utility Account** | **FERC** | **Adjusted Base Period Ending Balance Jun-26** | **Reference to PNM Exhibit RNG-4 WP Plant - B-3 - Base, Link, Test** | **Linkage 1 Beginning Balance Jul-26** | **Additions** |
| 66 | Structures & Improvements | 387.02 | 23,176,805.65 | | 23,176,805.65 | - |
| 67 | Energy Storage Equipment | 387.03 | 33,059,122.89 | | 33,059,122.89 | 85,466,548 |
| 68 | Collector System | 387.05 | 25,624,069.08 | | 25,624,069.08 | - |
| 69 | Generator Step-Up Transformers (GSU) | 387.06 | 59,151,200.60 | | 59,151,200.60 | - |
| 70 | Inverters | 387.07 | - | | - | - |
| 71 | Computer Hardware | 387.08 | 5,348,140.30 | | 5,348,140.30 | - |
| 72 | Computer Software | 387.09 | 965,149.64 | | 965,149.64 | - |
| 73 | Communication Equipment | 387.10 | 1,233,478.11 | | 1,233,478.11 | - |
| 74 | Misc. Energy Storage Equipment | 387.11 | 7,837,250.58 | | 7,837,250.58 | - |
| 75 | Asset Retirement Costs for Energy Storage | 387.12 | - | | - | - |
| 76 | **Total Energy Storage Plant** | | **156,395,217** | Line 397, Col Y | **156,395,217** | **85,466,548** |
| 77 | | | | | | |
| 78 | Transmission Plant | | | | | |
| 79 | Land and land rights | 350 | 81,554,885 | | 81,554,885 | 1,091,686 |
| 80 | Land Right of Way | 350.1 | 53,100,094 | | 53,100,094 | 786,234 |
| 81 | Computer Hardware | 351.1 | 17,356,153 | | 17,356,153 | 2,179,254 |
| 82 | Computer Software | 351.2 | 9,284,877 | | 9,284,877 | 742,225 |
| 83 | Communication Equipment | 351.3 | 47,247,395 | | 47,247,395 | 5,789,485 |
| 84 | Structures and improvements | 352 | 245,960,899 | | 245,960,899 | 23,531,598 |
| 85 | Station equipment | 353 | 962,423,537 | | 962,423,537 | 87,004,577 |
| 86 | Computer Hardware | 353.1 | 12,193,036 | | 12,193,036 | 78,393 |
| 87 | Towers and fixtures | 354 | 64,316,194 | | 64,316,194 | 189,691 |
| 88 | Poles and fixtures | 355 | 558,236,602 | | 558,236,602 | 10,303,791 |
| 89 | Overhead conductors, devices | 356 | 233,495,347 | | 233,495,347 | 5,330,530 |
| 90 | Underground conduit | 357 | 185,394 | | 185,394 | 547,802 |
| 91 | Roads and trails | 359 | 9,800,590 | | 9,800,590 | - |
| 92 | **Total Transmission Plant** | | **2,295,155,005** | Line 467, Col Y | **2,295,155,005** | **137,575,265** |
| 93 | | | | | | |
| 94 | Distribution Plant | | | | | |

| | A | B | K | L | M | N |
|---|---|---|---|---|---|---|
| 1 | **Public Service Company of New Mexico** | | | | | |
| 2 | **Schedule B-2** | | | | | |
| 3 | **Original Cost of Plant In Service by Detail Account** | | | | | |
| 4 | **Base Period Ending 6/30/2026** | | | | | |
| 5 | **Test Period Ending 9/30/2028** | | | | | |
| 6 | **This schedule is sponsored by PNM Witness Gutierrez** | | | | | |
| 7 | **Utility Account** | **FERC** | **Adjusted Base Period Ending Balance Jun-26** | **Reference to PNM Exhibit RNG-4 WP Plant - B-3 - Base, Link, Test** | **Linkage 1 Beginning Balance Jul-26** | **Additions** |
| 95 | Land and land rights | 360 | 10,417,584 | | 10,417,584 | 189,182 |
| 96 | Land Right of Way | 360.1 | 2,121,278 | | 2,121,278 | 2,563,909 |
| 97 | Structures and improvements | 361 | 72,959,760 | | 72,959,760 | 3,848,948 |
| 98 | Station equipment | 362 | 331,313,566 | | 331,313,566 | 64,849,472 |
| 99 | Computer Hardware | 363.1 | 7,679,772 | | 7,679,772 | 10,064,292 |
| 100 | Computer Software | 363.2 | 52,092,734 | | 52,092,734 | 29,360,300 |
| 101 | Communication Equipment | 363.3 | 18,438,804 | | 18,438,804 | 14,437,313 |
| 102 | Poles, towers and fixtures | 364 | 470,868,364 | | 470,868,364 | 49,307,282 |
| 103 | Overhead conductors, devices | 365 | 296,134,853 | | 296,134,853 | 51,073,788 |
| 104 | Underground conduit | 366 | 198,451,082 | | 198,451,082 | 16,739,270 |
| 105 | Undergrnd conductors, devices | 367 | 478,841,595 | | 478,841,595 | 30,935,870 |
| 106 | Line transformers | 368 | 292,030,680 | | 292,030,680 | 10,305,694 |
| 107 | Services | 369 | 103,021,939 | | 103,021,939 | 5,357,717 |
| 108 | Services - Underground | 369.1 | 178,879,452 | | 178,879,452 | 16,966,103 |
| 109 | Meters | 370 | 67,541,744 | | 67,541,744 | 4,428,241 |
| 110 | Meters - Grid Mod | 370.4 | 210,668 | | 210,668 | 42,390,432 |
| 111 | Installs customer premise | 371 | 9,151,530 | | 9,151,530 | - |
| 112 | Leased Flood Lighting | 371.1 | 307,353 | | 307,353 | - |
| 113 | Street lighting,signal system | 373 | 31,058,860 | | 31,058,860 | 4,586,884 |
| 114 | Asset Retirement Costs-Distr | 374 | - | | - | - |
| 115 | **Total Distribution Plant** | | **2,621,521,617** | Line 686, Col Y | **2,621,521,617** | **357,404,698** |
| 116 | | | | | | |
| 117 | General Plant | | | | | |
| 118 | Miscellaneous Intangible Plant | 303 | - | | - | - |
| 119 | Land and land rights | 389 | 1,937,568 | | 1,937,568 | - |
| 120 | Structures and improvements | 390 | 74,004,202 | | 74,004,202 | 3,944,083 |
| 121 | Structures and improvements-BPS Remodeling | 390.1 | 5,904,067 | | 5,904,067 | 2,839 |
| 122 | Structures and improvements-BPS Office Building | 390.2 | 5,945,142 | | 5,945,142 | - |
| 123 | Office furniture, equipment | 391 | 4,955,173 | | 4,955,173 | 170,747 |

| | A | B | K | L | M | N |
|---|---|---|---|---|---|---|
| 1 | **Public Service Company of New Mexico** | | | | | |
| 2 | **Schedule B-2** | | | | | |
| 3 | **Original Cost of Plant In Service by Detail Account** | | | | | |
| 4 | **Base Period Ending 6/30/2026** | | | | | |
| 5 | **Test Period Ending 9/30/2028** | | | | | |
| 6 | **This schedule is sponsored by PNM Witness Gutierrez** | | | | | |
| 7 | **Utility Account** | **FERC** | **Adjusted Base Period Ending Balance Jun-26** | **Reference to PNM Exhibit RNG-4 WP Plant - B-3 - Base, Link, Test** | **Linkage 1 Beginning Balance Jul-26** | **Additions** |
| 124 | Office Furniture and Equipment - PC System | 391.1 | - | | - | - |
| 125 | Office Furniture and Equipment - PC's | 391.2 | - | | - | - |
| 126 | Computer Hardware | 391.3 | - | | - | - |
| 127 | Computer Hardware - Solar | 391.5 | - | | - | - |
| 128 | Computer Hardware | 391.7 | - | | - | - |
| 129 | Transportation equipment | 392 | 4,426,263 | | 4,426,263 | 409,447 |
| 130 | Transportation equipment-Heavy | 392.1 | 5,035,647 | | 5,035,647 | 96,410 |
| 131 | Transportation equipment-Trailer | 392.2 | 8,516,240 | | 8,516,240 | 61,422 |
| 132 | Transportation Equipment - Leaseback | 392.4 | - | | - | - |
| 133 | Stores equipment | 393 | 97,939 | | 97,939 | - |
| 134 | Tools, shop, garage equipment | 394 | 20,059,732 | | 20,059,732 | 1,107,387 |
| 135 | Laboratory equipment | 395 | 206,265 | | 206,265 | - |
| 136 | Power operated equipment | 396 | 7,409,871 | | 7,409,871 | 76,016 |
| 137 | Computer Hardware | 397.1 | 2,386,424 | | 2,386,424 | 4,888 |
| 138 | Computer Software | 397.2 | 35,351,749 | | 35,351,749 | (1,212,520) |
| 139 | Communication Equipment | 397.3 | - | | - | - |
| 140 | Miscellaneous equipment | 398 | 1,777,493 | | 1,777,493 | 75,646 |
| 141 | ARO General Plant | 399.1 | 19,473 | | 19,473 | - |
| 142 | **Total General Plant** | | **178,033,247** | Line 744, Col Y | **178,033,247** | **4,736,363** |
| 143 | | | | | | |
| 144 | **Total Electric Plant In Service** | 101/106 | **7,368,614,525** | Line 746, Col Y | **7,368,614,525** | **630,624,853** |
| 145 | | | | | | |
| 146 | **Electric Plant Purchased** | **102** | **-** | | **-** | |
| 147 | | | | | | |
| 148 | Acq Adj - Palo Verde Unit 1&2 (Drexel) | 114 | - | | - | **-** |
| 149 | Acq Adj - Palo Verde Unit 2 (First Chicago) | 114 | 16,363,721 | | 16,363,721 | **-** |
| 150 | Acq Adj - (EIP) | 114 | - | | - | **-** |
| 151 | **Electric Plant Acq Adj** | 114 | **16,363,721** | Line 753, Col Y | **16,363,721** | - |
| 152 | | | | | | |

| | A | B | K | L | M | N |
|---|---|---|---|---|---|---|
| 1 | **Public Service Company of New Mexico** | | | | | |
| 2 | **Schedule B-2** | | | | | |
| 3 | **Original Cost of Plant In Service by Detail Account** | | | | | |
| 4 | **Base Period Ending 6/30/2026** | | | | | |
| 5 | **Test Period Ending 9/30/2028** | | | | | |
| 6 | **This schedule is sponsored by PNM Witness Gutierrez** | | | | | |
| 7 | **Utility Account** | **FERC** | **Adjusted Base Period Ending Balance Jun-26** | **Reference to PNM Exhibit RNG-4 WP Plant - B-3 - Base, Link, Test** | **Linkage 1 Beginning Balance Jul-26** | **Additions** |
| 153 | **Total Plant** | | **7,384,978,246** | Line 755, Col Y | **7,384,978,246** | **630,624,853** |
| 154 | | | (0) | | | |
| 155 | Corporate Plant - Unallocated | | | | | |
| 156 | Miscellaneous Intangible Plant | 303 | - | | - | - |
| 157 | Land and Land Rights | 389 | 4,453,975 | | 5,133,327 | - |
| 158 | Structures and Improvements | 390 | 54,041,491 | | 72,033,942 | 10,009,907 |
| 159 | Bulk Power Office Building Remodeling | 390.1 | - | | - | - |
| 160 | Bulk Power Office Building | 390.2 | - | | - | - |
| 161 | Office Furniture and Equipment | 391 | 673,678 | | 1,016,114 | 527,657 |
| 162 | Office Furniture and Equipment - PC System | 391.1 | - | | - | - |
| 163 | Office Furniture and Equipment - PC's | 391.2 | - | | - | - |
| 164 | Computer Hardware | 391.3 | - | | - | - |
| 165 | Computer Hardware - Solar | 391.5 | - | | - | - |
| 166 | Computer Hardware | 391.7 | - | | - | - |
| 167 | Transportation Equipment - Light | 392 | 227,399 | | 350,330 | - |
| 168 | Transportation Equipment - Heavy | 392.1 | 36,860 | | 52,320 | - |
| 169 | Transportation Equipment - Trailers | 392.2 | 6,668 | | 10,272 | - |
| 170 | Transportation Equipment - Leaseback | 392.4 | - | | - | - |
| 171 | Stores Equipment | 393 | - | | - | - |
| 172 | Tools, Shop & Garage Equipment | 394 | 391,085 | | 592,267 | 1,876 |
| 173 | Laboratory Equipment | 395 | - | | - | - |
| 174 | Power Operated Equipment | 396 | 18,412 | | 26,134 | - |
| 175 | Communication Equipment | 397 | - | | - | - |
| 176 | Computer Hardware | 397.1 | 26,646,288 | | 38,267,382 | 5,919,329 |
| 177 | Computer Software | 397.2 | 142,895,240 | | 204,629,139 | 43,415,442 |
| 178 | Communication Equipment | 397.3 | 3,308,833 | | 5,097,570 | - |
| 179 | Communication Equipment | 397.2 | - | | - | - |
| 180 | Communication Equipment | 397.3 | - | | - | - |
| 181 | Miscellaneous Equipment | 398 | - | | - | - |

| | A | B | K | L | M | N |
|---|---|---|---|---|---|---|
| 1 | **Public Service Company of New Mexico** | | | | | |
| 2 | **Schedule B-2** | | | | | |
| 3 | **Original Cost of Plant In Service by Detail Account** | | | | | |
| 4 | **Base Period Ending 6/30/2026** | | | | | |
| 5 | **Test Period Ending 9/30/2028** | | | | | |
| 6 | **This schedule is sponsored by PNM Witness Gutierrez** | | | | | |
| 7 | **Utility Account** | **FERC** | **Adjusted Base Period Ending Balance Jun-26** | **Reference to PNM Exhibit RNG-4 WP Plant - B-3 - Base, Link, Test** | **Linkage 1 Beginning Balance Jul-26** | **Additions** |
| 182 | ARO General Plant-1 | 399 | - | | - | - |
| 183 | **Total Corporate** | | **232,699,927** | Line 786, Col Y | **327,208,799** | **59,874,211** |
| 184 | | | | | | |
| 185 | **Total Electric Plant In Service-Corporate** | 101/106 | **232,699,927** | | **327,208,799** | **59,874,211** |
| 186 | | | | | | |
| 187 | **Electric Plant Purchased-Corporate** | 102 | **-** | | **-** | |
| 188 | | | | | | |
| 189 | **Electric Plant Acq Adj-Corporate** | 114 | **-** | | **-** | |
| 190 | | | | | | |
| 191 | **Total Corporate** | | **232,699,927** | | **327,208,799** | **59,874,211** |
| 192 | | | | | | |
| 193 | **Total Electric Plant In Service w/Corporate** | **101/106** | **7,601,314,452** | Line 788, Col Y | **7,695,823,324** | **690,499,064** |
| 194 | | | | | | |
| 195 | **Electric Plant Purchased w/Corporate** | **102** | **-** | | **-** | **-** |
| 196 | | | | | | |
| 197 | **Electric Plant Acq Adj w/Corporate** | **114** | **16,363,721** | Line 792, Col Y | **16,363,721** | **-** |
| 198 | | | | | | |
| 199 | **Total Plant In Service w/Corporate** | | **7,617,678,173** | Line 794, Col Y | **7,712,187,045** | **690,499,064** |

| | A | B | O | P | Q | R |
|---|---|---|---|---|---|---|
| 1 | **Public Service Company of New Mexico** | | | | | |
| 2 | **Schedule B-2** | | | | | |
| 3 | **Original Cost of Plant In Service by Detail Account** | | | | | |
| 4 | **Base Period Ending 6/30/2026** | | | | | |
| 5 | **Test Period Ending 9/30/2028** | | | | | |
| 6 | **This schedule is sponsored by PNM Witness Gutierrez** | | | | | |
| 7 | **Utility Account** | **FERC** | **Retirements** | **Adjustments** | **Transfers** | **Other DR/CR** |
| 8 | Steam Production Plant | | | | | |
| 9 | Land and Land Rights | 310 | - | - | - | - |
| 10 | Land Right of Way | 310.1 | - | - | - | - |
| 11 | Structures & Improvements | 311 | (400,332) | - | - | - |
| 12 | Boiler Plant Equipment | 312 | (3,863,712) | - | - | - |
| 13 | Turbogenerator Units | 314 | (412,332) | - | - | - |
| 14 | Accessory Electric Equipment | 315 | (168,840) | - | - | - |
| 15 | Computer Hardware | 315.01 | - | - | - | - |
| 16 | Computer Software | 315.02 | - | - | - | - |
| 17 | Communication Equipment | 315.03 | - | - | - | - |
| 18 | Misc Power Plant Equipment | 316 | (512,784) | - | - | - |
| 19 | Asset Retirement Costs - Steam | 317 | - | - | - | - |
| 20 | **Total Steam Production Plant** | | **(5,358,000)** | **-** | **-** | **-** |
| 21 | | | | | | |
| 22 | Nuclear Production Plant | | | | | |
| 23 | Land and land rights | 320 | - | - | - | - |
| 24 | Land Right of Way | 320.1 | - | - | - | - |
| 25 | Structures and improvements | 321 | (207,180) | - | - | - |
| 26 | Reactor plant equipment | 322 | (834,468) | - | - | - |
| 27 | Turbogenerator units | 323 | (499,836) | - | - | - |
| 28 | Accessory electric equipment | 324 | (116,592) | - | - | - |
| 29 | Computer Hardware | 324.01 | - | - | - | - |
| 30 | Computer Software | 324.02 | - | - | - | - |
| 31 | Communication Equipment | 324.03 | - | - | - | - |
| 32 | Misc power plant equipment | 325 | (19,308) | - | - | - |
| 33 | Asset Retirement Costs-Nuclear | 326 | - | - | - | - |
| 34 | **Total Nuclear Production** | | **(1,677,384)** | **-** | **-** | **-** |
| 35 | | | | | | |
| 36 | Solar Production Plant | | | | | |

| | A | B | O | P | Q | R |
|---|---|---|---|---|---|---|
| 1 | **Public Service Company of New Mexico** | | | | | |
| 2 | **Schedule B-2** | | | | | |
| 3 | **Original Cost of Plant In Service by Detail Account** | | | | | |
| 4 | **Base Period Ending 6/30/2026** | | | | | |
| 5 | **Test Period Ending 9/30/2028** | | | | | |
| 6 | **This schedule is sponsored by PNM Witness Gutierrez** | | | | | |
| 7 | **Utility Account** | **FERC** | **Retirements** | **Adjustments** | **Transfers** | **Other DR/CR** |
| 37 | Land & Land Rights | 338.01 | - | - | - | - |
| 38 | Structures and Improvements | 338.02 | - | - | - | - |
| 39 | Solar Panels | 338.04 | - | - | - | - |
| 40 | Collector System | 338.05 | - | - | - | - |
| 41 | Solar Inverters | 338.07 | | | | |
| 42 | Other Accessory Electrical Equipment | 338.08 | - | - | - | - |
| 43 | Computer Hardware | 338.09 | - | - | - | - |
| 44 | Computer Software | 338.10 | - | - | - | - |
| 45 | Communication Equipment | 338.11 | - | - | - | - |
| 46 | Misc. Power Plant Equipment | 338.12 | - | - | - | - |
| 47 | **Total Solar Production** | | **-** | **-** | **-** | **-** |
| 48 | | | | | | |
| 49 | Other Production Plant | | | | | |
| 50 | Land and land rights | 340 | - | - | - | - |
| 51 | Land Right of Way | 340.1 | - | - | - | - |
| 52 | Structures and improvements | 341 | (453,948) | - | - | - |
| 53 | Fuel holders,producrs,accessr | 342 | (95,004) | - | - | - |
| 54 | Prime movers | 343 | - | - | - | - |
| 55 | Generators | 344 | (923,460) | - | - | - |
| 56 | Accessory electric equipment | 345 | (407,052) | - | - | - |
| 57 | Computer hardware | 345.1 | (53,885) | - | - | - |
| 58 | Computer software | 345.2 | - | - | - | - |
| 59 | Communication equipment | 345.3 | - | - | - | - |
| 60 | Misc power plant equipment | 346 | (207,504) | - | - | - |
| 61 | ARO Other Production | 347 | - | - | - | - |
| 62 | **Total Other Production** | | **(2,140,853)** | **-** | **-** | **-** |
| 63 | | | | | | |
| 64 | Energy Storage Plant | | | | | |
| 65 | Land & Land Rights | 387.01 | - | - | - | - |

| | A | B | O | P | Q | R |
|---|---|---|---|---|---|---|
| 1 | **Public Service Company of New Mexico** | | | | | |
| 2 | **Schedule B-2** | | | | | |
| 3 | **Original Cost of Plant In Service by Detail Account** | | | | | |
| 4 | **Base Period Ending 6/30/2026** | | | | | |
| 5 | **Test Period Ending 9/30/2028** | | | | | |
| 6 | **This schedule is sponsored by PNM Witness Gutierrez** | | | | | |
| 7 | **Utility Account** | **FERC** | **Retirements** | **Adjustments** | **Transfers** | **Other DR/CR** |
| 66 | Structures & Improvements | 387.02 | - | - | - | - |
| 67 | Energy Storage Equipment | 387.03 | - | - | - | - |
| 68 | Collector System | 387.05 | - | - | - | - |
| 69 | Generator Step-Up Transformers (GSU) | 387.06 | - | - | - | - |
| 70 | Inverters | 387.07 | - | - | - | - |
| 71 | Computer Hardware | 387.08 | - | - | - | - |
| 72 | Computer Software | 387.09 | - | - | - | - |
| 73 | Communication Equipment | 387.10 | - | - | - | - |
| 74 | Misc. Energy Storage Equipment | 387.11 | - | - | - | - |
| 75 | Asset Retirement Costs for Energy Storage | 387.12 | - | - | - | - |
| 76 | **Total Energy Storage Plant** | | **-** | **-** | **-** | **-** |
| 77 | | | | | | |
| 78 | Transmission Plant | | | | | |
| 79 | Land and land rights | 350 | - | - | - | - |
| 80 | Land Right of Way | 350.1 | - | - | - | - |
| 81 | Computer Hardware | 351.1 | (1,632,273) | - | - | - |
| 82 | Computer Software | 351.2 | - | - | - | - |
| 83 | Communication Equipment | 351.3 | (610,837) | - | - | - |
| 84 | Structures and improvements | 352 | (202,848) | - | - | - |
| 85 | Station equipment | 353 | (2,959,416) | - | - | - |
| 86 | Computer Hardware | 353.1 | (46,320) | - | - | - |
| 87 | Towers and fixtures | 354 | (297,540) | - | - | - |
| 88 | Poles and fixtures | 355 | (1,398,804) | - | - | - |
| 89 | Overhead conductors, devices | 356 | (200,748) | - | - | - |
| 90 | Underground conduit | 357 | - | - | - | - |
| 91 | Roads and trails | 359 | (1,152) | - | - | - |
| 92 | **Total Transmission Plant** | | **(7,349,938)** | **-** | **-** | **-** |
| 93 | | | | | | |
| 94 | Distribution Plant | | | | | |

| | A | B | O | P | Q | R |
|---|---|---|---|---|---|---|
| 1 | **Public Service Company of New Mexico** | | | | | |
| 2 | **Schedule B-2** | | | | | |
| 3 | **Original Cost of Plant In Service by Detail Account** | | | | | |
| 4 | **Base Period Ending 6/30/2026** | | | | | |
| 5 | **Test Period Ending 9/30/2028** | | | | | |
| 6 | **This schedule is sponsored by PNM Witness Gutierrez** | | | | | |
| 7 | **Utility Account** | **FERC** | **Retirements** | **Adjustments** | **Transfers** | **Other DR/CR** |
| 95 | Land and land rights | 360 | - | - | - | - |
| 96 | Land Right of Way | 360.1 | - | - | - | - |
| 97 | Structures and improvements | 361 | (112,980) | - | - | - |
| 98 | Station equipment | 362 | (1,079,424) | - | - | - |
| 99 | Computer Hardware | 363.1 | - | - | - | - |
| 100 | Computer Software | 363.2 | - | - | - | - |
| 101 | Communication Equipment | 363.3 | (60,348) | - | - | - |
| 102 | Poles, towers and fixtures | 364 | (3,668,676) | - | - | - |
| 103 | Overhead conductors, devices | 365 | (1,808,196) | - | - | - |
| 104 | Underground conduit | 366 | (562,464) | - | - | - |
| 105 | Undergrnd conductors, devices | 367 | (2,115,648) | - | - | - |
| 106 | Line transformers | 368 | (1,284,948) | - | - | - |
| 107 | Services | 369 | (373,800) | - | - | - |
| 108 | Services - Underground | 369.1 | (198,228) | - | - | - |
| 109 | Meters | 370 | (11,867,185) | - | - | - |
| 110 | Meters - Grid Mod | 370.4 | - | - | - | - |
| 111 | Installs customer premise | 371 | - | - | - | - |
| 112 | Leased Flood Lighting | 371.1 | - | - | - | - |
| 113 | Street lighting,signal system | 373 | (260,688) | - | - | - |
| 114 | Asset Retirement Costs-Distr | 374 | - | - | - | - |
| 115 | **Total Distribution Plant** | | **(23,392,586)** | **-** | **-** | **-** |
| 116 | | | | | | |
| 117 | General Plant | | | | | |
| 118 | Miscellaneous Intangible Plant | 303 | - | - | - | - |
| 119 | Land and land rights | 389 | - | - | - | - |
| 120 | Structures and improvements | 390 | (384,996) | - | - | - |
| 121 | Structures and improvements-BPS Remodeling | 390.1 | (25,932) | - | - | - |
| 122 | Structures and improvements-BPS Office Building | 390.2 | - | - | - | - |
| 123 | Office furniture, equipment | 391 | (71,589) | - | - | - |

| | A | B | O | P | Q | R |
|---|---|---|---|---|---|---|
| 1 | **Public Service Company of New Mexico** | | | | | |
| 2 | **Schedule B-2** | | | | | |
| 3 | **Original Cost of Plant In Service by Detail Account** | | | | | |
| 4 | **Base Period Ending 6/30/2026** | | | | | |
| 5 | **Test Period Ending 9/30/2028** | | | | | |
| 6 | **This schedule is sponsored by PNM Witness Gutierrez** | | | | | |
| 7 | **Utility Account** | **FERC** | **Retirements** | **Adjustments** | **Transfers** | **Other DR/CR** |
| 124 | Office Furniture and Equipment - PC System | 391.1 | - | - | - | - |
| 125 | Office Furniture and Equipment - PC's | 391.2 | - | - | - | - |
| 126 | Computer Hardware | 391.3 | - | - | - | - |
| 127 | Computer Hardware - Solar | 391.5 | - | - | - | - |
| 128 | Computer Hardware | 391.7 | - | - | - | - |
| 129 | Transportation equipment | 392 | (33,828) | - | - | - |
| 130 | Transportation equipment-Heavy | 392.1 | (258,996) | - | - | - |
| 131 | Transportation equipment-Trailer | 392.2 | (3,288) | - | - | - |
| 132 | Transportation Equipment - Leaseback | 392.4 | - | - | - | - |
| 133 | Stores equipment | 393 | - | - | - | - |
| 134 | Tools, shop, garage equipment | 394 | (561,029) | - | - | - |
| 135 | Laboratory equipment | 395 | - | - | - | - |
| 136 | Power operated equipment | 396 | (3,240) | - | - | - |
| 137 | Computer Hardware | 397.1 | (1,530,853) | - | - | - |
| 138 | Computer Software | 397.2 | - | - | - | - |
| 139 | Communication Equipment | 397.3 | - | - | - | - |
| 140 | Miscellaneous equipment | 398 | (30,004) | - | - | - |
| 141 | ARO General Plant | 399.1 | - | - | - | - |
| 142 | **Total General Plant** | | **(2,903,755)** | **-** | **-** | **-** |
| 143 | | | | | | |
| 144 | **Total Electric Plant In Service** | 101/106 | **(42,822,515)** | **-** | **-** | **-** |
| 145 | | | | | | |
| 146 | **Electric Plant Purchased** | **102** | | | | |
| 147 | | | | | | |
| 148 | Acq Adj - Palo Verde Unit 1&2 (Drexel) | 114 | **-** | **-** | **-** | - |
| 149 | Acq Adj - Palo Verde Unit 2 (First Chicago) | 114 | **-** | **-** | **-** | (832,053) |
| 150 | Acq Adj - (EIP) | 114 | **-** | **-** | **-** | - |
| 151 | **Electric Plant Acq Adj** | 114 | **-** | - | - | **(832,053)** |
| 152 | | | | | | |

| | A | B | O | P | Q | R |
|---|---|---|---|---|---|---|
| 1 | **Public Service Company of New Mexico** | | | | | |
| 2 | **Schedule B-2** | | | | | |
| 3 | **Original Cost of Plant In Service by Detail Account** | | | | | |
| 4 | **Base Period Ending 6/30/2026** | | | | | |
| 5 | **Test Period Ending 9/30/2028** | | | | | |
| 6 | **This schedule is sponsored by PNM Witness Gutierrez** | | | | | |
| 7 | **Utility Account** | **FERC** | **Retirements** | **Adjustments** | **Transfers** | **Other DR/CR** |
| 153 | **Total Plant** | | **(42,822,515)** | **-** | **-** | **(832,053)** |
| 154 | | | | | | |
| 155 | Corporate Plant - Unallocated | | | | | |
| 156 | Miscellaneous Intangible Plant | 303 | - | - | - | - |
| 157 | Land and Land Rights | 389 | - | - | - | - |
| 158 | Structures and Improvements | 390 | (544,032) | - | - | - |
| 159 | Bulk Power Office Building Remodeling | 390.1 | - | - | - | - |
| 160 | Bulk Power Office Building | 390.2 | - | - | - | - |
| 161 | Office Furniture and Equipment | 391 | - | - | - | - |
| 162 | Office Furniture and Equipment - PC System | 391.1 | - | - | - | - |
| 163 | Office Furniture and Equipment - PC's | 391.2 | - | - | - | - |
| 164 | Computer Hardware | 391.3 | - | - | - | - |
| 165 | Computer Hardware - Solar | 391.5 | - | - | - | - |
| 166 | Computer Hardware | 391.7 | - | - | - | - |
| 167 | Transportation Equipment - Light | 392 | - | - | - | - |
| 168 | Transportation Equipment - Heavy | 392.1 | - | - | - | - |
| 169 | Transportation Equipment - Trailers | 392.2 | - | - | - | - |
| 170 | Transportation Equipment - Leaseback | 392.4 | (144) | - | - | - |
| 171 | Stores Equipment | 393 | - | - | - | - |
| 172 | Tools, Shop & Garage Equipment | 394 | (181,424) | - | - | - |
| 173 | Laboratory Equipment | 395 | - | - | - | - |
| 174 | Power Operated Equipment | 396 | - | - | - | - |
| 175 | Communication Equipment | 397 | - | - | - | - |
| 176 | Computer Hardware | 397.1 | (12,803,231) | - | - | - |
| 177 | Computer Software | 397.2 | - | - | - | - |
| 178 | Communication Equipment | 397.3 | (1,329,066) | - | - | - |
| 179 | Communication Equipment | 397.2 | - | - | - | - |
| 180 | Communication Equipment | 397.3 | - | - | - | - |
| 181 | Miscellaneous Equipment | 398 | - | - | - | - |

| | A | B | O | P | Q | R |
|---|---|---|---|---|---|---|
| 1 | **Public Service Company of New Mexico** | | | | | |
| 2 | **Schedule B-2** | | | | | |
| 3 | **Original Cost of Plant In Service by Detail Account** | | | | | |
| 4 | **Base Period Ending 6/30/2026** | | | | | |
| 5 | **Test Period Ending 9/30/2028** | | | | | |
| 6 | **This schedule is sponsored by PNM Witness Gutierrez** | | | | | |
| 7 | **Utility Account** | **FERC** | **Retirements** | **Adjustments** | **Transfers** | **Other DR/CR** |
| 182 | ARO General Plant-1 | 399 | - | - | - | - |
| 183 | **Total Corporate** | | **(14,857,896)** | **-** | **-** | **-** |
| 184 | | | | | | |
| 185 | **Total Electric Plant In Service-Corporate** | 101/106 | **(14,857,896)** | **-** | **-** | **-** |
| 186 | | | | | | |
| 187 | **Electric Plant Purchased-Corporate** | 102 | | | | |
| 188 | | | | | | |
| 189 | **Electric Plant Acq Adj-Corporate** | 114 | | | | |
| 190 | | | | | | |
| 191 | **Total Corporate** | | **(14,857,896)** | **-** | **-** | **-** |
| 192 | | | | | | |
| 193 | **Total Electric Plant In Service w/Corporate** | **101/106** | **(57,680,411)** | **-** | **-** | **-** |
| 194 | | | | | | |
| 195 | **Electric Plant Purchased w/Corporate** | **102** | **-** | **-** | **-** | **-** |
| 196 | | | | | | |
| 197 | **Electric Plant Acq Adj w/Corporate** | **114** | **-** | **-** | **-** | **(832,053)** |
| 198 | | | | | | |
| 199 | **Total Plant In Service w/Corporate** | | **(57,680,411)** | **-** | **-** | **(832,053)** |

| | A | B | S | T | U | V |
|---|---|---|---|---|---|---|
| 1 | **Public Service Company of New Mexico** | | | | | |
| 2 | **Schedule B-2** | | | | | |
| 3 | **Original Cost of Plant In Service by Detail Account** | | | | | |
| 4 | **Base Period Ending 6/30/2026** | | | | | |
| 5 | **Test Period Ending 9/30/2028** | | | | | |
| 6 | **This schedule is sponsored by PNM Witness Gutierrez** | | | | | |
| 7 | **Utility Account** | **FERC** | **Linkage 1 Ending Balance Jun-27** | **Reference to PNM Exhibit RNG-4 WP Plant - B-3 - Base, Link, Test** | **Linkage 2 Beginning Balance Oct-26** | **Additions** |
| 8 | Steam Production Plant | | | | | |
| 9 | Land and Land Rights | 310 | 618,487 | | 618,487 | - |
| 10 | Land Right of Way | 310.1 | 22,368 | | 22,368 | - |
| 11 | Structures & Improvements | 311 | 32,098,547 | | 29,322,927 | 3,433,546 |
| 12 | Boiler Plant Equipment | 312 | 261,226,041 | | 262,241,975 | 2,503,326 |
| 13 | Turbogenerator Units | 314 | 68,347,301 | | 67,464,642 | 1,564,304 |
| 14 | Accessory Electric Equipment | 315 | 20,357,227 | | 20,419,700 | 99,581 |
| 15 | Computer Hardware | 315.01 | - | | - | - |
| 16 | Computer Software | 315.02 | 1,362,246 | | 1,362,246 | - |
| 17 | Communication Equipment | 315.03 | 334,053 | | 334,053 | - |
| 18 | Misc Power Plant Equipment | 316 | 28,094,897 | | 28,222,856 | 398,325 |
| 19 | Asset Retirement Costs - Steam | 317 | 10,249,476 | | 10,249,476 | - |
| 20 | **Total Steam Production Plant** | | **422,710,642** | Line 68, Col AM | **420,258,729** | **7,999,083** |
| 21 | | | | | | |
| 22 | Nuclear Production Plant | | | | | |
| 23 | Land and land rights | 320 | 439,822 | | 439,822 | - |
| 24 | Land Right of Way | 320.1 | 44,622 | | 44,622 | - |
| 25 | Structures and improvements | 321 | 207,907,610 | | 206,434,526 | 2,245,653 |
| 26 | Reactor plant equipment | 322 | 343,810,615 | | 337,108,354 | 10,105,440 |
| 27 | Turbogenerator units | 323 | 114,479,936 | | 114,854,813 | - |
| 28 | Accessory electric equipment | 324 | 60,804,757 | | 60,892,201 | - |
| 29 | Computer Hardware | 324.01 | - | | - | - |
| 30 | Computer Software | 324.02 | 13,918,613 | | 13,220,698 | 962,423 |
| 31 | Communication Equipment | 324.03 | 545,505 | | 429,186 | 160,404 |
| 32 | Misc power plant equipment | 325 | 73,266,262 | | 71,419,653 | 2,566,461 |
| 33 | Asset Retirement Costs-Nuclear | 326 | - | | - | |
| 34 | **Total Nuclear Production** | | **815,217,742** | Line 141, Col AM | **804,843,875** | **16,040,381** |
| 35 | | | | | | |
| 36 | Solar Production Plant | | | | | |

| | A | B | S | T | U | V |
|---|---|---|---|---|---|---|
| 1 | **Public Service Company of New Mexico** | | | | | |
| 2 | **Schedule B-2** | | | | | |
| 3 | **Original Cost of Plant In Service by Detail Account** | | | | | |
| 4 | **Base Period Ending 6/30/2026** | | | | | |
| 5 | **Test Period Ending 9/30/2028** | | | | | |
| 6 | **This schedule is sponsored by PNM Witness Gutierrez** | | | | | |
| 7 | **Utility Account** | **FERC** | **Linkage 1 Ending Balance Jun-27** | **Reference to PNM Exhibit RNG-4 WP Plant - B-3 - Base, Link, Test** | **Linkage 2 Beginning Balance Oct-26** | **Additions** |
| 37 | Land & Land Rights | 338.01 | 11,040,948 | | 11,040,948 | - |
| 38 | Structures and Improvements | 338.02 | 268,299 | | 268,299 | - |
| 39 | Solar Panels | 338.04 | 277,545,592 | | 437,158,839 | - |
| 40 | Collector System | 338.05 | 8,264,812 | | 8,264,812 | - |
| 41 | Solar Inverters | 338.07 | | | 10,127,593 | |
| 42 | Other Accessory Electrical Equipment | 338.08 | 33,903,100 | | 23,775,507 | - |
| 43 | Computer Hardware | 338.09 | 51,760 | | 51,760 | - |
| 44 | Computer Software | 338.10 | - | | - | - |
| 45 | Communication Equipment | 338.11 | 637,577 | | 637,577 | - |
| 46 | Misc. Power Plant Equipment | 338.12 | 5,228,178 | | 5,228,178 | - |
| 47 | **Total Solar Production** | | **336,940,266** | Line 248, Col AM | **496,553,513** | **-** |
| 48 | | | | | | |
| 49 | Other Production Plant | | | | | |
| 50 | Land and land rights | 340 | 7,079,884 | | 7,079,884 | - |
| 51 | Land Right of Way | 340.1 | 1,959,313 | | 1,959,313 | - |
| 52 | Structures and improvements | 341 | 95,430,524 | | 95,369,571 | 401,414 |
| 53 | Fuel holders,producrs,accessr | 342 | 129,241,209 | | 124,884,045 | 5,282,916 |
| 54 | Prime movers | 343 | - | | - | - |
| 55 | Generators | 344 | 262,104,784 | | 257,309,496 | 5,487,883 |
| 56 | Accessory electric equipment | 345 | 27,209,029 | | 24,045,903 | 3,468,415 |
| 57 | Computer hardware | 345.1 | - | | 53,885 | - |
| 58 | Computer software | 345.2 | 60,931 | | 60,931 | - |
| 59 | Communication equipment | 345.3 | 38,862 | | 38,862 | - |
| 60 | Misc power plant equipment | 346 | 48,773,422 | | 47,102,834 | 1,875,471 |
| 61 | ARO Other Production | 347 | 7,008,573 | | 7,008,573 | - |
| 62 | **Total Other Production** | | **578,906,531** | Line 351, Col AM | **564,913,298** | **16,516,099** |
| 63 | | | | | | |
| 64 | Energy Storage Plant | | | | | |
| 65 | Land & Land Rights | 387.01 | - | | - | - |

| | A | B | S | T | U | V |
|---|---|---|---|---|---|---|
| 1 | **Public Service Company of New Mexico** | | | | | |
| 2 | **Schedule B-2** | | | | | |
| 3 | **Original Cost of Plant In Service by Detail Account** | | | | | |
| 4 | **Base Period Ending 6/30/2026** | | | | | |
| 5 | **Test Period Ending 9/30/2028** | | | | | |
| 6 | **This schedule is sponsored by PNM Witness Gutierrez** | | | | | |
| 7 | **Utility Account** | **FERC** | **Linkage 1 Ending Balance Jun-27** | **Reference to PNM Exhibit RNG-4 WP Plant - B-3 - Base, Link, Test** | **Linkage 2 Beginning Balance Oct-26** | **Additions** |
| 66 | Structures & Improvements | 387.02 | 23,176,806 | | 23,176,805.65 | - |
| 67 | Energy Storage Equipment | 387.03 | 118,525,671 | | 43,118,825.08 | 165,189,297 |
| 68 | Collector System | 387.05 | 25,624,069 | | 25,624,069.08 | - |
| 69 | Generator Step-Up Transformers (GSU) | 387.06 | 59,151,201 | | 59,151,200.60 | - |
| 70 | Inverters | 387.07 | - | | - | - |
| 71 | Computer Hardware | 387.08 | 5,348,140 | | 5,348,140.30 | - |
| 72 | Computer Software | 387.09 | 965,150 | | 965,149.64 | - |
| 73 | Communication Equipment | 387.10 | 1,233,478 | | 1,233,478.11 | - |
| 74 | Misc. Energy Storage Equipment | 387.11 | 7,837,251 | | 7,837,250.58 | - |
| 75 | Asset Retirement Costs for Energy Storage | 387.12 | - | | - | - |
| 76 | **Total Energy Storage Plant** | | **241,861,764** | Line 397, Col AM | **166,454,919** | **165,189,297** |
| 77 | | | | | | |
| 78 | Transmission Plant | | | | | |
| 79 | Land and land rights | 350 | 82,646,570 | | 81,620,770 | 1,612,461 |
| 80 | Land Right of Way | 350.1 | 53,886,328 | | 53,886,328 | 95,590 |
| 81 | Computer Hardware | 351.1 | 17,903,133 | | 17,710,109 | 2,019,083 |
| 82 | Computer Software | 351.2 | 10,027,103 | | 9,284,724 | 742,378 |
| 83 | Communication Equipment | 351.3 | 52,426,043 | | 47,955,852 | 5,757,849 |
| 84 | Structures and improvements | 352 | 269,289,649 | | 248,834,102 | 22,684,356 |
| 85 | Station equipment | 353 | 1,046,468,698 | | 971,112,839 | 104,297,602 |
| 86 | Computer Hardware | 353.1 | 12,225,109 | | 12,217,078 | 66,388 |
| 87 | Towers and fixtures | 354 | 64,208,346 | | 64,241,809 | 189,691 |
| 88 | Poles and fixtures | 355 | 567,141,589 | | 559,070,073 | 12,292,708 |
| 89 | Overhead conductors, devices | 356 | 238,625,130 | | 233,841,512 | 5,711,431 |
| 90 | Underground conduit | 357 | 733,196 | | 185,394 | 547,802 |
| 91 | Roads and trails | 359 | 9,799,438 | | 9,800,302 | - |
| 92 | **Total Transmission Plant** | | **2,425,380,332** | Line 467, Col AM | **2,309,760,892** | **156,017,338** |
| 93 | | | | | | |
| 94 | Distribution Plant | | | | | |

| | A | B | S | T | U | V |
|---|---|---|---|---|---|---|
| 1 | **Public Service Company of New Mexico** | | | | | |
| 2 | **Schedule B-2** | | | | | |
| 3 | **Original Cost of Plant In Service by Detail Account** | | | | | |
| 4 | **Base Period Ending 6/30/2026** | | | | | |
| 5 | **Test Period Ending 9/30/2028** | | | | | |
| 6 | **This schedule is sponsored by PNM Witness Gutierrez** | | | | | |
| 7 | **Utility Account** | **FERC** | **Linkage 1 Ending Balance Jun-27** | **Reference to PNM Exhibit RNG-4 WP Plant - B-3 - Base, Link, Test** | **Linkage 2 Beginning Balance Oct-26** | **Additions** |
| 95 | Land and land rights | 360 | 10,606,766 | | 10,458,901 | 225,365 |
| 96 | Land Right of Way | 360.1 | 4,685,187 | | 2,917,202 | 1,767,985 |
| 97 | Structures and improvements | 361 | 76,695,729 | | 73,767,626 | 3,568,364 |
| 98 | Station equipment | 362 | 395,083,614 | | 339,237,410 | 61,745,376 |
| 99 | Computer Hardware | 363.1 | 17,744,064 | | 8,431,810 | 11,282,504 |
| 100 | Computer Software | 363.2 | 81,453,034 | | 54,155,723 | 33,208,059 |
| 101 | Communication Equipment | 363.3 | 32,815,768 | | 21,659,662 | 13,126,362 |
| 102 | Poles, towers and fixtures | 364 | 516,506,969 | | 482,065,536 | 42,288,531 |
| 103 | Overhead conductors, devices | 365 | 345,400,445 | | 308,968,672 | 41,413,259 |
| 104 | Underground conduit | 366 | 214,627,888 | | 202,516,945 | 15,537,627 |
| 105 | Undergrnd conductors, devices | 367 | 507,661,817 | | 486,479,606 | 27,411,873 |
| 106 | Line transformers | 368 | 301,051,426 | | 294,004,221 | 11,124,438 |
| 107 | Services | 369 | 108,005,856 | | 104,327,497 | 5,320,678 |
| 108 | Services - Underground | 369.1 | 195,647,328 | | 183,260,085 | 16,848,815 |
| 109 | Meters | 370 | 60,102,800 | | 67,942,944 | 5,143,283 |
| 110 | Meters - Grid Mod | 370.4 | 42,601,100 | | 2,692,873 | 51,729,723 |
| 111 | Installs customer premise | 371 | 9,151,530 | | 9,151,530 | - |
| 112 | Leased Flood Lighting | 371.1 | 307,353 | | 307,353 | - |
| 113 | Street lighting,signal system | 373 | 35,385,056 | | 31,900,820 | 4,517,046 |
| 114 | Asset Retirement Costs-Distr | 374 | - | | - | - |
| 115 | **Total Distribution Plant** | | **2,955,533,729** | Line 686, Col AM | **2,684,246,414** | **346,259,289** |
| 116 | | | | | | |
| 117 | General Plant | | | | | |
| 118 | Miscellaneous Intangible Plant | 303 | - | | - | - |
| 119 | Land and land rights | 389 | 1,937,568 | | 1,937,568 | - |
| 120 | Structures and improvements | 390 | 77,563,289 | | 74,064,560 | 3,954,225 |
| 121 | Structures and improvements-BPS Remodeling | 390.1 | 5,880,974 | | 5,898,069 | 2,828 |
| 122 | Structures and improvements-BPS Office Building | 390.2 | 5,945,142 | | 5,945,142 | - |
| 123 | Office furniture, equipment | 391 | 5,054,332 | | 4,965,747 | 167,128 |

| | A | B | S | T | U | V |
|---|---|---|---|---|---|---|
| 1 | **Public Service Company of New Mexico** | | | | | |
| 2 | **Schedule B-2** | | | | | |
| 3 | **Original Cost of Plant In Service by Detail Account** | | | | | |
| 4 | **Base Period Ending 6/30/2026** | | | | | |
| 5 | **Test Period Ending 9/30/2028** | | | | | |
| 6 | **This schedule is sponsored by PNM Witness Gutierrez** | | | | | |
| 7 | **Utility Account** | **FERC** | **Linkage 1 Ending Balance Jun-27** | **Reference to PNM Exhibit RNG-4 WP Plant - B-3 - Base, Link, Test** | **Linkage 2 Beginning Balance Oct-26** | **Additions** |
| 124 | Office Furniture and Equipment - PC System | 391.1 | - | | - | - |
| 125 | Office Furniture and Equipment - PC's | 391.2 | - | | - | - |
| 126 | Computer Hardware | 391.3 | - | | - | - |
| 127 | Computer Hardware - Solar | 391.5 | - | | - | - |
| 128 | Computer Hardware | 391.7 | - | | - | - |
| 129 | Transportation equipment | 392 | 4,801,881 | | 4,444,379 | 384,397 |
| 130 | Transportation equipment-Heavy | 392.1 | 4,873,060 | | 4,970,898 | 96,410 |
| 131 | Transportation equipment-Trailer | 392.2 | 8,574,374 | | 8,515,418 | 61,422 |
| 132 | Transportation Equipment - Leaseback | 392.4 | - | | - | - |
| 133 | Stores equipment | 393 | 97,939 | | 97,939 | - |
| 134 | Tools, shop, garage equipment | 394 | 20,606,090 | | 20,412,530 | 899,531 |
| 135 | Laboratory equipment | 395 | 206,265 | | 206,265 | - |
| 136 | Power operated equipment | 396 | 7,482,646 | | 7,423,830 | 69,474 |
| 137 | Computer Hardware | 397.1 | 860,459 | | 2,390,134 | 1,414 |
| 138 | Computer Software | 397.2 | 34,139,229 | | 33,256,735 | 882,494 |
| 139 | Communication Equipment | 397.3 | - | | - | - |
| 140 | Miscellaneous equipment | 398 | 1,823,135 | | 1,779,179 | 73,960 |
| 141 | ARO General Plant | 399.1 | 19,473 | | 19,473 | - |
| 142 | **Total General Plant** | | **179,865,856** | Lines 744, Col AM | **176,327,864** | **6,593,282** |
| 143 | | | | | | |
| 144 | **Total Electric Plant In Service** | 101/106 | **7,956,416,863** | Line 746, Col AM | **7,623,359,505** | **714,614,769** |
| 145 | | | | | | |
| 146 | **Electric Plant Purchased** | **102** | **-** | | | |
| 147 | | | | | | |
| 148 | Acq Adj - Palo Verde Unit 1&2 (Drexel) | 114 | - | | - | **-** |
| 149 | Acq Adj - Palo Verde Unit 2 (First Chicago) | 114 | 15,531,668 | | 16,155,707 | **-** |
| 150 | Acq Adj - (EIP) | 114 | - | | - | **-** |
| 151 | **Electric Plant Acq Adj** | 114 | **15,531,668** | Line 753, Col AM | **16,155,707** | - |
| 152 | | | | | | |

| | A | B | S | T | U | V |
|---|---|---|---|---|---|---|
| 1 | **Public Service Company of New Mexico** | | | | | |
| 2 | **Schedule B-2** | | | | | |
| 3 | **Original Cost of Plant In Service by Detail Account** | | | | | |
| 4 | **Base Period Ending 6/30/2026** | | | | | |
| 5 | **Test Period Ending 9/30/2028** | | | | | |
| 6 | **This schedule is sponsored by PNM Witness Gutierrez** | | | | | |
| 7 | **Utility Account** | **FERC** | **Linkage 1 Ending Balance Jun-27** | **Reference to PNM Exhibit RNG-4 WP Plant - B-3 - Base, Link, Test** | **Linkage 2 Beginning Balance Oct-26** | **Additions** |
| 153 | **Total Plant** | | **7,971,948,530** | Line 755, Col AM | **7,639,515,212** | **714,614,769** |
| 154 | | | (0) | | | |
| 155 | Corporate Plant - Unallocated | | | | | |
| 156 | Miscellaneous Intangible Plant | 303 | - | | - | - |
| 157 | Land and Land Rights | 389 | 5,133,327 | | 5,133,327 | - |
| 158 | Structures and Improvements | 390 | 81,499,817 | | 73,546,632 | 9,444,182 |
| 159 | Bulk Power Office Building Remodeling | 390.1 | - | | - | - |
| 160 | Bulk Power Office Building | 390.2 | - | | - | - |
| 161 | Office Furniture and Equipment | 391 | 1,543,771 | | 1,119,007 | 447,326 |
| 162 | Office Furniture and Equipment - PC System | 391.1 | - | | - | - |
| 163 | Office Furniture and Equipment - PC's | 391.2 | - | | - | - |
| 164 | Computer Hardware | 391.3 | - | | - | - |
| 165 | Computer Hardware - Solar | 391.5 | - | | - | - |
| 166 | Computer Hardware | 391.7 | - | | - | - |
| 167 | Transportation Equipment - Light | 392 | 350,330 | | 350,330 | - |
| 168 | Transportation Equipment - Heavy | 392.1 | 52,320 | | 52,320 | - |
| 169 | Transportation Equipment - Trailers | 392.2 | 10,272 | | 10,272 | - |
| 170 | Transportation Equipment - Leaseback | 392.4 | (144) | | (36) | - |
| 171 | Stores Equipment | 393 | - | | - | - |
| 172 | Tools, Shop & Garage Equipment | 394 | 412,720 | | 592,267 | 1,876 |
| 173 | Laboratory Equipment | 395 | - | | - | - |
| 174 | Power Operated Equipment | 396 | 26,134 | | 26,134 | - |
| 175 | Communication Equipment | 397 | - | | - | - |
| 176 | Computer Hardware | 397.1 | 31,383,481 | | 39,615,494 | 4,573,724 |
| 177 | Computer Software | 397.2 | 248,044,581 | | 210,303,419 | 45,542,149 |
| 178 | Communication Equipment | 397.3 | 3,768,504 | | 5,097,570 | - |
| 179 | Communication Equipment | 397.2 | - | | - | - |
| 180 | Communication Equipment | 397.3 | - | | - | - |
| 181 | Miscellaneous Equipment | 398 | - | | - | - |

| | A | B | S | T | U | V |
|---|---|---|---|---|---|---|
| 1 | **Public Service Company of New Mexico** | | | | | |
| 2 | **Schedule B-2** | | | | | |
| 3 | **Original Cost of Plant In Service by Detail Account** | | | | | |
| 4 | **Base Period Ending 6/30/2026** | | | | | |
| 5 | **Test Period Ending 9/30/2028** | | | | | |
| 6 | **This schedule is sponsored by PNM Witness Gutierrez** | | | | | |
| 7 | **Utility Account** | **FERC** | **Linkage 1 Ending Balance Jun-27** | **Reference to PNM Exhibit RNG-4 WP Plant - B-3 - Base, Link, Test** | **Linkage 2 Beginning Balance Oct-26** | **Additions** |
| 182 | ARO General Plant-1 | 399 | - | | - | - |
| 183 | **Total Corporate** | | **372,225,114** | Line 786, Col AM | **335,846,737** | **60,009,258** |
| 184 | | | | | | |
| 185 | **Total Electric Plant In Service-Corporate** | 101/106 | **372,225,114** | | **335,846,737** | **60,009,258** |
| 186 | | | | | | |
| 187 | **Electric Plant Purchased-Corporate** | 102 | **-** | | | |
| 188 | | | | | | |
| 189 | **Electric Plant Acq Adj-Corporate** | 114 | - | | | |
| 190 | | | | | | |
| 191 | **Total Corporate** | | **372,225,114** | | **335,846,737** | **60,009,258** |
| 192 | | | | | | |
| 193 | **Total Electric Plant In Service w/Corporate** | **101/106** | **8,328,641,977** | Line 788, Col AM | **7,959,206,242** | **774,624,027** |
| 194 | | | | | | |
| 195 | **Electric Plant Purchased w/Corporate** | **102** | **-** | | **-** | **-** |
| 196 | | | | | | |
| 197 | **Electric Plant Acq Adj w/Corporate** | **114** | **15,531,668** | Line 792, Col AM | **16,155,707** | **-** |
| 198 | | | | | | |
| 199 | **Total Plant In Service w/Corporate** | | **8,344,173,644** | Line 794, Col AM | **7,975,361,949** | **774,624,027** |

| | A | B | W | X | Y | Z |
|---|---|---|---|---|---|---|
| 1 | **Public Service Company of New Mexico** | | | | | |
| 2 | **Schedule B-2** | | | | | |
| 3 | **Original Cost of Plant In Service by Detail Account** | | | | | |
| 4 | **Base Period Ending 6/30/2026** | | | | | |
| 5 | **Test Period Ending 9/30/2028** | | | | | |
| 6 | **This schedule is sponsored by PNM Witness Gutierrez** | | | | | |
| 7 | **Utility Account** | **FERC** | **Retirements** | **Adjustments** | **Transfers** | **Other DR/CR** |
| 8 | Steam Production Plant | | | | | |
| 9 | Land and Land Rights | 310 | - | - | - | - |
| 10 | Land Right of Way | 310.1 | - | - | - | - |
| 11 | Structures & Improvements | 311 | (400,332) | - | - | - |
| 12 | Boiler Plant Equipment | 312 | (3,863,712) | - | - | - |
| 13 | Turbogenerator Units | 314 | (412,332) | - | - | - |
| 14 | Accessory Electric Equipment | 315 | (168,840) | - | - | - |
| 15 | Computer Hardware | 315.01 | - | - | - | - |
| 16 | Computer Software | 315.02 | - | - | - | - |
| 17 | Communication Equipment | 315.03 | - | - | - | - |
| 18 | Misc Power Plant Equipment | 316 | (512,784) | - | - | - |
| 19 | Asset Retirement Costs - Steam | 317 | - | - | - | - |
| 20 | **Total Steam Production Plant** | | **(5,358,000)** | **-** | **-** | **-** |
| 21 | | | | | | |
| 22 | Nuclear Production Plant | | | | | |
| 23 | Land and land rights | 320 | - | | | |
| 24 | Land Right of Way | 320.1 | - | | | |
| 25 | Structures and improvements | 321 | (207,180) | | | |
| 26 | Reactor plant equipment | 322 | (834,468) | | | |
| 27 | Turbogenerator units | 323 | (499,836) | | | |
| 28 | Accessory electric equipment | 324 | (116,592) | | | |
| 29 | Computer Hardware | 324.01 | - | | | |
| 30 | Computer Software | 324.02 | - | | | |
| 31 | Communication Equipment | 324.03 | - | | | |
| 32 | Misc power plant equipment | 325 | (19,332) | | | |
| 33 | Asset Retirement Costs-Nuclear | 326 | | | | |
| 34 | **Total Nuclear Production** | | **(1,677,408)** | **-** | **-** | **-** |
| 35 | | | | | | |
| 36 | Solar Production Plant | | | | | |

| | A | B | W | X | Y | Z |
|---|---|---|---|---|---|---|
| 1 | **Public Service Company of New Mexico** | | | | | |
| 2 | **Schedule B-2** | | | | | |
| 3 | **Original Cost of Plant In Service by Detail Account** | | | | | |
| 4 | **Base Period Ending 6/30/2026** | | | | | |
| 5 | **Test Period Ending 9/30/2028** | | | | | |
| 6 | **This schedule is sponsored by PNM Witness Gutierrez** | | | | | |
| 7 | **Utility Account** | **FERC** | **Retirements** | **Adjustments** | **Transfers** | **Other DR/CR** |
| 37 | Land & Land Rights | 338.01 | - | - | - | - |
| 38 | Structures and Improvements | 338.02 | - | - | - | - |
| 39 | Solar Panels | 338.04 | - | - | - | - |
| 40 | Collector System | 338.05 | - | - | - | - |
| 41 | Solar Inverters | 338.07 | | | | |
| 42 | Other Accessory Electrical Equipment | 338.08 | - | - | - | - |
| 43 | Computer Hardware | 338.09 | - | - | - | - |
| 44 | Computer Software | 338.10 | - | - | - | - |
| 45 | Communication Equipment | 338.11 | - | - | - | - |
| 46 | Misc. Power Plant Equipment | 338.12 | - | - | - | - |
| 47 | **Total Solar Production** | | **-** | **-** | **-** | **-** |
| 48 | | | | | | |
| 49 | Other Production Plant | | | | | |
| 50 | Land and land rights | 340 | - | - | - | - |
| 51 | Land Right of Way | 340.1 | - | - | - | - |
| 52 | Structures and improvements | 341 | (453,948) | - | - | - |
| 53 | Fuel holders,producrs,accessr | 342 | (95,004) | - | - | - |
| 54 | Prime movers | 343 | - | - | - | - |
| 55 | Generators | 344 | (923,460) | - | - | - |
| 56 | Accessory electric equipment | 345 | (407,052) | - | - | - |
| 57 | Computer hardware | 345.1 | (53,885) | - | - | - |
| 58 | Computer software | 345.2 | - | - | - | - |
| 59 | Communication equipment | 345.3 | - | - | - | - |
| 60 | Misc power plant equipment | 346 | (207,504) | - | - | - |
| 61 | ARO Other Production | 347 | - | - | - | - |
| 62 | **Total Other Production** | | **(2,140,853)** | **-** | **-** | **-** |
| 63 | | | | | | |
| 64 | Energy Storage Plant | | | | | |
| 65 | Land & Land Rights | 387.01 | - | - | - | - |

| | A | B | W | X | Y | Z |
|---|---|---|---|---|---|---|
| 1 | **Public Service Company of New Mexico** | | | | | |
| 2 | **Schedule B-2** | | | | | |
| 3 | **Original Cost of Plant In Service by Detail Account** | | | | | |
| 4 | **Base Period Ending 6/30/2026** | | | | | |
| 5 | **Test Period Ending 9/30/2028** | | | | | |
| 6 | **This schedule is sponsored by PNM Witness Gutierrez** | | | | | |
| 7 | **Utility Account** | **FERC** | **Retirements** | **Adjustments** | **Transfers** | **Other DR/CR** |
| 66 | Structures & Improvements | 387.02 | - | - | - | - |
| 67 | Energy Storage Equipment | 387.03 | - | - | - | - |
| 68 | Collector System | 387.05 | - | - | - | - |
| 69 | Generator Step-Up Transformers (GSU) | 387.06 | - | - | - | - |
| 70 | Inverters | 387.07 | - | - | - | - |
| 71 | Computer Hardware | 387.08 | - | - | - | - |
| 72 | Computer Software | 387.09 | - | - | - | - |
| 73 | Communication Equipment | 387.10 | - | - | - | - |
| 74 | Misc. Energy Storage Equipment | 387.11 | - | - | - | - |
| 75 | Asset Retirement Costs for Energy Storage | 387.12 | - | - | - | - |
| 76 | **Total Energy Storage Plant** | | **-** | **-** | **-** | **-** |
| 77 | | | | | | |
| 78 | Transmission Plant | | | | | |
| 79 | Land and land rights | 350 | - | - | - | - |
| 80 | Land Right of Way | 350.1 | - | - | - | - |
| 81 | Computer Hardware | 351.1 | (1,632,273) | - | - | - |
| 82 | Computer Software | 351.2 | - | - | - | - |
| 83 | Communication Equipment | 351.3 | (610,837) | - | - | - |
| 84 | Structures and improvements | 352 | (202,848) | - | - | - |
| 85 | Station equipment | 353 | (2,959,416) | - | - | - |
| 86 | Computer Hardware | 353.1 | (46,320) | - | - | - |
| 87 | Towers and fixtures | 354 | (297,540) | - | - | - |
| 88 | Poles and fixtures | 355 | (1,398,804) | - | - | - |
| 89 | Overhead conductors, devices | 356 | (200,748) | - | - | - |
| 90 | Underground conduit | 357 | - | - | - | - |
| 91 | Roads and trails | 359 | (1,152) | - | - | - |
| 92 | **Total Transmission Plant** | | **(7,349,938)** | **-** | **-** | **-** |
| 93 | | | | | | |
| 94 | Distribution Plant | | | | | |

| | A | B | W | X | Y | Z |
|---|---|---|---|---|---|---|
| 1 | **Public Service Company of New Mexico** | | | | | |
| 2 | **Schedule B-2** | | | | | |
| 3 | **Original Cost of Plant In Service by Detail Account** | | | | | |
| 4 | **Base Period Ending 6/30/2026** | | | | | |
| 5 | **Test Period Ending 9/30/2028** | | | | | |
| 6 | **This schedule is sponsored by PNM Witness Gutierrez** | | | | | |
| 7 | **Utility Account** | **FERC** | **Retirements** | **Adjustments** | **Transfers** | **Other DR/CR** |
| 95 | Land and land rights | 360 | - | - | - | - |
| 96 | Land Right of Way | 360.1 | - | - | - | - |
| 97 | Structures and improvements | 361 | (112,980) | - | - | - |
| 98 | Station equipment | 362 | (1,079,424) | - | - | - |
| 99 | Computer Hardware | 363.1 | - | - | - | - |
| 100 | Computer Software | 363.2 | - | - | - | - |
| 101 | Communication Equipment | 363.3 | (60,348) | - | - | - |
| 102 | Poles, towers and fixtures | 364 | (3,668,676) | - | - | - |
| 103 | Overhead conductors, devices | 365 | (1,808,196) | - | - | - |
| 104 | Underground conduit | 366 | (562,464) | - | - | - |
| 105 | Undergrnd conductors, devices | 367 | (2,115,648) | - | - | - |
| 106 | Line transformers | 368 | (1,284,948) | - | - | - |
| 107 | Services | 369 | (373,800) | - | - | - |
| 108 | Services - Underground | 369.1 | (198,228) | - | - | - |
| 109 | Meters | 370 | (17,604,907) | - | - | - |
| 110 | Meters - Grid Mod | 370.4 | - | - | - | - |
| 111 | Installs customer premise | 371 | - | - | - | - |
| 112 | Leased Flood Lighting | 371.1 | - | - | - | - |
| 113 | Street lighting,signal system | 373 | (260,688) | - | - | - |
| 114 | Asset Retirement Costs-Distr | 374 | - | - | - | - |
| 115 | **Total Distribution Plant** | | **(29,130,307)** | **-** | **-** | **-** |
| 116 | | | | | | |
| 117 | General Plant | | | | | |
| 118 | Miscellaneous Intangible Plant | 303 | - | - | - | - |
| 119 | Land and land rights | 389 | - | - | - | - |
| 120 | Structures and improvements | 390 | (384,996) | - | - | - |
| 121 | Structures and improvements-BPS Remodeling | 390.1 | (25,932) | - | - | - |
| 122 | Structures and improvements-BPS Office Building | 390.2 | - | - | - | - |
| 123 | Office furniture, equipment | 391 | (71,589) | - | - | - |

| | A | B | W | X | Y | Z |
|---|---|---|---|---|---|---|
| 1 | **Public Service Company of New Mexico** | | | | | |
| 2 | **Schedule B-2** | | | | | |
| 3 | **Original Cost of Plant In Service by Detail Account** | | | | | |
| 4 | **Base Period Ending 6/30/2026** | | | | | |
| 5 | **Test Period Ending 9/30/2028** | | | | | |
| 6 | **This schedule is sponsored by PNM Witness Gutierrez** | | | | | |
| 7 | **Utility Account** | **FERC** | **Retirements** | **Adjustments** | **Transfers** | **Other DR/CR** |
| 124 | Office Furniture and Equipment - PC System | 391.1 | - | - | - | - |
| 125 | Office Furniture and Equipment - PC's | 391.2 | - | - | - | - |
| 126 | Computer Hardware | 391.3 | - | - | - | - |
| 127 | Computer Hardware - Solar | 391.5 | - | - | - | - |
| 128 | Computer Hardware | 391.7 | - | - | - | - |
| 129 | Transportation equipment | 392 | (33,828) | - | - | - |
| 130 | Transportation equipment-Heavy | 392.1 | (258,996) | - | - | - |
| 131 | Transportation equipment-Trailer | 392.2 | (3,288) | - | - | - |
| 132 | Transportation Equipment - Leaseback | 392.4 | - | - | - | - |
| 133 | Stores equipment | 393 | - | - | - | - |
| 134 | Tools, shop, garage equipment | 394 | (561,029) | - | - | - |
| 135 | Laboratory equipment | 395 | - | - | - | - |
| 136 | Power operated equipment | 396 | (3,240) | - | - | - |
| 137 | Computer Hardware | 397.1 | (1,530,853) | - | - | - |
| 138 | Computer Software | 397.2 | - | - | - | - |
| 139 | Communication Equipment | 397.3 | - | - | - | - |
| 140 | Miscellaneous equipment | 398 | (30,004) | - | - | - |
| 141 | ARO General Plant | 399.1 | - | - | - | - |
| 142 | **Total General Plant** | | **(2,903,755)** | **-** | **-** | **-** |
| 143 | | | | | | |
| 144 | **Total Electric Plant In Service** | 101/106 | **(48,560,260)** | **-** | **-** | **-** |
| 145 | | | | | | |
| 146 | **Electric Plant Purchased** | **102** | | | | |
| 147 | | | | | | |
| 148 | Acq Adj - Palo Verde Unit 1&2 (Drexel) | 114 | **-** | **-** | **-** | - |
| 149 | Acq Adj - Palo Verde Unit 2 (First Chicago) | 114 | **-** | **-** | **-** | (832,053) |
| 150 | Acq Adj - (EIP) | 114 | **-** | **-** | **-** | - |
| 151 | **Electric Plant Acq Adj** | 114 | **-** | - | - | **(832,053)** |
| 152 | | | | | | |

| | A | B | W | X | Y | Z |
|---|---|---|---|---|---|---|
| 1 | **Public Service Company of New Mexico** | | | | | |
| 2 | **Schedule B-2** | | | | | |
| 3 | **Original Cost of Plant In Service by Detail Account** | | | | | |
| 4 | **Base Period Ending 6/30/2026** | | | | | |
| 5 | **Test Period Ending 9/30/2028** | | | | | |
| 6 | **This schedule is sponsored by PNM Witness Gutierrez** | | | | | |
| 7 | **Utility Account** | **FERC** | **Retirements** | **Adjustments** | **Transfers** | **Other DR/CR** |
| 153 | **Total Plant** | | **(48,560,260)** | **-** | **-** | **(832,053)** |
| 154 | | | | | | |
| 155 | Corporate Plant - Unallocated | | | | | |
| 156 | Miscellaneous Intangible Plant | 303 | - | - | - | - |
| 157 | Land and Land Rights | 389 | - | - | - | - |
| 158 | Structures and Improvements | 390 | (544,032) | - | - | - |
| 159 | Bulk Power Office Building Remodeling | 390.1 | - | - | - | - |
| 160 | Bulk Power Office Building | 390.2 | - | - | - | - |
| 161 | Office Furniture and Equipment | 391 | - | - | - | - |
| 162 | Office Furniture and Equipment - PC System | 391.1 | - | - | - | - |
| 163 | Office Furniture and Equipment - PC's | 391.2 | - | - | - | - |
| 164 | Computer Hardware | 391.3 | - | - | - | - |
| 165 | Computer Hardware - Solar | 391.5 | - | - | - | - |
| 166 | Computer Hardware | 391.7 | - | - | - | - |
| 167 | Transportation Equipment - Light | 392 | - | - | - | - |
| 168 | Transportation Equipment - Heavy | 392.1 | - | - | - | - |
| 169 | Transportation Equipment - Trailers | 392.2 | - | - | - | - |
| 170 | Transportation Equipment - Leaseback | 392.4 | (144) | - | - | - |
| 171 | Stores Equipment | 393 | - | - | - | - |
| 172 | Tools, Shop & Garage Equipment | 394 | (181,424) | - | - | - |
| 173 | Laboratory Equipment | 395 | - | - | - | - |
| 174 | Power Operated Equipment | 396 | - | - | - | - |
| 175 | Communication Equipment | 397 | - | - | - | - |
| 176 | Computer Hardware | 397.1 | (12,803,231) | - | - | - |
| 177 | Computer Software | 397.2 | - | - | - | - |
| 178 | Communication Equipment | 397.3 | (1,329,066) | - | - | - |
| 179 | Communication Equipment | 397.2 | - | - | - | - |
| 180 | Communication Equipment | 397.3 | - | - | - | - |
| 181 | Miscellaneous Equipment | 398 | - | - | - | - |

| | A | B | W | X | Y | Z |
|---|---|---|---|---|---|---|
| 1 | **Public Service Company of New Mexico** | | | | | |
| 2 | **Schedule B-2** | | | | | |
| 3 | **Original Cost of Plant In Service by Detail Account** | | | | | |
| 4 | **Base Period Ending 6/30/2026** | | | | | |
| 5 | **Test Period Ending 9/30/2028** | | | | | |
| 6 | **This schedule is sponsored by PNM Witness Gutierrez** | | | | | |
| 7 | **Utility Account** | **FERC** | **Retirements** | **Adjustments** | **Transfers** | **Other DR/CR** |
| 182 | ARO General Plant-1 | 399 | - | - | - | - |
| 183 | **Total Corporate** | | **(14,857,896)** | **-** | **-** | **-** |
| 184 | | | | | | |
| 185 | **Total Electric Plant In Service-Corporate** | 101/106 | **(14,857,896)** | **-** | **-** | **-** |
| 186 | | | | | | |
| 187 | **Electric Plant Purchased-Corporate** | 102 | | | | |
| 188 | | | | | | |
| 189 | **Electric Plant Acq Adj-Corporate** | 114 | | | | |
| 190 | | | | | | |
| 191 | **Total Corporate** | | **(14,857,896)** | **-** | **-** | **-** |
| 192 | | | | | | |
| 193 | **Total Electric Plant In Service w/Corporate** | **101/106** | **(63,418,156)** | **-** | **-** | **-** |
| 194 | | | | | | |
| 195 | **Electric Plant Purchased w/Corporate** | **102** | **-** | **-** | **-** | **-** |
| 196 | | | | | | |
| 197 | **Electric Plant Acq Adj w/Corporate** | **114** | **-** | **-** | **-** | **(832,053)** |
| 198 | | | | | | |
| 199 | **Total Plant In Service w/Corporate** | | **(63,418,156)** | **-** | **-** | **(832,053)** |

| | A | B | AA | AB | AC | AD |
|---|---|---|---|---|---|---|
| 1 | **Public Service Company of New Mexico** | | | | | |
| 2 | **Schedule B-2** | | | | | |
| 3 | **Original Cost of Plant In Service by Detail Account** | | | | | |
| 4 | **Base Period Ending 6/30/2026** | | | | | |
| 5 | **Test Period Ending 9/30/2028** | | | | | |
| 6 | **This schedule is sponsored by PNM Witness Gutierrez** | | | | | |
| 7 | **Utility Account** | **FERC** | **Linkage 2 Ending Balance Sept-27** | **Reference to PNM Exhibit RNG-4 WP Plant - B-3 - Base, Link, Test** | **Test Period Beginning Balance Oct-27** | **Additions** |
| 8 | Steam Production Plant | | | | | |
| 9 | Land and Land Rights | 310 | 618,487 | | 618,487 | - |
| 10 | Land Right of Way | 310.1 | 22,368 | | 22,368 | - |
| 11 | Structures & Improvements | 311 | 32,356,141 | | 32,356,141 | 6,754,192 |
| 12 | Boiler Plant Equipment | 312 | 260,881,590 | | 260,881,590 | 5,609,860 |
| 13 | Turbogenerator Units | 314 | 68,616,614 | | 68,616,614 | 3,475,215 |
| 14 | Accessory Electric Equipment | 315 | 20,350,441 | | 20,350,441 | 243,497 |
| 15 | Computer Hardware | 315.01 | - | | - | - |
| 16 | Computer Software | 315.02 | 1,362,246 | | 1,362,246 | - |
| 17 | Communication Equipment | 315.03 | 334,053 | | 334,053 | - |
| 18 | Misc Power Plant Equipment | 316 | 28,108,397 | | 28,108,397 | 973,989 |
| 19 | Asset Retirement Costs - Steam | 317 | 10,249,476 | | 10,249,476 | - |
| 20 | **Total Steam Production Plant** | | **422,899,812** | Line 68, Col AP | **422,899,812** | **17,056,754** |
| 21 | | | | | | |
| 22 | Nuclear Production Plant | | | | | |
| 23 | Land and land rights | 320 | 439,822 | | 439,822 | - |
| 24 | Land Right of Way | 320.1 | 44,622 | | 44,622 | - |
| 25 | Structures and improvements | 321 | 208,473,000 | | 208,473,000 | 3,819,933 |
| 26 | Reactor plant equipment | 322 | 346,379,326 | | 346,379,326 | 17,189,697 |
| 27 | Turbogenerator units | 323 | 114,354,977 | | 114,354,977 | - |
| 28 | Accessory electric equipment | 324 | 60,775,609 | | 60,775,609 | - |
| 29 | Computer Hardware | 324.01 | - | | - | - |
| 30 | Computer Software | 324.02 | 14,183,120 | | 14,183,120 | 1,637,114 |
| 31 | Communication Equipment | 324.03 | 589,590 | | 589,590 | 272,852 |
| 32 | Misc power plant equipment | 325 | 73,966,782 | | 73,966,782 | 4,365,613 |
| 33 | Asset Retirement Costs-Nuclear | 326 | | | - | - |
| 34 | **Total Nuclear Production** | | **819,206,848** | Line 141, Col AP | **819,206,848** | **27,285,209** |
| 35 | | | | | | |
| 36 | Solar Production Plant | | | | | |

| | A | B | AA | AB | AC | AD |
|---|---|---|---|---|---|---|
| 1 | **Public Service Company of New Mexico** | | | | | |
| 2 | **Schedule B-2** | | | | | |
| 3 | **Original Cost of Plant In Service by Detail Account** | | | | | |
| 4 | **Base Period Ending 6/30/2026** | | | | | |
| 5 | **Test Period Ending 9/30/2028** | | | | | |
| 6 | **This schedule is sponsored by PNM Witness Gutierrez** | | | | | |
| 7 | **Utility Account** | **FERC** | **Linkage 2 Ending Balance Sept-27** | **Reference to PNM Exhibit RNG-4 WP Plant - B-3 - Base, Link, Test** | **Test Period Beginning Balance Oct-27** | **Additions** |
| 37 | Land & Land Rights | 338.01 | 11,040,948 | | 11,040,948 | - |
| 38 | Structures and Improvements | 338.02 | 268,299 | | 268,299 | - |
| 39 | Solar Panels | 338.04 | 437,158,839 | | 437,158,839 | 3,802,679 |
| 40 | Collector System | 338.05 | 8,264,812 | | 8,264,812 | - |
| 41 | Solar Inverters | 338.07 | 10,127,593 | | 10,127,593 | |
| 42 | Other Accessory Electrical Equipment | 338.08 | 23,775,507 | | 23,775,507 | - |
| 43 | Computer Hardware | 338.09 | 51,760 | | 51,760 | - |
| 44 | Computer Software | 338.10 | - | | - | - |
| 45 | Communication Equipment | 338.11 | 637,577 | | 637,577 | - |
| 46 | Misc. Power Plant Equipment | 338.12 | 5,228,178 | | 5,228,178 | - |
| 47 | **Total Solar Production** | | **496,553,513** | Line 248, Col AP | **496,553,513** | **3,802,679** |
| 48 | | | | | | |
| 49 | Other Production Plant | | | | | |
| 50 | Land and land rights | 340 | 7,079,884 | | 7,079,884 | - |
| 51 | Land Right of Way | 340.1 | 1,959,313 | | 1,959,313 | - |
| 52 | Structures and improvements | 341 | 95,317,037 | | 95,317,037 | 406,944 |
| 53 | Fuel holders,producrs,accessr | 342 | 130,071,957 | | 130,071,957 | 848,381 |
| 54 | Prime movers | 343 | - | | - | - |
| 55 | Generators | 344 | 261,873,919 | | 261,873,919 | 11,553,050 |
| 56 | Accessory electric equipment | 345 | 27,107,266 | | 27,107,266 | 1,233,506 |
| 57 | Computer hardware | 345.1 | - | | - | - |
| 58 | Computer software | 345.2 | 60,931 | | 60,931 | - |
| 59 | Communication equipment | 345.3 | 38,862 | | 38,862 | - |
| 60 | Misc power plant equipment | 346 | 48,770,801 | | 48,770,801 | 2,521,882 |
| 61 | ARO Other Production | 347 | 7,008,573 | | 7,008,573 | - |
| 62 | **Total Other Production** | | **579,288,544** | Line 351, Col AP | **579,288,544** | **16,563,763** |
| 63 | | | | | | |
| 64 | Energy Storage Plant | | | | | |
| 65 | Land & Land Rights | 387.01 | - | | - | - |

| | A | B | AA | AB | AC | AD |
|---|---|---|---|---|---|---|
| 1 | **Public Service Company of New Mexico** | | | | | |
| 2 | **Schedule B-2** | | | | | |
| 3 | **Original Cost of Plant In Service by Detail Account** | | | | | |
| 4 | **Base Period Ending 6/30/2026** | | | | | |
| 5 | **Test Period Ending 9/30/2028** | | | | | |
| 6 | **This schedule is sponsored by PNM Witness Gutierrez** | | | | | |
| 7 | **Utility Account** | **FERC** | **Linkage 2 Ending Balance Sept-27** | **Reference to PNM Exhibit RNG-4 WP Plant - B-3 - Base, Link, Test** | **Test Period Beginning Balance Oct-27** | **Additions** |
| 66 | Structures & Improvements | 387.02 | 23,176,806 | | 23,176,806 | - |
| 67 | Energy Storage Equipment | 387.03 | 208,308,122 | | 208,308,122 | 2,139,007 |
| 68 | Collector System | 387.05 | 25,624,069 | | 25,624,069 | - |
| 69 | Generator Step-Up Transformers (GSU) | 387.06 | 59,151,201 | | 59,151,201 | - |
| 70 | Inverters | 387.07 | - | | - | - |
| 71 | Computer Hardware | 387.08 | 5,348,140 | | 5,348,140 | - |
| 72 | Computer Software | 387.09 | 965,150 | | 965,150 | - |
| 73 | Communication Equipment | 387.10 | 1,233,478 | | 1,233,478 | - |
| 74 | Misc. Energy Storage Equipment | 387.11 | 7,837,251 | | 7,837,251 | - |
| 75 | Asset Retirement Costs for Energy Storage | 387.12 | - | | - | - |
| 76 | **Total Energy Storage Plant** | | **331,644,216** | Line 397, Col AP | **331,644,216** | **2,139,007** |
| 77 | | | | | | |
| 78 | Transmission Plant | | | | | |
| 79 | Land and land rights | 350 | 83,233,231 | | 83,233,231 | 2,498,332 |
| 80 | Land Right of Way | 350.1 | 53,981,918 | | 53,981,918 | 29,275 |
| 81 | Computer Hardware | 351.1 | 18,096,918 | | 18,096,918 | 3,080,732 |
| 82 | Computer Software | 351.2 | 10,027,103 | | 10,027,103 | 2,121,782 |
| 83 | Communication Equipment | 351.3 | 53,102,864 | | 53,102,864 | 6,006,422 |
| 84 | Structures and improvements | 352 | 271,315,610 | | 271,315,610 | 25,148,861 |
| 85 | Station equipment | 353 | 1,072,451,025 | | 1,072,451,025 | 145,201,130 |
| 86 | Computer Hardware | 353.1 | 12,237,145 | | 12,237,145 | 162,332 |
| 87 | Towers and fixtures | 354 | 64,133,961 | | 64,133,961 | 8,714,815 |
| 88 | Poles and fixtures | 355 | 569,963,977 | | 569,963,977 | 15,995,057 |
| 89 | Overhead conductors, devices | 356 | 239,352,195 | | 239,352,195 | 5,662,294 |
| 90 | Underground conduit | 357 | 733,196 | | 733,196 | 168,061 |
| 91 | Roads and trails | 359 | 9,799,150 | | 9,799,150 | - |
| 92 | **Total Transmission Plant** | | **2,458,428,292** | Line 467, Col AP | **2,458,428,292** | **214,789,092** |
| 93 | | | | | | |
| 94 | Distribution Plant | | | | | |

| | A | B | AA | AB | AC | AD |
|---|---|---|---|---|---|---|
| 1 | **Public Service Company of New Mexico** | | | | | |
| 2 | **Schedule B-2** | | | | | |
| 3 | **Original Cost of Plant In Service by Detail Account** | | | | | |
| 4 | **Base Period Ending 6/30/2026** | | | | | |
| 5 | **Test Period Ending 9/30/2028** | | | | | |
| 6 | **This schedule is sponsored by PNM Witness Gutierrez** | | | | | |
| 7 | **Utility Account** | **FERC** | **Linkage 2 Ending Balance Sept-27** | **Reference to PNM Exhibit RNG-4 WP Plant - B-3 - Base, Link, Test** | **Test Period Beginning Balance Oct-27** | **Additions** |
| 95 | Land and land rights | 360 | 10,684,266 | | 10,684,266 | 3,383,744 |
| 96 | Land Right of Way | 360.1 | 4,685,187 | | 4,685,187 | 635,467 |
| 97 | Structures and improvements | 361 | 77,223,010 | | 77,223,010 | 7,319,152 |
| 98 | Station equipment | 362 | 399,903,361 | | 399,903,361 | 41,302,078 |
| 99 | Computer Hardware | 363.1 | 19,714,314 | | 19,714,314 | 9,927,189 |
| 100 | Computer Software | 363.2 | 87,363,782 | | 87,363,782 | 30,500,920 |
| 101 | Communication Equipment | 363.3 | 34,725,676 | | 34,725,676 | 24,580,838 |
| 102 | Poles, towers and fixtures | 364 | 520,685,391 | | 520,685,391 | 54,208,729 |
| 103 | Overhead conductors, devices | 365 | 348,573,735 | | 348,573,735 | 40,624,664 |
| 104 | Underground conduit | 366 | 217,492,109 | | 217,492,109 | 21,726,090 |
| 105 | Undergrnd conductors, devices | 367 | 511,775,832 | | 511,775,832 | 43,912,487 |
| 106 | Line transformers | 368 | 303,843,711 | | 303,843,711 | 14,926,270 |
| 107 | Services | 369 | 109,274,375 | | 109,274,375 | 5,452,623 |
| 108 | Services - Underground | 369.1 | 199,910,672 | | 199,910,672 | 17,266,641 |
| 109 | Meters | 370 | 55,481,320 | | 55,481,320 | 5,811,713 |
| 110 | Meters - Grid Mod | 370.4 | 54,422,597 | | 54,422,597 | 36,904,293 |
| 111 | Installs customer premise | 371 | 9,151,530 | | 9,151,530 | - |
| 112 | Leased Flood Lighting | 371.1 | 307,353 | | 307,353 | - |
| 113 | Street lighting,signal system | 373 | 36,157,178 | | 36,157,178 | 6,898,546 |
| 114 | Asset Retirement Costs-Distr | 374 | - | | - | - |
| 115 | **Total Distribution Plant** | | **3,001,375,397** | Line 686, Col AP | **3,001,375,397** | **365,381,445** |
| 116 | | | | | | |
| 117 | General Plant | | | | | |
| 118 | Miscellaneous Intangible Plant | 303 | - | | - | - |
| 119 | Land and land rights | 389 | 1,937,568 | | 1,937,568 | - |
| 120 | Structures and improvements | 390 | 77,633,789 | | 77,633,789 | 9,284,668 |
| 121 | Structures and improvements-BPS Remodeling | 390.1 | 5,874,964 | | 5,874,964 | 11,405 |
| 122 | Structures and improvements-BPS Office Building | 390.2 | 5,945,142 | | 5,945,142 | - |
| 123 | Office furniture, equipment | 391 | 5,061,286 | | 5,061,286 | 39,305 |

| | A | B | AA | AB | AC | AD |
|---|---|---|---|---|---|---|
| 1 | **Public Service Company of New Mexico** | | | | | |
| 2 | **Schedule B-2** | | | | | |
| 3 | **Original Cost of Plant In Service by Detail Account** | | | | | |
| 4 | **Base Period Ending 6/30/2026** | | | | | |
| 5 | **Test Period Ending 9/30/2028** | | | | | |
| 6 | **This schedule is sponsored by PNM Witness Gutierrez** | | | | | |
| 7 | **Utility Account** | **FERC** | **Linkage 2 Ending Balance Sept-27** | **Reference to PNM Exhibit RNG-4 WP Plant - B-3 - Base, Link, Test** | **Test Period Beginning Balance Oct-27** | **Additions** |
| 124 | Office Furniture and Equipment - PC System | 391.1 | - | | - | - |
| 125 | Office Furniture and Equipment - PC's | 391.2 | - | | - | - |
| 126 | Computer Hardware | 391.3 | - | | - | - |
| 127 | Computer Hardware - Solar | 391.5 | - | | - | - |
| 128 | Computer Hardware | 391.7 | - | | - | - |
| 129 | Transportation equipment | 392 | 4,794,947 | | 4,794,947 | 509,179 |
| 130 | Transportation equipment-Heavy | 392.1 | 4,808,311 | | 4,808,311 | 178,395 |
| 131 | Transportation equipment-Trailer | 392.2 | 8,573,552 | | 8,573,552 | 95,210 |
| 132 | Transportation Equipment - Leaseback | 392.4 | - | | - | - |
| 133 | Stores equipment | 393 | 97,939 | | 97,939 | - |
| 134 | Tools, shop, garage equipment | 394 | 20,751,033 | | 20,751,033 | 671,042 |
| 135 | Laboratory equipment | 395 | 206,265 | | 206,265 | - |
| 136 | Power operated equipment | 396 | 7,490,064 | | 7,490,064 | 88,638 |
| 137 | Computer Hardware | 397.1 | 860,695 | | 860,695 | 5,703 |
| 138 | Computer Software | 397.2 | 34,139,229 | | 34,139,229 | 17,219,240 |
| 139 | Communication Equipment | 397.3 | - | | - | - |
| 140 | Miscellaneous equipment | 398 | 1,823,135 | | 1,823,135 | 616,164 |
| 141 | ARO General Plant | 399.1 | 19,473 | | 19,473 | - |
| 142 | **Total General Plant** | | **180,017,392** | Lines 744, Col AP | **180,017,392** | **28,718,949** |
| 143 | | | | | | |
| 144 | **Total Electric Plant In Service** | 101/106 | **8,289,414,014** | Line 746, Col AP | **8,289,414,014** | **675,736,898** |
| 145 | | | | | | |
| 146 | **Electric Plant Purchased** | **102** | **-** | | **-** | |
| 147 | | | | | | |
| 148 | Acq Adj - Palo Verde Unit 1&2 (Drexel) | 114 | - | | - | **-** |
| 149 | Acq Adj - Palo Verde Unit 2 (First Chicago) | 114 | 15,323,654 | | 15,323,654 | **-** |
| 150 | Acq Adj - (EIP) | 114 | - | | - | - |
| 151 | **Electric Plant Acq Adj** | 114 | **15,323,654** | Line 753, Col Ap | **15,323,654** | **-** |
| 152 | | | | | | |

| | A | B | AA | AB | AC | AD |
|---|---|---|---|---|---|---|
| 1 | **Public Service Company of New Mexico** | | | | | |
| 2 | **Schedule B-2** | | | | | |
| 3 | **Original Cost of Plant In Service by Detail Account** | | | | | |
| 4 | **Base Period Ending 6/30/2026** | | | | | |
| 5 | **Test Period Ending 9/30/2028** | | | | | |
| 6 | **This schedule is sponsored by PNM Witness Gutierrez** | | | | | |
| 7 | **Utility Account** | **FERC** | **Linkage 2 Ending Balance Sept-27** | **Reference to PNM Exhibit RNG-4 WP Plant - B-3 - Base, Link, Test** | **Test Period Beginning Balance Oct-27** | **Additions** |
| 153 | **Total Plant** | | **8,304,737,668** | Line 755, Col AP | **8,304,737,668** | **675,736,898** |
| 154 | | | | | | |
| 155 | Corporate Plant - Unallocated | | | | | |
| 156 | Miscellaneous Intangible Plant | 303 | - | | - | - |
| 157 | Land and Land Rights | 389 | 5,133,327 | | 5,133,327 | - |
| 158 | Structures and Improvements | 390 | 82,446,782 | | 82,446,782 | 6,203,391 |
| 159 | Bulk Power Office Building Remodeling | 390.1 | - | | - | - |
| 160 | Bulk Power Office Building | 390.2 | - | | - | - |
| 161 | Office Furniture and Equipment | 391 | 1,566,333 | | 1,566,333 | 860,405 |
| 162 | Office Furniture and Equipment - PC System | 391.1 | - | | - | - |
| 163 | Office Furniture and Equipment - PC's | 391.2 | - | | - | - |
| 164 | Computer Hardware | 391.3 | - | | - | - |
| 165 | Computer Hardware - Solar | 391.5 | - | | - | - |
| 166 | Computer Hardware | 391.7 | - | | - | - |
| 167 | Transportation Equipment - Light | 392 | 350,330 | | 350,330 | - |
| 168 | Transportation Equipment - Heavy | 392.1 | 52,320 | | 52,320 | - |
| 169 | Transportation Equipment - Trailers | 392.2 | 10,272 | | 10,272 | - |
| 170 | Transportation Equipment - Leaseback | 392.4 | (180) | | (180) | - |
| 171 | Stores Equipment | 393 | - | | - | - |
| 172 | Tools, Shop & Garage Equipment | 394 | 412,720 | | 412,720 | 24,010 |
| 173 | Laboratory Equipment | 395 | - | | - | - |
| 174 | Power Operated Equipment | 396 | 26,134 | | 26,134 | - |
| 175 | Communication Equipment | 397 | - | | - | - |
| 176 | Computer Hardware | 397.1 | 31,385,988 | | 31,385,988 | 7,164,629 |
| 177 | Computer Software | 397.2 | 255,845,568 | | 255,845,568 | 60,421,177 |
| 178 | Communication Equipment | 397.3 | 3,768,504 | | 3,768,504 | - |
| 179 | Communication Equipment | 397.2 | - | | - | - |
| 180 | Communication Equipment | 397.3 | - | | - | - |
| 181 | Miscellaneous Equipment | 398 | - | | - | - |

| | A | B | AA | AB | AC | AD |
|---|---|---|---|---|---|---|
| 1 | **Public Service Company of New Mexico** | | | | | |
| 2 | **Schedule B-2** | | | | | |
| 3 | **Original Cost of Plant In Service by Detail Account** | | | | | |
| 4 | **Base Period Ending 6/30/2026** | | | | | |
| 5 | **Test Period Ending 9/30/2028** | | | | | |
| 6 | **This schedule is sponsored by PNM Witness Gutierrez** | | | | | |
| 7 | **Utility Account** | **FERC** | **Linkage 2 Ending Balance Sept-27** | **Reference to PNM Exhibit RNG-4 WP Plant - B-3 - Base, Link, Test** | **Test Period Beginning Balance Oct-27** | **Additions** |
| 182 | ARO General Plant-1 | 399 | - | | - | - |
| 183 | **Total Corporate** | | **380,998,099** | Line 786, Col AP | **380,998,099** | **74,673,611** |
| 184 | | | | | | |
| 185 | **Total Electric Plant In Service-Corporate** | 101/106 | **380,998,099** | | **380,998,099** | **74,673,611** |
| 186 | | | | | | |
| 187 | **Electric Plant Purchased-Corporate** | 102 | **-** | | **-** | |
| 188 | | | | | | |
| 189 | **Electric Plant Acq Adj-Corporate** | 114 | **-** | | - | |
| 190 | | | | | | |
| 191 | **Total Corporate** | | **380,998,099** | | **380,998,099** | **74,673,611** |
| 192 | | | | | | |
| 193 | **Total Electric Plant In Service w/Corporate** | **101/106** | **8,670,412,112** | Line 788, Col AP | **8,670,412,112** | **750,410,509** |
| 194 | | | | | | |
| 195 | **Electric Plant Purchased w/Corporate** | **102** | **-** | | **-** | **-** |
| 196 | | | | | | |
| 197 | **Electric Plant Acq Adj w/Corporate** | **114** | **15,323,654** | Line 792, Col AP | **15,323,654** | **-** |
| 198 | | | | | | |
| 199 | **Total Plant In Service w/Corporate** | | **8,685,735,766** | Line 794, Col AP | **8,685,735,766** | **750,410,509** |

| | A | B | AE | AF | AG | AH |
|---|---|---|---|---|---|---|
| 1 | **Public Service Company of New Mexico** | | | | | |
| 2 | **Schedule B-2** | | | | | |
| 3 | **Original Cost of Plant In Service by Detail Account** | | | | | |
| 4 | **Base Period Ending 6/30/2026** | | | | | |
| 5 | **Test Period Ending 9/30/2028** | | | | | |
| 6 | **This schedule is sponsored by PNM Witness Gutierrez** | | | | | |
| 7 | **Utility Account** | **FERC** | **Retirements** | **Adjustments** | **Transfers** | **Other DR/CR** |
| 8 | Steam Production Plant | | | | | |
| 9 | Land and Land Rights | 310 | - | | | |
| 10 | Land Right of Way | 310.1 | - | | | |
| 11 | Structures & Improvements | 311 | (400,332) | | | |
| 12 | Boiler Plant Equipment | 312 | (3,863,712) | | | |
| 13 | Turbogenerator Units | 314 | (412,332) | | | |
| 14 | Accessory Electric Equipment | 315 | (168,840) | | | |
| 15 | Computer Hardware | 315.01 | - | | | |
| 16 | Computer Software | 315.02 | - | | | |
| 17 | Communication Equipment | 315.03 | - | | | |
| 18 | Misc Power Plant Equipment | 316 | (512,784) | | | |
| 19 | Asset Retirement Costs - Steam | 317 | | | | |
| 20 | **Total Steam Production Plant** | | **(5,358,000)** | **-** | **-** | **-** |
| 21 | | | | | | |
| 22 | Nuclear Production Plant | | | | | |
| 23 | Land and land rights | 320 | - | - | - | - |
| 24 | Land Right of Way | 320.1 | - | - | - | - |
| 25 | Structures and improvements | 321 | (207,180) | - | - | - |
| 26 | Reactor plant equipment | 322 | (834,468) | - | - | - |
| 27 | Turbogenerator units | 323 | (499,836) | - | - | - |
| 28 | Accessory electric equipment | 324 | (116,592) | - | - | - |
| 29 | Computer Hardware | 324.01 | - | - | - | - |
| 30 | Computer Software | 324.02 | - | - | - | - |
| 31 | Communication Equipment | 324.03 | - | - | - | - |
| 32 | Misc power plant equipment | 325 | (19,308) | - | - | - |
| 33 | Asset Retirement Costs-Nuclear | 326 | - | - | - | - |
| 34 | **Total Nuclear Production** | | **(1,677,384)** | **-** | **-** | **-** |
| 35 | | | | | | |
| 36 | Solar Production Plant | | | | | |

| | A | B | AE | AF | AG | AH |
|---|---|---|---|---|---|---|
| 1 | **Public Service Company of New Mexico** | | | | | |
| 2 | **Schedule B-2** | | | | | |
| 3 | **Original Cost of Plant In Service by Detail Account** | | | | | |
| 4 | **Base Period Ending 6/30/2026** | | | | | |
| 5 | **Test Period Ending 9/30/2028** | | | | | |
| 6 | **This schedule is sponsored by PNM Witness Gutierrez** | | | | | |
| 7 | **Utility Account** | **FERC** | **Retirements** | **Adjustments** | **Transfers** | **Other DR/CR** |
| 37 | Land & Land Rights | 338.01 | - | - | - | - |
| 38 | Structures and Improvements | 338.02 | - | - | - | - |
| 39 | Solar Panels | 338.04 | - | - | - | - |
| 40 | Collector System | 338.05 | - | - | - | - |
| 41 | Solar Inverters | 338.07 | | | | |
| 42 | Other Accessory Electrical Equipment | 338.08 | - | - | - | - |
| 43 | Computer Hardware | 338.09 | - | - | - | - |
| 44 | Computer Software | 338.10 | - | - | - | - |
| 45 | Communication Equipment | 338.11 | - | - | - | - |
| 46 | Misc. Power Plant Equipment | 338.12 | - | - | - | - |
| 47 | **Total Solar Production** | | **-** | **-** | **-** | **-** |
| 48 | | | | | | |
| 49 | Other Production Plant | | | | | |
| 50 | Land and land rights | 340 | - | - | - | - |
| 51 | Land Right of Way | 340.1 | - | - | - | - |
| 52 | Structures and improvements | 341 | (453,948) | - | - | - |
| 53 | Fuel holders,producrs,accessr | 342 | (95,004) | - | - | - |
| 54 | Prime movers | 343 | - | - | - | - |
| 55 | Generators | 344 | (923,460) | - | - | - |
| 56 | Accessory electric equipment | 345 | (407,052) | - | - | - |
| 57 | Computer hardware | 345.1 | - | - | - | - |
| 58 | Computer software | 345.2 | - | - | - | - |
| 59 | Communication equipment | 345.3 | - | - | - | - |
| 60 | Misc power plant equipment | 346 | (207,504) | - | - | - |
| 61 | ARO Other Production | 347 | - | - | - | - |
| 62 | **Total Other Production** | | **(2,086,968)** | **-** | **-** | **-** |
| 63 | | | | | | |
| 64 | Energy Storage Plant | | | | | |
| 65 | Land & Land Rights | 387.01 | - | - | - | - |

| | A | B | AE | AF | AG | AH |
|---|---|---|---|---|---|---|
| 1 | **Public Service Company of New Mexico** | | | | | |
| 2 | **Schedule B-2** | | | | | |
| 3 | **Original Cost of Plant In Service by Detail Account** | | | | | |
| 4 | **Base Period Ending 6/30/2026** | | | | | |
| 5 | **Test Period Ending 9/30/2028** | | | | | |
| 6 | **This schedule is sponsored by PNM Witness Gutierrez** | | | | | |
| 7 | **Utility Account** | **FERC** | **Retirements** | **Adjustments** | **Transfers** | **Other DR/CR** |
| 66 | Structures & Improvements | 387.02 | - | - | - | - |
| 67 | Energy Storage Equipment | 387.03 | - | - | - | - |
| 68 | Collector System | 387.05 | - | - | - | - |
| 69 | Generator Step-Up Transformers (GSU) | 387.06 | - | - | - | - |
| 70 | Inverters | 387.07 | - | - | - | - |
| 71 | Computer Hardware | 387.08 | - | - | - | - |
| 72 | Computer Software | 387.09 | - | - | - | - |
| 73 | Communication Equipment | 387.10 | - | - | - | - |
| 74 | Misc. Energy Storage Equipment | 387.11 | - | - | - | - |
| 75 | Asset Retirement Costs for Energy Storage | 387.12 | - | - | - | - |
| 76 | **Total Energy Storage Plant** | | **-** | **-** | **-** | **-** |
| 77 | | | | | | |
| 78 | Transmission Plant | | | | | |
| 79 | Land and land rights | 350 | - | - | - | - |
| 80 | Land Right of Way | 350.1 | - | - | - | - |
| 81 | Computer Hardware | 351.1 | (123,843) | - | - | - |
| 82 | Computer Software | 351.2 | - | - | - | - |
| 83 | Communication Equipment | 351.3 | (1,372,326) | - | - | - |
| 84 | Structures and improvements | 352 | (202,848) | - | - | - |
| 85 | Station equipment | 353 | (2,959,416) | - | - | - |
| 86 | Computer Hardware | 353.1 | (46,320) | - | - | - |
| 87 | Towers and fixtures | 354 | (297,540) | - | - | - |
| 88 | Poles and fixtures | 355 | (1,398,804) | - | - | - |
| 89 | Overhead conductors, devices | 356 | (200,748) | - | - | - |
| 90 | Underground conduit | 357 | - | - | - | - |
| 91 | Roads and trails | 359 | (1,152) | - | - | - |
| 92 | **Total Transmission Plant** | | **(6,602,997)** | **-** | **-** | **-** |
| 93 | | | | | | |
| 94 | Distribution Plant | | | | | |

| | A | B | AE | AF | AG | AH |
|---|---|---|---|---|---|---|
| 1 | **Public Service Company of New Mexico** | | | | | |
| 2 | **Schedule B-2** | | | | | |
| 3 | **Original Cost of Plant In Service by Detail Account** | | | | | |
| 4 | **Base Period Ending 6/30/2026** | | | | | |
| 5 | **Test Period Ending 9/30/2028** | | | | | |
| 6 | **This schedule is sponsored by PNM Witness Gutierrez** | | | | | |
| 7 | **Utility Account** | **FERC** | **Retirements** | **Adjustments** | **Transfers** | **Other DR/CR** |
| 95 | Land and land rights | 360 | - | - | - | - |
| 96 | Land Right of Way | 360.1 | - | - | - | - |
| 97 | Structures and improvements | 361 | (112,980) | - | - | - |
| 98 | Station equipment | 362 | (1,079,424) | - | - | - |
| 99 | Computer Hardware | 363.1 | (1,392,452) | - | - | - |
| 100 | Computer Software | 363.2 | - | - | - | - |
| 101 | Communication Equipment | 363.3 | (1,467,991) | - | - | - |
| 102 | Poles, towers and fixtures | 364 | (3,668,676) | - | - | - |
| 103 | Overhead conductors, devices | 365 | (1,808,196) | - | - | - |
| 104 | Underground conduit | 366 | (562,464) | - | - | - |
| 105 | Undergrnd conductors, devices | 367 | (2,115,648) | - | - | - |
| 106 | Line transformers | 368 | (1,284,948) | - | - | - |
| 107 | Services | 369 | (373,800) | - | - | - |
| 108 | Services - Underground | 369.1 | (198,228) | - | - | - |
| 109 | Meters | 370 | (28,730,313) | - | - | - |
| 110 | Meters - Grid Mod | 370.4 | - | - | - | - |
| 111 | Installs customer premise | 371 | - | - | - | - |
| 112 | Leased Flood Lighting | 371.1 | - | - | - | - |
| 113 | Street lighting,signal system | 373 | (260,688) | - | - | - |
| 114 | Asset Retirement Costs-Distr | 374 | - | - | - | - |
| 115 | **Total Distribution Plant** | | **(43,055,808)** | **-** | **-** | **-** |
| 116 | | | | | | |
| 117 | General Plant | | | | | |
| 118 | Miscellaneous Intangible Plant | 303 | - | - | - | - |
| 119 | Land and land rights | 389 | - | - | - | - |
| 120 | Structures and improvements | 390 | (384,996) | - | - | - |
| 121 | Structures and improvements-BPS Remodeling | 390.1 | (25,932) | - | - | - |
| 122 | Structures and improvements-BPS Office Building | 390.2 | - | - | - | - |
| 123 | Office furniture, equipment | 391 | (8,151) | - | - | - |

| | A | B | AE | AF | AG | AH |
|---|---|---|---|---|---|---|
| 1 | **Public Service Company of New Mexico** | | | | | |
| 2 | **Schedule B-2** | | | | | |
| 3 | **Original Cost of Plant In Service by Detail Account** | | | | | |
| 4 | **Base Period Ending 6/30/2026** | | | | | |
| 5 | **Test Period Ending 9/30/2028** | | | | | |
| 6 | **This schedule is sponsored by PNM Witness Gutierrez** | | | | | |
| 7 | **Utility Account** | **FERC** | **Retirements** | **Adjustments** | **Transfers** | **Other DR/CR** |
| 124 | Office Furniture and Equipment - PC System | 391.1 | - | - | - | - |
| 125 | Office Furniture and Equipment - PC's | 391.2 | - | - | - | - |
| 126 | Computer Hardware | 391.3 | - | - | - | - |
| 127 | Computer Hardware - Solar | 391.5 | - | - | - | - |
| 128 | Computer Hardware | 391.7 | - | - | - | - |
| 129 | Transportation equipment | 392 | (33,828) | - | - | - |
| 130 | Transportation equipment-Heavy | 392.1 | (258,996) | - | - | - |
| 131 | Transportation equipment-Trailer | 392.2 | (3,288) | - | - | - |
| 132 | Transportation Equipment - Leaseback | 392.4 | - | - | - | - |
| 133 | Stores equipment | 393 | (4,131) | - | - | - |
| 134 | Tools, shop, garage equipment | 394 | (490,244) | - | - | - |
| 135 | Laboratory equipment | 395 | - | - | - | - |
| 136 | Power operated equipment | 396 | (3,240) | - | - | - |
| 137 | Computer Hardware | 397.1 | - | - | - | - |
| 138 | Computer Software | 397.2 | - | - | - | - |
| 139 | Communication Equipment | 397.3 | - | - | - | - |
| 140 | Miscellaneous equipment | 398 | (7,819) | - | - | - |
| 141 | ARO General Plant | 399.1 | - | - | - | - |
| 142 | **Total General Plant** | | **(1,220,626)** | **-** | **-** | **-** |
| 143 | | | | | | |
| 144 | **Total Electric Plant In Service** | 101/106 | **(60,001,783)** | **-** | **-** | **-** |
| 145 | | | | | | |
| 146 | **Electric Plant Purchased** | **102** | | | | |
| 147 | | | | | | |
| 148 | Acq Adj - Palo Verde Unit 1&2 (Drexel) | 114 | **-** | **-** | **-** | - |
| 149 | Acq Adj - Palo Verde Unit 2 (First Chicago) | 114 | **-** | **-** | **-** | (832,053) |
| 150 | Acq Adj - (EIP) | 114 | - | - | - | - |
| 151 | **Electric Plant Acq Adj** | 114 | **-** | **-** | **-** | **(832,053)** |
| 152 | | | | | | |

| | A | B | AE | AF | AG | AH |
|---|---|---|---|---|---|---|
| 1 | **Public Service Company of New Mexico** | | | | | |
| 2 | **Schedule B-2** | | | | | |
| 3 | **Original Cost of Plant In Service by Detail Account** | | | | | |
| 4 | **Base Period Ending 6/30/2026** | | | | | |
| 5 | **Test Period Ending 9/30/2028** | | | | | |
| 6 | **This schedule is sponsored by PNM Witness Gutierrez** | | | | | |
| 7 | **Utility Account** | **FERC** | **Retirements** | **Adjustments** | **Transfers** | **Other DR/CR** |
| 153 | **Total Plant** | | **(60,001,783)** | **-** | **-** | **(832,053)** |
| 154 | | | | | | |
| 155 | Corporate Plant - Unallocated | | | | | |
| 156 | Miscellaneous Intangible Plant | 303 | - | - | - | - |
| 157 | Land and Land Rights | 389 | - | - | - | - |
| 158 | Structures and Improvements | 390 | (544,032) | - | - | - |
| 159 | Bulk Power Office Building Remodeling | 390.1 | - | - | - | - |
| 160 | Bulk Power Office Building | 390.2 | - | - | - | - |
| 161 | Office Furniture and Equipment | 391 | (6,584) | - | - | - |
| 162 | Office Furniture and Equipment - PC System | 391.1 | - | - | - | - |
| 163 | Office Furniture and Equipment - PC's | 391.2 | - | - | - | - |
| 164 | Computer Hardware | 391.3 | - | - | - | - |
| 165 | Computer Hardware - Solar | 391.5 | - | - | - | - |
| 166 | Computer Hardware | 391.7 | - | - | - | - |
| 167 | Transportation Equipment - Light | 392 | - | - | - | - |
| 168 | Transportation Equipment - Heavy | 392.1 | - | - | - | - |
| 169 | Transportation Equipment - Trailers | 392.2 | - | - | - | - |
| 170 | Transportation Equipment - Leaseback | 392.4 | (144) | - | - | - |
| 171 | Stores Equipment | 393 | - | - | - | - |
| 172 | Tools, Shop & Garage Equipment | 394 | - | - | - | - |
| 173 | Laboratory Equipment | 395 | - | - | - | - |
| 174 | Power Operated Equipment | 396 | - | - | - | - |
| 175 | Communication Equipment | 397 | - | - | - | - |
| 176 | Computer Hardware | 397.1 | (4,495,662) | - | - | - |
| 177 | Computer Software | 397.2 | - | - | - | - |
| 178 | Communication Equipment | 397.3 | (1,809,583) | - | - | - |
| 179 | Communication Equipment | 397.2 | - | - | - | - |
| 180 | Communication Equipment | 397.3 | - | - | - | - |
| 181 | Miscellaneous Equipment | 398 | - | - | - | - |

| | A | B | AE | AF | AG | AH |
|---|---|---|---|---|---|---|
| 1 | **Public Service Company of New Mexico** | | | | | |
| 2 | **Schedule B-2** | | | | | |
| 3 | **Original Cost of Plant In Service by Detail Account** | | | | | |
| 4 | **Base Period Ending 6/30/2026** | | | | | |
| 5 | **Test Period Ending 9/30/2028** | | | | | |
| 6 | **This schedule is sponsored by PNM Witness Gutierrez** | | | | | |
| 7 | **Utility Account** | **FERC** | **Retirements** | **Adjustments** | **Transfers** | **Other DR/CR** |
| 182 | ARO General Plant-1 | 399 | - | - | - | - |
| 183 | **Total Corporate** | | **(6,856,005)** | **-** | **-** | **-** |
| 184 | | | | | | |
| 185 | **Total Electric Plant In Service-Corporate** | 101/106 | **(6,856,005)** | **-** | **-** | **-** |
| 186 | | | | | | |
| 187 | **Electric Plant Purchased-Corporate** | 102 | | | | |
| 188 | | | | | | |
| 189 | **Electric Plant Acq Adj-Corporate** | 114 | | | | |
| 190 | | | | | | |
| 191 | **Total Corporate** | | **(6,856,005)** | **-** | **-** | **-** |
| 192 | | | | | | |
| 193 | **Total Electric Plant In Service w/Corporate** | **101/106** | **(66,857,788)** | **-** | **-** | **-** |
| 194 | | | | | | |
| 195 | **Electric Plant Purchased w/Corporate** | **102** | **-** | **-** | **-** | **-** |
| 196 | | | | | | |
| 197 | **Electric Plant Acq Adj w/Corporate** | **114** | **-** | **-** | **-** | **(832,053)** |
| 198 | | | | | | |
| 199 | **Total Plant In Service w/Corporate** | | **(66,857,788)** | **-** | **-** | **(832,053)** |

| | A | B | AI | AJ | AK | AL |
|---|---|---|---|---|---|---|
| 1 | **Public Service Company of New Mexico** | | | | | |
| 2 | **Schedule B-2** | | | | | |
| 3 | **Original Cost of Plant In Service by Detail Account** | | | | | |
| 4 | **Base Period Ending 6/30/2026** | | | | | |
| 5 | **Test Period Ending 9/30/2028** | | | | | |
| 6 | **This schedule is sponsored by PNM Witness Gutierrez** | | | | | |
| 7 | **Utility Account** | **FERC** | **Test Period Ending Balance Sept-28** | **Total Test Period Adjustments RNG-4, B-3** | **Adjusted Test Period Ending Balance Sep-28** | **Reference to PNM Exhibit RNG-4 WP Plant - B-3 - Base, Link, Test** |
| 8 | Steam Production Plant | | | | | |
| 9 | Land and Land Rights | 310 | 618,487 | - | 618,487 | |
| 10 | Land Right of Way | 310.1 | 22,368 | - | 22,368 | |
| 11 | Structures & Improvements | 311 | 38,710,001 | (3,230,922) | 35,479,079 | |
| 12 | Boiler Plant Equipment | 312 | 262,627,738 | (875,289) | 261,752,449 | |
| 13 | Turbogenerator Units | 314 | 71,679,497 | (1,534,469) | 70,145,027 | |
| 14 | Accessory Electric Equipment | 315 | 20,425,098 | (36,315) | 20,388,784 | |
| 15 | Computer Hardware | 315.01 | - | - | - | |
| 16 | Computer Software | 315.02 | 1,362,246 | - | 1,362,246 | |
| 17 | Communication Equipment | 315.03 | 334,053 | - | 334,053 | |
| 18 | Misc Power Plant Equipment | 316 | 28,569,602 | (226,546) | 28,343,056 | |
| 19 | Asset Retirement Costs - Steam | 317 | 10,249,476 | - | 10,249,476 | |
| 20 | **Total Steam Production Plant** | | **434,598,566** | **(5,903,541)** | **428,695,025** | Line 68, Col BH |
| 21 | | | | | | |
| 22 | Nuclear Production Plant | | | | | |
| 23 | Land and land rights | 320 | 439,822 | - | 439,822 | |
| 24 | Land Right of Way | 320.1 | 44,622 | - | 44,622 | |
| 25 | Structures and improvements | 321 | 212,085,752 | (1,241,744) | 210,844,008 | |
| 26 | Reactor plant equipment | 322 | 362,734,555 | (5,636,769) | 357,097,785 | |
| 27 | Turbogenerator units | 323 | 113,855,141 | 249,918 | 114,105,059 | |
| 28 | Accessory electric equipment | 324 | 60,659,017 | 58,296 | 60,717,313 | |
| 29 | Computer Hardware | 324.01 | - | - | - | |
| 30 | Computer Software | 324.02 | 15,820,234 | (576,572) | 15,243,663 | |
| 31 | Communication Equipment | 324.03 | 862,442 | (96,095) | 766,347 | |
| 32 | Misc power plant equipment | 325 | 78,313,087 | (1,527,859) | 76,785,228 | |
| 33 | Asset Retirement Costs-Nuclear | 326 | - | - | - | |
| 34 | **Total Nuclear Production** | | **844,814,673** | **(8,770,825)** | **836,043,847** | Line 141, Col BH |
| 35 | | | | | | |
| 36 | Solar Production Plant | | | | | |

| | A | B | AI | AJ | AK | AL |
|---|---|---|---|---|---|---|
| 1 | **Public Service Company of New Mexico** | | | | | |
| 2 | **Schedule B-2** | | | | | |
| 3 | **Original Cost of Plant In Service by Detail Account** | | | | | |
| 4 | **Base Period Ending 6/30/2026** | | | | | |
| 5 | **Test Period Ending 9/30/2028** | | | | | |
| 6 | **This schedule is sponsored by PNM Witness Gutierrez** | | | | | |
| 7 | **Utility Account** | **FERC** | **Test Period Ending Balance Sept-28** | **Total Test Period Adjustments RNG-4, B-3** | **Adjusted Test Period Ending Balance Sep-28** | **Reference to PNM Exhibit RNG-4 WP Plant - B-3 - Base, Link, Test** |
| 37 | Land & Land Rights | 338.01 | 11,040,948 | - | 11,040,948 | |
| 38 | Structures and Improvements | 338.02 | 268,299 | - | 268,299 | |
| 39 | Solar Panels | 338.04 | 440,961,518 | (877,541) | 440,083,977 | |
| 40 | Collector System | 338.05 | 8,264,812 | - | 8,264,812 | |
| 41 | Solar Inverters | 338.07 | 10,127,593 | - | 10,127,593 | |
| 42 | Other Accessory Electrical Equipment | 338.08 | 23,775,507 | - | 23,775,507 | |
| 43 | Computer Hardware | 338.09 | 51,760 | - | 51,760 | |
| 44 | Computer Software | 338.10 | - | - | - | |
| 45 | Communication Equipment | 338.11 | 637,577 | - | 637,577 | |
| 46 | Misc. Power Plant Equipment | 338.12 | 5,228,178 | - | 5,228,178 | |
| 47 | **Total Solar Production** | | **500,356,192** | **(877,541)** | **499,478,651** | Line 248, Col BH |
| 48 | | | | | | |
| 49 | Other Production Plant | | | | | |
| 50 | Land and land rights | 340 | 7,079,884 | - | 7,079,884 | |
| 51 | Land Right of Way | 340.1 | 1,959,313 | - | 1,959,313 | |
| 52 | Structures and improvements | 341 | 95,270,033 | 23,113 | 95,293,145 | |
| 53 | Fuel holders,producrs,accessr | 342 | 130,825,335 | (273,072) | 130,552,263 | |
| 54 | Prime movers | 343 | - | - | - | |
| 55 | Generators | 344 | 272,503,509 | (3,526,120) | 268,977,390 | |
| 56 | Accessory electric equipment | 345 | 27,933,720 | (71,500) | 27,862,221 | |
| 57 | Computer hardware | 345.1 | - | - | - | |
| 58 | Computer software | 345.2 | 60,931 | - | 60,931 | |
| 59 | Communication equipment | 345.3 | 38,862 | - | 38,862 | |
| 60 | Misc power plant equipment | 346 | 51,085,179 | (526,238) | 50,558,941 | |
| 61 | ARO Other Production | 347 | 7,008,573 | - | 7,008,573 | |
| 62 | **Total Other Production** | | **593,765,340** | **(4,373,817)** | **589,391,523** | Line 351, Col BH |
| 63 | | | | | | |
| 64 | Energy Storage Plant | | | | | |
| 65 | Land & Land Rights | 387.01 | - | - | - | |

| | A | B | AI | AJ | AK | AL |
|---|---|---|---|---|---|---|
| 1 | **Public Service Company of New Mexico** | | | | | |
| 2 | **Schedule B-2** | | | | | |
| 3 | **Original Cost of Plant In Service by Detail Account** | | | | | |
| 4 | **Base Period Ending 6/30/2026** | | | | | |
| 5 | **Test Period Ending 9/30/2028** | | | | | |
| 6 | **This schedule is sponsored by PNM Witness Gutierrez** | | | | | |
| 7 | **Utility Account** | **FERC** | **Test Period Ending Balance Sept-28** | **Total Test Period Adjustments RNG-4, B-3** | **Adjusted Test Period Ending Balance Sep-28** | **Reference to PNM Exhibit RNG-4 WP Plant - B-3 - Base, Link, Test** |
| 66 | Structures & Improvements | 387.02 | 23,176,806 | - | 23,176,806 | |
| 67 | Energy Storage Equipment | 387.03 | 210,447,129 | (493,616.96) | 209,953,512 | |
| 68 | Collector System | 387.05 | 25,624,069 | - | 25,624,069 | |
| 69 | Generator Step-Up Transformers (GSU) | 387.06 | 59,151,201 | - | 59,151,201 | |
| 70 | Inverters | 387.07 | - | - | - | |
| 71 | Computer Hardware | 387.08 | 5,348,140 | - | 5,348,140 | |
| 72 | Computer Software | 387.09 | 965,150 | - | 965,150 | |
| 73 | Communication Equipment | 387.10 | 1,233,478 | - | 1,233,478 | |
| 74 | Misc. Energy Storage Equipment | 387.11 | 7,837,251 | - | 7,837,251 | |
| 75 | Asset Retirement Costs for Energy Storage | 387.12 | - | - | - | |
| 76 | **Total Energy Storage Plant** | | **333,783,222** | **(493,617)** | **333,289,606** | Line 397, Col BK |
| 77 | | | | | | |
| 78 | Transmission Plant | | | | | |
| 79 | Land and land rights | 350 | 85,731,563 | (1,476,890) | 84,254,673 | |
| 80 | Land Right of Way | 350.1 | 54,011,193 | (6,756) | 54,004,437 | |
| 81 | Computer Hardware | 351.1 | 21,053,807 | (1,957,985) | 19,095,822 | |
| 82 | Computer Software | 351.2 | 12,148,885 | (1,470,360) | 10,678,524 | |
| 83 | Communication Equipment | 351.3 | 57,736,959 | (2,933,604) | 54,803,355 | |
| 84 | Structures and improvements | 352 | 296,261,623 | (15,962,646) | 280,298,977 | |
| 85 | Station equipment | 353 | 1,214,692,739 | (89,968,372) | 1,124,724,368 | |
| 86 | Computer Hardware | 353.1 | 12,353,157 | (57,330) | 12,295,827 | |
| 87 | Towers and fixtures | 354 | 72,551,235 | (5,715,072) | 66,836,163 | |
| 88 | Poles and fixtures | 355 | 584,560,230 | (8,901,234) | 575,658,995 | |
| 89 | Overhead conductors, devices | 356 | 244,813,740 | (2,516,611) | 242,297,129 | |
| 90 | Underground conduit | 357 | 901,258 | (90,495) | 810,763 | |
| 91 | Roads and trails | 359 | 9,797,998 | 576 | 9,798,574 | |
| 92 | **Total Transmission Plant** | | **2,666,614,387** | **(131,056,779)** | **2,535,557,608** | Line 467, Col BH |
| 93 | | | | | | |
| 94 | Distribution Plant | | | | | |

| | A | B | AI | AJ | AK | AL |
|---|---|---|---|---|---|---|
| 1 | **Public Service Company of New Mexico** | | | | | |
| 2 | **Schedule B-2** | | | | | |
| 3 | **Original Cost of Plant In Service by Detail Account** | | | | | |
| 4 | **Base Period Ending 6/30/2026** | | | | | |
| 5 | **Test Period Ending 9/30/2028** | | | | | |
| 6 | **This schedule is sponsored by PNM Witness Gutierrez** | | | | | |
| 7 | **Utility Account** | **FERC** | **Test Period Ending Balance Sept-28** | **Total Test Period Adjustments RNG-4, B-3** | **Adjusted Test Period Ending Balance Sep-28** | **Reference to PNM Exhibit RNG-4 WP Plant - B-3 - Base, Link, Test** |
| 95 | Land and land rights | 360 | 14,068,010 | (3,025,835) | 11,042,175 | |
| 96 | Land Right of Way | 360.1 | 5,320,654 | (586,585) | 4,734,069 | |
| 97 | Structures and improvements | 361 | 84,429,182 | (4,442,317) | 79,986,864 | |
| 98 | Station equipment | 362 | 440,126,016 | (25,578,056) | 414,547,960 | |
| 99 | Computer Hardware | 363.1 | 28,249,051 | (3,215,628) | 25,033,422 | |
| 100 | Computer Software | 363.2 | 117,864,702 | (10,901,579) | 106,963,123 | |
| 101 | Communication Equipment | 363.3 | 57,838,523 | (11,196,144) | 46,642,379 | |
| 102 | Poles, towers and fixtures | 364 | 571,225,444 | (27,301,813) | 543,923,632 | |
| 103 | Overhead conductors, devices | 365 | 387,390,203 | (20,694,026) | 366,696,177 | |
| 104 | Underground conduit | 366 | 238,655,735 | (10,787,038) | 227,868,697 | |
| 105 | Undergrnd conductors, devices | 367 | 553,572,671 | (23,794,177) | 529,778,494 | |
| 106 | Line transformers | 368 | 317,485,033 | (6,624,823) | 310,860,210 | |
| 107 | Services | 369 | 114,353,199 | (2,137,803) | 112,215,396 | |
| 108 | Services - Underground | 369.1 | 216,979,085 | (7,262,445) | 209,716,640 | |
| 109 | Meters | 370 | 32,562,719 | 12,259,910 | 44,822,629 | |
| 110 | Meters - Grid Mod | 370.4 | 91,326,890 | (16,242,186) | 75,084,704 | |
| 111 | Installs customer premise | 371 | 9,151,530 | - | 9,151,530 | |
| 112 | Leased Flood Lighting | 371.1 | 307,353 | - | 307,353 | |
| 113 | Street lighting,signal system | 373 | 42,795,036 | (2,978,007) | 39,817,029 | |
| 114 | Asset Retirement Costs-Distr | 374 | - | - | - | |
| 115 | **Total Distribution Plant** | | **3,323,701,034** | **(164,508,554)** | **3,159,192,480** | Line 686, Col BH |
| 116 | | | | | | |
| 117 | General Plant | | | | | |
| 118 | Miscellaneous Intangible Plant | 303 | - | - | - | |
| 119 | Land and land rights | 389 | 1,937,568 | - | 1,937,568 | |
| 120 | Structures and improvements | 390 | 86,533,461 | (5,198,474) | 81,334,988 | |
| 121 | Structures and improvements-BPS Remodeling | 390.1 | 5,860,437 | 5,288 | 5,865,726 | |
| 122 | Structures and improvements-BPS Office Building | 390.2 | 5,945,142 | - | 5,945,142 | |
| 123 | Office furniture, equipment | 391 | 5,092,440 | (19,483) | 5,072,957 | |

| | A | B | AI | AJ | AK | AL |
|---|---|---|---|---|---|---|
| 1 | **Public Service Company of New Mexico** | | | | | |
| 2 | **Schedule B-2** | | | | | |
| 3 | **Original Cost of Plant In Service by Detail Account** | | | | | |
| 4 | **Base Period Ending 6/30/2026** | | | | | |
| 5 | **Test Period Ending 9/30/2028** | | | | | |
| 6 | **This schedule is sponsored by PNM Witness Gutierrez** | | | | | |
| 7 | **Utility Account** | **FERC** | **Test Period Ending Balance Sept-28** | **Total Test Period Adjustments RNG-4, B-3** | **Adjusted Test Period Ending Balance Sep-28** | **Reference to PNM Exhibit RNG-4 WP Plant - B-3 - Base, Link, Test** |
| 124 | Office Furniture and Equipment - PC System | 391.1 | - | - | - | |
| 125 | Office Furniture and Equipment - PC's | 391.2 | - | - | - | |
| 126 | Computer Hardware | 391.3 | - | - | - | |
| 127 | Computer Hardware - Solar | 391.5 | - | - | - | |
| 128 | Computer Hardware | 391.7 | - | - | - | |
| 129 | Transportation equipment | 392 | 5,270,298 | (102,322) | 5,167,976 | |
| 130 | Transportation equipment-Heavy | 392.1 | 4,727,710 | 88,330 | 4,816,040 | |
| 131 | Transportation equipment-Trailer | 392.2 | 8,665,475 | (20,328) | 8,645,147 | |
| 132 | Transportation Equipment - Leaseback | 392.4 | - | - | - | |
| 133 | Stores equipment | 393 | 93,808 | 2,860 | 96,668 | |
| 134 | Tools, shop, garage equipment | 394 | 20,931,830 | (15,326) | 20,916,504 | |
| 135 | Laboratory equipment | 395 | 206,265 | - | 206,265 | |
| 136 | Power operated equipment | 396 | 7,575,462 | (29,380) | 7,546,082 | |
| 137 | Computer Hardware | 397.1 | 866,398 | (3,839) | 862,559 | |
| 138 | Computer Software | 397.2 | 51,358,469 | (2,801,729) | 48,556,740 | |
| 139 | Communication Equipment | 397.3 | - | - | - | |
| 140 | Miscellaneous equipment | 398 | 2,431,480 | (519,565) | 1,911,915 | |
| 141 | ARO General Plant | 399.1 | 19,473 | - | 19,473 | |
| 142 | **Total General Plant** | | **207,515,715** | **(8,613,966)** | **198,901,749** | Lines 744, Col BH |
| 143 | | | | | | |
| 144 | **Total Electric Plant In Service** | 101/106 | **8,905,149,128** | **(324,598,640)** | **8,580,550,488** | Line 746, Col BH |
| 145 | | | | | | |
| 146 | **Electric Plant Purchased** | **102** | **-** | | **-** | |
| 147 | | | | | | |
| 148 | Acq Adj - Palo Verde Unit 1&2 (Drexel) | 114 | - | - | - | |
| 149 | Acq Adj - Palo Verde Unit 2 (First Chicago) | 114 | 14,491,601 | 416,027 | 14,907,628 | |
| 150 | Acq Adj - (EIP) | 114 | - | - | - | |
| 151 | **Electric Plant Acq Adj** | 114 | **14,491,601** | **416,027** | **14,907,628** | Line 753, Col BK |
| 152 | | | | | | |

| | A | B | AI | AJ | AK | AL |
|---|---|---|---|---|---|---|
| 1 | **Public Service Company of New Mexico** | | | | | |
| 2 | **Schedule B-2** | | | | | |
| 3 | **Original Cost of Plant In Service by Detail Account** | | | | | |
| 4 | **Base Period Ending 6/30/2026** | | | | | |
| 5 | **Test Period Ending 9/30/2028** | | | | | |
| 6 | **This schedule is sponsored by PNM Witness Gutierrez** | | | | | |
| 7 | **Utility Account** | **FERC** | **Test Period Ending Balance Sept-28** | **Total Test Period Adjustments RNG-4, B-3** | **Adjusted Test Period Ending Balance Sep-28** | **Reference to PNM Exhibit RNG-4 WP Plant - B-3 - Base, Link, Test** |
| 153 | **Total Plant** | | **8,919,640,729** | **(324,182,614)** | **8,595,458,116** | Line 755, Col BH |
| 154 | | | | | | |
| 155 | Corporate Plant - Unallocated | | | | | |
| 156 | Miscellaneous Intangible Plant | 303 | - | - | - | |
| 157 | Land and Land Rights | 389 | 5,133,327 | (724,578) | 4,408,750 | |
| 158 | Structures and Improvements | 390 | 88,106,141 | (25,870,357) | 62,235,785 | |
| 159 | Bulk Power Office Building Remodeling | 390.1 | - | - | - | |
| 160 | Bulk Power Office Building | 390.2 | - | - | - | |
| 161 | Office Furniture and Equipment | 391 | 2,420,153 | (992,009) | 1,428,144 | |
| 162 | Office Furniture and Equipment - PC System | 391.1 | - | - | - | |
| 163 | Office Furniture and Equipment - PC's | 391.2 | - | - | - | |
| 164 | Computer Hardware | 391.3 | - | - | - | |
| 165 | Computer Hardware - Solar | 391.5 | - | - | - | |
| 166 | Computer Hardware | 391.7 | - | - | - | |
| 167 | Transportation Equipment - Light | 392 | 350,330 | (131,864) | 218,466 | |
| 168 | Transportation Equipment - Heavy | 392.1 | 52,320 | (16,476) | 35,845 | |
| 169 | Transportation Equipment - Trailers | 392.2 | 10,272 | (3,866) | 6,406 | |
| 170 | Transportation Equipment - Leaseback | 392.4 | (324) | 167 | (157) | |
| 171 | Stores Equipment | 393 | - | - | - | |
| 172 | Tools, Shop & Garage Equipment | 394 | 436,729 | (156,736) | 279,993 | |
| 173 | Laboratory Equipment | 395 | - | - | - | |
| 174 | Power Operated Equipment | 396 | 26,134 | (8,230) | 17,905 | |
| 175 | Communication Equipment | 397 | - | - | - | |
| 176 | Computer Hardware | 397.1 | 34,054,955 | (12,987,730) | 21,067,225 | |
| 177 | Computer Software | 397.2 | 316,266,745 | (116,488,118) | 199,778,626 | |
| 178 | Communication Equipment | 397.3 | 1,958,922 | 43,900 | 2,002,822 | |
| 179 | Communication Equipment | 397.2 | - | - | - | |
| 180 | Communication Equipment | 397.3 | - | - | - | |
| 181 | Miscellaneous Equipment | 398 | - | - | - | |

| | A | B | AI | AJ | AK | AL |
|---|---|---|---|---|---|---|
| 1 | **Public Service Company of New Mexico** | | | | | |
| 2 | **Schedule B-2** | | | | | |
| 3 | **Original Cost of Plant In Service by Detail Account** | | | | | |
| 4 | **Base Period Ending 6/30/2026** | | | | | |
| 5 | **Test Period Ending 9/30/2028** | | | | | |
| 6 | **This schedule is sponsored by PNM Witness Gutierrez** | | | | | |
| 7 | **Utility Account** | **FERC** | **Test Period Ending Balance Sept-28** | **Total Test Period Adjustments RNG-4, B-3** | **Adjusted Test Period Ending Balance Sep-28** | **Reference to PNM Exhibit RNG-4 WP Plant - B-3 - Base, Link, Test** |
| 182 | ARO General Plant-1 | 399 | - | - | - | |
| 183 | **Total Corporate** | | **448,815,705** | **(157,335,897)** | **291,479,808** | Line 786, Col BH |
| 184 | | | | | | |
| 185 | **Total Electric Plant In Service-Corporate** | 101/106 | **448,815,705** | **(157,335,897)** | **291,479,808** | |
| 186 | | | | | | |
| 187 | **Electric Plant Purchased-Corporate** | 102 | **-** | | **-** | |
| 188 | | | | | | |
| 189 | **Electric Plant Acq Adj-Corporate** | 114 | - | | - | |
| 190 | | | | | | |
| 191 | **Total Corporate** | | **448,815,705** | **(157,335,897)** | **291,479,808** | |
| 192 | | | | | | |
| 193 | **Total Electric Plant In Service w/Corporate** | **101/106** | **9,353,964,833** | **(481,934,537)** | **8,872,030,297** | Line 788, Col BH |
| 194 | | | | | | |
| 195 | **Electric Plant Purchased w/Corporate** | **102** | **-** | **-** | **-** | |
| 196 | | | | | | |
| 197 | **Electric Plant Acq Adj w/Corporate** | **114** | **14,491,601** | **416,027** | **14,907,628** | Line 792, Col BH |
| 198 | | | | | | |
| 199 | **Total Plant In Service w/Corporate** | | **9,368,456,434** | **(481,518,510)** | **8,886,937,924** | Line 794, Col BH |

| | A |
|---|---|
| 1 | **Public Service Company of New Mexico** |
| 2 | **Schedule B-2** |
| 3 | **Original Cost of Plant In Service by Detail Account (Notes)** |
| 4 | **Base Period Ending 6/30/2026** |
| 5 | **Test Period Ending 9/30/2028** |
| 6 | **This schedule is sponsored by PNM Witness Gutierrez** |
| 7 | |
| 8 | Note 1: Please Refer to PNM Exhibit RNG-4, B-3 (Notes) for all note references. |
| 9 | Base period data is historical information from the Company's Book Balance Amounts. |

# PNM Schedule B-3

Original cost of plant in service by monthly balances

| | A | B | C | D | E | F | G | H | I |
|---|---|---|---|---|---|---|---|---|---|
| 1 | **Public Service Company of New Mexico** | | | | | | | | |
| 2 | **Schedule B-3** | | | | | | | | |
| 3 | **Original Cost of Plant In Service by Monthly Balances** | | | | | | | | |
| 4 | **Base Period Ending 6/30/2026** | | | | | | | | |
| 5 | **Test Period Ending 9/30/2028** | | | | | | | | |
| 6 | Link to WP Plant Lead Sheet | | | | | | | | |
| 7 | | | | | | | | | |
| 8 | **Base Period data is historical Information from the Company's Books and Records.** | | | | | | | | |
| 9 | This schedule is sponsored by PNM Witness Gutierrez | | | | | | | | |
| 10 | **Location** | **Location Number Note 6** | **FERC** | **Loc/ FERC** | **FERC Description** | **Base Period Beginning Balance 7/1/25** | **Balance 8/1/25** | **Balance 9/1/25** | **Balance 10/1/25** |
| 11 | | | | | | | | | |
| 12 | **Production Plant** | | | | | | | | |
| 13 | **Steam Production** | | | | | | | | |
| 56 | **All - Steam** | | | | | | | | |
| 57 | | | 310 | | Land and Land Rights | 618,487 | 618,487 | 618,487 | 618,487 |
| 58 | | | 310.1 | | Land Right of Way | 25,958 | 25,958 | 25,958 | 25,958 |
| 59 | | | 311 | | Structures & Improvements | 34,030,341 | 34,037,654 | 34,037,714 | 34,039,503 |
| 60 | | | 312 | | Boiler Plant Equipment | 311,210,647 | 311,582,540 | 311,661,196 | 311,674,560 |
| 61 | | | 314 | | Turbogenerator Units | 72,876,461 | 76,255,311 | 76,337,706 | 76,220,176 |
| 62 | | | 315 | | Accessory Electric Equipment | 25,464,048 | 25,469,455 | 25,497,029 | 25,497,419 |
| 63 | | | 315.01 | | Computer Hardware | - | - | - | - |
| 64 | | | 315.02 | | Computer Software | 1,346,383 | 1,346,384 | 1,346,384 | 1,347,120 |
| 65 | | | 315.03 | | Communication Equipment | 322,679 | 322,679 | 322,679 | 322,679 |
| 66 | | | 316 | | Misc Power Plant Equipment | 34,637,657 | 34,713,957 | 34,719,537 | 34,722,077 |
| 67 | | | 317 | | Asset Retirement Costs - Steam | 7,441,454 | 7,441,454 | 7,441,454 | 7,441,454 |
| 68 | **Total Steam Production Gross Plant** | | | | | 487,974,115 | 491,813,879 | 492,008,144 | 491,909,434 |
| 69 | | | | | | | | | |
| 70 | | | | | | | | | |
| 71 | **Nuclear Production** | | | | | | | | |
| 129 | **All - Nuclear** | | | | | | | | |
| 130 | | | 320 | | Land and Land Rights | 439,822 | 439,822 | 439,822 | 439,822 |
| 131 | | | 320.1 | | Land - Right of Way | 44,622 | 44,622 | 44,622 | 44,622 |
| 132 | | | 321 | | Structures and Improvements | 202,237,760 | 202,250,032 | 202,251,425 | 202,105,511 |
| 133 | | | 322 | | Reactor Plant Equipment | 333,424,065 | 334,094,073 | 334,065,447 | 333,868,751 |
| 134 | | | 323 | | Turbogenerator Units | 112,785,657 | 113,135,477 | 113,152,376 | 113,099,942 |
| 135 | | | 324 | | Accessory Electric Equipment | 56,038,293 | 56,212,275 | 56,209,099 | 56,141,640 |
| 136 | | | 324.01 | | Computer Hardware | - | - | - | - |
| 137 | | | 324.02 | | Computer Software | 5,397,853 | 5,398,115 | 5,398,115 | 5,398,115 |
| 138 | | | 324.03 | | Communication Equipment | 408,257 | 408,257 | 408,257 | 408,257 |
| 139 | | | 325 | | Misc Power Plant Equipment | 70,129,985 | 70,389,097 | 70,383,910 | 69,664,567 |
| 140 | | | 326 | | Asset Retirement Costs Nuclear Prod Plant | 12,831,931 | 12,831,931 | 12,831,931 | 12,831,931 |
| 141 | **Total Nuclear Production Gross Plant** | | | | | 793,738,244 | 795,203,700 | 795,185,005 | 794,003,159 |

| | A | B | C | D | E | F | G | H | I |
|---|---|---|---|---|---|---|---|---|---|
| 1 | **Public Service Company of New Mexico** | | | | | | | | |
| 2 | **Schedule B-3** | | | | | | | | |
| 3 | **Original Cost of Plant In Service by Monthly Balances** | | | | | | | | |
| 4 | **Base Period Ending 6/30/2026** | | | | | | | | |
| 5 | **Test Period Ending 9/30/2028** | | | | | | | | |
| 6 | Link to WP Plant Lead Sheet | | | | | | | | |
| 7 | | | | | | | | | |
| 8 | **Base Period data is historical Information from the Company's Books and Records.** | | | | | | | | |
| 9 | This schedule is sponsored by PNM Witness Gutierrez | | | | | | | | |
| 10 | **Location** | **Location Number Note 6** | **FERC** | **Loc/ FERC** | **FERC Description** | **Base Period Beginning Balance 7/1/25** | **Balance 8/1/25** | **Balance 9/1/25** | **Balance 10/1/25** |
| 142 | | | | | | | | | |
| 143 | | | | | | | | | |
| 144 | **Solar Production** | | | | | | | | |
| 237 | **All - Solar** | | | | | | | | |
| 238 | | | 338.01 | | Land & Land Rights | 11,040,948 | 11,040,948 | 11,040,948 | 11,040,948 |
| 239 | | | 338.02 | | Structures and Improvements | 268,299 | 268,299 | 268,299 | 268,299 |
| 240 | | | 338.04 | | Solar Panels | 277,545,592 | 277,545,592 | 277,545,592 | 277,545,592 |
| 241 | | | 338.05 | | Collector System | 8,264,812 | 8,264,812 | 8,264,812 | 8,264,812 |
| 242 | | | 338.07 | | Solar Inverters | - | - | - | - |
| 243 | | | 338.08 | | Other Accessory Electrical Equipment | 33,903,100 | 33,903,100 | 33,903,100 | 33,903,100 |
| 244 | | | 338.09 | | Computer Hardware | 51,760 | 51,760 | 51,760 | 51,760 |
| 245 | | | 338.10 | | Computer Software | - | - | - | - |
| 246 | | | 338.11 | | Communication Equipment | 637,577 | 637,577 | 637,577 | 637,577 |
| 247 | | | 338.12 | | Misc. Power Plant Equipment | 5,228,178 | 5,228,178 | 5,228,178 | 5,228,178 |
| 248 | **Total Solar Production Gross Plant** | | | | | 336,940,266 | 336,940,266 | 336,940,266 | 336,940,266 |
| 249 | | | | | | | | | |
| 250 | **Other Production** | | | | | | | | |
| 251 | | | | | | | | | |
| 252 | **Other Production - Gas:** | | | | | | | | |
| 339 | **All - Gas** | | 340 | | Land and Land Rights | 7,079,884 | 7,079,884 | 7,079,884 | 7,079,884 |
| 340 | | | 340.1 | | Land - Right of Way | 1,959,313 | 1,959,313 | 1,959,313 | 1,959,313 |
| 341 | | | 341 | | Structures and Improvements | 94,104,168 | 94,122,426 | 94,120,797 | 94,120,797 |
| 342 | | | 342 | | Fuel Holders, Producers, Accessories | 113,190,800 | 114,365,653 | 114,371,696 | 114,391,004 |
| 343 | | | 343 | | Prime Movers | - | - | - | - |
| 344 | | | 344 | | Generators | 260,760,958 | 261,649,583 | 261,923,867 | 261,926,742 |
| 345 | | | 345 | | Accessory Electric Equipment | 24,022,366 | 24,022,581 | 24,022,581 | 24,022,581 |
| 346 | | | 345.01 | | Computer Hardware | 53,885 | 53,885 | 53,885 | 53,885 |
| 347 | | | 345.02 | | Computer Software | 117,298 | 117,298 | 117,298 | 128,653 |
| 348 | | | 345.03 | | Communication Equipment | 38,862 | 38,862 | 38,862 | 38,862 |
| 349 | | | 346 | | Misc Power Plant Equipment | 46,524,239 | 46,684,110 | 46,092,942 | 45,959,008 |
| 350 | | | 347 | | Asset Retirement Costs - Other Production | 3,590,447 | 3,590,447 | 3,590,447 | 3,590,447 |
| 351 | **Total Other Production Plant - Gas** | | | | | 551,442,220 | 553,684,042 | 553,371,571 | 553,271,175 |
| 352 | | | | | | | | | |
| 353 | | | | | | | | | |
| 354 | **Total Other Production Gross Plant** | | | | | 551,442,220 | 553,684,042 | 553,371,571 | 553,271,175 |
| 355 | | | | | | | | | |
| 356 | **Total Gross Plant Production** | | | | | 2,170,094,845 | 2,177,641,888 | 2,177,504,986 | 2,176,124,034 |
| 357 | | | | | | | | | |
| 358 | | | | | | | | | |

| | A | B | C | D | E | F | G | H | I |
|---|---|---|---|---|---|---|---|---|---|
| 1 | **Public Service Company of New Mexico** | | | | | | | | |
| 2 | **Schedule B-3** | | | | | | | | |
| 3 | **Original Cost of Plant In Service by Monthly Balances** | | | | | | | | |
| 4 | **Base Period Ending 6/30/2026** | | | | | | | | |
| 5 | **Test Period Ending 9/30/2028** | | | | | | | | |
| 6 | Link to WP Plant Lead Sheet | | | | | | | | |
| 7 | | | | | | | | | |
| 8 | **Base Period data is historical Information from the Company's Books and Records.** | | | | | | | | |
| 9 | This schedule is sponsored by PNM Witness Gutierrez | | | | | | | | |
| 10 | **Location** | **Location Number Note 6** | **FERC** | **Loc/ FERC** | **FERC Description** | **Base Period Beginning Balance 7/1/25** | **Balance 8/1/25** | **Balance 9/1/25** | **Balance 10/1/25** |
| 359 | **Total Gross Energy Storage Plant** | | | | | | | | |
| 386 | **All - Energy Storage** | | 387.01 | 387.01 | Land & Land Rights | - | - | - | - |
| 387 | | | 387.02 | 387.02 | Structures & Improvements | 667,798 | 667,798 | 667,798 | 667,798 |
| 388 | | | 387.03 | 387.03 | Energy Storage Equipment | 19,475,685 | 19,475,685 | 19,475,685 | 19,475,685 |
| 389 | | | 387.05 | 387.05 | Collector System | 4,827,171 | 4,827,171 | 4,827,171 | 4,827,171 |
| 390 | | | 387.06 | 387.06 | Generator Step-Up Transformers (GSU) | 1,712,696 | 1,712,696 | 1,712,696 | 1,712,696 |
| 391 | | | 387.07 | 387.07 | Inverters | - | - | - | - |
| 392 | | | 387.08 | 387.08 | Computer Hardware | - | - | - | - |
| 393 | | | 387.09 | 387.09 | Computer Software | 605,006 | 605,006 | 605,006 | 605,006 |
| 394 | | | 387.10 | 387.10 | Communication Equipment | 545,603 | 545,603 | 545,603 | 545,603 |
| 395 | | | 387.11 | 387.11 | Misc. Energy Storage Equipment | 4,531,065 | 4,531,065 | 4,531,065 | 4,531,065 |
| 396 | | | 387.12 | 387.12 | Asset Retirement Costs for Energy Storage | - | - | - | - |
| 397 | **Total Gross Energy Storage Plant** | | | | | 32,365,024 | 32,365,024 | 32,365,024 | 32,365,024 |
| 398 | | | | | | | | | |
| 399 | | | | | | | | | |
| 400 | **Gross Plant Transmission Plant** | | | | | | | | |
| 401 | | | | | | | | | |
| 402 | | | | | | | | | |
| 453 | **All - Transmission** | | | | | | | | |
| 454 | | 650 | 350 | 650350 | Land and Land Rights | 80,575,716 | 80,575,944 | 80,576,025 | 80,576,025 |
| 455 | | 650 | 350.1 | 650350.1 | Land - Right of Way | 53,208,308 | 53,208,425 | 53,214,996 | 53,254,061 |
| 456 | | 650 | 351.01 | 650350.01 | Computer Hardware | 14,315,535 | 14,315,899 | 14,318,274 | 14,404,702 |
| 457 | | 650 | 351.02 | 650350.02 | Computer Software | 8,257,662 | 8,258,602 | 8,258,601 | 8,258,601 |
| 458 | | 650 | 351.03 | 650350.03 | Communication Equipment | 42,848,934 | 42,855,647 | 43,070,146 | 43,460,586 |
| 459 | | 650 | 352 | 650352 | Structures and Improvements | 216,672,372 | 216,680,851 | 217,825,340 | 217,973,217 |
| 460 | | 650 | 353 | 650353 | Station Equipment | 907,450,615 | 907,481,514 | 909,444,320 | 910,937,298 |
| 461 | | 650 | 353.1 | 650353.1 | Station Equipment - Step-up Xfmr and Aux | 12,193,036 | 12,193,036 | 12,193,036 | 12,193,036 |
| 462 | | 650 | 354 | 650354 | Towers and Fixtures | 65,791,175 | 65,460,010 | 65,460,010 | 65,460,010 |
| 463 | | 650 | 355 | 650355 | Poles and Fixtures | 542,976,420 | 543,310,327 | 543,299,133 | 543,593,491 |
| 464 | | 650 | 356 | 650356 | Overhead Conductors and Devices | 227,346,768 | 227,347,371 | 227,350,862 | 227,639,445 |
| 465 | | 650 | 357 | 650357 | Underground Conduit | 185,394 | 185,394 | 185,394 | 185,394 |
| 466 | | 650 | 359 | 650359 | Roads and Trails | 9,800,590 | 9,800,590 | 9,800,590 | 9,800,590 |
| 467 | **Total Gross Plant Transmission Plant** | | | | | 2,181,622,525 | 2,181,673,609 | 2,184,996,729 | 2,187,736,456 |
| 468 | | | | | | | | | |

| | A | B | C | D | E | F | G | H | I |
|---|---|---|---|---|---|---|---|---|---|
| 1 | **Public Service Company of New Mexico** | | | | | | | | |
| 2 | **Schedule B-3** | | | | | | | | |
| 3 | **Original Cost of Plant In Service by Monthly Balances** | | | | | | | | |
| 4 | **Base Period Ending 6/30/2026** | | | | | | | | |
| 5 | **Test Period Ending 9/30/2028** | | | | | | | | |
| 6 | Link to WP Plant Lead Sheet | | | | | | | | |
| 7 | | | | | | | | | |
| 8 | **Base Period data is historical Information from the Company's Books and Records.** | | | | | | | | |
| 9 | This schedule is sponsored by PNM Witness Gutierrez | | | | | | | | |
| 10 | **Location** | **Location Number Note 6** | **FERC** | **Loc/ FERC** | **FERC Description** | **Base Period Beginning Balance 7/1/25** | **Balance 8/1/25** | **Balance 9/1/25** | **Balance 10/1/25** |
| 469 | | | | | | | | | |
| 470 | | | | | | | | | |
| 471 | **Gross Plant Distribution Plant** | | | | | | | | |
| 665 | **All - Distribution** | | | | | | | | |
| 666 | | | 360 | | Land and Land Rights | 10,357,185 | 10,357,306 | 10,357,314 | 10,357,518 |
| 667 | | | 360.1 | | Land - Right of Way | 2,121,278 | 2,121,278 | 2,121,278 | 2,121,278 |
| 668 | | | 361 | | Structures and Improvements | 43,327,822 | 43,333,559 | 43,335,723 | 44,896,718 |
| 669 | | | 362 | | Station Equipment | 320,802,895 | 322,074,803 | 322,307,958 | 322,686,848 |
| 670 | | | 363.01 | | Computer Hardware | 3,220,875 | 3,217,351 | 3,391,833 | 3,499,316 |
| 671 | | | 363.02 | | Computer Software | 28,948,742 | 28,951,387 | 28,948,742 | 29,229,285 |
| 672 | | | 363.03 | | Communication Equipment | 14,864,799 | 15,155,076 | 15,249,649 | 15,139,909 |
| 673 | | | 364 | | Poles, Towers and Fixtures | 402,400,674 | 405,232,976 | 410,380,059 | 416,743,836 |
| 674 | | | 365 | | Overhead Conductors and Devices | 272,586,510 | 273,712,581 | 276,082,669 | 279,243,989 |
| 675 | | | 366 | | Underground Conduit | 177,783,509 | 178,467,181 | 179,491,963 | 181,845,367 |
| 676 | | | 367 | | Underground Conductors and Devices | 425,418,098 | 427,937,872 | 429,539,432 | 436,228,290 |
| 677 | | | 368 | | Line Transformers | 279,368,276 | 280,677,846 | 281,306,524 | 283,083,357 |
| 678 | | | 369 | | Services | 98,148,074 | 99,693,955 | 99,693,955 | 99,693,955 |
| 679 | | | 369.1 | | Services - Underground | 161,719,390 | 166,896,757 | 166,896,757 | 166,896,757 |
| 680 | | | 370 | | Meters Net Plant - PNM | 64,538,791 | 66,123,940 | 66,264,005 | 66,562,200 |
| 681 | | | 370.4 | | Meters Net Plant - Grid Mod | - | - | - | - |
| 682 | | | 371 | | Installations on Customers' Premises | 9,151,530 | 9,151,530 | 9,151,530 | 9,151,530 |
| 683 | | | 371.1 | | Leased Flood Lighting | 307,353 | 307,353 | 307,353 | 307,353 |
| 684 | | | 373 | | Street Lighting and Signal Systems | 28,121,698 | 28,180,510 | 28,249,936 | 28,290,652 |
| 685 | | | 374 | | Asset Retirement Costs - Distribution | 14,202 | 14,202 | 14,202 | 14,202 |
| 686 | **Total Gross Plant Distribution Plant** | | | | | 2,343,201,699 | 2,361,607,464 | 2,373,090,881 | 2,395,992,358 |
| 687 | | | | | | | | | |

| | A | B | C | D | E | F | G | H | I |
|---|---|---|---|---|---|---|---|---|---|
| 1 | **Public Service Company of New Mexico** | | | | | | | | |
| 2 | **Schedule B-3** | | | | | | | | |
| 3 | **Original Cost of Plant In Service by Monthly Balances** | | | | | | | | |
| 4 | **Base Period Ending 6/30/2026** | | | | | | | | |
| 5 | **Test Period Ending 9/30/2028** | | | | | | | | |
| 6 | Link to WP Plant Lead Sheet | | | | | | | | |
| 7 | | | | | | | | | |
| 8 | **Base Period data is historical Information from the Company's Books and Records.** | | | | | | | | |
| 9 | This schedule is sponsored by PNM Witness Gutierrez | | | | | | | | |
| 10 | **Location** | **Location Number Note 6** | **FERC** | **Loc/ FERC** | **FERC Description** | **Base Period Beginning Balance 7/1/25** | **Balance 8/1/25** | **Balance 9/1/25** | **Balance 10/1/25** |
| 688 | | | | | | | | | |
| 689 | **Gross Plant G&I Plant (303,389-399)** | | | | | | | | |
| 719 | **Total General & Intangible Plant** | | | | | | | | |
| 720 | | | 303 | 303 | Miscellaneous Intangible Plant | - | - | - | - |
| 721 | | | 389 | 389 | Land and Land Rights | 1,937,568 | 1,937,568 | 1,937,568 | 1,937,568 |
| 722 | | | 390 | 390 | Structures and Improvements | 75,244,024 | 75,246,018 | 75,246,018 | 73,337,109 |
| 723 | | | 390.1 | 390.1 | Bulk Power Office Building Remodeling | 5,904,067 | 5,904,067 | 5,904,067 | 5,904,067 |
| 724 | | | 390.2 | 390.2 | Bulk Power Office Building | 5,965,530 | 5,965,530 | 5,965,530 | 5,965,530 |
| 725 | | | 391 | 391 | Office Furniture and Equipment | 5,015,474 | 5,015,686 | 5,052,287 | 5,061,360 |
| 726 | | | 391.1 | 391.1 | Office Furniture and Equipment - PC System | - | - | - | - |
| 727 | | | 391.2 | 391.2 | Office Furniture and Equipment - PC's | - | - | - | - |
| 728 | | | 391.3 | 391.3 | Computer Hardware | - | - | - | 311 |
| 729 | | | 391.5 | 391.5 | Computer Hardware - Solar | - | - | - | - |
| 730 | | | 391.7 | 391.7 | Computer Hardware | - | - | - | - |
| 731 | | | 392 | 392 | Transportation Equipment - Light | 4,234,699 | 4,234,699 | 4,234,699 | 4,234,699 |
| 732 | | | 392.1 | 392.1 | Transportation Equipment - Heavy | 5,035,647 | 5,035,647 | 5,035,647 | 5,035,647 |
| 733 | | | 392.2 | 392.2 | Transportation Equipment - Trailers | 8,522,596 | 8,522,596 | 8,522,596 | 8,522,673 |
| 734 | | | 392.4 | 392.4 | Transportation Equipment - Leaseback | - | - | - | - |
| 735 | | | 393 | 393 | Stores Equipment | 97,939 | 97,939 | 97,939 | 97,939 |
| 736 | | | 394 | 394 | Tools, Shop & Garage Equipment | 19,891,159 | 19,911,908 | 19,999,465 | 20,024,616 |
| 737 | | | 395 | 395 | Laboratory Equipment | 206,265 | 206,265 | 206,265 | 206,265 |
| 738 | | | 396 | 396 | Power Operated Equipment | 7,321,724 | 7,321,724 | 7,321,724 | 7,321,724 |
| 739 | | | 397.01 | 397.01 | Computer Hardware | 1,878,678 | 1,878,384 | 1,878,384 | 1,878,951 |
| 740 | | | 397.02 | 397.02 | Computer Software | 26,238,792 | 26,236,147 | 26,236,147 | 26,236,883 |
| 741 | | | 397.03 | 397.03 | Communication Equipment | (86) | 4,685 | - | 1,778,437 |
| 742 | | | 398 | 398 | Miscellaneous Equipment | 1,778,437 | 1,778,437 | 1,778,437 | 19,473 |
| 743 | | | 399.1 | 399.1 | ARO General Plant-1 | 19,473 | 19,473 | 19,473 | - |
| 744 | **Total Gross Plant G&I Plant - PNM** | | | | | 169,291,985 | 169,316,773 | 169,436,246 | 167,563,253 |
| 745 | | | | | | | | | |
| 746 | **Total Electric Plant In Service** | | 101/106 | | | 6,896,576,079 | 6,922,604,758 | 6,937,393,866 | 6,959,781,125 |
| 747 | | | | | | | | | |
| 748 | **Electric Plant Purchased** | | 102 | | | | | | |
| 749 | | | | | | | | | |
| 750 | **Electric Plant Acquisition Adjustment** | | | | Acq. Adj. - Palo Verde Unit 1&2 (Drexel) | | | | |
| 751 | | | | | Acq. Adj. - Palo Verde Unit 2 (First Chicago) | 17,195,774 | 17,126,436 | 17,057,098 | 16,987,761 |
| 752 | | | | | Acq. Adj. - (EIP) | 292,984 | 244,153 | 195,322 | 146,492 |
| 753 | **Electric Plant Acquisition Adjustment** | | 114 | | | 17,488,758 | 17,370,589 | 17,252,421 | 17,134,252 |
| 754 | | | | | | | | | |
| 755 | **Total Electric Plant** | | | | | 6,914,064,837 | 6,939,975,348 | 6,954,646,287 | 6,976,915,377 |
| 756 | | | | | | | | | |
| 757 | | | | | | | | | |

| | A | B | C | D | E | F | G | H | I |
|---|---|---|---|---|---|---|---|---|---|
| 1 | **Public Service Company of New Mexico** | | | | | | | | |
| 2 | **Schedule B-3** | | | | | | | | |
| 3 | **Original Cost of Plant In Service by Monthly Balances** | | | | | | | | |
| 4 | **Base Period Ending 6/30/2026** | | | | | | | | |
| 5 | **Test Period Ending 9/30/2028** | | | | | | | | |
| 6 | Link to WP Plant Lead Sheet | | | | | | | | |
| 7 | | | | | | | | | |
| 8 | **Base Period data is historical Information from the Company's Books and Records.** | | | | | | | | |
| 9 | This schedule is sponsored by PNM Witness Gutierrez | | | | | | | | |
| 10 | **Location** | **Location Number Note 6** | **FERC** | **Loc/ FERC** | **FERC Description** | **Base Period Beginning Balance 7/1/25** | **Balance 8/1/25** | **Balance 9/1/25** | **Balance 10/1/25** |
| 758 | **Corporate Unallocated** | 900 | 303 | 900303 | Miscellaneous Intangible Plant | - | - | - | - |
| 759 | | 900 | 389 | 900389 | Land and Land Rights | 5,133,327 | 5,133,327 | 5,133,327 | 5,133,327 |
| 760 | | 900 | 390 | 900390 | Structures and Improvements | 64,774,362 | 64,774,397 | 64,774,397 | 63,989,137 |
| 761 | | 900 | 390.1 | 900390.1 | Bulk Power Office Building Remodeling | - | - | - | - |
| 762 | | 900 | 390.2 | 900390.2 | Bulk Power Office Building | - | - | - | - |
| 763 | | 900 | 391 | 900391 | Office Furniture and Equipment | 871,391 | 874,018 | 874,018 | 893,939 |
| 764 | | 900 | 391.1 | 900391.1 | Office Furniture and Equipment - PC System | - | - | - | - |
| 765 | | 900 | 391.2 | 900391.2 | Office Furniture and Equipment - PC's | - | - | - | - |
| 766 | | 900 | 391.3 | 900391.3 | Computer Hardware | - | - | - | - |
| 767 | | 900 | 391.5 | 900391.5 | Computer Hardware - Solar | - | - | - | - |
| 768 | | 900 | 391.7 | 900391.7 | Computer Hardware | - | - | - | - |
| 769 | | 900 | 392 | 900392 | Transportation Equipment - Light | 318,774 | 318,848 | 318,848 | 318,848 |
| 770 | | 900 | 392.1 | 900392.1 | Transportation Equipment - Heavy | 52,320 | 52,320 | 52,320 | 52,320 |
| 771 | | 900 | 392.2 | 900392.2 | Transportation Equipment - Trailers | 10,272 | 10,272 | 10,272 | 10,272 |
| 772 | | 900 | 392.4 | 900392.4 | Transportation Equipment - Leaseback | - | - | - | - |
| 773 | | 900 | 393 | 900393 | Stores Equipment | - | - | - | - |
| 774 | | 900 | 394 | 900394 | Tools, Shop & Garage Equipment | 582,133 | 582,133 | 582,133 | 582,133 |
| 775 | | 900 | 395 | 900395 | Laboratory Equipment | - | - | - | - |
| 776 | | 900 | 396 | 900396 | Power Operated Equipment | 26,134 | 26,134 | 26,134 | 26,134 |
| 777 | | 900 | 397 | 900397 | Communication Equipment | - | - | - | - |
| 778 | | 900 | 397.01 | 900397.01 | Computer Hardware | 45,119,422 | 45,119,423 | 45,139,745 | 45,105,700 |
| 779 | | 900 | 397.02 | 900397.02 | Computer Software | 164,917,035 | 164,917,132 | 170,139,119 | 182,500,242 |
| 780 | | 900 | 397.03 | 900397.03 | Communication Equipment | 5,095,511 | 5,095,511 | 5,095,511 | 5,069,211 |
| 781 | | 900 | 397.2 | 900397.2 | Communication Equipment | - | - | - | - |
| 782 | | 900 | 397.3 | 900397.3 | Communication Equipment | - | - | - | - |
| 783 | | 900 | 398 | 900398 | Miscellaneous Equipment | - | - | - | - |
| 784 | | 900 | 399.1 | 900399.1 | ARO General Plant-1 | - | - | - | - |
| 785 | | | | | | | | | |
| 786 | **Total Corporate Unallocated** | | | | | 286,900,681 | 286,903,516 | 292,145,825 | 303,681,264 |
| 787 | | | | | | | | | |
| 788 | **al Electric Plant In Service - with Corporate** | | 101/106 | | | 7,183,476,760 | 7,209,508,275 | 7,229,539,691 | 7,263,462,389 |
| 790 | **Electric Plant Purchased - with Corporate** | | 102 | | | | | | |
| 792 | **Electric Plant Acq. Adj. - with Corporate** | | 114 | | | 17,488,758 | 17,370,589 | 17,252,421 | 17,134,252 |
| 793 | | | | | | | | | |
| 794 | **Total Electric Plant - with Corporate** | | | | | 7,200,965,518 | 7,226,878,864 | 7,246,792,112 | 7,280,596,641 |

| | A | B | C | D | E | J | K | L | M |
|---|---|---|---|---|---|---|---|---|---|
| 1 | **Public Service Company of New Mexico** | | | | | | | | |
| 2 | **Schedule B-3** | | | | | | | | |
| 3 | **Original Cost of Plant In Service by Monthly Balances** | | | | | | | | |
| 4 | **Base Period Ending 6/30/2026** | | | | | | | | |
| 5 | **Test Period Ending 9/30/2028** | | | | | | | | |
| 6 | Link to WP Plant Lead Sheet | | | | | | | | |
| 7 | | | | | | | | | |
| 8 | **Base Period data is historical Information from the Company's Books and Records.** | | | | | | | | |
| 9 | This schedule is sponsored by PNM Witness Gutierrez | | | | | | | | |
| 10 | **Location** | **Location Number Note 6** | **FERC** | **Loc/ FERC** | **FERC Description** | **Balance 11/1/25** | **Balance 12/1/25** | **Balance 1/1/26** | **Balance 2/1/26** |
| 11 | | | | | | | | | |
| 12 | **Production Plant** | | | | | | | | |
| 13 | **Steam Production** | | | | | | | | |
| 56 | **All - Steam** | | | | | | | | |
| 57 | | | 310 | | Land and Land Rights | 618,487 | 618,487 | 618,487 | 618,487 |
| 58 | | | 310.1 | | Land Right of Way | 25,958 | 25,958 | 25,958 | 25,958 |
| 59 | | | 311 | | Structures & Improvements | 34,035,349 | 34,086,131 | 34,071,454 | 34,076,127 |
| 60 | | | 312 | | Boiler Plant Equipment | 311,494,642 | 310,894,145 | 311,253,963 | 311,405,133 |
| 61 | | | 314 | | Turbogenerator Units | 76,343,000 | 76,239,449 | 76,210,992 | 76,812,784 |
| 62 | | | 315 | | Accessory Electric Equipment | 25,536,772 | 25,535,331 | 25,547,796 | 25,558,852 |
| 63 | | | 315.01 | | Computer Hardware | - | - | - | - |
| 64 | | | 315.02 | | Computer Software | 1,347,869 | 1,360,134 | 1,362,229 | 1,362,246 |
| 65 | | | 315.03 | | Communication Equipment | 322,679 | 322,679 | 322,679 | 322,679 |
| 66 | | | 316 | | Misc Power Plant Equipment | 34,723,481 | 35,098,438 | 35,589,901 | 35,634,217 |
| 67 | | | 317 | | Asset Retirement Costs - Steam | 7,441,454 | 7,441,454 | 10,249,476 | 10,249,476 |
| 68 | **Total Steam Production Gross Plant** | | | | | 491,889,691 | 491,622,206 | 495,252,936 | 496,065,960 |
| 69 | | | | | | | | | |
| 70 | | | | | | | | | |
| 71 | **Nuclear Production** | | | | | | | | |
| 129 | **All - Nuclear** | | | | | | | | |
| 130 | | | 320 | | Land and Land Rights | 439,822 | 439,822 | 439,822 | 439,822 |
| 131 | | | 320.1 | | Land - Right of Way | 44,622 | 44,622 | 44,622 | 44,622 |
| 132 | | | 321 | | Structures and Improvements | 202,105,728 | 201,782,708 | 204,522,524 | 204,535,280 |
| 133 | | | 322 | | Reactor Plant Equipment | 333,737,874 | 333,724,340 | 332,986,727 | 332,971,325 |
| 134 | | | 323 | | Turbogenerator Units | 113,088,920 | 113,085,960 | 112,350,939 | 112,351,141 |
| 135 | | | 324 | | Accessory Electric Equipment | 56,151,566 | 56,173,733 | 56,228,721 | 56,229,511 |
| 136 | | | 324.01 | | Computer Hardware | - | - | - | - |
| 137 | | | 324.02 | | Computer Software | 5,398,115 | 5,747,013 | 12,182,669 | 12,213,406 |
| 138 | | | 324.03 | | Communication Equipment | 408,257 | 408,257 | 408,257 | 408,257 |
| 139 | | | 325 | | Misc Power Plant Equipment | 69,690,630 | 69,668,064 | 69,634,964 | 69,631,867 |
| 140 | | | 326 | | Asset Retirement Costs Nuclear Prod Plant | 12,831,931 | 12,831,931 | 12,831,931 | 12,831,931 |
| 141 | **Total Nuclear Production Gross Plant** | | | | | 793,897,465 | 793,906,451 | 801,631,177 | 801,657,162 |

| | A | B | C | D | E | J | K | L | M |
|---|---|---|---|---|---|---|---|---|---|
| 1 | **Public Service Company of New Mexico** | | | | | | | | |
| 2 | **Schedule B-3** | | | | | | | | |
| 3 | **Original Cost of Plant In Service by Monthly Balances** | | | | | | | | |
| 4 | **Base Period Ending 6/30/2026** | | | | | | | | |
| 5 | **Test Period Ending 9/30/2028** | | | | | | | | |
| 6 | Link to WP Plant Lead Sheet | | | | | | | | |
| 7 | | | | | | | | | |
| 8 | **Base Period data is historical Information from the Company's Books and Records.** | | | | | | | | |
| 9 | This schedule is sponsored by PNM Witness Gutierrez | | | | | | | | |
| 10 | **Location** | **Location Number Note 6** | **FERC** | **Loc/ FERC** | **FERC Description** | **Balance 11/1/25** | **Balance 12/1/25** | **Balance 1/1/26** | **Balance 2/1/26** |
| 142 | | | | | | | | | |
| 143 | | | | | | | | | |
| 144 | **Solar Production** | | | | | | | | |
| 237 | **All - Solar** | | | | | | | | |
| 238 | | | 338.01 | | Land & Land Rights | 11,040,948 | 11,040,948 | 11,040,948 | 11,040,948 |
| 239 | | | 338.02 | | Structures and Improvements | 268,299 | 268,299 | 268,299 | 268,299 |
| 240 | | | 338.04 | | Solar Panels | 277,545,592 | 277,545,592 | 277,545,592 | 277,545,592 |
| 241 | | | 338.05 | | Collector System | 8,264,812 | 8,264,812 | 8,264,812 | 8,264,812 |
| 242 | | | 338.07 | | Solar Inverters | - | - | - | - |
| 243 | | | 338.08 | | Other Accessory Electrical Equipment | 33,903,100 | 33,903,100 | 33,903,100 | 33,903,100 |
| 244 | | | 338.09 | | Computer Hardware | 51,760 | 51,760 | 51,760 | 51,760 |
| 245 | | | 338.10 | | Computer Software | - | - | - | - |
| 246 | | | 338.11 | | Communication Equipment | 637,577 | 637,577 | 637,577 | 637,577 |
| 247 | | | 338.12 | | Misc. Power Plant Equipment | 5,228,178 | 5,228,178 | 5,228,178 | 5,228,178 |
| 248 | **Total Solar Production Gross Plant** | | | | | 336,940,266 | 336,940,266 | 336,940,266 | 336,940,266 |
| 249 | | | | | | | | | |
| 250 | **Other Production** | | | | | | | | |
| 251 | | | | | | | | | |
| 252 | **Other Production - Gas:** | | | | | | | | |
| 339 | **All - Gas** | | 340 | | Land and Land Rights | 7,079,884 | 7,079,884 | 7,079,884 | 7,079,884 |
| 340 | | | 340.1 | | Land - Right of Way | 1,959,313 | 1,959,313 | 1,959,313 | 1,959,313 |
| 341 | | | 341 | | Structures and Improvements | 94,100,306 | 93,766,487 | 93,766,119 | 93,766,203 |
| 342 | | | 342 | | Fuel Holders, Producers, Accessories | 114,371,151 | 114,296,606 | 120,366,628 | 120,088,760 |
| 343 | | | 343 | | Prime Movers | - | - | - | - |
| 344 | | | 344 | | Generators | 262,145,840 | 261,577,291 | 261,345,943 | 261,470,273 |
| 345 | | | 345 | | Accessory Electric Equipment | 24,140,127 | 24,138,273 | 24,125,557 | 24,125,557 |
| 346 | | | 345.01 | | Computer Hardware | 53,885 | 53,885 | 53,885 | 53,885 |
| 347 | | | 345.02 | | Computer Software | 127,555 | 60,931 | 60,931 | 60,931 |
| 348 | | | 345.03 | | Communication Equipment | 38,862 | 38,862 | 38,862 | 38,862 |
| 349 | | | 346 | | Misc Power Plant Equipment | 45,899,927 | 45,583,223 | 46,120,940 | 45,526,142 |
| 350 | | | 347 | | Asset Retirement Costs - Other Production | 3,590,447 | 3,590,447 | 7,008,573 | 7,008,573 |
| 351 | **Total Other Production Plant - Gas** | | | | | 553,507,296 | 552,145,202 | 561,926,636 | 561,178,385 |
| 352 | | | | | | | | | |
| 353 | | | | | | | | | |
| 354 | **Total Other Production Gross Plant** | | | | | 553,507,296 | 552,145,202 | 561,926,636 | 561,178,385 |
| 355 | | | | | | | | | |
| 356 | **Total Gross Plant Production** | | | | | 2,176,234,719 | 2,174,614,126 | 2,195,751,015 | 2,195,841,774 |
| 357 | | | | | | | | | |
| 358 | | | | | | | | | |

| | A | B | C | D | E | J | K | L | M |
|---|---|---|---|---|---|---|---|---|---|
| 1 | **Public Service Company of New Mexico** | | | | | | | | |
| 2 | **Schedule B-3** | | | | | | | | |
| 3 | **Original Cost of Plant In Service by Monthly Balances** | | | | | | | | |
| 4 | **Base Period Ending 6/30/2026** | | | | | | | | |
| 5 | **Test Period Ending 9/30/2028** | | | | | | | | |
| 6 | Link to WP Plant Lead Sheet | | | | | | | | |
| 7 | | | | | | | | | |
| 8 | **Base Period data is historical Information from the Company's Books and Records.** | | | | | | | | |
| 9 | This schedule is sponsored by PNM Witness Gutierrez | | | | | | | | |
| 10 | **Location** | **Location Number Note 6** | **FERC** | **Loc/ FERC** | **FERC Description** | **Balance 11/1/25** | **Balance 12/1/25** | **Balance 1/1/26** | **Balance 2/1/26** |
| 359 | **Total Gross Energy Storage Plant** | | | | | | | | |
| 386 | **All - Energy Storage** | | 387.01 | 387.01 | Land & Land Rights | - | - | - | - |
| 387 | | | 387.02 | 387.02 | Structures & Improvements | 667,798 | 667,798 | 667,798 | 667,798 |
| 388 | | | 387.03 | 387.03 | Energy Storage Equipment | 19,475,685 | 19,475,685 | 19,475,685 | 19,592,692 |
| 389 | | | 387.05 | 387.05 | Collector System | 4,827,171 | 4,827,171 | 4,827,171 | 4,857,003 |
| 390 | | | 387.06 | 387.06 | Generator Step-Up Transformers (GSU) | 1,712,696 | 1,712,696 | 1,712,696 | 1,724,151 |
| 391 | | | 387.07 | 387.07 | Inverters | - | - | - | - |
| 392 | | | 387.08 | 387.08 | Computer Hardware | - | - | - | - |
| 393 | | | 387.09 | 387.09 | Computer Software | 605,006 | 605,006 | 605,006 | 605,006 |
| 394 | | | 387.10 | 387.10 | Communication Equipment | 545,603 | 545,603 | 545,603 | 545,603 |
| 395 | | | 387.11 | 387.11 | Misc. Energy Storage Equipment | 4,531,065 | 4,531,065 | 5,233,701 | 5,244,213 |
| 396 | | | 387.12 | 387.12 | Asset Retirement Costs for Energy Storage | - | - | - | - |
| 397 | **Total Gross Energy Storage Plant** | | | | | 32,365,024 | 32,365,024 | 33,067,660 | 33,236,465 |
| 398 | | | | | | | | | |
| 399 | | | | | | | | | |
| 400 | **Gross Plant Transmission Plant** | | | | | | | | |
| 401 | | | | | | | | | |
| 402 | | | | | | | | | |
| 453 | **All - Transmission** | | | | | | | | |
| 454 | | 650 | 350 | 650350 | Land and Land Rights | 80,576,025 | 80,576,025 | 80,576,075 | 80,576,025 |
| 455 | | 650 | 350.1 | 650350.1 | Land - Right of Way | 53,254,061 | 53,220,327 | 53,220,328 | 53,220,328 |
| 456 | | 650 | 351.01 | 650350.01 | Computer Hardware | 16,464,896 | 16,768,041 | 18,337,367 | 18,607,011 |
| 457 | | 650 | 351.02 | 650350.02 | Computer Software | 8,258,601 | 8,258,601 | 8,739,842 | 9,033,380 |
| 458 | | 650 | 351.03 | 650350.03 | Communication Equipment | 45,136,257 | 46,334,155 | 46,721,021 | 47,224,968 |
| 459 | | 650 | 352 | 650352 | Structures and Improvements | 236,343,827 | 236,507,547 | 245,719,402 | 246,057,840 |
| 460 | | 650 | 353 | 650353 | Station Equipment | 968,936,324 | 969,184,936 | 961,873,635 | 962,348,265 |
| 461 | | 650 | 353.1 | 650353.1 | Station Equipment - Step-up Xfmr and Aux | 12,193,036 | 12,193,036 | 12,193,036 | 12,193,036 |
| 462 | | 650 | 354 | 650354 | Towers and Fixtures | 65,460,010 | 65,461,824 | 65,398,758 | 65,398,758 |
| 463 | | 650 | 355 | 650355 | Poles and Fixtures | 554,939,635 | 554,718,217 | 556,376,354 | 556,346,856 |
| 464 | | 650 | 356 | 650356 | Overhead Conductors and Devices | 230,806,392 | 231,514,923 | 231,587,528 | 231,726,738 |
| 465 | | 650 | 357 | 650357 | Underground Conduit | 185,394 | 185,394 | 185,394 | 185,394 |
| 466 | | 650 | 359 | 650359 | Roads and Trails | 9,800,590 | 9,800,590 | 9,800,590 | 9,800,590 |
| 467 | **Total Gross Plant Transmission Plant** | | | | | 2,282,355,050 | 2,284,723,618 | 2,290,729,330 | 2,292,719,189 |
| 468 | | | | | | | | | |

| | A | B | C | D | E | J | K | L | M |
|---|---|---|---|---|---|---|---|---|---|
| 1 | **Public Service Company of New Mexico** | | | | | | | | |
| 2 | **Schedule B-3** | | | | | | | | |
| 3 | **Original Cost of Plant In Service by Monthly Balances** | | | | | | | | |
| 4 | **Base Period Ending 6/30/2026** | | | | | | | | |
| 5 | **Test Period Ending 9/30/2028** | | | | | | | | |
| 6 | Link to WP Plant Lead Sheet | | | | | | | | |
| 7 | | | | | | | | | |
| 8 | **Base Period data is historical Information from the Company's Books and Records.** | | | | | | | | |
| 9 | This schedule is sponsored by PNM Witness Gutierrez | | | | | | | | |
| 10 | **Location** | **Location Number Note 6** | **FERC** | **Loc/ FERC** | **FERC Description** | **Balance 11/1/25** | **Balance 12/1/25** | **Balance 1/1/26** | **Balance 2/1/26** |
| 469 | | | | | | | | | |
| 470 | | | | | | | | | |
| 471 | **Gross Plant Distribution Plant** | | | | | | | | |
| 665 | **All - Distribution** | | | | | | | | |
| 666 | | | 360 | | Land and Land Rights | 10,357,220 | 11,788,694 | 9,746,479 | 9,746,479 |
| 667 | | | 360.1 | | Land - Right of Way | 2,121,278 | 2,121,278 | 2,121,278 | 2,121,278 |
| 668 | | | 361 | | Structures and Improvements | 44,860,693 | 44,855,465 | 73,851,842 | 74,137,531 |
| 669 | | | 362 | | Station Equipment | 323,608,060 | 323,665,321 | 319,274,515 | 319,337,735 |
| 670 | | | 363.01 | | Computer Hardware | 3,515,189 | 3,664,271 | 6,394,221 | 6,418,457 |
| 671 | | | 363.02 | | Computer Software | 32,733,382 | 33,773,241 | 50,592,032 | 52,446,455 |
| 672 | | | 363.03 | | Communication Equipment | 15,234,305 | 14,621,682 | 18,400,218 | 18,554,006 |
| 673 | | | 364 | | Poles, Towers and Fixtures | 420,991,925 | 424,460,172 | 440,042,443 | 443,928,114 |
| 674 | | | 365 | | Overhead Conductors and Devices | 281,403,243 | 284,859,227 | 290,182,587 | 291,335,640 |
| 675 | | | 366 | | Underground Conduit | 185,084,869 | 185,873,758 | 192,019,078 | 193,080,162 |
| 676 | | | 367 | | Underground Conductors and Devices | 442,878,828 | 446,445,456 | 463,648,492 | 465,043,351 |
| 677 | | | 368 | | Line Transformers | 284,234,922 | 285,657,772 | 285,896,460 | 287,333,624 |
| 678 | | | 369 | | Services | 101,188,717 | 101,219,165 | 101,794,650 | 101,857,347 |
| 679 | | | 369.1 | | Services - Underground | 171,357,210 | 171,327,086 | 174,620,108 | 175,536,647 |
| 680 | | | 370 | | Meters Net Plant - PNM | 66,480,255 | 66,614,443 | 66,513,407 | 66,811,205 |
| 681 | | | 370.4 | | Meters Net Plant - Grid Mod | - | - | - | - |
| 682 | | | 371 | | Installations on Customers' Premises | 9,151,530 | 9,151,530 | 9,151,530 | 9,151,530 |
| 683 | | | 371.1 | | Leased Flood Lighting | 307,353 | 307,353 | 307,353 | 307,353 |
| 684 | | | 373 | | Street Lighting and Signal Systems | 28,997,204 | 29,010,997 | 29,957,041 | 30,501,967 |
| 685 | | | 374 | | Asset Retirement Costs - Distribution | 14,202 | 14,202 | - | - |
| 686 | **Total Gross Plant Distribution Plant** | | | | | 2,424,520,385 | 2,439,431,112 | 2,534,513,733 | 2,547,648,881 |
| 687 | | | | | | | | | |

| | A | B | C | D | E | J | K | L | M |
|---|---|---|---|---|---|---|---|---|---|
| 1 | **Public Service Company of New Mexico** | | | | | | | | |
| 2 | **Schedule B-3** | | | | | | | | |
| 3 | **Original Cost of Plant In Service by Monthly Balances** | | | | | | | | |
| 4 | **Base Period Ending 6/30/2026** | | | | | | | | |
| 5 | **Test Period Ending 9/30/2028** | | | | | | | | |
| 6 | Link to WP Plant Lead Sheet | | | | | | | | |
| 7 | | | | | | | | | |
| 8 | **Base Period data is historical Information from the Company's Books and Records.** | | | | | | | | |
| 9 | This schedule is sponsored by PNM Witness Gutierrez | | | | | | | | |
| 10 | **Location** | **Location Number Note 6** | **FERC** | **Loc/ FERC** | **FERC Description** | **Balance 11/1/25** | **Balance 12/1/25** | **Balance 1/1/26** | **Balance 2/1/26** |
| 688 | | | | | | | | | |
| 689 | **Gross Plant G&I Plant (303,389-399)** | | | | | | | | |
| 719 | **Total General & Intangible Plant** | | | | | | | | |
| 720 | | | 303 | 303 | Miscellaneous Intangible Plant | - | - | - | - |
| 721 | | | 389 | 389 | Land and Land Rights | 1,937,568 | 1,937,568 | 1,937,568 | 1,937,568 |
| 722 | | | 390 | 390 | Structures and Improvements | 73,322,000 | 73,673,042 | 74,237,927 | 74,343,278 |
| 723 | | | 390.1 | 390.1 | Bulk Power Office Building Remodeling | 5,904,067 | 5,904,067 | 5,904,067 | 5,904,067 |
| 724 | | | 390.2 | 390.2 | Bulk Power Office Building | 5,965,530 | 5,965,530 | 5,965,530 | 5,965,530 |
| 725 | | | 391 | 391 | Office Furniture and Equipment | 5,061,360 | 5,061,390 | 5,173,878 | 5,195,015 |
| 726 | | | 391.1 | 391.1 | Office Furniture and Equipment - PC System | - | - | - | - |
| 727 | | | 391.2 | 391.2 | Office Furniture and Equipment - PC's | - | - | - | - |
| 728 | | | 391.3 | 391.3 | Computer Hardware | 319 | - | - | - |
| 729 | | | 391.5 | 391.5 | Computer Hardware - Solar | - | - | - | - |
| 730 | | | 391.7 | 391.7 | Computer Hardware | - | - | - | - |
| 731 | | | 392 | 392 | Transportation Equipment - Light | 4,234,699 | 4,234,699 | 4,186,341 | 4,186,341 |
| 732 | | | 392.1 | 392.1 | Transportation Equipment - Heavy | 5,035,647 | 5,035,647 | 5,035,647 | 5,035,647 |
| 733 | | | 392.2 | 392.2 | Transportation Equipment - Trailers | 8,522,453 | 8,522,596 | 8,516,240 | 8,516,240 |
| 734 | | | 392.4 | 392.4 | Transportation Equipment - Leaseback | - | - | - | - |
| 735 | | | 393 | 393 | Stores Equipment | 97,939 | 97,939 | 97,939 | 97,939 |
| 736 | | | 394 | 394 | Tools, Shop & Garage Equipment | 20,031,362 | 20,162,983 | 20,315,387 | 20,361,512 |
| 737 | | | 395 | 395 | Laboratory Equipment | 206,265 | 206,265 | 206,265 | 206,265 |
| 738 | | | 396 | 396 | Power Operated Equipment | 7,321,724 | 7,321,724 | 7,321,724 | 7,368,699 |
| 739 | | | 397.01 | 397.01 | Computer Hardware | 1,879,059 | 2,021,047 | 2,376,501 | 2,386,476 |
| 740 | | | 397.02 | 397.02 | Computer Software | 26,954,703 | 27,073,235 | 27,571,908 | 27,576,816 |
| 741 | | | 397.03 | 397.03 | Communication Equipment | 373,850 | - | - | - |
| 742 | | | 398 | 398 | Miscellaneous Equipment | 1,778,437 | 1,778,437 | 1,778,437 | 1,778,437 |
| 743 | | | 399.1 | 399.1 | ARO General Plant-1 | 19,473 | 19,473 | 19,473 | 19,473 |
| 744 | **Total Gross Plant G&I Plant - PNM** | | | | | 168,646,455 | 169,015,643 | 170,644,831 | 170,879,303 |
| 745 | | | | | | | | | |
| 746 | **Total Electric Plant In Service** | | 101/106 | | | 7,084,121,632 | 7,100,149,522 | 7,224,706,568 | 7,240,325,612 |
| 747 | | | | | | | | | |
| 748 | **Electric Plant Purchased** | | 102 | | | | | | |
| 749 | | | | | | | | | |
| 750 | **Electric Plant Acquisition Adjustment** | | | | Acq. Adj. - Palo Verde Unit 1&2 (Drexel) | | | | |
| 751 | | | | | Acq. Adj. - Palo Verde Unit 2 (First Chicago) | 16,918,423 | 16,849,085 | 16,779,747 | 16,710,410 |
| 752 | | | | | Acq. Adj. - (EIP) | 97,661 | 48,830 | - | - |
| 753 | **Electric Plant Acquisition Adjustment** | | 114 | | | 17,016,084 | 16,897,915 | 16,779,747 | 16,710,410 |
| 754 | | | | | | | | | |
| 755 | **Total Electric Plant** | | | | | 7,101,137,716 | 7,117,047,437 | 7,241,486,315 | 7,257,036,022 |
| 756 | | | | | | | | | |
| 757 | | | | | | | | | |

| | A | B | C | D | E | J | K | L | M |
|---|---|---|---|---|---|---|---|---|---|
| 1 | **Public Service Company of New Mexico** | | | | | | | | |
| 2 | **Schedule B-3** | | | | | | | | |
| 3 | **Original Cost of Plant In Service by Monthly Balances** | | | | | | | | |
| 4 | **Base Period Ending 6/30/2026** | | | | | | | | |
| 5 | **Test Period Ending 9/30/2028** | | | | | | | | |
| 6 | Link to WP Plant Lead Sheet | | | | | | | | |
| 7 | | | | | | | | | |
| 8 | **Base Period data is historical Information from the Company's Books and Records.** | | | | | | | | |
| 9 | This schedule is sponsored by PNM Witness Gutierrez | | | | | | | | |
| 10 | **Location** | **Location Number Note 6** | **FERC** | **Loc/ FERC** | **FERC Description** | **Balance 11/1/25** | **Balance 12/1/25** | **Balance 1/1/26** | **Balance 2/1/26** |
| 758 | **Corporate Unallocated** | 900 | 303 | 900303 | Miscellaneous Intangible Plant | - | - | - | - |
| 759 | | 900 | 389 | 900389 | Land and Land Rights | 5,133,327 | 5,133,327 | 5,133,327 | 5,133,327 |
| 760 | | 900 | 390 | 900390 | Structures and Improvements | 64,327,949 | 65,287,626 | 67,887,338 | 69,994,901 |
| 761 | | 900 | 390.1 | 900390.1 | Bulk Power Office Building Remodeling | - | - | - | - |
| 762 | | 900 | 390.2 | 900390.2 | Bulk Power Office Building | - | - | - | - |
| 763 | | 900 | 391 | 900391 | Office Furniture and Equipment | 893,940 | 893,940 | 893,940 | 893,940 |
| 764 | | 900 | 391.1 | 900391.1 | Office Furniture and Equipment - PC System | - | - | - | - |
| 765 | | 900 | 391.2 | 900391.2 | Office Furniture and Equipment - PC's | - | - | - | - |
| 766 | | 900 | 391.3 | 900391.3 | Computer Hardware | (653) | - | - | - |
| 767 | | 900 | 391.5 | 900391.5 | Computer Hardware - Solar | - | - | - | - |
| 768 | | 900 | 391.7 | 900391.7 | Computer Hardware | - | - | - | - |
| 769 | | 900 | 392 | 900392 | Transportation Equipment - Light | 318,848 | 318,865 | 354,119 | 352,267 |
| 770 | | 900 | 392.1 | 900392.1 | Transportation Equipment - Heavy | 52,320 | 52,320 | 52,320 | 52,320 |
| 771 | | 900 | 392.2 | 900392.2 | Transportation Equipment - Trailers | 10,272 | 10,272 | 10,272 | 10,272 |
| 772 | | 900 | 392.4 | 900392.4 | Transportation Equipment - Leaseback | - | - | - | - |
| 773 | | 900 | 393 | 900393 | Stores Equipment | - | - | - | - |
| 774 | | 900 | 394 | 900394 | Tools, Shop & Garage Equipment | 582,133 | 582,133 | 584,525 | 584,525 |
| 775 | | 900 | 395 | 900395 | Laboratory Equipment | - | - | - | - |
| 776 | | 900 | 396 | 900396 | Power Operated Equipment | 26,134 | 26,134 | 26,134 | 26,134 |
| 777 | | 900 | 397 | 900397 | Communication Equipment | - | - | - | - |
| 778 | | 900 | 397.01 | 900397.01 | Computer Hardware | 45,996,135 | 45,139,666 | 46,056,421 | 47,141,253 |
| 779 | | 900 | 397.02 | 900397.02 | Computer Software | 185,250,696 | 186,119,100 | 193,680,086 | 195,443,984 |
| 780 | | 900 | 397.03 | 900397.03 | Communication Equipment | 5,069,211 | 5,097,570 | 5,097,570 | 5,097,570 |
| 781 | | 900 | 397.2 | 900397.2 | Communication Equipment | - | - | - | - |
| 782 | | 900 | 397.3 | 900397.3 | Communication Equipment | - | - | - | - |
| 783 | | 900 | 398 | 900398 | Miscellaneous Equipment | - | - | - | - |
| 784 | | 900 | 399.1 | 900399.1 | ARO General Plant-1 | - | - | - | - |
| 785 | | | | | | | | | |
| 786 | **Total Corporate Unallocated** | | | | | 307,660,314 | 308,660,953 | 319,776,054 | 324,730,495 |
| 787 | | | | | | | | | |
| 788 | **al Electric Plant In Service - with Corporate** | | 101/106 | | | 7,391,781,946 | 7,408,810,475 | 7,544,482,622 | 7,565,056,107 |
| 790 | **Electric Plant Purchased - with Corporate** | | 102 | | | | | | |
| 792 | **Electric Plant Acq. Adj. - with Corporate** | | 114 | | | 17,016,084 | 16,897,915 | 16,779,747 | 16,710,410 |
| 793 | | | | | | | | | |
| 794 | **Total Electric Plant - with Corporate** | | | | | 7,408,798,030 | 7,425,708,390 | 7,561,262,369 | 7,581,766,516 |

| | A | B | C | D | E | N | O | P |
|---|---|---|---|---|---|---|---|---|
| 1 | **Public Service Company of New Mexico** | | | | | | | |
| 2 | **Schedule B-3** | | | | | | | |
| 3 | **Original Cost of Plant In Service by Monthly Balances** | | | | | | | |
| 4 | **Base Period Ending 6/30/2026** | | | | | | | |
| 5 | **Test Period Ending 9/30/2028** | | | | | | | |
| 6 | Link to WP Plant Lead Sheet | | | | | | | |
| 7 | | | | | | | | |
| 8 | **Base Period data is historical Information from the Company's Books and Records.** | | | | | | | |
| 9 | This schedule is sponsored by PNM Witness Gutierrez | | | | | | | |
| 10 | **Location** | **Location Number Note 6** | **FERC** | **Loc/ FERC** | **FERC Description** | **Balance 3/1/26** | **Balance 4/1/26** | **Balance 5/1/26** |
| 11 | | | | | | | | |
| 12 | **Production Plant** | | | | | | | |
| 13 | **Steam Production** | | | | | | | |
| 56 | **All - Steam** | | | | | | | |
| 57 | | | 310 | | Land and Land Rights | 618,487 | 618,487 | 618,487 |
| 58 | | | 310.1 | | Land Right of Way | 25,958 | 25,958 | 25,958 |
| 59 | | | 311 | | Structures & Improvements | 34,074,197 | 34,053,982 | 34,047,775 |
| 60 | | | 312 | | Boiler Plant Equipment | 311,181,498 | 311,165,422 | 311,122,696 |
| 61 | | | 314 | | Turbogenerator Units | 76,792,117 | 76,501,145 | 76,305,456 |
| 62 | | | 315 | | Accessory Electric Equipment | 25,551,102 | 25,551,038 | 25,553,207 |
| 63 | | | 315.01 | | Computer Hardware | - | - | - |
| 64 | | | 315.02 | | Computer Software | 1,362,246 | 1,362,246 | 1,362,246 |
| 65 | | | 315.03 | | Communication Equipment | 334,000 | 334,053 | 334,053 |
| 66 | | | 316 | | Misc Power Plant Equipment | 35,449,167 | 35,418,156 | 35,600,801 |
| 67 | | | 317 | | Asset Retirement Costs - Steam | 10,249,476 | 10,249,476 | 10,249,476 |
| 68 | **Total Steam Production Gross Plant** | | | | | 495,638,249 | 495,279,964 | 495,220,154 |
| 69 | | | | | | | | |
| 70 | | | | | | | | |
| 71 | **Nuclear Production** | | | | | | | |
| 129 | **All - Nuclear** | | | | | | | |
| 130 | | | 320 | | Land and Land Rights | 439,822 | 439,822 | 439,822 |
| 131 | | | 320.1 | | Land - Right of Way | 44,622 | 44,622 | 44,622 |
| 132 | | | 321 | | Structures and Improvements | 206,197,870 | 206,284,789 | 206,419,045 |
| 133 | | | 322 | | Reactor Plant Equipment | 336,014,299 | 335,947,173 | 335,835,102 |
| 134 | | | 323 | | Turbogenerator Units | 115,066,837 | 115,041,823 | 115,003,876 |
| 135 | | | 324 | | Accessory Electric Equipment | 58,232,941 | 58,234,360 | 60,862,534 |
| 136 | | | 324.01 | | Computer Hardware | - | - | - |
| 137 | | | 324.02 | | Computer Software | 12,665,436 | 12,814,010 | 12,968,944 |
| 138 | | | 324.03 | | Communication Equipment | 408,257 | 408,257 | 408,257 |
| 139 | | | 325 | | Misc Power Plant Equipment | 70,986,238 | 71,078,620 | 71,066,695 |
| 140 | | | 326 | | Asset Retirement Costs Nuclear Prod Plant | 12,831,931 | 12,831,931 | 12,831,931 |
| 141 | **Total Nuclear Production Gross Plant** | | | | | 812,888,254 | 813,125,408 | 815,880,828 |

| | A | B | C | D | E | N | O | P |
|---|---|---|---|---|---|---|---|---|
| 1 | **Public Service Company of New Mexico** | | | | | | | |
| 2 | **Schedule B-3** | | | | | | | |
| 3 | **Original Cost of Plant In Service by Monthly Balances** | | | | | | | |
| 4 | **Base Period Ending 6/30/2026** | | | | | | | |
| 5 | **Test Period Ending 9/30/2028** | | | | | | | |
| 6 | Link to WP Plant Lead Sheet | | | | | | | |
| 7 | | | | | | | | |
| 8 | **Base Period data is historical Information from the Company's Books and Records.** | | | | | | | |
| 9 | This schedule is sponsored by PNM Witness Gutierrez | | | | | | | |
| 10 | **Location** | **Location Number Note 6** | **FERC** | **Loc/ FERC** | **FERC Description** | **Balance 3/1/26** | **Balance 4/1/26** | **Balance 5/1/26** |
| 142 | | | | | | | | |
| 143 | | | | | | | | |
| 144 | **Solar Production** | | | | | | | |
| 237 | **All - Solar** | | | | | | | |
| 238 | | | 338.01 | | Land & Land Rights | 11,040,948 | 11,040,948 | 11,040,948 |
| 239 | | | 338.02 | | Structures and Improvements | 268,299 | 268,299 | 268,299 |
| 240 | | | 338.04 | | Solar Panels | 277,545,592 | 277,545,592 | 277,545,592 |
| 241 | | | 338.05 | | Collector System | 8,264,812 | 8,264,812 | 8,264,812 |
| 242 | | | 338.07 | | Solar Inverters | - | - | - |
| 243 | | | 338.08 | | Other Accessory Electrical Equipment | 33,903,100 | 33,903,100 | 33,903,100 |
| 244 | | | 338.09 | | Computer Hardware | 51,760 | 51,760 | 51,760 |
| 245 | | | 338.10 | | Computer Software | - | - | - |
| 246 | | | 338.11 | | Communication Equipment | 637,577 | 637,577 | 637,577 |
| 247 | | | 338.12 | | Misc. Power Plant Equipment | 5,228,178 | 5,228,178 | 5,228,178 |
| 248 | **Total Solar Production Gross Plant** | | | | | 336,940,266 | 336,940,266 | 336,940,266 |
| 249 | | | | | | | | |
| 250 | **Other Production** | | | | | | | |
| 251 | | | | | | | | |
| 252 | **Other Production - Gas:** | | | | | | | |
| 339 | **All - Gas** | | 340 | | Land and Land Rights | 7,079,884 | 7,079,884 | 7,079,884 |
| 340 | | | 340.1 | | Land - Right of Way | 1,959,313 | 1,959,313 | 1,959,313 |
| 341 | | | 341 | | Structures and Improvements | 93,766,203 | 93,748,302 | 93,829,515 |
| 342 | | | 342 | | Fuel Holders, Producers, Accessories | 120,178,355 | 120,054,105 | 120,057,577 |
| 343 | | | 343 | | Prime Movers | - | - | - |
| 344 | | | 344 | | Generators | 261,112,585 | 261,057,224 | 259,362,359 |
| 345 | | | 345 | | Accessory Electric Equipment | 24,125,557 | 24,125,557 | 24,125,557 |
| 346 | | | 345.01 | | Computer Hardware | 53,885 | 53,885 | 53,885 |
| 347 | | | 345.02 | | Computer Software | 60,931 | 60,931 | 60,931 |
| 348 | | | 345.03 | | Communication Equipment | 38,862 | 38,862 | 38,862 |
| 349 | | | 346 | | Misc Power Plant Equipment | 45,519,713 | 45,503,283 | 46,118,681 |
| 350 | | | 347 | | Asset Retirement Costs - Other Production | 7,008,573 | 7,008,573 | 7,008,573 |
| 351 | **Total Other Production Plant - Gas** | | | | | 560,903,863 | 560,689,920 | 559,695,138 |
| 352 | | | | | | | | |
| 353 | | | | | | | | |
| 354 | **Total Other Production Gross Plant** | | | | | 560,903,863 | 560,689,920 | 559,695,138 |
| 355 | | | | | | | | |
| 356 | **Total Gross Plant Production** | | | | | 2,206,370,632 | 2,206,035,558 | 2,207,736,386 |
| 357 | | | | | | | | |
| 358 | | | | | | | | |

| | A | B | C | D | E | N | O | P |
|---|---|---|---|---|---|---|---|---|
| 1 | **Public Service Company of New Mexico** | | | | | | | |
| 2 | **Schedule B-3** | | | | | | | |
| 3 | **Original Cost of Plant In Service by Monthly Balances** | | | | | | | |
| 4 | **Base Period Ending 6/30/2026** | | | | | | | |
| 5 | **Test Period Ending 9/30/2028** | | | | | | | |
| 6 | Link to WP Plant Lead Sheet | | | | | | | |
| 7 | | | | | | | | |
| 8 | **Base Period data is historical Information from the Company's Books and Records.** | | | | | | | |
| 9 | This schedule is sponsored by PNM Witness Gutierrez | | | | | | | |
| 10 | **Location** | **Location Number Note 6** | **FERC** | **Loc/ FERC** | **FERC Description** | **Balance 3/1/26** | **Balance 4/1/26** | **Balance 5/1/26** |
| 359 | **Total Gross Energy Storage Plant** | | | | | | | |
| 386 | **All - Energy Storage** | | 387.01 | 387.01 | Land & Land Rights | - | - | - |
| 387 | | | 387.02 | 387.02 | Structures & Improvements | 667,798 | 667,798 | 667,798 |
| 388 | | | 387.03 | 387.03 | Energy Storage Equipment | 19,592,692 | 19,592,692 | 19,592,692 |
| 389 | | | 387.05 | 387.05 | Collector System | 4,857,003 | 4,857,003 | 4,857,003 |
| 390 | | | 387.06 | 387.06 | Generator Step-Up Transformers (GSU) | 1,724,151 | 1,724,151 | 1,724,151 |
| 391 | | | 387.07 | 387.07 | Inverters | - | - | - |
| 392 | | | 387.08 | 387.08 | Computer Hardware | - | - | - |
| 393 | | | 387.09 | 387.09 | Computer Software | 605,006 | 605,006 | 605,006 |
| 394 | | | 387.10 | 387.10 | Communication Equipment | 545,603 | 545,603 | 545,603 |
| 395 | | | 387.11 | 387.11 | Misc. Energy Storage Equipment | 5,244,213 | 5,244,213 | 5,244,213 |
| 396 | | | 387.12 | 387.12 | Asset Retirement Costs for Energy Storage | - | - | - |
| 397 | **Total Gross Energy Storage Plant** | | | | | 33,236,465 | 33,236,465 | 33,236,465 |
| 398 | | | | | | | | |
| 399 | | | | | | | | |
| 400 | **Gross Plant Transmission Plant** | | | | | | | |
| 401 | | | | | | | | |
| 402 | | | | | | | | |
| 453 | **All - Transmission** | | | | | | | |
| 454 | | 650 | 350 | 650350 | Land and Land Rights | 80,576,030 | 80,576,030 | 80,549,192 |
| 455 | | 650 | 350.1 | 650350.1 | Land - Right of Way | 53,220,328 | 53,220,328 | 53,099,287 |
| 456 | | 650 | 351.01 | 650350.01 | Computer Hardware | 18,811,842 | 18,899,268 | 18,937,308 |
| 457 | | 650 | 351.02 | 650350.02 | Computer Software | 9,039,545 | 9,137,839 | 9,138,193 |
| 458 | | 650 | 351.03 | 650350.03 | Communication Equipment | 47,330,026 | 47,506,395 | 47,632,885 |
| 459 | | 650 | 352 | 650352 | Structures and Improvements | 246,656,703 | 246,950,400 | 247,667,946 |
| 460 | | 650 | 353 | 650353 | Station Equipment | 962,780,368 | 962,214,529 | 961,194,212 |
| 461 | | 650 | 353.1 | 650353.1 | Station Equipment - Step-up Xfmr and Aux | 12,193,036 | 12,193,036 | 12,193,036 |
| 462 | | 650 | 354 | 650354 | Towers and Fixtures | 65,398,680 | 65,398,680 | 65,398,680 |
| 463 | | 650 | 355 | 650355 | Poles and Fixtures | 556,337,560 | 556,370,453 | 558,243,517 |
| 464 | | 650 | 356 | 650356 | Overhead Conductors and Devices | 231,783,427 | 231,784,989 | 232,094,572 |
| 465 | | 650 | 357 | 650357 | Underground Conduit | 185,394 | 185,394 | 185,394 |
| 466 | | 650 | 359 | 650359 | Roads and Trails | 9,800,590 | 9,800,590 | 9,800,590 |
| 467 | **Total Gross Plant Transmission Plant** | | | | | 2,294,113,530 | 2,294,237,932 | 2,296,134,812 |
| 468 | | | | | | | | |

| | A | B | C | D | E | N | O | P |
|---|---|---|---|---|---|---|---|---|
| 1 | **Public Service Company of New Mexico** | | | | | | | |
| 2 | **Schedule B-3** | | | | | | | |
| 3 | **Original Cost of Plant In Service by Monthly Balances** | | | | | | | |
| 4 | **Base Period Ending 6/30/2026** | | | | | | | |
| 5 | **Test Period Ending 9/30/2028** | | | | | | | |
| 6 | Link to WP Plant Lead Sheet | | | | | | | |
| 7 | | | | | | | | |
| 8 | **Base Period data is historical Information from the Company's Books and Records.** | | | | | | | |
| 9 | This schedule is sponsored by PNM Witness Gutierrez | | | | | | | |
| 10 | **Location** | **Location Number Note 6** | **FERC** | **Loc/ FERC** | **FERC Description** | **Balance 3/1/26** | **Balance 4/1/26** | **Balance 5/1/26** |
| 469 | | | | | | | | |
| 470 | | | | | | | | |
| 471 | **Gross Plant Distribution Plant** | | | | | | | |
| 665 | **All - Distribution** | | | | | | | |
| 666 | | | 360 | | Land and Land Rights | 9,746,479 | 9,746,479 | 9,747,112 |
| 667 | | | 360.1 | | Land - Right of Way | 2,121,278 | 2,121,278 | 2,121,278 |
| 668 | | | 361 | | Structures and Improvements | 72,356,243 | 72,478,706 | 72,974,358 |
| 669 | | | 362 | | Station Equipment | 319,341,868 | 319,840,756 | 327,264,183 |
| 670 | | | 363.01 | | Computer Hardware | 6,634,648 | 7,341,373 | 7,682,578 |
| 671 | | | 363.02 | | Computer Software | 52,329,323 | 51,569,635 | 52,147,708 |
| 672 | | | 363.03 | | Communication Equipment | 18,676,857 | 18,748,663 | 18,540,559 |
| 673 | | | 364 | | Poles, Towers and Fixtures | 448,701,335 | 455,450,754 | 459,530,330 |
| 674 | | | 365 | | Overhead Conductors and Devices | 292,569,413 | 293,856,607 | 295,662,954 |
| 675 | | | 366 | | Underground Conduit | 194,516,708 | 195,348,572 | 195,584,906 |
| 676 | | | 367 | | Underground Conductors and Devices | 469,257,889 | 471,104,964 | 471,180,078 |
| 677 | | | 368 | | Line Transformers | 288,475,589 | 289,746,346 | 290,555,721 |
| 678 | | | 369 | | Services | 101,856,357 | 101,856,357 | 102,969,262 |
| 679 | | | 369.1 | | Services - Underground | 175,573,333 | 175,574,048 | 178,932,129 |
| 680 | | | 370 | | Meters Net Plant - PNM | 67,041,324 | 67,057,162 | 67,084,112 |
| 681 | | | 370.4 | | Meters Net Plant - Grid Mod | - | 210,668 | 210,668 |
| 682 | | | 371 | | Installations on Customers' Premises | 9,151,530 | 9,151,530 | 9,151,530 |
| 683 | | | 371.1 | | Leased Flood Lighting | 307,353 | 307,353 | 307,353 |
| 684 | | | 373 | | Street Lighting and Signal Systems | 30,888,368 | 30,988,264 | 31,147,021 |
| 685 | | | 374 | | Asset Retirement Costs - Distribution | - | - | - |
| 686 | **Total Gross Plant Distribution Plant** | | | | | 2,559,545,894 | 2,572,499,514 | 2,592,793,839 |
| 687 | | | | | | | | |

| | A | B | C | D | E | N | O | P |
|---|---|---|---|---|---|---|---|---|
| 1 | **Public Service Company of New Mexico** | | | | | | | |
| 2 | **Schedule B-3** | | | | | | | |
| 3 | **Original Cost of Plant In Service by Monthly Balances** | | | | | | | |
| 4 | **Base Period Ending 6/30/2026** | | | | | | | |
| 5 | **Test Period Ending 9/30/2028** | | | | | | | |
| 6 | Link to WP Plant Lead Sheet | | | | | | | |
| 7 | | | | | | | | |
| 8 | **Base Period data is historical Information from the Company's Books and Records.** | | | | | | | |
| 9 | This schedule is sponsored by PNM Witness Gutierrez | | | | | | | |
| 10 | **Location** | **Location Number Note 6** | **FERC** | **Loc/ FERC** | **FERC Description** | **Balance 3/1/26** | **Balance 4/1/26** | **Balance 5/1/26** |
| 688 | | | | | | | | |
| 689 | **Gross Plant G&I Plant (303,389-399)** | | | | | | | |
| 719 | **Total General & Intangible Plant** | | | | | | | |
| 720 | | | 303 | 303 | Miscellaneous Intangible Plant | - | - | - |
| 721 | | | 389 | 389 | Land and Land Rights | 1,937,568 | 1,937,568 | 1,937,568 |
| 722 | | | 390 | 390 | Structures and Improvements | 74,375,363 | 74,136,906 | 74,136,906 |
| 723 | | | 390.1 | 390.1 | Bulk Power Office Building Remodeling | 5,904,067 | 5,904,067 | 5,904,067 |
| 724 | | | 390.2 | 390.2 | Bulk Power Office Building | 5,965,530 | 5,965,530 | 5,965,530 |
| 725 | | | 391 | 391 | Office Furniture and Equipment | 5,195,086 | 5,055,574 | 5,055,574 |
| 726 | | | 391.1 | 391.1 | Office Furniture and Equipment - PC System | - | - | - |
| 727 | | | 391.2 | 391.2 | Office Furniture and Equipment - PC's | - | - | - |
| 728 | | | 391.3 | 391.3 | Computer Hardware | - | - | - |
| 729 | | | 391.5 | 391.5 | Computer Hardware - Solar | - | - | - |
| 730 | | | 391.7 | 391.7 | Computer Hardware | - | - | - |
| 731 | | | 392 | 392 | Transportation Equipment - Light | 4,420,028 | 4,441,439 | 4,418,321 |
| 732 | | | 392.1 | 392.1 | Transportation Equipment - Heavy | 5,035,647 | 5,035,647 | 5,035,647 |
| 733 | | | 392.2 | 392.2 | Transportation Equipment - Trailers | 8,516,240 | 8,516,240 | 8,516,240 |
| 734 | | | 392.4 | 392.4 | Transportation Equipment - Leaseback | - | - | - |
| 735 | | | 393 | 393 | Stores Equipment | 97,939 | 97,939 | 97,939 |
| 736 | | | 394 | 394 | Tools, Shop & Garage Equipment | 20,426,237 | 20,445,616 | 20,634,179 |
| 737 | | | 395 | 395 | Laboratory Equipment | 206,265 | 206,265 | 206,265 |
| 738 | | | 396 | 396 | Power Operated Equipment | 7,409,694 | 7,409,871 | 7,409,871 |
| 739 | | | 397.01 | 397.01 | Computer Hardware | 2,387,088 | 2,386,424 | 2,386,424 |
| 740 | | | 397.02 | 397.02 | Computer Software | 31,682,570 | 35,240,748 | 35,284,137 |
| 741 | | | 397.03 | 397.03 | Communication Equipment | - | - | 40,464 |
| 742 | | | 398 | 398 | Miscellaneous Equipment | 1,778,437 | 1,778,437 | 1,768,669 |
| 743 | | | 399.1 | 399.1 | ARO General Plant-1 | 19,473 | 19,473 | 19,473 |
| 744 | **Total Gross Plant G&I Plant - PNM** | | | | | 175,357,232 | 178,577,744 | 178,817,274 |
| 745 | | | | | | | | |
| 746 | **Total Electric Plant In Service** | | 101/106 | | | 7,268,623,753 | 7,284,587,212 | 7,308,718,776 |
| 747 | | | | | | | | |
| 748 | **Electric Plant Purchased** | | 102 | | | | | |
| 749 | | | | | | | | |
| 750 | **Electric Plant Acquisition Adjustment** | | | | Acq. Adj. - Palo Verde Unit 1&2 (Drexel) | | | |
| 751 | | | | | Acq. Adj. - Palo Verde Unit 2 (First Chicago) | 16,641,072 | 16,571,734 | 16,502,396 |
| 752 | | | | | Acq. Adj. - (EIP) | - | - | - |
| 753 | **Electric Plant Acquisition Adjustment** | | 114 | | | 16,641,072 | 16,571,734 | 16,502,396 |
| 754 | | | | | | | | |
| 755 | **Total Electric Plant** | | | | | 7,285,264,824 | 7,301,158,946 | 7,325,221,172 |
| 756 | | | | | | | | |
| 757 | | | | | | | | |

| | A | B | C | D | E | N | O | P |
|---|---|---|---|---|---|---|---|---|
| 1 | **Public Service Company of New Mexico** | | | | | | | |
| 2 | **Schedule B-3** | | | | | | | |
| 3 | **Original Cost of Plant In Service by Monthly Balances** | | | | | | | |
| 4 | **Base Period Ending 6/30/2026** | | | | | | | |
| 5 | **Test Period Ending 9/30/2028** | | | | | | | |
| 6 | Link to WP Plant Lead Sheet | | | | | | | |
| 7 | | | | | | | | |
| 8 | **Base Period data is historical Information from the Company's Books and Records.** | | | | | | | |
| 9 | This schedule is sponsored by PNM Witness Gutierrez | | | | | | | |
| 10 | **Location** | **Location Number Note 6** | **FERC** | **Loc/ FERC** | **FERC Description** | **Balance 3/1/26** | **Balance 4/1/26** | **Balance 5/1/26** |
| 758 | **Corporate Unallocated** | 900 | 303 | 900303 | Miscellaneous Intangible Plant | - | - | - |
| 759 | | 900 | 389 | 900389 | Land and Land Rights | 5,133,327 | 5,133,327 | 5,133,327 |
| 760 | | 900 | 390 | 900390 | Structures and Improvements | 69,930,589 | 70,085,564 | 70,189,384 |
| 761 | | 900 | 390.1 | 900390.1 | Bulk Power Office Building Remodeling | - | - | - |
| 762 | | 900 | 390.2 | 900390.2 | Bulk Power Office Building | - | - | - |
| 763 | | 900 | 391 | 900391 | Office Furniture and Equipment | 893,940 | 901,558 | 910,762 |
| 764 | | 900 | 391.1 | 900391.1 | Office Furniture and Equipment - PC System | - | - | - |
| 765 | | 900 | 391.2 | 900391.2 | Office Furniture and Equipment - PC's | - | - | - |
| 766 | | 900 | 391.3 | 900391.3 | Computer Hardware | - | - | - |
| 767 | | 900 | 391.5 | 900391.5 | Computer Hardware - Solar | - | - | - |
| 768 | | 900 | 391.7 | 900391.7 | Computer Hardware | - | - | - |
| 769 | | 900 | 392 | 900392 | Transportation Equipment - Light | 350,330 | 350,330 | 350,330 |
| 770 | | 900 | 392.1 | 900392.1 | Transportation Equipment - Heavy | 52,320 | 52,320 | 52,320 |
| 771 | | 900 | 392.2 | 900392.2 | Transportation Equipment - Trailers | 10,272 | 10,272 | 10,272 |
| 772 | | 900 | 392.4 | 900392.4 | Transportation Equipment - Leaseback | - | - | - |
| 773 | | 900 | 393 | 900393 | Stores Equipment | - | - | - |
| 774 | | 900 | 394 | 900394 | Tools, Shop & Garage Equipment | 584,525 | 592,267 | 592,267 |
| 775 | | 900 | 395 | 900395 | Laboratory Equipment | - | - | - |
| 776 | | 900 | 396 | 900396 | Power Operated Equipment | 26,134 | 26,134 | 26,134 |
| 777 | | 900 | 397 | 900397 | Communication Equipment | - | - | - |
| 778 | | 900 | 397.01 | 900397.01 | Computer Hardware | 47,501,421 | 47,531,682 | 47,013,481 |
| 779 | | 900 | 397.02 | 900397.02 | Computer Software | 197,183,944 | 197,628,343 | 198,951,386 |
| 780 | | 900 | 397.03 | 900397.03 | Communication Equipment | 5,097,570 | 5,097,570 | 5,097,570 |
| 781 | | 900 | 397.2 | 900397.2 | Communication Equipment | - | - | - |
| 782 | | 900 | 397.3 | 900397.3 | Communication Equipment | - | - | - |
| 783 | | 900 | 398 | 900398 | Miscellaneous Equipment | - | - | - |
| 784 | | 900 | 399.1 | 900399.1 | ARO General Plant-1 | - | - | - |
| 785 | | | | | | | | |
| 786 | **Total Corporate Unallocated** | | | | | 326,764,373 | 327,409,367 | 328,327,234 |
| 787 | | | | | | | | |
| 788 | **al Electric Plant In Service - with Corporate** | | 101/106 | | | 7,595,388,126 | 7,611,996,580 | 7,637,046,010 |
| 790 | **Electric Plant Purchased - with Corporate** | | 102 | | | | | |
| 792 | **Electric Plant Acq. Adj. - with Corporate** | | 114 | | | 16,641,072 | 16,571,734 | 16,502,396 |
| 793 | | | | | | | | |
| 794 | **Total Electric Plant - with Corporate** | | | | | 7,612,029,198 | 7,628,568,314 | 7,653,548,407 |

| | A | B | C | D | E | Q | R | S | T | U |
|---|---|---|---|---|---|---|---|---|---|---|
| 1 | **Public Service Company of New Mexico** | | | | | | | | | |
| 2 | **Schedule B-3** | | | | | | | | | |
| 3 | **Original Cost of Plant In Service by Monthly Balances** | | | | | | | | | |
| 4 | **Base Period Ending 6/30/2026** | | | | | | | | | |
| 5 | **Test Period Ending 9/30/2028** | | | | | | | | | |
| 6 | Link to WP Plant Lead Sheet | | | | | | | | | |
| 7 | | | | | | | | | | |
| 8 | **Base Period data is historical Information from the Company's Books and Records.** | | | | | | | | | |
| 9 | This schedule is sponsored by PNM Witness Gutierrez | | | | | | | | | |
| 10 | **Location** | **Location Number Note 6** | **FERC** | **Loc/ FERC** | **FERC Description** | **Balance 6/1/26** | **Base Period Ending Balance 6/30/26** | **Four Corners Impairment Note 1** | **Remove PV Asset Retirement Costs Note 2** | **Not Used** |
| 11 | | | | | | | | | | |
| 12 | **Production Plant** | | | | | | | | | |
| 13 | **Steam Production** | | | | | | | | | |
| 56 | **All - Steam** | | | | | | | | | |
| 57 | | | 310 | | Land and Land Rights | 618,487 | 618,487 | - | - | - |
| 58 | | | 310.1 | | Land Right of Way | 25,958 | 25,958 | (3,591) | - | - |
| 59 | | | 311 | | Structures & Improvements | 34,051,763 | 34,059,073 | (5,908,483) | - | - |
| 60 | | | 312 | | Boiler Plant Equipment | 312,310,982 | 312,355,608 | (50,313,403) | - | - |
| 61 | | | 314 | | Turbogenerator Units | 76,322,598 | 76,285,943 | (9,436,121) | - | - |
| 62 | | | 315 | | Accessory Electric Equipment | 25,318,549 | 25,314,103 | (4,905,626) | - | - |
| 63 | | | 315.01 | | Computer Hardware | - | - | - | - | - |
| 64 | | | 315.02 | | Computer Software | 1,362,246 | 1,362,246 | - | - | - |
| 65 | | | 315.03 | | Communication Equipment | 334,053 | 334,053 | - | - | - |
| 66 | | | 316 | | Misc Power Plant Equipment | 35,480,928 | 35,518,438 | (7,381,116) | - | - |
| 67 | | | 317 | | Asset Retirement Costs - Steam | 10,249,476 | 10,249,476 | - | - | - |
| 68 | **Total Steam Production Gross Plant** | | | | | 496,075,040 | 496,123,385 | (77,948,340) | - | - |
| 69 | | | | | | | | | | |
| 70 | | | | | | | | | | |
| 71 | **Nuclear Production** | | | | | | | | | |
| 129 | **All - Nuclear** | | | | | | | | | |
| 130 | | | 320 | | Land and Land Rights | 439,822 | 439,822 | - | - | - |
| 131 | | | 320.1 | | Land - Right of Way | 44,622 | 44,622 | - | - | - |
| 132 | | | 321 | | Structures and Improvements | 206,216,943 | 206,141,876 | - | - | - |
| 133 | | | 322 | | Reactor Plant Equipment | 335,248,922 | 335,766,969 | - | - | - |
| 134 | | | 323 | | Turbogenerator Units | 114,980,831 | 114,979,772 | - | - | - |
| 135 | | | 324 | | Accessory Electric Equipment | 60,977,225 | 60,921,349 | - | - | - |
| 136 | | | 324.01 | | Computer Hardware | - | - | - | - | - |
| 137 | | | 324.02 | | Computer Software | 13,045,704 | 13,073,078 | - | - | - |
| 138 | | | 324.03 | | Communication Equipment | 448,148 | 404,583 | - | - | - |
| 139 | | | 325 | | Misc Power Plant Equipment | 71,088,869 | 71,030,834 | - | - | - |
| 140 | | | 326 | | Asset Retirement Costs Nuclear Prod Plant | 12,831,931 | 12,831,931 | - | (12,831,931) | - |
| 141 | **Total Nuclear Production Gross Plant** | | | | | 815,323,016 | 815,634,837 | - | (12,831,931) | - |

| | A | B | C | D | E | Q | R | S | T | U |
|---|---|---|---|---|---|---|---|---|---|---|
| 1 | **Public Service Company of New Mexico** | | | | | | | | | |
| 2 | **Schedule B-3** | | | | | | | | | |
| 3 | **Original Cost of Plant In Service by Monthly Balances** | | | | | | | | | |
| 4 | **Base Period Ending 6/30/2026** | | | | | | | | | |
| 5 | **Test Period Ending 9/30/2028** | | | | | | | | | |
| 6 | Link to WP Plant Lead Sheet | | | | | | | | | |
| 7 | | | | | | | | | | |
| 8 | **Base Period data is historical Information from the Company's Books and Records.** | | | | | | | | | |
| 9 | This schedule is sponsored by PNM Witness Gutierrez | | | | | | | | | |
| 10 | **Location** | **Location Number Note 6** | **FERC** | **Loc/ FERC** | **FERC Description** | **Balance 6/1/26** | **Base Period Ending Balance 6/30/26** | **Four Corners Impairment Note 1** | **Remove PV Asset Retirement Costs Note 2** | **Not Used** |
| 142 | | | | | | | | | | |
| 143 | | | | | | | | | | |
| 144 | **Solar Production** | | | | | | | | | |
| 237 | **All - Solar** | | | | | | | | | |
| 238 | | | 338.01 | | Land & Land Rights | 11,040,948 | 11,040,948 | - | - | - |
| 239 | | | 338.02 | | Structures and Improvements | 268,299 | 268,299 | - | - | - |
| 240 | | | 338.04 | | Solar Panels | 277,545,592 | 277,545,592 | - | - | - |
| 241 | | | 338.05 | | Collector System | 8,264,812 | 8,264,812 | - | - | - |
| 242 | | | 338.07 | | Solar Inverters | - | - | - | - | - |
| 243 | | | 338.08 | | Other Accessory Electrical Equipment | 33,903,100 | 33,903,100 | - | - | - |
| 244 | | | 338.09 | | Computer Hardware | 51,760 | 51,760 | - | - | - |
| 245 | | | 338.10 | | Computer Software | - | - | - | - | - |
| 246 | | | 338.11 | | Communication Equipment | 637,577 | 637,577 | - | - | - |
| 247 | | | 338.12 | | Misc. Power Plant Equipment | 5,228,178 | 5,228,178 | - | - | - |
| 248 | **Total Solar Production Gross Plant** | | | | | 336,940,266 | 336,940,266 | - | - | - |
| 249 | | | | | | | | | | |
| 250 | **Other Production** | | | | | | | | | |
| 251 | | | | | | | | | | |
| 252 | **Other Production - Gas:** | | | | | | | | | |
| 339 | **All - Gas** | | 340 | | Land and Land Rights | 7,079,884 | 7,079,884 | - | - | - |
| 340 | | | 340.1 | | Land - Right of Way | 1,959,313 | 1,959,313 | - | - | - |
| 341 | | | 341 | | Structures and Improvements | 93,817,565 | 95,355,528 | - | - | - |
| 342 | | | 342 | | Fuel Holders, Producers, Accessories | 120,237,993 | 120,435,397 | - | - | - |
| 343 | | | 343 | | Prime Movers | - | - | - | - | - |
| 344 | | | 344 | | Generators | 259,291,704 | 257,177,775 | - | - | - |
| 345 | | | 345 | | Accessory Electric Equipment | 24,125,557 | 24,125,557 | - | - | - |
| 346 | | | 345.01 | | Computer Hardware | 53,885 | 53,885 | - | - | - |
| 347 | | | 345.02 | | Computer Software | 60,931 | 60,931 | - | - | - |
| 348 | | | 345.03 | | Communication Equipment | 38,862 | 38,862 | - | - | - |
| 349 | | | 346 | | Misc Power Plant Equipment | 46,295,766 | 46,295,516 | - | - | - |
| 350 | | | 347 | | Asset Retirement Costs - Other Production | 7,008,573 | 7,008,573 | - | - | - |
| 351 | **Total Other Production Plant - Gas** | | | | | 559,970,034 | 559,591,222 | - | - | - |
| 352 | | | | | | | | | | |
| 353 | | | | | | | | | | |
| 354 | **Total Other Production Gross Plant** | | | | | 559,970,034 | 559,591,222 | - | - | - |
| 355 | | | | | | | | | | |
| 356 | **Total Gross Plant Production** | | | | | 2,208,308,356 | 2,208,289,710 | (77,948,340) | (12,831,931) | - |
| 357 | | | | | | | | | | |
| 358 | | | | | | | | | | |

| | A | B | C | D | E | Q | R | S | T | U |
|---|---|---|---|---|---|---|---|---|---|---|
| 1 | **Public Service Company of New Mexico** | | | | | | | | | |
| 2 | **Schedule B-3** | | | | | | | | | |
| 3 | **Original Cost of Plant In Service by Monthly Balances** | | | | | | | | | |
| 4 | **Base Period Ending 6/30/2026** | | | | | | | | | |
| 5 | **Test Period Ending 9/30/2028** | | | | | | | | | |
| 6 | Link to WP Plant Lead Sheet | | | | | | | | | |
| 7 | | | | | | | | | | |
| 8 | **Base Period data is historical Information from the Company's Books and Records.** | | | | | | | | | |
| 9 | This schedule is sponsored by PNM Witness Gutierrez | | | | | | | | | |
| 10 | **Location** | **Location Number Note 6** | **FERC** | **Loc/ FERC** | **FERC Description** | **Balance 6/1/26** | **Base Period Ending Balance 6/30/26** | **Four Corners Impairment Note 1** | **Remove PV Asset Retirement Costs Note 2** | **Not Used** |
| 359 | **Total Gross Energy Storage Plant** | | | | | | | | | |
| 386 | **All - Energy Storage** | | 387.01 | 387.01 | Land & Land Rights | - | - | - | - | - |
| 387 | | | 387.02 | 387.02 | Structures & Improvements | 667,798 | 23,176,806 | - | - | - |
| 388 | | | 387.03 | 387.03 | Energy Storage Equipment | 19,592,692 | 33,059,123 | - | - | - |
| 389 | | | 387.05 | 387.05 | Collector System | 4,857,003 | 25,624,069 | - | - | - |
| 390 | | | 387.06 | 387.06 | Generator Step-Up Transformers (GSU) | 1,724,151 | 59,151,201 | - | - | - |
| 391 | | | 387.07 | 387.07 | Inverters | - | - | - | - | - |
| 392 | | | 387.08 | 387.08 | Computer Hardware | - | 5,348,140 | - | - | - |
| 393 | | | 387.09 | 387.09 | Computer Software | 605,006 | 965,150 | - | - | - |
| 394 | | | 387.10 | 387.10 | Communication Equipment | 545,603 | 1,233,478 | - | - | - |
| 395 | | | 387.11 | 387.11 | Misc. Energy Storage Equipment | 5,244,213 | 7,837,251 | - | - | - |
| 396 | | | 387.12 | 387.12 | Asset Retirement Costs for Energy Storage | - | - | - | - | - |
| 397 | **Total Gross Energy Storage Plant** | | | | | 33,236,465 | 156,395,217 | - | - | - |
| 398 | | | | | | | | | | |
| 399 | | | | | | | | | | |
| 400 | **Gross Plant Transmission Plant** | | | | | | | | | |
| 401 | | | | | | | | | | |
| 402 | | | | | | | | | | |
| 453 | **All - Transmission** | | | | | | | | | |
| 454 | | 650 | 350 | 650350 | Land and Land Rights | 80,549,192 | 81,554,885 | - | - | - |
| 455 | | 650 | 350.1 | 650350.1 | Land - Right of Way | 53,100,094 | 53,100,094 | - | - | - |
| 456 | | 650 | 351.01 | 650350.01 | Computer Hardware | 19,194,093 | 17,356,153 | - | - | - |
| 457 | | 650 | 351.02 | 650350.02 | Computer Software | 9,138,193 | 9,284,877 | - | - | - |
| 458 | | 650 | 351.03 | 650350.03 | Communication Equipment | 47,654,523 | 47,247,395 | - | - | - |
| 459 | | 650 | 352 | 650352 | Structures and Improvements | 246,912,866 | 247,003,049 | - | - | - |
| 460 | | 650 | 353 | 650353 | Station Equipment | 962,317,704 | 962,423,537 | - | - | - |
| 461 | | 650 | 353.1 | 650353.1 | Station Equipment - Step-up Xfmr and Aux | 12,193,036 | 12,193,036 | - | - | - |
| 462 | | 650 | 354 | 650354 | Towers and Fixtures | 64,320,097 | 64,316,194 | - | - | - |
| 463 | | 650 | 355 | 650355 | Poles and Fixtures | 558,220,561 | 558,236,602 | - | - | - |
| 464 | | 650 | 356 | 650356 | Overhead Conductors and Devices | 233,441,887 | 233,495,347 | - | - | - |
| 465 | | 650 | 357 | 650357 | Underground Conduit | 185,394 | 185,394 | - | - | - |
| 466 | | 650 | 359 | 650359 | Roads and Trails | 9,800,590 | 9,800,590 | - | - | - |
| 467 | **Total Gross Plant Transmission Plant** | | | | | 2,297,028,230 | 2,296,197,155 | - | - | - |
| 468 | | | | | | | | | | |

| | A | B | C | D | E | Q | R | S | T | U |
|---|---|---|---|---|---|---|---|---|---|---|
| 1 | **Public Service Company of New Mexico** | | | | | | | | | |
| 2 | **Schedule B-3** | | | | | | | | | |
| 3 | **Original Cost of Plant In Service by Monthly Balances** | | | | | | | | | |
| 4 | **Base Period Ending 6/30/2026** | | | | | | | | | |
| 5 | **Test Period Ending 9/30/2028** | | | | | | | | | |
| 6 | Link to WP Plant Lead Sheet | | | | | | | | | |
| 7 | | | | | | | | | | |
| 8 | **Base Period data is historical Information from the Company's Books and Records.** | | | | | | | | | |
| 9 | This schedule is sponsored by PNM Witness Gutierrez | | | | | | | | | |
| 10 | **Location** | **Location Number Note 6** | **FERC** | **Loc/ FERC** | **FERC Description** | **Balance 6/1/26** | **Base Period Ending Balance 6/30/26** | **Four Corners Impairment Note 1** | **Remove PV Asset Retirement Costs Note 2** | **Not Used** |
| 469 | | | | | | | | | | |
| 470 | | | | | | | | | | |
| 471 | **Gross Plant Distribution Plant** | | | | | | | | | |
| 665 | **All - Distribution** | | | | | | | | | |
| 666 | | | 360 | | Land and Land Rights | 9,747,123 | 10,417,584 | - | - | - |
| 667 | | | 360.1 | | Land - Right of Way | 2,121,278 | 2,121,278 | - | - | - |
| 668 | | | 361 | | Structures and Improvements | 72,975,172 | 72,959,760 | - | - | - |
| 669 | | | 362 | | Station Equipment | 330,584,483 | 331,313,566 | - | - | - |
| 670 | | | 363.01 | | Computer Hardware | 7,682,583 | 7,679,772 | - | - | - |
| 671 | | | 363.02 | | Computer Software | 52,164,529 | 52,092,734 | - | - | - |
| 672 | | | 363.03 | | Communication Equipment | 18,801,973 | 18,438,804 | - | - | - |
| 673 | | | 364 | | Poles, Towers and Fixtures | 465,126,367 | 470,868,364 | - | - | - |
| 674 | | | 365 | | Overhead Conductors and Devices | 295,530,950 | 296,134,853 | - | - | - |
| 675 | | | 366 | | Underground Conduit | 196,036,254 | 198,451,082 | - | - | - |
| 676 | | | 367 | | Underground Conductors and Devices | 472,442,528 | 478,841,595 | - | - | - |
| 677 | | | 368 | | Line Transformers | 291,662,195 | 292,030,680 | - | - | - |
| 678 | | | 369 | | Services | 103,021,939 | 103,021,939 | - | - | - |
| 679 | | | 369.1 | | Services - Underground | 178,879,452 | 178,879,452 | - | - | - |
| 680 | | | 370 | | Meters Net Plant - PNM | 67,535,748 | 67,541,744 | - | - | - |
| 681 | | | 370.4 | | Meters Net Plant - Grid Mod | 210,668 | 210,668 | - | - | - |
| 682 | | | 371 | | Installations on Customers' Premises | 9,151,530 | 9,151,530 | - | - | - |
| 683 | | | 371.1 | | Leased Flood Lighting | 307,353 | 307,353 | - | - | - |
| 684 | | | 373 | | Street Lighting and Signal Systems | 31,262,120 | 31,058,860 | - | - | - |
| 685 | | | 374 | | Asset Retirement Costs - Distribution | - | - | - | - | - |
| 686 | **Total Gross Plant Distribution Plant** | | | | | 2,605,244,247 | 2,621,521,617 | - | - | - |
| 687 | | | | | | | | | | |

| | A | B | C | D | E | Q | R | S | T | U |
|---|---|---|---|---|---|---|---|---|---|---|
| 1 | **Public Service Company of New Mexico** | | | | | | | | | |
| 2 | **Schedule B-3** | | | | | | | | | |
| 3 | **Original Cost of Plant In Service by Monthly Balances** | | | | | | | | | |
| 4 | **Base Period Ending 6/30/2026** | | | | | | | | | |
| 5 | **Test Period Ending 9/30/2028** | | | | | | | | | |
| 6 | Link to WP Plant Lead Sheet | | | | | | | | | |
| 7 | | | | | | | | | | |
| 8 | **Base Period data is historical Information from the Company's Books and Records.** | | | | | | | | | |
| 9 | This schedule is sponsored by PNM Witness Gutierrez | | | | | | | | | |
| 10 | **Location** | **Location Number Note 6** | **FERC** | **Loc/ FERC** | **FERC Description** | **Balance 6/1/26** | **Base Period Ending Balance 6/30/26** | **Four Corners Impairment Note 1** | **Remove PV Asset Retirement Costs Note 2** | **Not Used** |
| 688 | | | | | | | | | | |
| 689 | **Gross Plant G&I Plant (303,389-399)** | | | | | | | | | |
| 719 | **Total General & Intangible Plant** | | | | | | | | | |
| 720 | | | 303 | 303 | Miscellaneous Intangible Plant | - | - | - | - | - |
| 721 | | | 389 | 389 | Land and Land Rights | 1,937,568 | 1,937,568 | - | - | - |
| 722 | | | 390 | 390 | Structures and Improvements | 73,888,046 | 74,004,202 | - | - | - |
| 723 | | | 390.1 | 390.1 | Bulk Power Office Building Remodeling | 5,904,067 | 5,904,067 | - | - | - |
| 724 | | | 390.2 | 390.2 | Bulk Power Office Building | 5,945,142 | 5,945,142 | - | - | - |
| 725 | | | 391 | 391 | Office Furniture and Equipment | 5,055,574 | 4,955,173 | - | - | - |
| 726 | | | 391.1 | 391.1 | Office Furniture and Equipment - PC System | - | - | - | - | - |
| 727 | | | 391.2 | 391.2 | Office Furniture and Equipment - PC's | - | - | - | - | - |
| 728 | | | 391.3 | 391.3 | Computer Hardware | - | - | - | - | - |
| 729 | | | 391.5 | 391.5 | Computer Hardware - Solar | - | - | - | - | - |
| 730 | | | 391.7 | 391.7 | Computer Hardware | - | - | - | - | - |
| 731 | | | 392 | 392 | Transportation Equipment - Light | 4,418,639 | 4,426,263 | - | - | - |
| 732 | | | 392.1 | 392.1 | Transportation Equipment - Heavy | 5,035,647 | 5,035,647 | - | - | - |
| 733 | | | 392.2 | 392.2 | Transportation Equipment - Trailers | 8,516,240 | 8,516,240 | - | - | - |
| 734 | | | 392.4 | 392.4 | Transportation Equipment - Leaseback | - | - | - | - | - |
| 735 | | | 393 | 393 | Stores Equipment | 97,939 | 97,939 | - | - | - |
| 736 | | | 394 | 394 | Tools, Shop & Garage Equipment | 20,613,851 | 20,059,732 | - | - | - |
| 737 | | | 395 | 395 | Laboratory Equipment | 206,265 | 206,265 | - | - | - |
| 738 | | | 396 | 396 | Power Operated Equipment | 7,409,871 | 7,409,871 | - | - | - |
| 739 | | | 397.01 | 397.01 | Computer Hardware | 2,386,424 | 2,386,424 | - | - | - |
| 740 | | | 397.02 | 397.02 | Computer Software | 35,301,980 | 35,351,749 | - | - | - |
| 741 | | | 397.03 | 397.03 | Communication Equipment | - | - | - | - | - |
| 742 | | | 398 | 398 | Miscellaneous Equipment | 1,764,881 | 1,777,493 | - | - | - |
| 743 | | | 399.1 | 399.1 | ARO General Plant-1 | 19,473 | 19,473 | - | - | - |
| 744 | **Total Gross Plant G&I Plant - PNM** | | | | | 178,501,607 | 178,033,247 | - | - | - |
| 745 | | | | | | | | | | |
| 746 | **Total Electric Plant In Service** | | 101/106 | | | 7,322,318,904 | 7,460,436,946 | (77,948,340) | (12,831,931) | - |
| 747 | | | | | | | | | | |
| 748 | **Electric Plant Purchased** | | 102 | | | | | | | |
| 749 | | | | | | | | | | |
| 750 | **Electric Plant Acquisition Adjustment** | | | | Acq. Adj. - Palo Verde Unit 1&2 (Drexel) | | | | | |
| 751 | | | | | Acq. Adj. - Palo Verde Unit 2 (First Chicago) | 16,433,058 | 16,363,721 | - | - | - |
| 752 | | | | | Acq. Adj. - (EIP) | - | - | - | - | - |
| 753 | **Electric Plant Acquisition Adjustment** | | 114 | | | 16,433,058 | 16,363,721 | - | - | - |
| 754 | | | | | | | | | | |
| 755 | **Total Electric Plant** | | | | | 7,338,751,963 | 7,476,800,667 | (77,948,340) | (12,831,931) | - |
| 756 | | | | | | | | | | |
| 757 | | | | | | | | | | |

| | A | B | C | D | E | Q | R | S | T | U |
|---|---|---|---|---|---|---|---|---|---|---|
| 1 | **Public Service Company of New Mexico** | | | | | | | | | |
| 2 | **Schedule B-3** | | | | | | | | | |
| 3 | **Original Cost of Plant In Service by Monthly Balances** | | | | | | | | | |
| 4 | **Base Period Ending 6/30/2026** | | | | | | | | | |
| 5 | **Test Period Ending 9/30/2028** | | | | | | | | | |
| 6 | Link to WP Plant Lead Sheet | | | | | | | | | |
| 7 | | | | | | | | | | |
| 8 | **Base Period data is historical Information from the Company's Books and Records.** | | | | | | | | | |
| 9 | This schedule is sponsored by PNM Witness Gutierrez | | | | | | | | | |
| 10 | **Location** | **Location Number Note 6** | **FERC** | **Loc/ FERC** | **FERC Description** | **Balance 6/1/26** | **Base Period Ending Balance 6/30/26** | **Four Corners Impairment Note 1** | **Remove PV Asset Retirement Costs Note 2** | **Not Used** |
| 758 | **Corporate Unallocated** | 900 | 303 | 900303 | Miscellaneous Intangible Plant | - | - | - | - | - |
| 759 | | 900 | 389 | 900389 | Land and Land Rights | 5,133,327 | 5,133,327 | - | - | - |
| 760 | | 900 | 390 | 900390 | Structures and Improvements | 72,026,539 | 72,033,942 | - | - | - |
| 761 | | 900 | 390.1 | 900390.1 | Bulk Power Office Building Remodeling | - | - | - | - | - |
| 762 | | 900 | 390.2 | 900390.2 | Bulk Power Office Building | - | - | - | - | - |
| 763 | | 900 | 391 | 900391 | Office Furniture and Equipment | 1,016,114 | 1,016,114 | - | - | - |
| 764 | | 900 | 391.1 | 900391.1 | Office Furniture and Equipment - PC System | - | - | - | - | - |
| 765 | | 900 | 391.2 | 900391.2 | Office Furniture and Equipment - PC's | - | - | - | - | - |
| 766 | | 900 | 391.3 | 900391.3 | Computer Hardware | - | - | - | - | - |
| 767 | | 900 | 391.5 | 900391.5 | Computer Hardware - Solar | - | - | - | - | - |
| 768 | | 900 | 391.7 | 900391.7 | Computer Hardware | - | - | - | - | - |
| 769 | | 900 | 392 | 900392 | Transportation Equipment - Light | 350,330 | 350,330 | - | - | - |
| 770 | | 900 | 392.1 | 900392.1 | Transportation Equipment - Heavy | 52,320 | 52,320 | - | - | - |
| 771 | | 900 | 392.2 | 900392.2 | Transportation Equipment - Trailers | 10,272 | 10,272 | - | - | - |
| 772 | | 900 | 392.4 | 900392.4 | Transportation Equipment - Leaseback | - | - | - | - | - |
| 773 | | 900 | 393 | 900393 | Stores Equipment | - | - | - | - | - |
| 774 | | 900 | 394 | 900394 | Tools, Shop & Garage Equipment | 592,267 | 592,267 | - | - | - |
| 775 | | 900 | 395 | 900395 | Laboratory Equipment | - | - | - | - | - |
| 776 | | 900 | 396 | 900396 | Power Operated Equipment | 26,134 | 26,134 | - | - | - |
| 777 | | 900 | 397 | 900397 | Communication Equipment | - | - | - | - | - |
| 778 | | 900 | 397.01 | 900397.01 | Computer Hardware | 47,722,284 | 38,267,382 | - | - | - |
| 779 | | 900 | 397.02 | 900397.02 | Computer Software | 210,082,176 | 204,629,139 | - | - | - |
| 780 | | 900 | 397.03 | 900397.03 | Communication Equipment | 5,097,570 | 5,097,570 | - | - | - |
| 781 | | 900 | 397.2 | 900397.2 | Communication Equipment | - | - | - | - | - |
| 782 | | 900 | 397.3 | 900397.3 | Communication Equipment | - | - | - | - | - |
| 783 | | 900 | 398 | 900398 | Miscellaneous Equipment | - | - | - | - | - |
| 784 | | 900 | 399.1 | 900399.1 | ARO General Plant-1 | - | - | - | - | - |
| 785 | | | | | | | | | | |
| 786 | **Total Corporate Unallocated** | | | | | 342,109,334 | 327,208,799 | - | - | - |
| 787 | | | | | | | | | | |
| 788 | **al Electric Plant In Service - with Corporate** | | 101/106 | | | 7,664,428,238 | 7,787,645,745 | (77,948,340) | (12,831,931) | - |
| 790 | **Electric Plant Purchased - with Corporate** | | 102 | | | | | | | |
| 792 | **Electric Plant Acq. Adj. - with Corporate** | | 114 | | | 16,433,058 | 16,363,721 | - | - | - |
| 793 | | | | | | | | | | |
| 794 | **Total Electric Plant - with Corporate** | | | | | 7,680,861,297 | 7,804,009,466 | (77,948,340) | (12,831,931) | - |

| | A | B | C | D | E | V | W | X |
|---|---|---|---|---|---|---|---|---|
| 1 | **Public Service Company of New Mexico** | | | | | | | |
| 2 | **Schedule B-3** | | | | | | | |
| 3 | **Original Cost of Plant In Service by Monthly Balances** | | | | | | | |
| 4 | **Base Period Ending 6/30/2026** | | | | | | | |
| 5 | **Test Period Ending 9/30/2028** | | | | | | | |
| 6 | Link to WP Plant Lead Sheet | | | | | | | |
| 7 | | | | | | | | |
| 8 | **Base Period data is historical Information from the Company's Books and Records.** | | | | | | | |
| 9 | This schedule is sponsored by PNM Witness Gutierrez | | | | | | | |
| 10 | **Location** | **Location Number Note 6** | **FERC** | **Loc/ FERC** | **FERC Description** | **PV Lease Expiration Note 3** | **Shared Service Allocation Note 4** | **Total Base Period Adjustments Sum of Column S through Column W** |
| 11 | | | | | | | | |
| 12 | **Production Plant** | | | | | | | |
| 13 | **Steam Production** | | | | | | | |
| 56 | **All - Steam** | | | | | | | |
| 57 | | | 310 | | Land and Land Rights | - | - | - |
| 58 | | | 310.1 | | Land Right of Way | - | - | (3,591) |
| 59 | | | 311 | | Structures & Improvements | - | - | (5,908,483) |
| 60 | | | 312 | | Boiler Plant Equipment | - | - | (50,313,403) |
| 61 | | | 314 | | Turbogenerator Units | - | - | (9,436,121) |
| 62 | | | 315 | | Accessory Electric Equipment | - | - | (4,905,626) |
| 63 | | | 315.01 | | Computer Hardware | - | - | - |
| 64 | | | 315.02 | | Computer Software | - | - | - |
| 65 | | | 315.03 | | Communication Equipment | - | - | - |
| 66 | | | 316 | | Misc Power Plant Equipment | - | - | (7,381,116) |
| 67 | | | 317 | | Asset Retirement Costs - Steam | - | - | - |
| 68 | **Total Steam Production Gross Plant** | | | | | - | - | (77,948,340) |
| 69 | | | | | | | | |
| 70 | | | | | | | | |
| 71 | **Nuclear Production** | | | | | | | |
| 129 | **All - Nuclear** | | | | | | | |
| 130 | | | 320 | | Land and Land Rights | - | - | - |
| 131 | | | 320.1 | | Land - Right of Way | - | - | - |
| 132 | | | 321 | | Structures and Improvements | - | - | - |
| 133 | | | 322 | | Reactor Plant Equipment | - | - | - |
| 134 | | | 323 | | Turbogenerator Units | - | - | - |
| 135 | | | 324 | | Accessory Electric Equipment | - | - | - |
| 136 | | | 324.01 | | Computer Hardware | - | - | - |
| 137 | | | 324.02 | | Computer Software | - | - | - |
| 138 | | | 324.03 | | Communication Equipment | - | - | - |
| 139 | | | 325 | | Misc Power Plant Equipment | - | - | - |
| 140 | | | 326 | | Asset Retirement Costs Nuclear Prod Plant | - | - | (12,831,931) |
| 141 | **Total Nuclear Production Gross Plant** | | | | | - | - | (12,831,931) |

| | A | B | C | D | E | V | W | X |
|---|---|---|---|---|---|---|---|---|
| 1 | **Public Service Company of New Mexico** | | | | | | | |
| 2 | **Schedule B-3** | | | | | | | |
| 3 | **Original Cost of Plant In Service by Monthly Balances** | | | | | | | |
| 4 | **Base Period Ending 6/30/2026** | | | | | | | |
| 5 | **Test Period Ending 9/30/2028** | | | | | | | |
| 6 | Link to WP Plant Lead Sheet | | | | | | | |
| 7 | | | | | | | | |
| 8 | **Base Period data is historical Information from the Company's Books and Records.** | | | | | | | |
| 9 | This schedule is sponsored by PNM Witness Gutierrez | | | | | | | |
| 10 | **Location** | **Location Number Note 6** | **FERC** | **Loc/ FERC** | **FERC Description** | **PV Lease Expiration Note 3** | **Shared Service Allocation Note 4** | **Total Base Period Adjustments Sum of Column S through Column W** |
| 142 | | | | | | | | |
| 143 | | | | | | | | |
| 144 | **Solar Production** | | | | | | | |
| 237 | **All - Solar** | | | | | | | |
| 238 | | | 338.01 | | Land & Land Rights | - | - | - |
| 239 | | | 338.02 | | Structures and Improvements | - | - | - |
| 240 | | | 338.04 | | Solar Panels | - | - | - |
| 241 | | | 338.05 | | Collector System | - | - | - |
| 242 | | | 338.07 | | Solar Inverters | - | - | - |
| 243 | | | 338.08 | | Other Accessory Electrical Equipment | - | - | - |
| 244 | | | 338.09 | | Computer Hardware | - | - | - |
| 245 | | | 338.10 | | Computer Software | - | - | - |
| 246 | | | 338.11 | | Communication Equipment | - | - | - |
| 247 | | | 338.12 | | Misc. Power Plant Equipment | - | - | - |
| 248 | **Total Solar Production Gross Plant** | | | | | - | - | - |
| 249 | | | | | | | | |
| 250 | **Other Production** | | | | | | | |
| 251 | | | | | | | | |
| 252 | **Other Production - Gas:** | | | | | | | |
| 339 | **All - Gas** | | 340 | | Land and Land Rights | - | - | - |
| 340 | | | 340.1 | | Land - Right of Way | - | - | - |
| 341 | | | 341 | | Structures and Improvements | - | - | - |
| 342 | | | 342 | | Fuel Holders, Producers, Accessories | - | - | - |
| 343 | | | 343 | | Prime Movers | - | - | - |
| 344 | | | 344 | | Generators | - | - | - |
| 345 | | | 345 | | Accessory Electric Equipment | - | - | - |
| 346 | | | 345.01 | | Computer Hardware | - | - | - |
| 347 | | | 345.02 | | Computer Software | - | - | - |
| 348 | | | 345.03 | | Communication Equipment | - | - | - |
| 349 | | | 346 | | Misc Power Plant Equipment | - | - | - |
| 350 | | | 347 | | Asset Retirement Costs - Other Production | - | - | - |
| 351 | **Total Other Production Plant - Gas** | | | | | - | - | - |
| 352 | | | | | | | | |
| 353 | | | | | | | | |
| 354 | **Total Other Production Gross Plant** | | | | | - | - | - |
| 355 | | | | | | | | |
| 356 | **Total Gross Plant Production** | | | | | - | - | (90,780,271) |
| 357 | | | | | | | | |
| 358 | | | | | | | | |

| | A | B | C | D | E | V | W | X |
|---|---|---|---|---|---|---|---|---|
| 1 | **Public Service Company of New Mexico** | | | | | | | |
| 2 | **Schedule B-3** | | | | | | | |
| 3 | **Original Cost of Plant In Service by Monthly Balances** | | | | | | | |
| 4 | **Base Period Ending 6/30/2026** | | | | | | | |
| 5 | **Test Period Ending 9/30/2028** | | | | | | | |
| 6 | Link to WP Plant Lead Sheet | | | | | | | |
| 7 | | | | | | | | |
| 8 | **Base Period data is historical Information from the Company's Books and Records.** | | | | | | | |
| 9 | This schedule is sponsored by PNM Witness Gutierrez | | | | | | | |
| 10 | **Location** | **Location Number Note 6** | **FERC** | **Loc/ FERC** | **FERC Description** | **PV Lease Expiration Note 3** | **Shared Service Allocation Note 4** | **Total Base Period Adjustments Sum of Column S through Column W** |
| 359 | **Total Gross Energy Storage Plant** | | | | | | | |
| 386 | **All - Energy Storage** | | 387.01 | 387.01 | Land & Land Rights | - | - | - |
| 387 | | | 387.02 | 387.02 | Structures & Improvements | - | - | - |
| 388 | | | 387.03 | 387.03 | Energy Storage Equipment | - | - | - |
| 389 | | | 387.05 | 387.05 | Collector System | - | - | - |
| 390 | | | 387.06 | 387.06 | Generator Step-Up Transformers (GSU) | - | - | - |
| 391 | | | 387.07 | 387.07 | Inverters | - | - | - |
| 392 | | | 387.08 | 387.08 | Computer Hardware | - | - | - |
| 393 | | | 387.09 | 387.09 | Computer Software | - | - | - |
| 394 | | | 387.10 | 387.10 | Communication Equipment | - | - | - |
| 395 | | | 387.11 | 387.11 | Misc. Energy Storage Equipment | - | - | - |
| 396 | | | 387.12 | 387.12 | Asset Retirement Costs for Energy Storage | - | - | - |
| 397 | **Total Gross Energy Storage Plant** | | | | | - | - | - |
| 398 | | | | | | | | |
| 399 | | | | | | | | |
| 400 | **Gross Plant Transmission Plant** | | | | | | | |
| 401 | | | | | | | | |
| 402 | | | | | | | | |
| 453 | **All - Transmission** | | | | | | | |
| 454 | | 650 | 350 | 650350 | Land and Land Rights | - | - | - |
| 455 | | 650 | 350.1 | 650350.1 | Land - Right of Way | - | - | - |
| 456 | | 650 | 351.01 | 650350.01 | Computer Hardware | - | - | - |
| 457 | | 650 | 351.02 | 650350.02 | Computer Software | - | - | - |
| 458 | | 650 | 351.03 | 650350.03 | Communication Equipment | - | - | - |
| 459 | | 650 | 352 | 650352 | Structures and Improvements | (1,042,150) | - | (1,042,150) |
| 460 | | 650 | 353 | 650353 | Station Equipment | - | - | - |
| 461 | | 650 | 353.1 | 650353.1 | Station Equipment - Step-up Xfmr and Aux | - | - | - |
| 462 | | 650 | 354 | 650354 | Towers and Fixtures | - | - | - |
| 463 | | 650 | 355 | 650355 | Poles and Fixtures | - | - | - |
| 464 | | 650 | 356 | 650356 | Overhead Conductors and Devices | - | - | - |
| 465 | | 650 | 357 | 650357 | Underground Conduit | - | - | - |
| 466 | | 650 | 359 | 650359 | Roads and Trails | - | - | - |
| 467 | **Total Gross Plant Transmission Plant** | | | | | (1,042,150) | - | (1,042,150) |
| 468 | | | | | | | | |

| | A | B | C | D | E | V | W | X |
|---|---|---|---|---|---|---|---|---|
| 1 | **Public Service Company of New Mexico** | | | | | | | |
| 2 | **Schedule B-3** | | | | | | | |
| 3 | **Original Cost of Plant In Service by Monthly Balances** | | | | | | | |
| 4 | **Base Period Ending 6/30/2026** | | | | | | | |
| 5 | **Test Period Ending 9/30/2028** | | | | | | | |
| 6 | Link to WP Plant Lead Sheet | | | | | | | |
| 7 | | | | | | | | |
| 8 | **Base Period data is historical Information from the Company's Books and Records.** | | | | | | | |
| 9 | This schedule is sponsored by PNM Witness Gutierrez | | | | | | | |
| 10 | **Location** | **Location Number Note 6** | **FERC** | **Loc/ FERC** | **FERC Description** | **PV Lease Expiration Note 3** | **Shared Service Allocation Note 4** | **Total Base Period Adjustments Sum of Column S through Column W** |
| 469 | | | | | | | | |
| 470 | | | | | | | | |
| 471 | **Gross Plant Distribution Plant** | | | | | | | |
| 665 | **All - Distribution** | | | | | | | |
| 666 | | | 360 | | Land and Land Rights | - | - | - |
| 667 | | | 360.1 | | Land - Right of Way | - | - | - |
| 668 | | | 361 | | Structures and Improvements | - | - | - |
| 669 | | | 362 | | Station Equipment | - | - | - |
| 670 | | | 363.01 | | Computer Hardware | - | - | - |
| 671 | | | 363.02 | | Computer Software | - | - | - |
| 672 | | | 363.03 | | Communication Equipment | - | - | - |
| 673 | | | 364 | | Poles, Towers and Fixtures | - | - | - |
| 674 | | | 365 | | Overhead Conductors and Devices | - | - | - |
| 675 | | | 366 | | Underground Conduit | - | - | - |
| 676 | | | 367 | | Underground Conductors and Devices | - | - | - |
| 677 | | | 368 | | Line Transformers | - | - | - |
| 678 | | | 369 | | Services | - | - | - |
| 679 | | | 369.1 | | Services - Underground | - | - | - |
| 680 | | | 370 | | Meters Net Plant - PNM | - | - | - |
| 681 | | | 370.4 | | Meters Net Plant - Grid Mod | - | - | - |
| 682 | | | 371 | | Installations on Customers' Premises | - | - | - |
| 683 | | | 371.1 | | Leased Flood Lighting | - | - | - |
| 684 | | | 373 | | Street Lighting and Signal Systems | - | - | - |
| 685 | | | 374 | | Asset Retirement Costs - Distribution | - | - | - |
| 686 | **Total Gross Plant Distribution Plant** | | | | | - | - | - |
| 687 | | | | | | | | |

| | A | B | C | D | E | V | W | X |
|---|---|---|---|---|---|---|---|---|
| 1 | **Public Service Company of New Mexico** | | | | | | | |
| 2 | **Schedule B-3** | | | | | | | |
| 3 | **Original Cost of Plant In Service by Monthly Balances** | | | | | | | |
| 4 | **Base Period Ending 6/30/2026** | | | | | | | |
| 5 | **Test Period Ending 9/30/2028** | | | | | | | |
| 6 | Link to WP Plant Lead Sheet | | | | | | | |
| 7 | | | | | | | | |
| 8 | **Base Period data is historical Information from the Company's Books and Records.** | | | | | | | |
| 9 | This schedule is sponsored by PNM Witness Gutierrez | | | | | | | |
| 10 | **Location** | **Location Number Note 6** | **FERC** | **Loc/ FERC** | **FERC Description** | **PV Lease Expiration Note 3** | **Shared Service Allocation Note 4** | **Total Base Period Adjustments Sum of Column S through Column W** |
| 688 | | | | | | | | |
| 689 | **Gross Plant G&I Plant (303,389-399)** | | | | | | | |
| 719 | **Total General & Intangible Plant** | | | | | | | |
| 720 | | | 303 | 303 | Miscellaneous Intangible Plant | - | - | - |
| 721 | | | 389 | 389 | Land and Land Rights | - | - | - |
| 722 | | | 390 | 390 | Structures and Improvements | - | - | - |
| 723 | | | 390.1 | 390.1 | Bulk Power Office Building Remodeling | - | - | - |
| 724 | | | 390.2 | 390.2 | Bulk Power Office Building | - | - | - |
| 725 | | | 391 | 391 | Office Furniture and Equipment | - | - | - |
| 726 | | | 391.1 | 391.1 | Office Furniture and Equipment - PC System | - | - | - |
| 727 | | | 391.2 | 391.2 | Office Furniture and Equipment - PC's | - | - | - |
| 728 | | | 391.3 | 391.3 | Computer Hardware | - | - | - |
| 729 | | | 391.5 | 391.5 | Computer Hardware - Solar | - | - | - |
| 730 | | | 391.7 | 391.7 | Computer Hardware | - | - | - |
| 731 | | | 392 | 392 | Transportation Equipment - Light | - | - | - |
| 732 | | | 392.1 | 392.1 | Transportation Equipment - Heavy | - | - | - |
| 733 | | | 392.2 | 392.2 | Transportation Equipment - Trailers | - | - | - |
| 734 | | | 392.4 | 392.4 | Transportation Equipment - Leaseback | - | - | - |
| 735 | | | 393 | 393 | Stores Equipment | - | - | - |
| 736 | | | 394 | 394 | Tools, Shop & Garage Equipment | - | - | - |
| 737 | | | 395 | 395 | Laboratory Equipment | - | - | - |
| 738 | | | 396 | 396 | Power Operated Equipment | - | - | - |
| 739 | | | 397.01 | 397.01 | Computer Hardware | - | - | - |
| 740 | | | 397.02 | 397.02 | Computer Software | - | - | - |
| 741 | | | 397.03 | 397.03 | Communication Equipment | - | - | - |
| 742 | | | 398 | 398 | Miscellaneous Equipment | - | - | - |
| 743 | | | 399.1 | 399.1 | ARO General Plant-1 | - | - | - |
| 744 | **Total Gross Plant G&I Plant - PNM** | | | | | - | - | - |
| 745 | | | | | | | | |
| 746 | **Total Electric Plant In Service** | | 101/106 | | | (1,042,150) | - | (91,822,421) |
| 747 | | | | | | | | |
| 748 | **Electric Plant Purchased** | | 102 | | | | | |
| 749 | | | | | | | | |
| 750 | **Electric Plant Acquisition Adjustment** | | | | Acq. Adj. - Palo Verde Unit 1&2 (Drexel) | | | - |
| 751 | | | | | Acq. Adj. - Palo Verde Unit 2 (First Chicago) | - | - | - |
| 752 | | | | | Acq. Adj. - (EIP) | - | - | - |
| 753 | **Electric Plant Acquisition Adjustment** | | 114 | | | - | - | - |
| 754 | | | | | | | | |
| 755 | **Total Electric Plant** | | | | | (1,042,150) | - | (91,822,421) |
| 756 | | | | | | | | |
| 757 | | | | | | | | |

| | A | B | C | D | E | V | W | X |
|---|---|---|---|---|---|---|---|---|
| 1 | **Public Service Company of New Mexico** | | | | | | | |
| 2 | **Schedule B-3** | | | | | | | |
| 3 | **Original Cost of Plant In Service by Monthly Balances** | | | | | | | |
| 4 | **Base Period Ending 6/30/2026** | | | | | | | |
| 5 | **Test Period Ending 9/30/2028** | | | | | | | |
| 6 | Link to WP Plant Lead Sheet | | | | | | | |
| 7 | | | | | | | | |
| 8 | **Base Period data is historical Information from the Company's Books and Records.** | | | | | | | |
| 9 | This schedule is sponsored by PNM Witness Gutierrez | | | | | | | |
| 10 | **Location** | **Location Number Note 6** | **FERC** | **Loc/ FERC** | **FERC Description** | **PV Lease Expiration Note 3** | **Shared Service Allocation Note 4** | **Total Base Period Adjustments Sum of Column S through Column W** |
| 758 | **Corporate Unallocated** | 900 | 303 | 900303 | Miscellaneous Intangible Plant | - | - | - |
| 759 | | 900 | 389 | 900389 | Land and Land Rights | - | (679,352) | (679,352) |
| 760 | | 900 | 390 | 900390 | Structures and Improvements | - | (17,992,451) | (17,992,451) |
| 761 | | 900 | 390.1 | 900390.1 | Bulk Power Office Building Remodeling | - | - | - |
| 762 | | 900 | 390.2 | 900390.2 | Bulk Power Office Building | - | - | - |
| 763 | | 900 | 391 | 900391 | Office Furniture and Equipment | - | (342,436) | (342,436) |
| 764 | | 900 | 391.1 | 900391.1 | Office Furniture and Equipment - PC System | - | - | - |
| 765 | | 900 | 391.2 | 900391.2 | Office Furniture and Equipment - PC's | - | - | - |
| 766 | | 900 | 391.3 | 900391.3 | Computer Hardware | - | - | - |
| 767 | | 900 | 391.5 | 900391.5 | Computer Hardware - Solar | - | - | - |
| 768 | | 900 | 391.7 | 900391.7 | Computer Hardware | - | - | - |
| 769 | | 900 | 392 | 900392 | Transportation Equipment - Light | - | (122,931) | (122,931) |
| 770 | | 900 | 392.1 | 900392.1 | Transportation Equipment - Heavy | - | (15,461) | (15,461) |
| 771 | | 900 | 392.2 | 900392.2 | Transportation Equipment - Trailers | - | (3,604) | (3,604) |
| 772 | | 900 | 392.4 | 900392.4 | Transportation Equipment - Leaseback | - | - | - |
| 773 | | 900 | 393 | 900393 | Stores Equipment | - | - | - |
| 774 | | 900 | 394 | 900394 | Tools, Shop & Garage Equipment | - | (201,183) | (201,183) |
| 775 | | 900 | 395 | 900395 | Laboratory Equipment | - | - | - |
| 776 | | 900 | 396 | 900396 | Power Operated Equipment | - | (7,723) | (7,723) |
| 777 | | 900 | 397 | 900397 | Communication Equipment | - | - | - |
| 778 | | 900 | 397.01 | 900397.01 | Computer Hardware | - | (11,621,094) | (11,621,094) |
| 779 | | 900 | 397.02 | 900397.02 | Computer Software | - | (61,733,900) | (61,733,900) |
| 780 | | 900 | 397.03 | 900397.03 | Communication Equipment | - | (1,788,737) | (1,788,737) |
| 781 | | 900 | 397.2 | 900397.2 | Communication Equipment | - | - | - |
| 782 | | 900 | 397.3 | 900397.3 | Communication Equipment | - | - | - |
| 783 | | 900 | 398 | 900398 | Miscellaneous Equipment | - | - | - |
| 784 | | 900 | 399.1 | 900399.1 | ARO General Plant-1 | - | - | - |
| 785 | | | | | | | | |
| 786 | **Total Corporate Unallocated** | | | | | - | (94,508,872) | (94,508,872) |
| 787 | | | | | | | | |
| 788 | **al Electric Plant In Service - with Corporate** | | 101/106 | | | (1,042,150) | (94,508,872) | (186,331,292) |
| 789 | | | | | | | | |
| 790 | **Electric Plant Purchased - with Corporate** | | 102 | | | | | |
| 791 | | | | | | | | |
| 792 | **Electric Plant Acq. Adj. - with Corporate** | | 114 | | | - | - | - |
| 793 | | | | | | | | |
| 794 | **Total Electric Plant - with Corporate** | | | | | (1,042,150) | (94,508,872) | (186,331,292) |

| | A | B | C | D | E | Y | Z | AA | AB |
|---|---|---|---|---|---|---|---|---|---|
| 1 | **Public Service Company of New Mexico** | | | | | | | | |
| 2 | **Schedule B-3** | | | | | | | | |
| 3 | **Original Cost of Plant In Service by Monthly Balances** | | | | | | | | |
| 4 | **Base Period Ending 6/30/2026** | | | | | | | | |
| 5 | **Test Period Ending 9/30/2028** | | | | | | | | |
| 6 | Link to WP Plant Lead Sheet | | | | | | | | |
| 7 | | | | | | | | | |
| 8 | **Base Period data is historical Information from the Company's Books and Records.** | | | | | | | | |
| 9 | This schedule is sponsored by PNM Witness Gutierrez | | | | | | | | |
| 10 | **Location** | **Location Number Note 6** | **FERC** | **Loc/ FERC** | **FERC Description** | **Adjusted Base Period Ending Balance 6/30/26 Column R + Column X** | **Reference** | **Linkage Beginning Balance 7/1/26** | **Balance 8/1/26** |
| 11 | | | | | | | | | |
| 12 | **Production Plant** | | | | | | | | |
| 13 | **Steam Production** | | | | | | | | |
| 56 | **All - Steam** | | | | | | | | |
| 57 | | | 310 | | Land and Land Rights | 618,487 | | 618,487 | 618,487 |
| 58 | | | 310.1 | | Land Right of Way | 22,368 | | 22,368 | 22,368 |
| 59 | | | 311 | | Structures & Improvements | 28,150,590 | | 28,150,590 | 29,192,557 |
| 60 | | | 312 | | Boiler Plant Equipment | 262,042,205 | | 262,042,205 | 262,824,538 |
| 61 | | | 314 | | Turbogenerator Units | 66,849,822 | | 66,849,822 | 67,491,360 |
| 62 | | | 315 | | Accessory Electric Equipment | 20,408,477 | | 20,408,477 | 20,447,840 |
| 63 | | | 315.01 | | Computer Hardware | - | | - | - |
| 64 | | | 315.02 | | Computer Software | 1,362,246 | | 1,362,246 | 1,362,246 |
| 65 | | | 315.03 | | Communication Equipment | 334,053 | | 334,053 | 334,053 |
| 66 | | | 316 | | Misc Power Plant Equipment | 28,137,322 | | 28,137,322 | 28,308,320 |
| 67 | | | 317 | | Asset Retirement Costs - Steam | 10,249,476 | | 10,249,476 | 10,249,476 |
| 68 | **Total Steam Production Gross Plant** | | | | | 418,175,045 | | 418,175,045 | 420,851,245 |
| 69 | | | | | | | | | |
| 70 | | | | | | | | | |
| 71 | **Nuclear Production** | | | | | | | | |
| 129 | **All - Nuclear** | | | | | | | | |
| 130 | | | 320 | | Land and Land Rights | 439,822 | | 439,822 | 439,822 |
| 131 | | | 320.1 | | Land - Right of Way | 44,622 | | 44,622 | 44,622 |
| 132 | | | 321 | | Structures and Improvements | 206,141,876 | | 206,141,876 | 206,281,069 |
| 133 | | | 322 | | Reactor Plant Equipment | 335,766,969 | | 335,766,969 | 336,401,490 |
| 134 | | | 323 | | Turbogenerator Units | 114,979,772 | | 114,979,772 | 114,938,119 |
| 135 | | | 324 | | Accessory Electric Equipment | 60,921,349 | | 60,921,349 | 60,911,633 |
| 136 | | | 324.01 | | Computer Hardware | - | | - | - |
| 137 | | | 324.02 | | Computer Software | 13,073,078 | | 13,073,078 | 13,140,132 |
| 138 | | | 324.03 | | Communication Equipment | 404,583 | | 404,583 | 415,758 |
| 139 | | | 325 | | Misc Power Plant Equipment | 71,030,834 | | 71,030,834 | 71,208,032 |
| 140 | | | 326 | | Asset Retirement Costs Nuclear Prod Plant | - | | - | - |
| 141 | **Total Nuclear Production Gross Plant** | | | | | 802,802,906 | | 802,802,906 | 803,780,678 |

| | A | B | C | D | E | Y | Z | AA | AB |
|---|---|---|---|---|---|---|---|---|---|
| 1 | **Public Service Company of New Mexico** | | | | | | | | |
| 2 | **Schedule B-3** | | | | | | | | |
| 3 | **Original Cost of Plant In Service by Monthly Balances** | | | | | | | | |
| 4 | **Base Period Ending 6/30/2026** | | | | | | | | |
| 5 | **Test Period Ending 9/30/2028** | | | | | | | | |
| 6 | Link to WP Plant Lead Sheet | | | | | | | | |
| 7 | | | | | | | | | |
| 8 | **Base Period data is historical Information from the Company's Books and Records.** | | | | | | | | |
| 9 | This schedule is sponsored by PNM Witness Gutierrez | | | | | | | | |
| 10 | **Location** | **Location Number Note 6** | **FERC** | **Loc/ FERC** | **FERC Description** | **Adjusted Base Period Ending Balance 6/30/26 Column R + Column X** | **Reference** | **Linkage Beginning Balance 7/1/26** | **Balance 8/1/26** |
| 142 | | | | | | | | | |
| 143 | | | | | | | | | |
| 144 | **Solar Production** | | | | | | | | |
| 237 | **All - Solar** | | | | | | | | |
| 238 | | | 338.01 | | Land & Land Rights | 11,040,948 | | 11,040,948 | 11,040,948 |
| 239 | | | 338.02 | | Structures and Improvements | 268,299 | | 268,299 | 268,299 |
| 240 | | | 338.04 | | Solar Panels | 277,545,592 | | 277,545,592 | 277,545,592 |
| 241 | | | 338.05 | | Collector System | 8,264,812 | | 8,264,812 | 8,264,812 |
| 242 | | | 338.07 | | Solar Inverters | - | | - | - |
| 243 | | | 338.08 | | Other Accessory Electrical Equipment | 33,903,100 | | 33,903,100 | 33,903,100 |
| 244 | | | 338.09 | | Computer Hardware | 51,760 | | 51,760 | 51,760 |
| 245 | | | 338.10 | | Computer Software | - | | - | - |
| 246 | | | 338.11 | | Communication Equipment | 637,577 | | 637,577 | 637,577 |
| 247 | | | 338.12 | | Misc. Power Plant Equipment | 5,228,178 | | 5,228,178 | 5,228,178 |
| 248 | **Total Solar Production Gross Plant** | | | | | 336,940,266 | | 336,940,266 | 336,940,266 |
| 249 | | | | | | | | | |
| 250 | **Other Production** | | | | | | | | |
| 251 | | | | | | | | | |
| 252 | **Other Production - Gas:** | | | | | | | | |
| 339 | **All - Gas** | | 340 | | Land and Land Rights | 7,079,884 | | 7,079,884 | 7,079,884 |
| 340 | | | 340.1 | | Land - Right of Way | 1,959,313 | | 1,959,313 | 1,959,313 |
| 341 | | | 341 | | Structures and Improvements | 95,355,528 | | 95,355,528 | 95,445,229 |
| 342 | | | 342 | | Fuel Holders, Producers, Accessories | 120,435,397 | | 120,435,397 | 120,458,433 |
| 343 | | | 343 | | Prime Movers | - | | - | - |
| 344 | | | 344 | | Generators | 257,177,775 | | 257,177,775 | 257,463,406 |
| 345 | | | 345 | | Accessory Electric Equipment | 24,125,557 | | 24,125,557 | 24,113,745 |
| 346 | | | 345.01 | | Computer Hardware | 53,885 | | 53,885 | 53,885 |
| 347 | | | 345.02 | | Computer Software | 60,931 | | 60,931 | 60,931 |
| 348 | | | 345.03 | | Communication Equipment | 38,862 | | 38,862 | 38,862 |
| 349 | | | 346 | | Misc Power Plant Equipment | 46,295,516 | | 46,295,516 | 46,343,095 |
| 350 | | | 347 | | Asset Retirement Costs - Other Production | 7,008,573 | | 7,008,573 | 7,008,573 |
| 351 | **Total Other Production Plant - Gas** | | | | | 559,591,222 | | 559,591,222 | 560,025,356 |
| 352 | | | | | | | | | |
| 353 | | | | | | | | | |
| 354 | **Total Other Production Gross Plant** | | | | | 559,591,222 | | 559,591,222 | 560,025,356 |
| 355 | | | | | | | | | |
| 356 | **Total Gross Plant Production** | | | | | 2,117,509,439 | | 2,117,509,439 | 2,121,597,546 |
| 357 | | | | | | | | | |
| 358 | | | | | | | | | |

| | A | B | C | D | E | Y | Z | AA | AB |
|---|---|---|---|---|---|---|---|---|---|
| 1 | **Public Service Company of New Mexico** | | | | | | | | |
| 2 | **Schedule B-3** | | | | | | | | |
| 3 | **Original Cost of Plant In Service by Monthly Balances** | | | | | | | | |
| 4 | **Base Period Ending 6/30/2026** | | | | | | | | |
| 5 | **Test Period Ending 9/30/2028** | | | | | | | | |
| 6 | Link to WP Plant Lead Sheet | | | | | | | | |
| 7 | | | | | | | | | |
| 8 | **Base Period data is historical Information from the Company's Books and Records.** | | | | | | | | |
| 9 | This schedule is sponsored by PNM Witness Gutierrez | | | | | | | | |
| 10 | **Location** | **Location Number Note 6** | **FERC** | **Loc/ FERC** | **FERC Description** | **Adjusted Base Period Ending Balance 6/30/26 Column R + Column X** | **Reference** | **Linkage Beginning Balance 7/1/26** | **Balance 8/1/26** |
| 359 | **Total Gross Energy Storage Plant** | | | | | | | | |
| 386 | **All - Energy Storage** | | 387.01 | 387.01 | Land & Land Rights | - | | - | - |
| 387 | | | 387.02 | 387.02 | Structures & Improvements | 23,176,806 | | 23,176,806 | 23,176,806 |
| 388 | | | 387.03 | 387.03 | Energy Storage Equipment | 33,059,123 | | 33,059,123 | 33,059,123 |
| 389 | | | 387.05 | 387.05 | Collector System | 25,624,069 | | 25,624,069 | 25,624,069 |
| 390 | | | 387.06 | 387.06 | Generator Step-Up Transformers (GSU) | 59,151,201 | | 59,151,201 | 59,151,201 |
| 391 | | | 387.07 | 387.07 | Inverters | - | | - | - |
| 392 | | | 387.08 | 387.08 | Computer Hardware | 5,348,140 | | 5,348,140 | 5,348,140 |
| 393 | | | 387.09 | 387.09 | Computer Software | 965,150 | | 965,150 | 965,150 |
| 394 | | | 387.10 | 387.10 | Communication Equipment | 1,233,478 | | 1,233,478 | 1,233,478 |
| 395 | | | 387.11 | 387.11 | Misc. Energy Storage Equipment | 7,837,251 | | 7,837,251 | 7,837,251 |
| 396 | | | 387.12 | 387.12 | Asset Retirement Costs for Energy Storage | - | | - | - |
| 397 | **Total Gross Energy Storage Plant** | | | | | 156,395,217 | | 156,395,217 | 156,395,217 |
| 398 | | | | | | | | | |
| 399 | | | | | | | | | |
| 400 | **Gross Plant Transmission Plant** | | | | | | | | |
| 401 | | | | | | | | | |
| 402 | | | | | | | | | |
| 453 | **All - Transmission** | | | | | | | | |
| 454 | | 650 | 350 | 650350 | Land and Land Rights | 81,554,885 | | 81,554,885 | 81,554,885 |
| 455 | | 650 | 350.1 | 650350.1 | Land - Right of Way | 53,100,094 | | 53,100,094 | 53,886,328 |
| 456 | | 650 | 351.01 | 650350.01 | Computer Hardware | 17,356,153 | | 17,356,153 | 17,568,815 |
| 457 | | 650 | 351.02 | 650350.02 | Computer Software | 9,284,877 | | 9,284,877 | 9,284,724 |
| 458 | | 650 | 351.03 | 650350.03 | Communication Equipment | 47,247,395 | | 47,247,395 | 47,673,264 |
| 459 | | 650 | 352 | 650352 | Structures and Improvements | 245,960,899 | | 245,960,899 | 247,702,237 |
| 460 | | 650 | 353 | 650353 | Station Equipment | 962,423,537 | | 962,423,537 | 967,640,134 |
| 461 | | 650 | 353.1 | 650353.1 | Station Equipment - Step-up Xfmr and Aux | 12,193,036 | | 12,193,036 | 12,224,798 |
| 462 | | 650 | 354 | 650354 | Towers and Fixtures | 64,316,194 | | 64,316,194 | 64,291,399 |
| 463 | | 650 | 355 | 650355 | Poles and Fixtures | 558,236,602 | | 558,236,602 | 558,886,621 |
| 464 | | 650 | 356 | 650356 | Overhead Conductors and Devices | 233,495,347 | | 233,495,347 | 233,733,676 |
| 465 | | 650 | 357 | 650357 | Underground Conduit | 185,394 | | 185,394 | 185,394 |
| 466 | | 650 | 359 | 650359 | Roads and Trails | 9,800,590 | | 9,800,590 | 9,800,494 |
| 467 | **Total Gross Plant Transmission Plant** | | | | | 2,295,155,005 | | 2,295,155,005 | 2,304,432,770 |
| 468 | | | | | | | | | |

| | A | B | C | D | E | Y | Z | AA | AB |
|---|---|---|---|---|---|---|---|---|---|
| 1 | **Public Service Company of New Mexico** | | | | | | | | |
| 2 | **Schedule B-3** | | | | | | | | |
| 3 | **Original Cost of Plant In Service by Monthly Balances** | | | | | | | | |
| 4 | **Base Period Ending 6/30/2026** | | | | | | | | |
| 5 | **Test Period Ending 9/30/2028** | | | | | | | | |
| 6 | Link to WP Plant Lead Sheet | | | | | | | | |
| 7 | | | | | | | | | |
| 8 | **Base Period data is historical Information from the Company's Books and Records.** | | | | | | | | |
| 9 | This schedule is sponsored by PNM Witness Gutierrez | | | | | | | | |
| 10 | **Location** | **Location Number Note 6** | **FERC** | **Loc/ FERC** | **FERC Description** | **Adjusted Base Period Ending Balance 6/30/26 Column R + Column X** | **Reference** | **Linkage Beginning Balance 7/1/26** | **Balance 8/1/26** |
| 469 | | | | | | | | | |
| 470 | | | | | | | | | |
| 471 | **Gross Plant Distribution Plant** | | | | | | | | |
| 665 | **All - Distribution** | | | | | | | | |
| 666 | | | 360 | | Land and Land Rights | 10,417,584 | | 10,417,584 | 10,458,862 |
| 667 | | | 360.1 | | Land - Right of Way | 2,121,278 | | 2,121,278 | 2,825,179 |
| 668 | | | 361 | | Structures and Improvements | 72,959,760 | | 72,959,760 | 73,154,144 |
| 669 | | | 362 | | Station Equipment | 331,313,566 | | 331,313,566 | 334,532,993 |
| 670 | | | 363.01 | | Computer Hardware | 7,679,772 | | 7,679,772 | 7,697,845 |
| 671 | | | 363.02 | | Computer Software | 52,092,734 | | 52,092,734 | 52,178,147 |
| 672 | | | 363.03 | | Communication Equipment | 18,438,804 | | 18,438,804 | 19,491,683 |
| 673 | | | 364 | | Poles, Towers and Fixtures | 470,868,364 | | 470,868,364 | 475,739,822 |
| 674 | | | 365 | | Overhead Conductors and Devices | 296,134,853 | | 296,134,853 | 302,664,864 |
| 675 | | | 366 | | Underground Conduit | 198,451,082 | | 198,451,082 | 200,520,342 |
| 676 | | | 367 | | Underground Conductors and Devices | 478,841,595 | | 478,841,595 | 482,041,407 |
| 677 | | | 368 | | Line Transformers | 292,030,680 | | 292,030,680 | 292,376,060 |
| 678 | | | 369 | | Services | 103,021,939 | | 103,021,939 | 104,389,797 |
| 679 | | | 369.1 | | Services - Underground | 178,879,452 | | 178,879,452 | 183,293,123 |
| 680 | | | 370 | | Meters Net Plant - PNM | 67,541,744 | | 67,541,744 | 67,610,787 |
| 681 | | | 370.4 | | Meters Net Plant - Grid Mod | 210,668 | | 210,668 | 307,963 |
| 682 | | | 371 | | Installations on Customers' Premises | 9,151,530 | | 9,151,530 | 9,151,530 |
| 683 | | | 371.1 | | Leased Flood Lighting | 307,353 | | 307,353 | 307,353 |
| 684 | | | 373 | | Street Lighting and Signal Systems | 31,058,860 | | 31,058,860 | 31,428,176 |
| 685 | | | 374 | | Asset Retirement Costs - Distribution | - | | - | - |
| 686 | **Total Gross Plant Distribution Plant** | | | | | 2,621,521,617 | | 2,621,521,617 | 2,650,170,076 |
| 687 | | | | | | | | | |

| | A | B | C | D | E | Y | Z | AA | AB |
|---|---|---|---|---|---|---|---|---|---|
| 1 | **Public Service Company of New Mexico** | | | | | | | | |
| 2 | **Schedule B-3** | | | | | | | | |
| 3 | **Original Cost of Plant In Service by Monthly Balances** | | | | | | | | |
| 4 | **Base Period Ending 6/30/2026** | | | | | | | | |
| 5 | **Test Period Ending 9/30/2028** | | | | | | | | |
| 6 | Link to WP Plant Lead Sheet | | | | | | | | |
| 7 | | | | | | | | | |
| 8 | **Base Period data is historical Information from the Company's Books and Records.** | | | | | | | | |
| 9 | This schedule is sponsored by PNM Witness Gutierrez | | | | | | | | |
| 10 | **Location** | **Location Number Note 6** | **FERC** | **Loc/ FERC** | **FERC Description** | **Adjusted Base Period Ending Balance 6/30/26 Column R + Column X** | **Reference** | **Linkage Beginning Balance 7/1/26** | **Balance 8/1/26** |
| 688 | | | | | | | | | |
| 689 | **Gross Plant G&I Plant (303,389-399)** | | | | | | | | |
| 719 | **Total General & Intangible Plant** | | | | | | | | |
| 720 | | | 303 | 303 | Miscellaneous Intangible Plant | - | | - | - |
| 721 | | | 389 | 389 | Land and Land Rights | 1,937,568 | | 1,937,568 | 1,937,568 |
| 722 | | | 390 | 390 | Structures and Improvements | 74,004,202 | | 74,004,202 | 74,022,491 |
| 723 | | | 390.1 | 390.1 | Bulk Power Office Building Remodeling | 5,904,067 | | 5,904,067 | 5,901,906 |
| 724 | | | 390.2 | 390.2 | Bulk Power Office Building | 5,945,142 | | 5,945,142 | 5,945,142 |
| 725 | | | 391 | 391 | Office Furniture and Equipment | 4,955,173 | | 4,955,173 | 4,957,955 |
| 726 | | | 391.1 | 391.1 | Office Furniture and Equipment - PC System | - | | - | - |
| 727 | | | 391.2 | 391.2 | Office Furniture and Equipment - PC's | - | | - | - |
| 728 | | | 391.3 | 391.3 | Computer Hardware | - | | - | - |
| 729 | | | 391.5 | 391.5 | Computer Hardware - Solar | - | | - | - |
| 730 | | | 391.7 | 391.7 | Computer Hardware | - | | - | - |
| 731 | | | 392 | 392 | Transportation Equipment - Light | 4,426,263 | | 4,426,263 | 4,425,450 |
| 732 | | | 392.1 | 392.1 | Transportation Equipment - Heavy | 5,035,647 | | 5,035,647 | 5,014,064 |
| 733 | | | 392.2 | 392.2 | Transportation Equipment - Trailers | 8,516,240 | | 8,516,240 | 8,515,966 |
| 734 | | | 392.4 | 392.4 | Transportation Equipment - Leaseback | - | | - | - |
| 735 | | | 393 | 393 | Stores Equipment | 97,939 | | 97,939 | 97,939 |
| 736 | | | 394 | 394 | Tools, Shop & Garage Equipment | 20,059,732 | | 20,059,732 | 20,120,125 |
| 737 | | | 395 | 395 | Laboratory Equipment | 206,265 | | 206,265 | 206,265 |
| 738 | | | 396 | 396 | Power Operated Equipment | 7,409,871 | | 7,409,871 | 7,413,394 |
| 739 | | | 397.01 | 397.01 | Computer Hardware | 2,386,424 | | 2,386,424 | 2,386,424 |
| 740 | | | 397.02 | 397.02 | Computer Software | 35,351,749 | | 35,351,749 | 33,012,853 |
| 741 | | | 397.03 | 397.03 | Communication Equipment | - | | - | - |
| 742 | | | 398 | 398 | Miscellaneous Equipment | 1,777,493 | | 1,777,493 | 1,779,179 |
| 743 | | | 399.1 | 399.1 | ARO General Plant-1 | 19,473 | | 19,473 | 19,473 |
| 744 | **Total Gross Plant G&I Plant - PNM** | | | | | 178,033,247 | | 178,033,247 | 175,756,194 |
| 745 | | | | | | | | | |
| 746 | **Total Electric Plant In Service** | | 101/106 | | | 7,368,614,526 | | 7,368,614,526 | 7,408,351,803 |
| 747 | | | | | | | | | |
| 748 | **Electric Plant Purchased** | | 102 | | | | | | |
| 749 | | | | | | | | | |
| 750 | **Electric Plant Acquisition Adjustment** | | | | Acq. Adj. - Palo Verde Unit 1&2 (Drexel) | - | | - | - |
| 751 | | | | | Acq. Adj. - Palo Verde Unit 2 (First Chicago) | 16,363,721 | | 16,363,721 | 16,294,383 |
| 752 | | | | | Acq. Adj. - (EIP) | - | | - | - |
| 753 | **Electric Plant Acquisition Adjustment** | | 114 | | | 16,363,721 | | 16,363,721 | 16,294,383 |
| 754 | | | | | | | | | |
| 755 | **Total Electric Plant** | | | | | 7,384,978,246 | | 7,384,978,246 | 7,424,646,186 |
| 756 | | | | | | | | | |
| 757 | | | | | | | | | |

| | A | B | C | D | E | Y | Z | AA | AB |
|---|---|---|---|---|---|---|---|---|---|
| 1 | **Public Service Company of New Mexico** | | | | | | | | |
| 2 | **Schedule B-3** | | | | | | | | |
| 3 | **Original Cost of Plant In Service by Monthly Balances** | | | | | | | | |
| 4 | **Base Period Ending 6/30/2026** | | | | | | | | |
| 5 | **Test Period Ending 9/30/2028** | | | | | | | | |
| 6 | Link to WP Plant Lead Sheet | | | | | | | | |
| 7 | | | | | | | | | |
| 8 | **Base Period data is historical Information from the Company's Books and Records.** | | | | | | | | |
| 9 | This schedule is sponsored by PNM Witness Gutierrez | | | | | | | | |
| 10 | **Location** | **Location Number Note 6** | **FERC** | **Loc/ FERC** | **FERC Description** | **Adjusted Base Period Ending Balance 6/30/26 Column R + Column X** | **Reference** | **Linkage Beginning Balance 7/1/26** | **Balance 8/1/26** |
| 758 | **Corporate Unallocated** | 900 | 303 | 900303 | Miscellaneous Intangible Plant | - | | - | - |
| 759 | | 900 | 389 | 900389 | Land and Land Rights | 4,453,975 | | 5,133,327 | 5,133,327 |
| 760 | | 900 | 390 | 900390 | Structures and Improvements | 54,041,491 | | 72,033,942 | 72,994,882 |
| 761 | | 900 | 390.1 | 900390.1 | Bulk Power Office Building Remodeling | - | | - | - |
| 762 | | 900 | 390.2 | 900390.2 | Bulk Power Office Building | - | | - | - |
| 763 | | 900 | 391 | 900391 | Office Furniture and Equipment | 673,678 | | 1,016,114 | 1,060,780 |
| 764 | | 900 | 391.1 | 900391.1 | Office Furniture and Equipment - PC System | - | | - | - |
| 765 | | 900 | 391.2 | 900391.2 | Office Furniture and Equipment - PC's | - | | - | - |
| 766 | | 900 | 391.3 | 900391.3 | Computer Hardware | - | | - | - |
| 767 | | 900 | 391.5 | 900391.5 | Computer Hardware - Solar | - | | - | - |
| 768 | | 900 | 391.7 | 900391.7 | Computer Hardware | - | | - | - |
| 769 | | 900 | 392 | 900392 | Transportation Equipment - Light | 227,399 | | 350,330 | 350,330 |
| 770 | | 900 | 392.1 | 900392.1 | Transportation Equipment - Heavy | 36,860 | | 52,320 | 52,320 |
| 771 | | 900 | 392.2 | 900392.2 | Transportation Equipment - Trailers | 6,668 | | 10,272 | 10,272 |
| 772 | | 900 | 392.4 | 900392.4 | Transportation Equipment - Leaseback | - | | - | (12) |
| 773 | | 900 | 393 | 900393 | Stores Equipment | - | | - | - |
| 774 | | 900 | 394 | 900394 | Tools, Shop & Garage Equipment | 391,085 | | 592,267 | 592,267 |
| 775 | | 900 | 395 | 900395 | Laboratory Equipment | - | | - | - |
| 776 | | 900 | 396 | 900396 | Power Operated Equipment | 18,412 | | 26,134 | 26,134 |
| 777 | | 900 | 397 | 900397 | Communication Equipment | - | | - | - |
| 778 | | 900 | 397.01 | 900397.01 | Computer Hardware | 26,646,288 | | 38,267,382 | 38,750,103 |
| 779 | | 900 | 397.02 | 900397.02 | Computer Software | 142,895,240 | | 204,629,139 | 206,716,023 |
| 780 | | 900 | 397.03 | 900397.03 | Communication Equipment | 3,308,833 | | 5,097,570 | 5,097,570 |
| 781 | | 900 | 397.2 | 900397.2 | Communication Equipment | - | | - | - |
| 782 | | 900 | 397.3 | 900397.3 | Communication Equipment | - | | - | - |
| 783 | | 900 | 398 | 900398 | Miscellaneous Equipment | - | | - | - |
| 784 | | 900 | 399.1 | 900399.1 | ARO General Plant-1 | - | | - | - |
| 785 | | | | | | | | | |
| 786 | **Total Corporate Unallocated** | | | | | 232,699,927 | | 327,208,799 | 330,783,997 |
| 787 | | | | | | | | | |
| 788 | **al Electric Plant In Service - with Corporate** | | 101/106 | | | 7,601,314,453 | | 7,695,823,324 | 7,739,135,800 |
| 790 | **Electric Plant Purchased - with Corporate** | | 102 | | | | | | |
| 792 | **Electric Plant Acq. Adj. - with Corporate** | | 114 | | | 16,363,721 | | 16,363,721 | 16,294,383 |
| 793 | | | | | | | | | |
| 794 | **Total Electric Plant - with Corporate** | | | | | 7,617,678,173 | | 7,712,187,045 | 7,755,430,183 |

| | A | B | C | D | E | AC | AD | AE | AF |
|---|---|---|---|---|---|---|---|---|---|
| 1 | **Public Service Company of New Mexico** | | | | | | | | |
| 2 | **Schedule B-3** | | | | | | | | |
| 3 | **Original Cost of Plant In Service by Monthly Balances** | | | | | | | | |
| 4 | **Base Period Ending 6/30/2026** | | | | | | | | |
| 5 | **Test Period Ending 9/30/2028** | | | | | | | | |
| 6 | Link to WP Plant Lead Sheet | | | | | | | | |
| 7 | | | | | | | | | |
| 8 | **Base Period data is historical Information from the Company's Books and Records.** | | | | | | | | |
| 9 | This schedule is sponsored by PNM Witness Gutierrez | | | | | | | | |
| 10 | **Location** | **Location Number Note 6** | **FERC** | **Loc/ FERC** | **FERC Description** | **Balance 9/1/26** | **Balance 10/1/26** | **Balance 11/1/26** | **Balance 12/1/26** |
| 11 | | | | | | | | | |
| 12 | **Production Plant** | | | | | | | | |
| 13 | **Steam Production** | | | | | | | | |
| 56 | **All - Steam** | | | | | | | | |
| 57 | | | 310 | | Land and Land Rights | 618,487 | 618,487 | 618,487 | 618,487 |
| 58 | | | 310.1 | | Land Right of Way | 22,368 | 22,368 | 22,368 | 22,368 |
| 59 | | | 311 | | Structures & Improvements | 29,275,141 | 29,322,927 | 29,390,598 | 29,503,252 |
| 60 | | | 312 | | Boiler Plant Equipment | 262,538,676 | 262,241,975 | 261,951,468 | 261,674,972 |
| 61 | | | 314 | | Turbogenerator Units | 67,481,709 | 67,464,642 | 67,451,812 | 67,448,569 |
| 62 | | | 315 | | Accessory Electric Equipment | 20,433,770 | 20,419,700 | 20,405,630 | 20,391,560 |
| 63 | | | 315.01 | | Computer Hardware | - | - | - | - |
| 64 | | | 315.02 | | Computer Software | 1,362,246 | 1,362,246 | 1,362,246 | 1,362,246 |
| 65 | | | 315.03 | | Communication Equipment | 334,053 | 334,053 | 334,053 | 334,053 |
| 66 | | | 316 | | Misc Power Plant Equipment | 28,265,588 | 28,222,856 | 28,180,124 | 28,137,392 |
| 67 | | | 317 | | Asset Retirement Costs - Steam | 10,249,476 | 10,249,476 | 10,249,476 | 10,249,476 |
| 68 | **Total Steam Production Gross Plant** | | | | | 420,581,513 | 420,258,729 | 419,966,262 | 419,742,375 |
| 69 | | | | | | | | | |
| 70 | | | | | | | | | |
| 71 | **Nuclear Production** | | | | | | | | |
| 129 | **All - Nuclear** | | | | | | | | |
| 130 | | | 320 | | Land and Land Rights | 439,822 | 439,822 | 439,822 | 439,822 |
| 131 | | | 320.1 | | Land - Right of Way | 44,622 | 44,622 | 44,622 | 44,622 |
| 132 | | | 321 | | Structures and Improvements | 206,370,435 | 206,434,526 | 206,649,627 | 206,666,430 |
| 133 | | | 322 | | Reactor Plant Equipment | 336,811,788 | 337,108,354 | 338,084,462 | 338,168,228 |
| 134 | | | 323 | | Turbogenerator Units | 114,896,466 | 114,854,813 | 114,813,160 | 114,771,507 |
| 135 | | | 324 | | Accessory Electric Equipment | 60,901,917 | 60,892,201 | 60,882,485 | 60,872,769 |
| 136 | | | 324.01 | | Computer Hardware | - | - | - | - |
| 137 | | | 324.02 | | Computer Software | 13,185,830 | 13,220,698 | 13,320,283 | 13,334,884 |
| 138 | | | 324.03 | | Communication Equipment | 423,375 | 429,186 | 445,783 | 448,217 |
| 139 | | | 325 | | Misc Power Plant Equipment | 71,328,285 | 71,419,653 | 71,683,603 | 71,720,927 |
| 140 | | | 326 | | Asset Retirement Costs Nuclear Prod Plant | - | - | - | - |
| 141 | **Total Nuclear Production Gross Plant** | | | | | 804,402,540 | 804,843,875 | 806,363,849 | 806,467,406 |

| | A | B | C | D | E | AC | AD | AE | AF |
|---|---|---|---|---|---|---|---|---|---|
| 1 | **Public Service Company of New Mexico** | | | | | | | | |
| 2 | **Schedule B-3** | | | | | | | | |
| 3 | **Original Cost of Plant In Service by Monthly Balances** | | | | | | | | |
| 4 | **Base Period Ending 6/30/2026** | | | | | | | | |
| 5 | **Test Period Ending 9/30/2028** | | | | | | | | |
| 6 | Link to WP Plant Lead Sheet | | | | | | | | |
| 7 | | | | | | | | | |
| 8 | **Base Period data is historical Information from the Company's Books and Records.** | | | | | | | | |
| 9 | This schedule is sponsored by PNM Witness Gutierrez | | | | | | | | |
| 10 | **Location** | **Location Number Note 6** | **FERC** | **Loc/ FERC** | **FERC Description** | **Balance 9/1/26** | **Balance 10/1/26** | **Balance 11/1/26** | **Balance 12/1/26** |
| 142 | | | | | | | | | |
| 143 | | | | | | | | | |
| 144 | **Solar Production** | | | | | | | | |
| 237 | **All - Solar** | | | | | | | | |
| 238 | | | 338.01 | | Land & Land Rights | 11,040,948 | 11,040,948 | 11,040,948 | 11,040,948 |
| 239 | | | 338.02 | | Structures and Improvements | 268,299 | 268,299 | 268,299 | 268,299 |
| 240 | | | 338.04 | | Solar Panels | 277,545,592 | 277,545,592 | 277,545,592 | 277,545,592 |
| 241 | | | 338.05 | | Collector System | 8,264,812 | 8,264,812 | 8,264,812 | 8,264,812 |
| 242 | | | 338.07 | | Solar Inverters | 10,127,593 | 10,127,593 | 10,127,593 | 10,127,593 |
| 243 | | | 338.08 | | Other Accessory Electrical Equipment | 23,775,507 | 23,775,507 | 23,775,507 | 23,775,507 |
| 244 | | | 338.09 | | Computer Hardware | 51,760 | 51,760 | 51,760 | 51,760 |
| 245 | | | 338.10 | | Computer Software | - | - | - | - |
| 246 | | | 338.11 | | Communication Equipment | 637,577 | 637,577 | 637,577 | 637,577 |
| 247 | | | 338.12 | | Misc. Power Plant Equipment | 5,228,178 | 5,228,178 | 5,228,178 | 5,228,178 |
| 248 | **Total Solar Production Gross Plant** | | | | | 336,940,266 | 336,940,266 | 336,940,266 | 336,940,266 |
| 249 | | | | | | | | | |
| 250 | **Other Production** | | | | | | | | |
| 251 | | | | | | | | | |
| 252 | **Other Production - Gas:** | | | | | | | | |
| 339 | **All - Gas** | | 340 | | Land and Land Rights | 7,079,884 | 7,079,884 | 7,079,884 | 7,079,884 |
| 340 | | | 340.1 | | Land - Right of Way | 1,959,313 | 1,959,313 | 1,959,313 | 1,959,313 |
| 341 | | | 341 | | Structures and Improvements | 95,407,400 | 95,369,571 | 95,331,742 | 95,409,949 |
| 342 | | | 342 | | Fuel Holders, Producers, Accessories | 124,891,962 | 124,884,045 | 124,876,128 | 124,940,105 |
| 343 | | | 343 | | Prime Movers | - | - | - | - |
| 344 | | | 344 | | Generators | 257,386,451 | 257,309,496 | 257,232,541 | 258,106,599 |
| 345 | | | 345 | | Accessory Electric Equipment | 24,079,824 | 24,045,903 | 24,011,982 | 25,131,282 |
| 346 | | | 345.01 | | Computer Hardware | 53,885 | 53,885 | 53,885 | 53,885 |
| 347 | | | 345.02 | | Computer Software | 60,931 | 60,931 | 60,931 | 60,931 |
| 348 | | | 345.03 | | Communication Equipment | 38,862 | 38,862 | 38,862 | 38,862 |
| 349 | | | 346 | | Misc Power Plant Equipment | 47,089,361 | 47,102,834 | 47,086,250 | 48,443,350 |
| 350 | | | 347 | | Asset Retirement Costs - Other Production | 7,008,573 | 7,008,573 | 7,008,573 | 7,008,573 |
| 351 | **Total Other Production Plant - Gas** | | | | | 565,056,447 | 564,913,298 | 564,740,093 | 568,232,734 |
| 352 | | | | | | | | | |
| 353 | | | | | | | | | |
| 354 | **Total Other Production Gross Plant** | | | | | 565,056,447 | 564,913,298 | 564,740,093 | 568,232,734 |
| 355 | | | | | | | | | |
| 356 | **Total Gross Plant Production** | | | | | 2,126,980,767 | 2,126,956,169 | 2,128,010,470 | 2,131,382,781 |
| 357 | | | | | | | | | |
| 358 | | | | | | | | | |

| | A | B | C | D | E | AC | AD | AE | AF |
|---|---|---|---|---|---|---|---|---|---|
| 1 | **Public Service Company of New Mexico** | | | | | | | | |
| 2 | **Schedule B-3** | | | | | | | | |
| 3 | **Original Cost of Plant In Service by Monthly Balances** | | | | | | | | |
| 4 | **Base Period Ending 6/30/2026** | | | | | | | | |
| 5 | **Test Period Ending 9/30/2028** | | | | | | | | |
| 6 | Link to WP Plant Lead Sheet | | | | | | | | |
| 7 | | | | | | | | | |
| 8 | **Base Period data is historical Information from the Company's Books and Records.** | | | | | | | | |
| 9 | This schedule is sponsored by PNM Witness Gutierrez | | | | | | | | |
| 10 | **Location** | **Location Number Note 6** | **FERC** | **Loc/ FERC** | **FERC Description** | **Balance 9/1/26** | **Balance 10/1/26** | **Balance 11/1/26** | **Balance 12/1/26** |
| 359 | **Total Gross Energy Storage Plant** | | | | | | | | |
| 386 | **All - Energy Storage** | | 387.01 | 387.01 | Land & Land Rights | - | - | - | - |
| 387 | | | 387.02 | 387.02 | Structures & Improvements | 23,176,806 | 23,176,806 | 23,176,806 | 23,176,806 |
| 388 | | | 387.03 | 387.03 | Energy Storage Equipment | 33,059,123 | 43,118,825 | 43,118,825 | 43,118,825 |
| 389 | | | 387.05 | 387.05 | Collector System | 25,624,069 | 25,624,069 | 25,624,069 | 25,624,069 |
| 390 | | | 387.06 | 387.06 | Generator Step-Up Transformers (GSU) | 59,151,201 | 59,151,201 | 59,151,201 | 59,151,201 |
| 391 | | | 387.07 | 387.07 | Inverters | - | - | - | - |
| 392 | | | 387.08 | 387.08 | Computer Hardware | 5,348,140 | 5,348,140 | 5,348,140 | 5,348,140 |
| 393 | | | 387.09 | 387.09 | Computer Software | 965,150 | 965,150 | 965,150 | 965,150 |
| 394 | | | 387.10 | 387.10 | Communication Equipment | 1,233,478 | 1,233,478 | 1,233,478 | 1,233,478 |
| 395 | | | 387.11 | 387.11 | Misc. Energy Storage Equipment | 7,837,251 | 7,837,251 | 7,837,251 | 7,837,251 |
| 396 | | | 387.12 | 387.12 | Asset Retirement Costs for Energy Storage | - | - | - | - |
| 397 | **Total Gross Energy Storage Plant** | | | | | 156,395,217 | 166,454,919 | 166,454,919 | 166,454,919 |
| 398 | | | | | | | | | |
| 399 | | | | | | | | | |
| 400 | **Gross Plant Transmission Plant** | | | | | | | | |
| 401 | | | | | | | | | |
| 402 | | | | | | | | | |
| 453 | **All - Transmission** | | | | | | | | |
| 454 | | 650 | 350 | 650350 | Land and Land Rights | 81,580,571 | 81,620,770 | 81,620,770 | 81,620,770 |
| 455 | | 650 | 350.1 | 650350.1 | Land - Right of Way | 53,886,328 | 53,886,328 | 53,886,328 | 53,886,328 |
| 456 | | 650 | 351.01 | 650350.01 | Computer Hardware | 17,667,274 | 17,710,109 | 17,758,289 | 17,854,779 |
| 457 | | 650 | 351.02 | 650350.02 | Computer Software | 9,284,724 | 9,284,724 | 9,284,724 | 9,284,724 |
| 458 | | 650 | 351.03 | 650350.03 | Communication Equipment | 47,870,182 | 47,955,852 | 48,052,212 | 48,245,192 |
| 459 | | 650 | 352 | 650352 | Structures and Improvements | 248,497,618 | 248,834,102 | 249,214,683 | 249,993,822 |
| 460 | | 650 | 353 | 650353 | Station Equipment | 969,723,890 | 971,112,839 | 973,411,219 | 974,218,625 |
| 461 | | 650 | 353.1 | 650353.1 | Station Equipment - Step-up Xfmr and Aux | 12,220,938 | 12,217,078 | 12,213,218 | 12,209,358 |
| 462 | | 650 | 354 | 650354 | Towers and Fixtures | 64,266,604 | 64,241,809 | 64,406,706 | 64,381,911 |
| 463 | | 650 | 355 | 650355 | Poles and Fixtures | 558,966,972 | 559,070,073 | 559,215,845 | 559,292,258 |
| 464 | | 650 | 356 | 650356 | Overhead Conductors and Devices | 233,815,406 | 233,841,512 | 233,872,963 | 233,952,724 |
| 465 | | 650 | 357 | 650357 | Underground Conduit | 185,394 | 185,394 | 185,394 | 185,394 |
| 466 | | 650 | 359 | 650359 | Roads and Trails | 9,800,398 | 9,800,302 | 9,800,206 | 9,800,110 |
| 467 | **Total Gross Plant Transmission Plant** | | | | | 2,307,766,300 | 2,309,760,892 | 2,312,922,557 | 2,314,925,995 |
| 468 | | | | | | | | | |

| | A | B | C | D | E | AC | AD | AE | AF |
|---|---|---|---|---|---|---|---|---|---|
| 1 | **Public Service Company of New Mexico** | | | | | | | | |
| 2 | **Schedule B-3** | | | | | | | | |
| 3 | **Original Cost of Plant In Service by Monthly Balances** | | | | | | | | |
| 4 | **Base Period Ending 6/30/2026** | | | | | | | | |
| 5 | **Test Period Ending 9/30/2028** | | | | | | | | |
| 6 | Link to WP Plant Lead Sheet | | | | | | | | |
| 7 | | | | | | | | | |
| 8 | **Base Period data is historical Information from the Company's Books and Records.** | | | | | | | | |
| 9 | This schedule is sponsored by PNM Witness Gutierrez | | | | | | | | |
| 10 | **Location** | **Location Number Note 6** | **FERC** | **Loc/ FERC** | **FERC Description** | **Balance 9/1/26** | **Balance 10/1/26** | **Balance 11/1/26** | **Balance 12/1/26** |
| 469 | | | | | | | | | |
| 470 | | | | | | | | | |
| 471 | **Gross Plant Distribution Plant** | | | | | | | | |
| 665 | **All - Distribution** | | | | | | | | |
| 666 | | | 360 | | Land and Land Rights | 10,458,901 | 10,458,901 | 10,482,879 | 10,482,879 |
| 667 | | | 360.1 | | Land - Right of Way | 2,839,254 | 2,917,202 | 3,026,616 | 3,026,616 |
| 668 | | | 361 | | Structures and Improvements | 73,622,949 | 73,767,626 | 74,051,993 | 74,057,935 |
| 669 | | | 362 | | Station Equipment | 338,303,244 | 339,237,410 | 342,768,715 | 343,009,755 |
| 670 | | | 363.01 | | Computer Hardware | 8,240,831 | 8,431,810 | 9,461,848 | 9,769,279 |
| 671 | | | 363.02 | | Computer Software | 53,582,787 | 54,155,723 | 57,245,837 | 58,168,130 |
| 672 | | | 363.03 | | Communication Equipment | 19,712,245 | 21,659,662 | 23,527,167 | 23,591,638 |
| 673 | | | 364 | | Poles, Towers and Fixtures | 478,659,971 | 482,065,536 | 486,393,052 | 489,563,446 |
| 674 | | | 365 | | Overhead Conductors and Devices | 304,905,383 | 308,968,672 | 313,988,402 | 315,607,688 |
| 675 | | | 366 | | Underground Conduit | 201,660,642 | 202,516,945 | 203,349,536 | 204,037,278 |
| 676 | | | 367 | | Underground Conductors and Devices | 485,050,089 | 486,479,606 | 488,650,707 | 489,617,465 |
| 677 | | | 368 | | Line Transformers | 293,210,104 | 294,004,221 | 294,754,422 | 295,450,824 |
| 678 | | | 369 | | Services | 104,358,647 | 104,327,497 | 105,874,716 | 105,843,566 |
| 679 | | | 369.1 | | Services - Underground | 183,276,604 | 183,260,085 | 188,241,735 | 188,225,216 |
| 680 | | | 370 | | Meters Net Plant - PNM | 67,757,262 | 67,942,944 | 68,235,308 | 68,398,580 |
| 681 | | | 370.4 | | Meters Net Plant - Grid Mod | 1,547,002 | 2,692,873 | 8,873,102 | 10,717,688 |
| 682 | | | 371 | | Installations on Customers' Premises | 9,151,530 | 9,151,530 | 9,151,530 | 9,151,530 |
| 683 | | | 371.1 | | Leased Flood Lighting | 307,353 | 307,353 | 307,353 | 307,353 |
| 684 | | | 373 | | Street Lighting and Signal Systems | 31,689,459 | 31,900,820 | 32,178,645 | 32,478,124 |
| 685 | | | 374 | | Asset Retirement Costs - Distribution | - | - | - | - |
| 686 | **Total Gross Plant Distribution Plant** | | | | | 2,668,334,256 | 2,684,246,414 | 2,720,563,559 | 2,731,504,987 |
| 687 | | | | | | | | | |

| | A | B | C | D | E | AC | AD | AE | AF |
|---|---|---|---|---|---|---|---|---|---|
| 1 | **Public Service Company of New Mexico** | | | | | | | | |
| 2 | **Schedule B-3** | | | | | | | | |
| 3 | **Original Cost of Plant In Service by Monthly Balances** | | | | | | | | |
| 4 | **Base Period Ending 6/30/2026** | | | | | | | | |
| 5 | **Test Period Ending 9/30/2028** | | | | | | | | |
| 6 | Link to WP Plant Lead Sheet | | | | | | | | |
| 7 | | | | | | | | | |
| 8 | **Base Period data is historical Information from the Company's Books and Records.** | | | | | | | | |
| 9 | This schedule is sponsored by PNM Witness Gutierrez | | | | | | | | |
| 10 | **Location** | **Location Number Note 6** | **FERC** | **Loc/ FERC** | **FERC Description** | **Balance 9/1/26** | **Balance 10/1/26** | **Balance 11/1/26** | **Balance 12/1/26** |
| 688 | | | | | | | | | |
| 689 | **Gross Plant G&I Plant (303,389-399)** | | | | | | | | |
| 719 | **Total General & Intangible Plant** | | | | | | | | |
| 720 | | | 303 | 303 | Miscellaneous Intangible Plant | - | - | - | - |
| 721 | | | 389 | 389 | Land and Land Rights | 1,937,568 | 1,937,568 | 1,937,568 | 1,937,568 |
| 722 | | | 390 | 390 | Structures and Improvements | 74,075,344 | 74,064,560 | 74,032,477 | 74,000,394 |
| 723 | | | 390.1 | 390.1 | Bulk Power Office Building Remodeling | 5,899,745 | 5,898,069 | 5,895,908 | 5,893,747 |
| 724 | | | 390.2 | 390.2 | Bulk Power Office Building | 5,945,142 | 5,945,142 | 5,945,142 | 5,945,142 |
| 725 | | | 391 | 391 | Office Furniture and Equipment | 4,958,991 | 4,965,747 | 5,081,745 | 5,081,745 |
| 726 | | | 391.1 | 391.1 | Office Furniture and Equipment - PC System | - | - | - | - |
| 727 | | | 391.2 | 391.2 | Office Furniture and Equipment - PC's | - | - | - | - |
| 728 | | | 391.3 | 391.3 | Computer Hardware | - | - | - | - |
| 729 | | | 391.5 | 391.5 | Computer Hardware - Solar | - | - | - | - |
| 730 | | | 391.7 | 391.7 | Computer Hardware | - | - | - | - |
| 731 | | | 392 | 392 | Transportation Equipment - Light | 4,446,246 | 4,444,379 | 4,441,581 | 4,478,324 |
| 732 | | | 392.1 | 392.1 | Transportation Equipment - Heavy | 4,992,481 | 4,970,898 | 4,949,315 | 4,927,732 |
| 733 | | | 392.2 | 392.2 | Transportation Equipment - Trailers | 8,515,692 | 8,515,418 | 8,515,144 | 8,514,870 |
| 734 | | | 392.4 | 392.4 | Transportation Equipment - Leaseback | - | - | - | - |
| 735 | | | 393 | 393 | Stores Equipment | 97,939 | 97,939 | 97,939 | 97,939 |
| 736 | | | 394 | 394 | Tools, Shop & Garage Equipment | 20,123,232 | 20,412,530 | 20,527,675 | 20,527,675 |
| 737 | | | 395 | 395 | Laboratory Equipment | 206,265 | 206,265 | 206,265 | 206,265 |
| 738 | | | 396 | 396 | Power Operated Equipment | 7,413,124 | 7,423,830 | 7,432,145 | 7,431,875 |
| 739 | | | 397.01 | 397.01 | Computer Hardware | 2,386,424 | 2,390,134 | 2,390,134 | 2,390,134 |
| 740 | | | 397.02 | 397.02 | Computer Software | 33,012,853 | 33,256,735 | 33,256,735 | 33,256,735 |
| 741 | | | 397.03 | 397.03 | Communication Equipment | - | - | - | - |
| 742 | | | 398 | 398 | Miscellaneous Equipment | 1,779,179 | 1,779,179 | 1,779,179 | 1,779,179 |
| 743 | | | 399.1 | 399.1 | ARO General Plant-1 | 19,473 | 19,473 | 19,473 | 19,473 |
| 744 | **Total Gross Plant G&I Plant - PNM** | | | | | 175,809,698 | 176,327,864 | 176,508,424 | 176,488,796 |
| 745 | | | | | | | | | |
| 746 | **Total Electric Plant In Service** | | 101/106 | | | 7,435,286,238 | 7,463,746,258 | 7,504,459,929 | 7,520,757,478 |
| 747 | | | | | | | | | |
| 748 | **Electric Plant Purchased** | | 102 | | | | | | |
| 749 | | | | | | | | | |
| 750 | **Electric Plant Acquisition Adjustment** | | | | Acq. Adj. - Palo Verde Unit 1&2 (Drexel) | - | - | - | - |
| 751 | | | | | Acq. Adj. - Palo Verde Unit 2 (First Chicago) | 16,225,045 | 16,155,707 | 16,086,370 | 16,017,032 |
| 752 | | | | | Acq. Adj. - (EIP) | - | - | - | - |
| 753 | **Electric Plant Acquisition Adjustment** | | 114 | | | 16,225,045 | 16,155,707 | 16,086,370 | 16,017,032 |
| 754 | | | | | | | | | |
| 755 | **Total Electric Plant** | | | | | 7,451,511,283 | 7,479,901,966 | 7,520,546,299 | 7,536,774,510 |
| 756 | | | | | | | | | |
| 757 | | | | | | | | | |

| | A | B | C | D | E | AC | AD | AE | AF |
|---|---|---|---|---|---|---|---|---|---|
| 1 | **Public Service Company of New Mexico** | | | | | | | | |
| 2 | **Schedule B-3** | | | | | | | | |
| 3 | **Original Cost of Plant In Service by Monthly Balances** | | | | | | | | |
| 4 | **Base Period Ending 6/30/2026** | | | | | | | | |
| 5 | **Test Period Ending 9/30/2028** | | | | | | | | |
| 6 | Link to WP Plant Lead Sheet | | | | | | | | |
| 7 | | | | | | | | | |
| 8 | **Base Period data is historical Information from the Company's Books and Records.** | | | | | | | | |
| 9 | This schedule is sponsored by PNM Witness Gutierrez | | | | | | | | |
| 10 | **Location** | **Location Number Note 6** | **FERC** | **Loc/ FERC** | **FERC Description** | **Balance 9/1/26** | **Balance 10/1/26** | **Balance 11/1/26** | **Balance 12/1/26** |
| 758 | **Corporate Unallocated** | 900 | 303 | 900303 | Miscellaneous Intangible Plant | - | - | - | - |
| 759 | | 900 | 389 | 900389 | Land and Land Rights | 5,133,327 | 5,133,327 | 5,133,327 | 5,133,327 |
| 760 | | 900 | 390 | 900390 | Structures and Improvements | 73,591,968 | 73,546,632 | 74,752,500 | 75,732,553 |
| 761 | | 900 | 390.1 | 900390.1 | Bulk Power Office Building Remodeling | - | - | - | - |
| 762 | | 900 | 390.2 | 900390.2 | Bulk Power Office Building | - | - | - | - |
| 763 | | 900 | 391 | 900391 | Office Furniture and Equipment | 1,075,006 | 1,119,007 | 1,158,833 | 1,180,195 |
| 764 | | 900 | 391.1 | 900391.1 | Office Furniture and Equipment - PC System | - | - | - | - |
| 765 | | 900 | 391.2 | 900391.2 | Office Furniture and Equipment - PC's | - | - | - | - |
| 766 | | 900 | 391.3 | 900391.3 | Computer Hardware | - | - | - | - |
| 767 | | 900 | 391.5 | 900391.5 | Computer Hardware - Solar | - | - | - | - |
| 768 | | 900 | 391.7 | 900391.7 | Computer Hardware | - | - | - | - |
| 769 | | 900 | 392 | 900392 | Transportation Equipment - Light | 350,330 | 350,330 | 350,330 | 350,330 |
| 770 | | 900 | 392.1 | 900392.1 | Transportation Equipment - Heavy | 52,320 | 52,320 | 52,320 | 52,320 |
| 771 | | 900 | 392.2 | 900392.2 | Transportation Equipment - Trailers | 10,272 | 10,272 | 10,272 | 10,272 |
| 772 | | 900 | 392.4 | 900392.4 | Transportation Equipment - Leaseback | (24) | (36) | (48) | (60) |
| 773 | | 900 | 393 | 900393 | Stores Equipment | - | - | - | - |
| 774 | | 900 | 394 | 900394 | Tools, Shop & Garage Equipment | 592,267 | 592,267 | 592,267 | 592,267 |
| 775 | | 900 | 395 | 900395 | Laboratory Equipment | - | - | - | - |
| 776 | | 900 | 396 | 900396 | Power Operated Equipment | 26,134 | 26,134 | 26,134 | 26,134 |
| 777 | | 900 | 397 | 900397 | Communication Equipment | - | - | - | - |
| 778 | | 900 | 397.01 | 900397.01 | Computer Hardware | 38,779,491 | 39,615,494 | 39,886,915 | 39,908,277 |
| 779 | | 900 | 397.02 | 900397.02 | Computer Software | 206,783,408 | 210,303,419 | 211,404,165 | 211,404,165 |
| 780 | | 900 | 397.03 | 900397.03 | Communication Equipment | 5,097,570 | 5,097,570 | 5,097,570 | 5,097,570 |
| 781 | | 900 | 397.2 | 900397.2 | Communication Equipment | - | - | - | - |
| 782 | | 900 | 397.3 | 900397.3 | Communication Equipment | - | - | - | - |
| 783 | | 900 | 398 | 900398 | Miscellaneous Equipment | - | - | - | - |
| 784 | | 900 | 399.1 | 900399.1 | ARO General Plant-1 | - | - | - | - |
| 785 | | | | | | | | | |
| 786 | **Total Corporate Unallocated** | | | | | 331,492,071 | 335,846,737 | 338,464,587 | 339,487,352 |
| 787 | | | | | | | | | |
| 788 | **al Electric Plant In Service - with Corporate** | | 101/106 | | | 7,766,778,309 | 7,799,592,995 | 7,842,924,516 | 7,860,244,830 |
| 790 | **Electric Plant Purchased - with Corporate** | | 102 | | | | | | |
| 792 | **Electric Plant Acq. Adj. - with Corporate** | | 114 | | | 16,225,045 | 16,155,707 | 16,086,370 | 16,017,032 |
| 793 | | | | | | | | | |
| 794 | **Total Electric Plant - with Corporate** | | | | | 7,783,003,354 | 7,815,748,703 | 7,859,010,886 | 7,876,261,862 |

| | A | B | C | D | E | AG | AH | AI | AJ |
|---|---|---|---|---|---|---|---|---|---|
| 1 | **Public Service Company of New Mexico** | | | | | | | | |
| 2 | **Schedule B-3** | | | | | | | | |
| 3 | **Original Cost of Plant In Service by Monthly Balances** | | | | | | | | |
| 4 | **Base Period Ending 6/30/2026** | | | | | | | | |
| 5 | **Test Period Ending 9/30/2028** | | | | | | | | |
| 6 | Link to WP Plant Lead Sheet | | | | | | | | |
| 7 | | | | | | | | | |
| 8 | **Base Period data is historical Information from the Company's Books and Records.** | | | | | | | | |
| 9 | This schedule is sponsored by PNM Witness Gutierrez | | | | | | | | |
| 10 | **Location** | **Location Number Note 6** | **FERC** | **Loc/ FERC** | **FERC Description** | **Balance 1/1/27** | **Balance 2/1/27** | **Balance 3/1/27** | **Balance 4/1/27** |
| 11 | | | | | | | | | |
| 12 | **Production Plant** | | | | | | | | |
| 13 | **Steam Production** | | | | | | | | |
| 56 | **All - Steam** | | | | | | | | |
| 57 | | | 310 | | Land and Land Rights | 618,487 | 618,487 | 618,487 | 618,487 |
| 58 | | | 310.1 | | Land Right of Way | 22,368 | 22,368 | 22,368 | 22,368 |
| 59 | | | 311 | | Structures & Improvements | 30,798,260 | 30,801,124 | 30,804,499 | 31,004,031 |
| 60 | | | 312 | | Boiler Plant Equipment | 261,766,751 | 261,456,058 | 261,145,524 | 261,819,881 |
| 61 | | | 314 | | Turbogenerator Units | 67,697,303 | 67,670,662 | 67,644,130 | 68,195,797 |
| 62 | | | 315 | | Accessory Electric Equipment | 20,377,490 | 20,363,420 | 20,349,350 | 20,399,437 |
| 63 | | | 315.01 | | Computer Hardware | - | - | - | - |
| 64 | | | 315.02 | | Computer Software | 1,362,246 | 1,362,246 | 1,362,246 | 1,362,246 |
| 65 | | | 315.03 | | Communication Equipment | 334,053 | 334,053 | 334,053 | 334,053 |
| 66 | | | 316 | | Misc Power Plant Equipment | 28,094,660 | 28,051,928 | 28,009,196 | 28,223,093 |
| 67 | | | 317 | | Asset Retirement Costs - Steam | 10,249,476 | 10,249,476 | 10,249,476 | 10,249,476 |
| 68 | **Total Steam Production Gross Plant** | | | | | 421,321,093 | 420,929,821 | 420,539,328 | 422,228,868 |
| 69 | | | | | | | | | |
| 70 | | | | | | | | | |
| 71 | **Nuclear Production** | | | | | | | | |
| 129 | **All - Nuclear** | | | | | | | | |
| 130 | | | 320 | | Land and Land Rights | 439,822 | 439,822 | 439,822 | 439,822 |
| 131 | | | 320.1 | | Land - Right of Way | 44,622 | 44,622 | 44,622 | 44,622 |
| 132 | | | 321 | | Structures and Improvements | 206,883,443 | 207,129,309 | 207,210,268 | 207,196,455 |
| 133 | | | 322 | | Reactor Plant Equipment | 339,152,940 | 340,267,490 | 340,639,960 | 340,585,956 |
| 134 | | | 323 | | Turbogenerator Units | 114,729,854 | 114,688,201 | 114,646,548 | 114,604,895 |
| 135 | | | 324 | | Accessory Electric Equipment | 60,863,053 | 60,853,337 | 60,843,621 | 60,833,905 |
| 136 | | | 324.01 | | Computer Hardware | - | - | - | - |
| 137 | | | 324.02 | | Computer Software | 13,435,288 | 13,548,059 | 13,590,155 | 13,591,634 |
| 138 | | | 324.03 | | Communication Equipment | 464,951 | 483,746 | 490,762 | 491,009 |
| 139 | | | 325 | | Misc Power Plant Equipment | 71,987,062 | 72,286,172 | 72,396,817 | 72,399,152 |
| 140 | | | 326 | | Asset Retirement Costs Nuclear Prod Plant | - | - | - | - |
| 141 | **Total Nuclear Production Gross Plant** | | | | | 808,001,035 | 809,740,757 | 810,302,576 | 810,187,450 |

| | A | B | C | D | E | AG | AH | AI | AJ |
|---|---|---|---|---|---|---|---|---|---|
| 1 | **Public Service Company of New Mexico** | | | | | | | | |
| 2 | **Schedule B-3** | | | | | | | | |
| 3 | **Original Cost of Plant In Service by Monthly Balances** | | | | | | | | |
| 4 | **Base Period Ending 6/30/2026** | | | | | | | | |
| 5 | **Test Period Ending 9/30/2028** | | | | | | | | |
| 6 | Link to WP Plant Lead Sheet | | | | | | | | |
| 7 | | | | | | | | | |
| 8 | **Base Period data is historical Information from the Company's Books and Records.** | | | | | | | | |
| 9 | This schedule is sponsored by PNM Witness Gutierrez | | | | | | | | |
| 10 | **Location** | **Location Number Note 6** | **FERC** | **Loc/ FERC** | **FERC Description** | **Balance 1/1/27** | **Balance 2/1/27** | **Balance 3/1/27** | **Balance 4/1/27** |
| 142 | | | | | | | | | |
| 143 | | | | | | | | | |
| 144 | **Solar Production** | | | | | | | | |
| 237 | **All - Solar** | | | | | | | | |
| 238 | | | 338.01 | | Land & Land Rights | 11,040,948 | 11,040,948 | 11,040,948 | 11,040,948 |
| 239 | | | 338.02 | | Structures and Improvements | 268,299 | 268,299 | 268,299 | 268,299 |
| 240 | | | 338.04 | | Solar Panels | 277,545,592 | 277,545,592 | 277,545,592 | 277,545,592 |
| 241 | | | 338.05 | | Collector System | 8,264,812 | 8,264,812 | 8,264,812 | 8,264,812 |
| 242 | | | 338.07 | | Solar Inverters | 10,127,593 | 10,127,593 | 10,127,593 | 10,127,593 |
| 243 | | | 338.08 | | Other Accessory Electrical Equipment | 23,775,507 | 23,775,507 | 23,775,507 | 23,775,507 |
| 244 | | | 338.09 | | Computer Hardware | 51,760 | 51,760 | 51,760 | 51,760 |
| 245 | | | 338.10 | | Computer Software | - | - | - | - |
| 246 | | | 338.11 | | Communication Equipment | 637,577 | 637,577 | 637,577 | 637,577 |
| 247 | | | 338.12 | | Misc. Power Plant Equipment | 5,228,178 | 5,228,178 | 5,228,178 | 5,228,178 |
| 248 | **Total Solar Production Gross Plant** | | | | | 336,940,266 | 336,940,266 | 336,940,266 | 336,940,266 |
| 249 | | | | | | | | | |
| 250 | **Other Production** | | | | | | | | |
| 251 | | | | | | | | | |
| 252 | **Other Production - Gas:** | | | | | | | | |
| 339 | **All - Gas** | | 340 | | Land and Land Rights | 7,079,884 | 7,079,884 | 7,079,884 | 7,079,884 |
| 340 | | | 340.1 | | Land - Right of Way | 1,959,313 | 1,959,313 | 1,959,313 | 1,959,313 |
| 341 | | | 341 | | Structures and Improvements | 95,517,005 | 95,479,176 | 95,441,347 | 95,436,364 |
| 342 | | | 342 | | Fuel Holders, Producers, Accessories | 126,572,929 | 126,565,012 | 128,874,930 | 129,025,619 |
| 343 | | | 343 | | Prime Movers | - | - | - | - |
| 344 | | | 344 | | Generators | 259,601,671 | 259,524,716 | 259,447,761 | 261,157,879 |
| 345 | | | 345 | | Accessory Electric Equipment | 26,762,074 | 26,728,153 | 26,694,232 | 26,732,790 |
| 346 | | | 345.01 | | Computer Hardware | 53,885 | 53,885 | 53,885 | 53,885 |
| 347 | | | 345.02 | | Computer Software | 60,931 | 60,931 | 60,931 | 60,931 |
| 348 | | | 345.03 | | Communication Equipment | 38,862 | 38,862 | 38,862 | 38,862 |
| 349 | | | 346 | | Misc Power Plant Equipment | 48,563,667 | 48,546,375 | 48,529,083 | 48,526,488 |
| 350 | | | 347 | | Asset Retirement Costs - Other Production | 7,008,573 | 7,008,573 | 7,008,573 | 7,008,573 |
| 351 | **Total Other Production Plant - Gas** | | | | | 573,218,794 | 573,044,880 | 575,188,801 | 577,080,588 |
| 352 | | | | | | | | | |
| 353 | | | | | | | | | |
| 354 | **Total Other Production Gross Plant** | | | | | 573,218,794 | 573,044,880 | 575,188,801 | 577,080,588 |
| 355 | | | | | | | | | |
| 356 | **Total Gross Plant Production** | | | | | 2,139,481,189 | 2,140,655,725 | 2,142,970,971 | 2,146,437,173 |
| 357 | | | | | | | | | |
| 358 | | | | | | | | | |

| | A | B | C | D | E | AG | AH | AI | AJ |
|---|---|---|---|---|---|---|---|---|---|
| 1 | **Public Service Company of New Mexico** | | | | | | | | |
| 2 | **Schedule B-3** | | | | | | | | |
| 3 | **Original Cost of Plant In Service by Monthly Balances** | | | | | | | | |
| 4 | **Base Period Ending 6/30/2026** | | | | | | | | |
| 5 | **Test Period Ending 9/30/2028** | | | | | | | | |
| 6 | Link to WP Plant Lead Sheet | | | | | | | | |
| 7 | | | | | | | | | |
| 8 | **Base Period data is historical Information from the Company's Books and Records.** | | | | | | | | |
| 9 | This schedule is sponsored by PNM Witness Gutierrez | | | | | | | | |
| 10 | **Location** | **Location Number Note 6** | **FERC** | **Loc/ FERC** | **FERC Description** | **Balance 1/1/27** | **Balance 2/1/27** | **Balance 3/1/27** | **Balance 4/1/27** |
| 359 | **Total Gross Energy Storage Plant** | | | | | | | | |
| 386 | **All - Energy Storage** | | 387.01 | 387.01 | Land & Land Rights | - | - | - | - |
| 387 | | | 387.02 | 387.02 | Structures & Improvements | 23,176,806 | 23,176,806 | 23,176,806 | 23,176,806 |
| 388 | | | 387.03 | 387.03 | Energy Storage Equipment | 43,118,825 | 43,118,825 | 43,118,825 | 43,118,825 |
| 389 | | | 387.05 | 387.05 | Collector System | 25,624,069 | 25,624,069 | 25,624,069 | 25,624,069 |
| 390 | | | 387.06 | 387.06 | Generator Step-Up Transformers (GSU) | 59,151,201 | 59,151,201 | 59,151,201 | 59,151,201 |
| 391 | | | 387.07 | 387.07 | Inverters | - | - | - | - |
| 392 | | | 387.08 | 387.08 | Computer Hardware | 5,348,140 | 5,348,140 | 5,348,140 | 5,348,140 |
| 393 | | | 387.09 | 387.09 | Computer Software | 965,150 | 965,150 | 965,150 | 965,150 |
| 394 | | | 387.10 | 387.10 | Communication Equipment | 1,233,478 | 1,233,478 | 1,233,478 | 1,233,478 |
| 395 | | | 387.11 | 387.11 | Misc. Energy Storage Equipment | 7,837,251 | 7,837,251 | 7,837,251 | 7,837,251 |
| 396 | | | 387.12 | 387.12 | Asset Retirement Costs for Energy Storage | - | - | - | - |
| 397 | **Total Gross Energy Storage Plant** | | | | | 166,454,919 | 166,454,919 | 166,454,919 | 166,454,919 |
| 398 | | | | | | | | | |
| 399 | | | | | | | | | |
| 400 | **Gross Plant Transmission Plant** | | | | | | | | |
| 401 | | | | | | | | | |
| 402 | | | | | | | | | |
| 453 | **All - Transmission** | | | | | | | | |
| 454 | | 650 | 350 | 650350 | Land and Land Rights | 81,620,770 | 81,620,770 | 81,620,770 | 81,620,770 |
| 455 | | 650 | 350.1 | 650350.1 | Land - Right of Way | 53,886,328 | 53,886,328 | 53,886,328 | 53,886,328 |
| 456 | | 650 | 351.01 | 650350.01 | Computer Hardware | 16,768,472 | 17,069,528 | 17,078,542 | 17,228,358 |
| 457 | | 650 | 351.02 | 650350.02 | Computer Software | 10,027,103 | 10,027,103 | 10,027,103 | 10,027,103 |
| 458 | | 650 | 351.03 | 650350.03 | Communication Equipment | 49,867,228 | 50,469,339 | 50,488,214 | 50,788,906 |
| 459 | | 650 | 352 | 650352 | Structures and Improvements | 260,029,270 | 262,496,077 | 262,554,383 | 263,773,466 |
| 460 | | 650 | 353 | 650353 | Station Equipment | 997,651,289 | 1,000,645,178 | 1,003,995,933 | 1,005,410,593 |
| 461 | | 650 | 353.1 | 650353.1 | Station Equipment - Step-up Xfmr and Aux | 12,205,498 | 12,201,638 | 12,197,778 | 12,236,689 |
| 462 | | 650 | 354 | 650354 | Towers and Fixtures | 64,357,116 | 64,332,321 | 64,307,526 | 64,282,731 |
| 463 | | 650 | 355 | 650355 | Poles and Fixtures | 562,856,719 | 563,342,264 | 563,244,232 | 563,432,597 |
| 464 | | 650 | 356 | 650356 | Overhead Conductors and Devices | 237,542,895 | 237,827,222 | 237,855,748 | 237,993,074 |
| 465 | | 650 | 357 | 650357 | Underground Conduit | 660,714 | 660,714 | 733,196 | 733,196 |
| 466 | | 650 | 359 | 650359 | Roads and Trails | 9,800,014 | 9,799,918 | 9,799,822 | 9,799,726 |
| 467 | **Total Gross Plant Transmission Plant** | | | | | 2,357,273,415 | 2,364,378,400 | 2,367,789,573 | 2,371,213,537 |
| 468 | | | | | | | | | |

| | A | B | C | D | E | AG | AH | AI | AJ |
|---|---|---|---|---|---|---|---|---|---|
| 1 | **Public Service Company of New Mexico** | | | | | | | | |
| 2 | **Schedule B-3** | | | | | | | | |
| 3 | **Original Cost of Plant In Service by Monthly Balances** | | | | | | | | |
| 4 | **Base Period Ending 6/30/2026** | | | | | | | | |
| 5 | **Test Period Ending 9/30/2028** | | | | | | | | |
| 6 | Link to WP Plant Lead Sheet | | | | | | | | |
| 7 | | | | | | | | | |
| 8 | **Base Period data is historical Information from the Company's Books and Records.** | | | | | | | | |
| 9 | This schedule is sponsored by PNM Witness Gutierrez | | | | | | | | |
| 10 | **Location** | **Location Number Note 6** | **FERC** | **Loc/ FERC** | **FERC Description** | **Balance 1/1/27** | **Balance 2/1/27** | **Balance 3/1/27** | **Balance 4/1/27** |
| 469 | | | | | | | | | |
| 470 | | | | | | | | | |
| 471 | **Gross Plant Distribution Plant** | | | | | | | | |
| 665 | **All - Distribution** | | | | | | | | |
| 666 | | | 360 | | Land and Land Rights | 10,503,005 | 10,503,005 | 10,503,005 | 10,531,286 |
| 667 | | | 360.1 | | Land - Right of Way | 4,309,620 | 4,309,620 | 4,309,620 | 4,309,620 |
| 668 | | | 361 | | Structures and Improvements | 74,800,312 | 74,805,037 | 74,821,882 | 75,460,909 |
| 669 | | | 362 | | Station Equipment | 354,730,791 | 355,487,670 | 361,230,159 | 362,996,422 |
| 670 | | | 363.01 | | Computer Hardware | 14,425,627 | 14,966,289 | 15,375,922 | 15,784,440 |
| 671 | | | 363.02 | | Computer Software | 71,497,721 | 73,119,709 | 74,348,607 | 75,574,160 |
| 672 | | | 363.03 | | Communication Equipment | 24,132,586 | 27,133,603 | 27,650,884 | 30,266,552 |
| 673 | | | 364 | | Poles, Towers and Fixtures | 503,330,783 | 506,905,034 | 510,610,478 | 511,922,268 |
| 674 | | | 365 | | Overhead Conductors and Devices | 319,636,312 | 326,376,421 | 331,355,240 | 338,198,187 |
| 675 | | | 366 | | Underground Conduit | 206,053,456 | 207,757,050 | 210,612,947 | 212,078,253 |
| 676 | | | 367 | | Underground Conductors and Devices | 494,106,543 | 496,174,677 | 500,811,103 | 503,148,553 |
| 677 | | | 368 | | Line Transformers | 296,228,577 | 296,917,683 | 297,876,233 | 298,610,790 |
| 678 | | | 369 | | Services | 106,419,308 | 106,388,158 | 106,357,008 | 106,325,858 |
| 679 | | | 369.1 | | Services - Underground | 190,130,522 | 190,114,003 | 190,097,484 | 190,080,965 |
| 680 | | | 370 | | Meters Net Plant - PNM | 67,603,078 | 66,721,117 | 65,630,046 | 64,490,756 |
| 681 | | | 370.4 | | Meters Net Plant - Grid Mod | 22,690,474 | 25,934,451 | 28,392,247 | 30,843,354 |
| 682 | | | 371 | | Installations on Customers' Premises | 9,151,530 | 9,151,530 | 9,151,530 | 9,151,530 |
| 683 | | | 371.1 | | Leased Flood Lighting | 307,353 | 307,353 | 307,353 | 307,353 |
| 684 | | | 373 | | Street Lighting and Signal Systems | 32,840,126 | 33,081,805 | 34,159,976 | 34,453,673 |
| 685 | | | 374 | | Asset Retirement Costs - Distribution | - | - | - | - |
| 686 | **Total Gross Plant Distribution Plant** | | | | | 2,802,897,722 | 2,826,154,213 | 2,853,601,724 | 2,874,534,927 |
| 687 | | | | | | | | | |

| | A | B | C | D | E | AG | AH | AI | AJ |
|---|---|---|---|---|---|---|---|---|---|
| 1 | **Public Service Company of New Mexico** | | | | | | | | |
| 2 | **Schedule B-3** | | | | | | | | |
| 3 | **Original Cost of Plant In Service by Monthly Balances** | | | | | | | | |
| 4 | **Base Period Ending 6/30/2026** | | | | | | | | |
| 5 | **Test Period Ending 9/30/2028** | | | | | | | | |
| 6 | Link to WP Plant Lead Sheet | | | | | | | | |
| 7 | | | | | | | | | |
| 8 | **Base Period data is historical Information from the Company's Books and Records.** | | | | | | | | |
| 9 | This schedule is sponsored by PNM Witness Gutierrez | | | | | | | | |
| 10 | **Location** | **Location Number Note 6** | **FERC** | **Loc/ FERC** | **FERC Description** | **Balance 1/1/27** | **Balance 2/1/27** | **Balance 3/1/27** | **Balance 4/1/27** |
| 688 | | | | | | | | | |
| 689 | **Gross Plant G&I Plant (303,389-399)** | | | | | | | | |
| 719 | **Total General & Intangible Plant** | | | | | | | | |
| 720 | | | 303 | 303 | Miscellaneous Intangible Plant | - | - | - | - |
| 721 | | | 389 | 389 | Land and Land Rights | 1,937,568 | 1,937,568 | 1,937,568 | 1,937,568 |
| 722 | | | 390 | 390 | Structures and Improvements | 75,978,312 | 75,946,229 | 75,914,146 | 75,902,862 |
| 723 | | | 390.1 | 390.1 | Bulk Power Office Building Remodeling | 5,892,995 | 5,890,834 | 5,888,673 | 5,886,985 |
| 724 | | | 390.2 | 390.2 | Bulk Power Office Building | 5,945,142 | 5,945,142 | 5,945,142 | 5,945,142 |
| 725 | | | 391 | 391 | Office Furniture and Equipment | 5,041,216 | 5,041,216 | 5,041,216 | 5,043,433 |
| 726 | | | 391.1 | 391.1 | Office Furniture and Equipment - PC System | - | - | - | - |
| 727 | | | 391.2 | 391.2 | Office Furniture and Equipment - PC's | - | - | - | - |
| 728 | | | 391.3 | 391.3 | Computer Hardware | - | - | - | - |
| 729 | | | 391.5 | 391.5 | Computer Hardware - Solar | - | - | - | - |
| 730 | | | 391.7 | 391.7 | Computer Hardware | - | - | - | - |
| 731 | | | 392 | 392 | Transportation Equipment - Light | 4,810,460 | 4,807,641 | 4,804,822 | 4,802,458 |
| 732 | | | 392.1 | 392.1 | Transportation Equipment - Heavy | 5,002,558 | 4,980,975 | 4,959,392 | 4,937,809 |
| 733 | | | 392.2 | 392.2 | Transportation Equipment - Trailers | 8,576,018 | 8,575,744 | 8,575,470 | 8,575,196 |
| 734 | | | 392.4 | 392.4 | Transportation Equipment - Leaseback | - | - | - | - |
| 735 | | | 393 | 393 | Stores Equipment | 97,939 | 97,939 | 97,939 | 97,939 |
| 736 | | | 394 | 394 | Tools, Shop & Garage Equipment | 20,758,753 | 20,758,753 | 20,892,604 | 20,961,260 |
| 737 | | | 395 | 395 | Laboratory Equipment | 206,265 | 206,265 | 206,265 | 206,265 |
| 738 | | | 396 | 396 | Power Operated Equipment | 7,469,178 | 7,468,908 | 7,468,638 | 7,471,421 |
| 739 | | | 397.01 | 397.01 | Computer Hardware | 859,986 | 859,986 | 859,986 | 860,222 |
| 740 | | | 397.02 | 397.02 | Computer Software | 33,256,735 | 33,256,735 | 33,256,735 | 33,256,735 |
| 741 | | | 397.03 | 397.03 | Communication Equipment | - | - | - | - |
| 742 | | | 398 | 398 | Miscellaneous Equipment | 1,779,179 | 1,779,179 | 1,779,179 | 1,779,179 |
| 743 | | | 399.1 | 399.1 | ARO General Plant-1 | 19,473 | 19,473 | 19,473 | 19,473 |
| 744 | **Total Gross Plant G&I Plant - PNM** | | | | | 177,631,777 | 177,572,587 | 177,647,249 | 177,683,947 |
| 745 | | | | | | | | | |
| 746 | **Total Electric Plant In Service** | | 101/106 | | | 7,643,739,021 | 7,675,215,844 | 7,708,464,436 | 7,736,324,502 |
| 747 | | | | | | | | | |
| 748 | **Electric Plant Purchased** | | 102 | | | | | | |
| 749 | | | | | | | | | |
| 750 | **Electric Plant Acquisition Adjustment** | | | | Acq. Adj. - Palo Verde Unit 1&2 (Drexel) | - | - | - | - |
| 751 | | | | | Acq. Adj. - Palo Verde Unit 2 (First Chicago) | 15,947,694 | 15,878,356 | 15,809,019 | 15,739,681 |
| 752 | | | | | Acq. Adj. - (EIP) | - | - | - | - |
| 753 | **Electric Plant Acquisition Adjustment** | | 114 | | | 15,947,694 | 15,878,356 | 15,809,019 | 15,739,681 |
| 754 | | | | | | | | | |
| 755 | **Total Electric Plant** | | | | | 7,659,686,715 | 7,691,094,201 | 7,724,273,455 | 7,752,064,183 |
| 756 | | | | | | | | | |
| 757 | | | | | | | | | |

| | A | B | C | D | E | AG | AH | AI | AJ |
|---|---|---|---|---|---|---|---|---|---|
| 1 | **Public Service Company of New Mexico** | | | | | | | | |
| 2 | **Schedule B-3** | | | | | | | | |
| 3 | **Original Cost of Plant In Service by Monthly Balances** | | | | | | | | |
| 4 | **Base Period Ending 6/30/2026** | | | | | | | | |
| 5 | **Test Period Ending 9/30/2028** | | | | | | | | |
| 6 | Link to WP Plant Lead Sheet | | | | | | | | |
| 7 | | | | | | | | | |
| 8 | **Base Period data is historical Information from the Company's Books and Records.** | | | | | | | | |
| 9 | This schedule is sponsored by PNM Witness Gutierrez | | | | | | | | |
| 10 | **Location** | **Location Number Note 6** | **FERC** | **Loc/ FERC** | **FERC Description** | **Balance 1/1/27** | **Balance 2/1/27** | **Balance 3/1/27** | **Balance 4/1/27** |
| 758 | **Corporate Unallocated** | 900 | 303 | 900303 | Miscellaneous Intangible Plant | - | - | - | - |
| 759 | | 900 | 389 | 900389 | Land and Land Rights | 5,133,327 | 5,133,327 | 5,133,327 | 5,133,327 |
| 760 | | 900 | 390 | 900390 | Structures and Improvements | 79,284,804 | 79,239,468 | 79,194,132 | 80,369,850 |
| 761 | | 900 | 390.1 | 900390.1 | Bulk Power Office Building Remodeling | - | - | - | - |
| 762 | | 900 | 390.2 | 900390.2 | Bulk Power Office Building | - | - | - | - |
| 763 | | 900 | 391 | 900391 | Office Furniture and Equipment | 1,436,592 | 1,436,592 | 1,436,592 | 1,511,717 |
| 764 | | 900 | 391.1 | 900391.1 | Office Furniture and Equipment - PC System | - | - | - | - |
| 765 | | 900 | 391.2 | 900391.2 | Office Furniture and Equipment - PC's | - | - | - | - |
| 766 | | 900 | 391.3 | 900391.3 | Computer Hardware | - | - | - | - |
| 767 | | 900 | 391.5 | 900391.5 | Computer Hardware - Solar | - | - | - | - |
| 768 | | 900 | 391.7 | 900391.7 | Computer Hardware | - | - | - | - |
| 769 | | 900 | 392 | 900392 | Transportation Equipment - Light | 350,330 | 350,330 | 350,330 | 350,330 |
| 770 | | 900 | 392.1 | 900392.1 | Transportation Equipment - Heavy | 52,320 | 52,320 | 52,320 | 52,320 |
| 771 | | 900 | 392.2 | 900392.2 | Transportation Equipment - Trailers | 10,272 | 10,272 | 10,272 | 10,272 |
| 772 | | 900 | 392.4 | 900392.4 | Transportation Equipment - Leaseback | (72) | (84) | (96) | (108) |
| 773 | | 900 | 393 | 900393 | Stores Equipment | - | - | - | - |
| 774 | | 900 | 394 | 900394 | Tools, Shop & Garage Equipment | 594,143 | 594,143 | 594,143 | 594,143 |
| 775 | | 900 | 395 | 900395 | Laboratory Equipment | - | - | - | - |
| 776 | | 900 | 396 | 900396 | Power Operated Equipment | 26,134 | 26,134 | 26,134 | 26,134 |
| 777 | | 900 | 397 | 900397 | Communication Equipment | - | - | - | - |
| 778 | | 900 | 397.01 | 900397.01 | Computer Hardware | 35,662,238 | 35,662,238 | 35,662,238 | 36,608,793 |
| 779 | | 900 | 397.02 | 900397.02 | Computer Software | 233,615,302 | 233,615,302 | 233,615,302 | 247,590,241 |
| 780 | | 900 | 397.03 | 900397.03 | Communication Equipment | 5,097,570 | 5,097,570 | 5,097,570 | 5,097,570 |
| 781 | | 900 | 397.2 | 900397.2 | Communication Equipment | - | - | - | - |
| 782 | | 900 | 397.3 | 900397.3 | Communication Equipment | - | - | - | - |
| 783 | | 900 | 398 | 900398 | Miscellaneous Equipment | - | - | - | - |
| 784 | | 900 | 399.1 | 900399.1 | ARO General Plant-1 | - | - | - | - |
| 785 | | | | | | | | | |
| 786 | **Total Corporate Unallocated** | | | | | 361,262,961 | 361,217,613 | 361,172,265 | 377,344,590 |
| 787 | | | | | | | | | |
| 788 | **al Electric Plant In Service - with Corporate** | | 101/106 | | | 8,005,001,983 | 8,036,433,458 | 8,069,636,701 | 8,113,669,093 |
| 790 | **Electric Plant Purchased - with Corporate** | | 102 | | | | | | |
| 792 | **Electric Plant Acq. Adj. - with Corporate** | | 114 | | | 15,947,694 | 15,878,356 | 15,809,019 | 15,739,681 |
| 793 | | | | | | | | | |
| 794 | **Total Electric Plant - with Corporate** | | | | | 8,020,949,677 | 8,052,311,814 | 8,085,445,720 | 8,129,408,774 |

| | A | B | C | D | E | AK | AL | AM | AN |
|---|---|---|---|---|---|---|---|---|---|
| 1 | **Public Service Company of New Mexico** | | | | | | | | |
| 2 | **Schedule B-3** | | | | | | | | |
| 3 | **Original Cost of Plant In Service by Monthly Balances** | | | | | | | | |
| 4 | **Base Period Ending 6/30/2026** | | | | | | | | |
| 5 | **Test Period Ending 9/30/2028** | | | | | | | | |
| 6 | Link to WP Plant Lead Sheet | | | | | | | | |
| 7 | | | | | | | | | |
| 8 | **Base Period data is historical Information from the Company's Books and Records.** | | | | | | | | |
| 9 | This schedule is sponsored by PNM Witness Gutierrez | | | | | | | | |
| 10 | **Location** | **Location Number Note 6** | **FERC** | **Loc/ FERC** | **FERC Description** | **Balance 5/1/27** | **Balance 6/1/27** | **Balance 7/1/27** | **Balance 8/1/27** |
| 11 | | | | | | | | | |
| 12 | **Production Plant** | | | | | | | | |
| 13 | **Steam Production** | | | | | | | | |
| 56 | **All - Steam** | | | | | | | | |
| 57 | | | 310 | | Land and Land Rights | 618,487 | 618,487 | 618,487 | 618,487 |
| 58 | | | 310.1 | | Land Right of Way | 22,368 | 22,368 | 22,368 | 22,368 |
| 59 | | | 311 | | Structures & Improvements | 31,449,587 | 32,013,504 | 32,098,547 | 32,261,621 |
| 60 | | | 312 | | Boiler Plant Equipment | 261,647,076 | 261,511,137 | 261,226,041 | 260,965,250 |
| 61 | | | 314 | | Turbogenerator Units | 68,263,501 | 68,356,428 | 68,347,301 | 68,354,803 |
| 62 | | | 315 | | Accessory Electric Equipment | 20,385,367 | 20,371,297 | 20,357,227 | 20,343,157 |
| 63 | | | 315.01 | | Computer Hardware | - | - | - | - |
| 64 | | | 315.02 | | Computer Software | 1,362,246 | 1,362,246 | 1,362,246 | 1,362,246 |
| 65 | | | 315.03 | | Communication Equipment | 334,053 | 334,053 | 334,053 | 334,053 |
| 66 | | | 316 | | Misc Power Plant Equipment | 28,180,361 | 28,137,629 | 28,094,897 | 28,052,165 |
| 67 | | | 317 | | Asset Retirement Costs - Steam | 10,249,476 | 10,249,476 | 10,249,476 | 10,249,476 |
| 68 | **Total Steam Production Gross Plant** | | | | | 422,512,520 | 422,976,624 | 422,710,642 | 422,563,624 |
| 69 | | | | | | | | | |
| 70 | | | | | | | | | |
| 71 | **Nuclear Production** | | | | | | | | |
| 129 | **All - Nuclear** | | | | | | | | |
| 130 | | | 320 | | Land and Land Rights | 439,822 | 439,822 | 439,822 | 439,822 |
| 131 | | | 320.1 | | Land - Right of Way | 44,622 | 44,622 | 44,622 | 44,622 |
| 132 | | | 321 | | Structures and Improvements | 207,391,347 | 207,402,718 | 207,907,610 | 208,376,988 |
| 133 | | | 322 | | Reactor Plant Equipment | 341,471,124 | 341,530,446 | 343,810,615 | 345,930,969 |
| 134 | | | 323 | | Turbogenerator Units | 114,563,242 | 114,521,589 | 114,479,936 | 114,438,283 |
| 135 | | | 324 | | Accessory Electric Equipment | 60,824,189 | 60,814,473 | 60,804,757 | 60,795,041 |
| 136 | | | 324.01 | | Computer Hardware | - | - | - | - |
| 137 | | | 324.02 | | Computer Software | 13,682,559 | 13,694,831 | 13,918,613 | 14,127,174 |
| 138 | | | 324.03 | | Communication Equipment | 506,163 | 508,208 | 545,505 | 580,265 |
| 139 | | | 325 | | Misc Power Plant Equipment | 72,640,006 | 72,671,121 | 73,266,262 | 73,820,814 |
| 140 | | | 326 | | Asset Retirement Costs Nuclear Prod Plant | - | - | - | - |
| 141 | **Total Nuclear Production Gross Plant** | | | | | 811,563,074 | 811,627,831 | 815,217,742 | 818,553,979 |

| | A | B | C | D | E | AK | AL | AM | AN |
|---|---|---|---|---|---|---|---|---|---|
| 1 | **Public Service Company of New Mexico** | | | | | | | | |
| 2 | **Schedule B-3** | | | | | | | | |
| 3 | **Original Cost of Plant In Service by Monthly Balances** | | | | | | | | |
| 4 | **Base Period Ending 6/30/2026** | | | | | | | | |
| 5 | **Test Period Ending 9/30/2028** | | | | | | | | |
| 6 | Link to WP Plant Lead Sheet | | | | | | | | |
| 7 | | | | | | | | | |
| 8 | **Base Period data is historical Information from the Company's Books and Records.** | | | | | | | | |
| 9 | This schedule is sponsored by PNM Witness Gutierrez | | | | | | | | |
| 10 | **Location** | **Location Number Note 6** | **FERC** | **Loc/ FERC** | **FERC Description** | **Balance 5/1/27** | **Balance 6/1/27** | **Balance 7/1/27** | **Balance 8/1/27** |
| 142 | | | | | | | | | |
| 143 | | | | | | | | | |
| 144 | **Solar Production** | | | | | | | | |
| 237 | **All - Solar** | | | | | | | | |
| 238 | | | 338.01 | | Land & Land Rights | 11,040,948 | 11,040,948 | 11,040,948 | 11,040,948 |
| 239 | | | 338.02 | | Structures and Improvements | 268,299 | 268,299 | 268,299 | 268,299 |
| 240 | | | 338.04 | | Solar Panels | 277,545,592 | 277,545,592 | 277,545,592 | 277,545,592 |
| 241 | | | 338.05 | | Collector System | 8,264,812 | 8,264,812 | 8,264,812 | 8,264,812 |
| 242 | | | 338.07 | | Solar Inverters | 10,127,593 | 10,127,593 | 10,127,593 | 10,127,593 |
| 243 | | | 338.08 | | Other Accessory Electrical Equipment | 23,775,507 | 23,775,507 | 23,775,507 | 23,775,507 |
| 244 | | | 338.09 | | Computer Hardware | 51,760 | 51,760 | 51,760 | 51,760 |
| 245 | | | 338.10 | | Computer Software | - | - | - | - |
| 246 | | | 338.11 | | Communication Equipment | 637,577 | 637,577 | 637,577 | 637,577 |
| 247 | | | 338.12 | | Misc. Power Plant Equipment | 5,228,178 | 5,228,178 | 5,228,178 | 5,228,178 |
| 248 | **Total Solar Production Gross Plant** | | | | | 336,940,266 | 336,940,266 | 336,940,266 | 336,940,266 |
| 249 | | | | | | | | | |
| 250 | **Other Production** | | | | | | | | |
| 251 | | | | | | | | | |
| 252 | **Other Production - Gas:** | | | | | | | | |
| 339 | **All - Gas** | | 340 | | Land and Land Rights | 7,079,884 | 7,079,884 | 7,079,884 | 7,079,884 |
| 340 | | | 340.1 | | Land - Right of Way | 1,959,313 | 1,959,313 | 1,959,313 | 1,959,313 |
| 341 | | | 341 | | Structures and Improvements | 95,506,182 | 95,468,353 | 95,430,524 | 95,392,695 |
| 342 | | | 342 | | Fuel Holders, Producers, Accessories | 129,113,950 | 129,106,033 | 129,241,209 | 129,233,292 |
| 343 | | | 343 | | Prime Movers | - | - | - | - |
| 344 | | | 344 | | Generators | 262,258,694 | 262,181,739 | 262,104,784 | 262,027,829 |
| 345 | | | 345 | | Accessory Electric Equipment | 27,276,871 | 27,242,950 | 27,209,029 | 27,175,108 |
| 346 | | | 345.01 | | Computer Hardware | 53,885 | 53,885 | - | - |
| 347 | | | 345.02 | | Computer Software | 60,931 | 60,931 | 60,931 | 60,931 |
| 348 | | | 345.03 | | Communication Equipment | 38,862 | 38,862 | 38,862 | 38,862 |
| 349 | | | 346 | | Misc Power Plant Equipment | 48,796,412 | 48,779,120 | 48,773,422 | 48,756,130 |
| 350 | | | 347 | | Asset Retirement Costs - Other Production | 7,008,573 | 7,008,573 | 7,008,573 | 7,008,573 |
| 351 | **Total Other Production Plant - Gas** | | | | | 579,153,558 | 578,979,644 | 578,906,531 | 578,732,617 |
| 352 | | | | | | | | | |
| 353 | | | | | | | | | |
| 354 | **Total Other Production Gross Plant** | | | | | 579,153,558 | 578,979,644 | 578,906,531 | 578,732,617 |
| 355 | | | | | | | | | |
| 356 | **Total Gross Plant Production** | | | | | 2,150,169,419 | 2,150,524,365 | 2,153,775,181 | 2,156,790,487 |
| 357 | | | | | | | | | |
| 358 | | | | | | | | | |

| | A | B | C | D | E | AK | AL | AM | AN |
|---|---|---|---|---|---|---|---|---|---|
| 1 | **Public Service Company of New Mexico** | | | | | | | | |
| 2 | **Schedule B-3** | | | | | | | | |
| 3 | **Original Cost of Plant In Service by Monthly Balances** | | | | | | | | |
| 4 | **Base Period Ending 6/30/2026** | | | | | | | | |
| 5 | **Test Period Ending 9/30/2028** | | | | | | | | |
| 6 | Link to WP Plant Lead Sheet | | | | | | | | |
| 7 | | | | | | | | | |
| 8 | **Base Period data is historical Information from the Company's Books and Records.** | | | | | | | | |
| 9 | This schedule is sponsored by PNM Witness Gutierrez | | | | | | | | |
| 10 | **Location** | **Location Number Note 6** | **FERC** | **Loc/ FERC** | **FERC Description** | **Balance 5/1/27** | **Balance 6/1/27** | **Balance 7/1/27** | **Balance 8/1/27** |
| 359 | **Total Gross Energy Storage Plant** | | | | | | | | |
| 386 | **All - Energy Storage** | | 387.01 | 387.01 | Land & Land Rights | - | - | - | - |
| 387 | | | 387.02 | 387.02 | Structures & Improvements | 23,176,806 | 23,176,806 | 23,176,806 | 23,176,806 |
| 388 | | | 387.03 | 387.03 | Energy Storage Equipment | 118,525,671 | 118,525,671 | 118,525,671 | 118,525,671 |
| 389 | | | 387.05 | 387.05 | Collector System | 25,624,069 | 25,624,069 | 25,624,069 | 25,624,069 |
| 390 | | | 387.06 | 387.06 | Generator Step-Up Transformers (GSU) | 59,151,201 | 59,151,201 | 59,151,201 | 59,151,201 |
| 391 | | | 387.07 | 387.07 | Inverters | - | - | - | - |
| 392 | | | 387.08 | 387.08 | Computer Hardware | 5,348,140 | 5,348,140 | 5,348,140 | 5,348,140 |
| 393 | | | 387.09 | 387.09 | Computer Software | 965,150 | 965,150 | 965,150 | 965,150 |
| 394 | | | 387.10 | 387.10 | Communication Equipment | 1,233,478 | 1,233,478 | 1,233,478 | 1,233,478 |
| 395 | | | 387.11 | 387.11 | Misc. Energy Storage Equipment | 7,837,251 | 7,837,251 | 7,837,251 | 7,837,251 |
| 396 | | | 387.12 | 387.12 | Asset Retirement Costs for Energy Storage | - | - | - | - |
| 397 | **Total Gross Energy Storage Plant** | | | | | 241,861,764 | 241,861,764 | 241,861,764 | 241,861,764 |
| 398 | | | | | | | | | |
| 399 | | | | | | | | | |
| 400 | **Gross Plant Transmission Plant** | | | | | | | | |
| 401 | | | | | | | | | |
| 402 | | | | | | | | | |
| 453 | **All - Transmission** | | | | | | | | |
| 454 | | 650 | 350 | 650350 | Land and Land Rights | 81,620,770 | 82,646,570 | 82,646,570 | 82,837,750 |
| 455 | | 650 | 350.1 | 650350.1 | Land - Right of Way | 53,886,328 | 53,886,328 | 53,886,328 | 53,981,918 |
| 456 | | 650 | 351.01 | 650350.01 | Computer Hardware | 17,703,076 | 17,759,073 | 17,903,133 | 18,048,115 |
| 457 | | 650 | 351.02 | 650350.02 | Computer Software | 10,027,103 | 10,027,103 | 10,027,103 | 10,027,103 |
| 458 | | 650 | 351.03 | 650350.03 | Communication Equipment | 51,738,343 | 52,746,891 | 52,426,043 | 53,002,776 |
| 459 | | 650 | 352 | 650352 | Structures and Improvements | 267,672,987 | 268,118,051 | 269,289,649 | 270,946,794 |
| 460 | | 650 | 353 | 650353 | Station Equipment | 1,010,322,153 | 1,045,109,514 | 1,046,468,698 | 1,052,965,036 |
| 461 | | 650 | 353.1 | 650353.1 | Station Equipment - Step-up Xfmr and Aux | 12,232,829 | 12,228,969 | 12,225,109 | 12,221,249 |
| 462 | | 650 | 354 | 650354 | Towers and Fixtures | 64,257,936 | 64,233,141 | 64,208,346 | 64,183,551 |
| 463 | | 650 | 355 | 650355 | Poles and Fixtures | 564,265,466 | 566,960,700 | 567,141,589 | 570,087,096 |
| 464 | | 650 | 356 | 650356 | Overhead Conductors and Devices | 238,451,063 | 238,490,330 | 238,625,130 | 239,326,922 |
| 465 | | 650 | 357 | 650357 | Underground Conduit | 733,196 | 733,196 | 733,196 | 733,196 |
| 466 | | 650 | 359 | 650359 | Roads and Trails | 9,799,630 | 9,799,534 | 9,799,438 | 9,799,342 |
| 467 | **Total Gross Plant Transmission Plant** | | | | | 2,382,710,881 | 2,422,739,400 | 2,425,380,332 | 2,438,160,848 |
| 468 | | | | | | | | | |

| | A | B | C | D | E | AK | AL | AM | AN |
|---|---|---|---|---|---|---|---|---|---|
| 1 | **Public Service Company of New Mexico** | | | | | | | | |
| 2 | **Schedule B-3** | | | | | | | | |
| 3 | **Original Cost of Plant In Service by Monthly Balances** | | | | | | | | |
| 4 | **Base Period Ending 6/30/2026** | | | | | | | | |
| 5 | **Test Period Ending 9/30/2028** | | | | | | | | |
| 6 | Link to WP Plant Lead Sheet | | | | | | | | |
| 7 | | | | | | | | | |
| 8 | **Base Period data is historical Information from the Company's Books and Records.** | | | | | | | | |
| 9 | This schedule is sponsored by PNM Witness Gutierrez | | | | | | | | |
| 10 | **Location** | **Location Number Note 6** | **FERC** | **Loc/ FERC** | **FERC Description** | **Balance 5/1/27** | **Balance 6/1/27** | **Balance 7/1/27** | **Balance 8/1/27** |
| 469 | | | | | | | | | |
| 470 | | | | | | | | | |
| 471 | **Gross Plant Distribution Plant** | | | | | | | | |
| 665 | **All - Distribution** | | | | | | | | |
| 666 | | | 360 | | Land and Land Rights | 10,583,433 | 10,594,778 | 10,606,766 | 10,646,265 |
| 667 | | | 360.1 | | Land - Right of Way | 4,309,620 | 4,685,187 | 4,685,187 | 4,685,187 |
| 668 | | | 361 | | Structures and Improvements | 76,431,603 | 76,539,580 | 76,695,729 | 76,885,509 |
| 669 | | | 362 | | Station Equipment | 364,354,022 | 374,126,133 | 395,083,614 | 396,075,421 |
| 670 | | | 363.01 | | Computer Hardware | 16,497,175 | 17,103,265 | 17,744,064 | 18,308,656 |
| 671 | | | 363.02 | | Computer Software | 77,712,367 | 79,530,636 | 81,453,034 | 83,146,809 |
| 672 | | | 363.03 | | Communication Equipment | 30,406,652 | 32,692,813 | 32,815,768 | 34,345,780 |
| 673 | | | 364 | | Poles, Towers and Fixtures | 513,707,513 | 515,285,879 | 516,506,969 | 518,121,352 |
| 674 | | | 365 | | Overhead Conductors and Devices | 340,976,400 | 343,364,909 | 345,400,445 | 346,771,685 |
| 675 | | | 366 | | Underground Conduit | 212,962,982 | 213,684,619 | 214,627,888 | 215,631,563 |
| 676 | | | 367 | | Underground Conductors and Devices | 504,964,027 | 506,343,467 | 507,661,817 | 509,105,633 |
| 677 | | | 368 | | Line Transformers | 299,397,637 | 300,214,435 | 301,051,426 | 301,941,681 |
| 678 | | | 369 | | Services | 108,068,156 | 108,037,006 | 108,005,856 | 109,336,675 |
| 679 | | | 369.1 | | Services - Underground | 195,680,366 | 195,663,847 | 195,647,328 | 199,943,710 |
| 680 | | | 370 | | Meters Net Plant - PNM | 63,118,022 | 61,709,452 | 60,102,800 | 58,591,305 |
| 681 | | | 370.4 | | Meters Net Plant - Grid Mod | 35,119,767 | 38,756,305 | 42,601,100 | 45,988,650 |
| 682 | | | 371 | | Installations on Customers' Premises | 9,151,530 | 9,151,530 | 9,151,530 | 9,151,530 |
| 683 | | | 371.1 | | Leased Flood Lighting | 307,353 | 307,353 | 307,353 | 307,353 |
| 684 | | | 373 | | Street Lighting and Signal Systems | 34,799,576 | 35,104,159 | 35,385,056 | 35,675,044 |
| 685 | | | 374 | | Asset Retirement Costs - Distribution | - | - | - | - |
| 686 | **Total Gross Plant Distribution Plant** | | | | | 2,898,548,200 | 2,922,895,352 | 2,955,533,729 | 2,974,659,806 |
| 687 | | | | | | | | | |

| | A | B | C | D | E | AK | AL | AM | AN |
|---|---|---|---|---|---|---|---|---|---|
| 1 | **Public Service Company of New Mexico** | | | | | | | | |
| 2 | **Schedule B-3** | | | | | | | | |
| 3 | **Original Cost of Plant In Service by Monthly Balances** | | | | | | | | |
| 4 | **Base Period Ending 6/30/2026** | | | | | | | | |
| 5 | **Test Period Ending 9/30/2028** | | | | | | | | |
| 6 | Link to WP Plant Lead Sheet | | | | | | | | |
| 7 | | | | | | | | | |
| 8 | **Base Period data is historical Information from the Company's Books and Records.** | | | | | | | | |
| 9 | This schedule is sponsored by PNM Witness Gutierrez | | | | | | | | |
| 10 | **Location** | **Location Number Note 6** | **FERC** | **Loc/ FERC** | **FERC Description** | **Balance 5/1/27** | **Balance 6/1/27** | **Balance 7/1/27** | **Balance 8/1/27** |
| 688 | | | | | | | | | |
| 689 | **Gross Plant G&I Plant (303,389-399)** | | | | | | | | |
| 719 | **Total General & Intangible Plant** | | | | | | | | |
| 720 | | | 303 | 303 | Miscellaneous Intangible Plant | - | - | - | - |
| 721 | | | 389 | 389 | Land and Land Rights | 1,937,568 | 1,937,568 | 1,937,568 | 1,937,568 |
| 722 | | | 390 | 390 | Structures and Improvements | 76,016,729 | 77,279,790 | 77,563,289 | 77,677,156 |
| 723 | | | 390.1 | 390.1 | Bulk Power Office Building Remodeling | 5,884,824 | 5,882,663 | 5,880,974 | 5,878,813 |
| 724 | | | 390.2 | 390.2 | Bulk Power Office Building | 5,945,142 | 5,945,142 | 5,945,142 | 5,945,142 |
| 725 | | | 391 | 391 | Office Furniture and Equipment | 5,049,162 | 5,049,162 | 5,054,332 | 5,057,288 |
| 726 | | | 391.1 | 391.1 | Office Furniture and Equipment - PC System | - | - | - | - |
| 727 | | | 391.2 | 391.2 | Office Furniture and Equipment - PC's | - | - | - | - |
| 728 | | | 391.3 | 391.3 | Computer Hardware | - | - | - | - |
| 729 | | | 391.5 | 391.5 | Computer Hardware - Solar | - | - | - | - |
| 730 | | | 391.7 | 391.7 | Computer Hardware | - | - | - | - |
| 731 | | | 392 | 392 | Transportation Equipment - Light | 4,807,161 | 4,804,342 | 4,801,881 | 4,799,062 |
| 732 | | | 392.1 | 392.1 | Transportation Equipment - Heavy | 4,916,226 | 4,894,643 | 4,873,060 | 4,851,477 |
| 733 | | | 392.2 | 392.2 | Transportation Equipment - Trailers | 8,574,922 | 8,574,648 | 8,574,374 | 8,574,100 |
| 734 | | | 392.4 | 392.4 | Transportation Equipment - Leaseback | - | - | - | - |
| 735 | | | 393 | 393 | Stores Equipment | 97,939 | 97,939 | 97,939 | 97,939 |
| 736 | | | 394 | 394 | Tools, Shop & Garage Equipment | 21,061,319 | 21,061,319 | 20,606,090 | 20,642,763 |
| 737 | | | 395 | 395 | Laboratory Equipment | 206,265 | 206,265 | 206,265 | 206,265 |
| 738 | | | 396 | 396 | Power Operated Equipment | 7,478,061 | 7,477,791 | 7,482,646 | 7,484,436 |
| 739 | | | 397.01 | 397.01 | Computer Hardware | 860,222 | 860,222 | 860,459 | 860,459 |
| 740 | | | 397.02 | 397.02 | Computer Software | 34,139,229 | 34,139,229 | 34,139,229 | 34,139,229 |
| 741 | | | 397.03 | 397.03 | Communication Equipment | - | - | - | - |
| 742 | | | 398 | 398 | Miscellaneous Equipment | 1,779,179 | 1,853,139 | 1,823,135 | 1,823,135 |
| 743 | | | 399.1 | 399.1 | ARO General Plant-1 | 19,473 | 19,473 | 19,473 | 19,473 |
| 744 | **Total Gross Plant G&I Plant - PNM** | | | | | 178,773,420 | 180,083,334 | 179,865,856 | 179,994,305 |
| 745 | | | | | | | | | |
| 746 | **Total Electric Plant In Service** | | 101/106 | | | 7,852,063,685 | 7,918,104,215 | 7,956,416,863 | 7,991,467,211 |
| 747 | | | | | | | | | |
| 748 | **Electric Plant Purchased** | | 102 | | | | | | |
| 749 | | | | | | | | | |
| 750 | **Electric Plant Acquisition Adjustment** | | | | Acq. Adj. - Palo Verde Unit 1&2 (Drexel) | - | - | - | - |
| 751 | | | | | Acq. Adj. - Palo Verde Unit 2 (First Chicago) | 15,670,343 | 15,601,005 | 15,531,668 | 15,462,330 |
| 752 | | | | | Acq. Adj. - (EIP) | - | - | - | - |
| 753 | **Electric Plant Acquisition Adjustment** | | 114 | | | 15,670,343 | 15,601,005 | 15,531,668 | 15,462,330 |
| 754 | | | | | | | | | |
| 755 | **Total Electric Plant** | | | | | 7,867,734,028 | 7,933,705,220 | 7,971,948,531 | 8,006,929,541 |
| 756 | | | | | | | | | |
| 757 | | | | | | | | | |

| | A | B | C | D | E | AK | AL | AM | AN |
|---|---|---|---|---|---|---|---|---|---|
| 1 | **Public Service Company of New Mexico** | | | | | | | | |
| 2 | **Schedule B-3** | | | | | | | | |
| 3 | **Original Cost of Plant In Service by Monthly Balances** | | | | | | | | |
| 4 | **Base Period Ending 6/30/2026** | | | | | | | | |
| 5 | **Test Period Ending 9/30/2028** | | | | | | | | |
| 6 | Link to WP Plant Lead Sheet | | | | | | | | |
| 7 | | | | | | | | | |
| 8 | **Base Period data is historical Information from the Company's Books and Records.** | | | | | | | | |
| 9 | This schedule is sponsored by PNM Witness Gutierrez | | | | | | | | |
| 10 | **Location** | **Location Number Note 6** | **FERC** | **Loc/ FERC** | **FERC Description** | **Balance 5/1/27** | **Balance 6/1/27** | **Balance 7/1/27** | **Balance 8/1/27** |
| 758 | **Corporate Unallocated** | 900 | 303 | 900303 | Miscellaneous Intangible Plant | - | - | - | - |
| 759 | | 900 | 389 | 900389 | Land and Land Rights | 5,133,327 | 5,133,327 | 5,133,327 | 5,133,327 |
| 760 | | 900 | 390 | 900390 | Structures and Improvements | 80,324,514 | 80,279,178 | 81,499,817 | 81,454,481 |
| 761 | | 900 | 390.1 | 900390.1 | Bulk Power Office Building Remodeling | - | - | - | - |
| 762 | | 900 | 390.2 | 900390.2 | Bulk Power Office Building | - | - | - | - |
| 763 | | 900 | 391 | 900391 | Office Furniture and Equipment | 1,511,717 | 1,517,397 | 1,543,771 | 1,543,771 |
| 764 | | 900 | 391.1 | 900391.1 | Office Furniture and Equipment - PC System | - | - | - | - |
| 765 | | 900 | 391.2 | 900391.2 | Office Furniture and Equipment - PC's | - | - | - | - |
| 766 | | 900 | 391.3 | 900391.3 | Computer Hardware | - | - | - | - |
| 767 | | 900 | 391.5 | 900391.5 | Computer Hardware - Solar | - | - | - | - |
| 768 | | 900 | 391.7 | 900391.7 | Computer Hardware | - | - | - | - |
| 769 | | 900 | 392 | 900392 | Transportation Equipment - Light | 350,330 | 350,330 | 350,330 | 350,330 |
| 770 | | 900 | 392.1 | 900392.1 | Transportation Equipment - Heavy | 52,320 | 52,320 | 52,320 | 52,320 |
| 771 | | 900 | 392.2 | 900392.2 | Transportation Equipment - Trailers | 10,272 | 10,272 | 10,272 | 10,272 |
| 772 | | 900 | 392.4 | 900392.4 | Transportation Equipment - Leaseback | (120) | (132) | (144) | (156) |
| 773 | | 900 | 393 | 900393 | Stores Equipment | - | - | - | - |
| 774 | | 900 | 394 | 900394 | Tools, Shop & Garage Equipment | 594,143 | 594,143 | 412,720 | 412,720 |
| 775 | | 900 | 395 | 900395 | Laboratory Equipment | - | - | - | - |
| 776 | | 900 | 396 | 900396 | Power Operated Equipment | 26,134 | 26,134 | 26,134 | 26,134 |
| 777 | | 900 | 397 | 900397 | Communication Equipment | - | - | - | - |
| 778 | | 900 | 397.01 | 900397.01 | Computer Hardware | 36,608,793 | 36,716,699 | 31,383,481 | 31,383,481 |
| 779 | | 900 | 397.02 | 900397.02 | Computer Software | 247,590,241 | 248,044,581 | 248,044,581 | 248,044,581 |
| 780 | | 900 | 397.03 | 900397.03 | Communication Equipment | 5,097,570 | 5,097,570 | 3,768,504 | 3,768,504 |
| 781 | | 900 | 397.2 | 900397.2 | Communication Equipment | - | - | - | - |
| 782 | | 900 | 397.3 | 900397.3 | Communication Equipment | - | - | - | - |
| 783 | | 900 | 398 | 900398 | Miscellaneous Equipment | - | - | - | - |
| 784 | | 900 | 399.1 | 900399.1 | ARO General Plant-1 | - | - | - | - |
| 785 | | | | | | | | | |
| 786 | **Total Corporate Unallocated** | | | | | 377,299,242 | 377,821,819 | 372,225,114 | 372,179,766 |
| 787 | | | | | | | | | |
| 788 | **al Electric Plant In Service - with Corporate** | | 101/106 | | | 8,229,362,927 | 8,295,926,034 | 8,328,641,977 | 8,363,646,977 |
| 790 | **Electric Plant Purchased - with Corporate** | | 102 | | | | | | |
| 792 | **Electric Plant Acq. Adj. - with Corporate** | | 114 | | | 15,670,343 | 15,601,005 | 15,531,668 | 15,462,330 |
| 793 | | | | | | | | | |
| 794 | **Total Electric Plant - with Corporate** | | | | | 8,245,033,270 | 8,311,527,040 | 8,344,173,645 | 8,379,109,307 |

| | A | B | C | D | E | AO | AP | AQ | AR |
|---|---|---|---|---|---|---|---|---|---|
| 1 | **Public Service Company of New Mexico** | | | | | | | | |
| 2 | **Schedule B-3** | | | | | | | | |
| 3 | **Original Cost of Plant In Service by Monthly Balances** | | | | | | | | |
| 4 | **Base Period Ending 6/30/2026** | | | | | | | | |
| 5 | **Test Period Ending 9/30/2028** | | | | | | | | |
| 6 | Link to WP Plant Lead Sheet | | | | | | | | |
| 7 | | | | | | | | | |
| 8 | **Base Period data is historical Information from the Company's Books and Records.** | | | | | | | | |
| 9 | This schedule is sponsored by PNM Witness Gutierrez | | | | | | | | |
| 10 | **Location** | **Location Number Note 6** | **FERC** | **Loc/ FERC** | **FERC Description** | **Balance 9/1/27** | **Linkage Period Ending Balance 9/30/27** | **Reference** | **Test Period Beginning Balance 10/1/27** |
| 11 | | | | | | | | | |
| 12 | **Production Plant** | | | | | | | | |
| 13 | **Steam Production** | | | | | | | | |
| 56 | **All - Steam** | | | | | | | | |
| 57 | | | 310 | | Land and Land Rights | 618,487 | 618,487 | | 618,487 |
| 58 | | | 310.1 | | Land Right of Way | 22,368 | 22,368 | | 22,368 |
| 59 | | | 311 | | Structures & Improvements | 32,276,708 | 32,356,141 | | 32,356,141 |
| 60 | | | 312 | | Boiler Plant Equipment | 260,658,364 | 260,881,590 | | 260,881,590 |
| 61 | | | 314 | | Turbogenerator Units | 68,330,767 | 68,616,614 | | 68,616,614 |
| 62 | | | 315 | | Accessory Electric Equipment | 20,329,087 | 20,350,441 | | 20,350,441 |
| 63 | | | 315.01 | | Computer Hardware | - | - | | - |
| 64 | | | 315.02 | | Computer Software | 1,362,246 | 1,362,246 | | 1,362,246 |
| 65 | | | 315.03 | | Communication Equipment | 334,053 | 334,053 | | 334,053 |
| 66 | | | 316 | | Misc Power Plant Equipment | 28,009,433 | 28,108,397 | | 28,108,397 |
| 67 | | | 317 | | Asset Retirement Costs - Steam | 10,249,476 | 10,249,476 | | 10,249,476 |
| 68 | **Total Steam Production Gross Plant** | | | | | 422,190,988 | 422,899,812 | | 422,899,812 |
| 69 | | | | | | | | | |
| 70 | | | | | | | | | |
| 71 | **Nuclear Production** | | | | | | | | |
| 129 | **All - Nuclear** | | | | | | | | |
| 130 | | | 320 | | Land and Land Rights | 439,822 | 439,822 | | 439,822 |
| 131 | | | 320.1 | | Land - Right of Way | 44,622 | 44,622 | | 44,622 |
| 132 | | | 321 | | Structures and Improvements | 208,470,790 | 208,473,000 | | 208,473,000 |
| 133 | | | 322 | | Reactor Plant Equipment | 346,361,229 | 346,379,326 | | 346,379,326 |
| 134 | | | 323 | | Turbogenerator Units | 114,396,630 | 114,354,977 | | 114,354,977 |
| 135 | | | 324 | | Accessory Electric Equipment | 60,785,325 | 60,775,609 | | 60,775,609 |
| 136 | | | 324.01 | | Computer Hardware | - | - | | - |
| 137 | | | 324.02 | | Computer Software | 14,174,774 | 14,183,120 | | 14,183,120 |
| 138 | | | 324.03 | | Communication Equipment | 588,199 | 589,590 | | 589,590 |
| 139 | | | 325 | | Misc Power Plant Equipment | 73,946,136 | 73,966,782 | | 73,966,782 |
| 140 | | | 326 | | Asset Retirement Costs Nuclear Prod Plant | - | - | | - |
| 141 | **Total Nuclear Production Gross Plant** | | | | | 819,207,527 | 819,206,848 | | 819,206,848 |

| | A | B | C | D | E | AO | AP | AQ | AR |
|---|---|---|---|---|---|---|---|---|---|
| 1 | **Public Service Company of New Mexico** | | | | | | | | |
| 2 | **Schedule B-3** | | | | | | | | |
| 3 | **Original Cost of Plant In Service by Monthly Balances** | | | | | | | | |
| 4 | **Base Period Ending 6/30/2026** | | | | | | | | |
| 5 | **Test Period Ending 9/30/2028** | | | | | | | | |
| 6 | Link to WP Plant Lead Sheet | | | | | | | | |
| 7 | | | | | | | | | |
| 8 | **Base Period data is historical Information from the Company's Books and Records.** | | | | | | | | |
| 9 | This schedule is sponsored by PNM Witness Gutierrez | | | | | | | | |
| 10 | **Location** | **Location Number Note 6** | **FERC** | **Loc/ FERC** | **FERC Description** | **Balance 9/1/27** | **Linkage Period Ending Balance 9/30/27** | **Reference** | **Test Period Beginning Balance 10/1/27** |
| 142 | | | | | | | | | |
| 143 | | | | | | | | | |
| 144 | **Solar Production** | | | | | | | | |
| 237 | **All - Solar** | | | | | | | | |
| 238 | | | 338.01 | | Land & Land Rights | 11,040,948 | 11,040,948 | | 11,040,948 |
| 239 | | | 338.02 | | Structures and Improvements | 268,299 | 268,299 | | 268,299 |
| 240 | | | 338.04 | | Solar Panels | 277,545,592 | 437,158,839 | | 437,158,839 |
| 241 | | | 338.05 | | Collector System | 8,264,812 | 8,264,812 | | 8,264,812 |
| 242 | | | 338.07 | | Solar Inverters | 10,127,593 | 10,127,593 | | 10,127,593 |
| 243 | | | 338.08 | | Other Accessory Electrical Equipment | 23,775,507 | 23,775,507 | | 23,775,507 |
| 244 | | | 338.09 | | Computer Hardware | 51,760 | 51,760 | | 51,760 |
| 245 | | | 338.10 | | Computer Software | - | - | | - |
| 246 | | | 338.11 | | Communication Equipment | 637,577 | 637,577 | | 637,577 |
| 247 | | | 338.12 | | Misc. Power Plant Equipment | 5,228,178 | 5,228,178 | | 5,228,178 |
| 248 | **Total Solar Production Gross Plant** | | | | | 336,940,266 | 496,553,513 | | 496,553,513 |
| 249 | | | | | | | | | |
| 250 | **Other Production** | | | | | | | | |
| 251 | | | | | | | | | |
| 252 | **Other Production - Gas:** | | | | | | | | |
| 339 | **All - Gas** | | 340 | | Land and Land Rights | 7,079,884 | 7,079,884 | | 7,079,884 |
| 340 | | | 340.1 | | Land - Right of Way | 1,959,313 | 1,959,313 | | 1,959,313 |
| 341 | | | 341 | | Structures and Improvements | 95,354,866 | 95,317,037 | | 95,317,037 |
| 342 | | | 342 | | Fuel Holders, Producers, Accessories | 130,079,874 | 130,071,957 | | 130,071,957 |
| 343 | | | 343 | | Prime Movers | - | - | | - |
| 344 | | | 344 | | Generators | 261,950,874 | 261,873,919 | | 261,873,919 |
| 345 | | | 345 | | Accessory Electric Equipment | 27,141,187 | 27,107,266 | | 27,107,266 |
| 346 | | | 345.01 | | Computer Hardware | - | - | | - |
| 347 | | | 345.02 | | Computer Software | 60,931 | 60,931 | | 60,931 |
| 348 | | | 345.03 | | Communication Equipment | 38,862 | 38,862 | | 38,862 |
| 349 | | | 346 | | Misc Power Plant Equipment | 48,738,838 | 48,770,801 | | 48,770,801 |
| 350 | | | 347 | | Asset Retirement Costs - Other Production | 7,008,573 | 7,008,573 | | 7,008,573 |
| 351 | **Total Other Production Plant - Gas** | | | | | 579,413,203 | 579,288,544 | | 579,288,544 |
| 352 | | | | | | | | | |
| 353 | | | | | | | | | |
| 354 | **Total Other Production Gross Plant** | | | | | 579,413,203 | 579,288,544 | | 579,288,544 |
| 355 | | | | | | | | | |
| 356 | **Total Gross Plant Production** | | | | | 2,157,751,984 | 2,317,948,717 | | 2,317,948,717 |
| 357 | | | | | | | | | |
| 358 | | | | | | | | | |

| | A | B | C | D | E | AO | AP | AQ | AR |
|---|---|---|---|---|---|---|---|---|---|
| 1 | **Public Service Company of New Mexico** | | | | | | | | |
| 2 | **Schedule B-3** | | | | | | | | |
| 3 | **Original Cost of Plant In Service by Monthly Balances** | | | | | | | | |
| 4 | **Base Period Ending 6/30/2026** | | | | | | | | |
| 5 | **Test Period Ending 9/30/2028** | | | | | | | | |
| 6 | Link to WP Plant Lead Sheet | | | | | | | | |
| 7 | | | | | | | | | |
| 8 | **Base Period data is historical Information from the Company's Books and Records.** | | | | | | | | |
| 9 | This schedule is sponsored by PNM Witness Gutierrez | | | | | | | | |
| 10 | **Location** | **Location Number Note 6** | **FERC** | **Loc/ FERC** | **FERC Description** | **Balance 9/1/27** | **Linkage Period Ending Balance 9/30/27** | **Reference** | **Test Period Beginning Balance 10/1/27** |
| 359 | **Total Gross Energy Storage Plant** | | | | | | | | |
| 386 | **All - Energy Storage** | | 387.01 | 387.01 | Land & Land Rights | - | - | | - |
| 387 | | | 387.02 | 387.02 | Structures & Improvements | 23,176,806 | 23,176,806 | | 23,176,806 |
| 388 | | | 387.03 | 387.03 | Energy Storage Equipment | 118,525,671 | 208,308,122 | | 208,308,122 |
| 389 | | | 387.05 | 387.05 | Collector System | 25,624,069 | 25,624,069 | | 25,624,069 |
| 390 | | | 387.06 | 387.06 | Generator Step-Up Transformers (GSU) | 59,151,201 | 59,151,201 | | 59,151,201 |
| 391 | | | 387.07 | 387.07 | Inverters | - | - | | - |
| 392 | | | 387.08 | 387.08 | Computer Hardware | 5,348,140 | 5,348,140 | | 5,348,140 |
| 393 | | | 387.09 | 387.09 | Computer Software | 965,150 | 965,150 | | 965,150 |
| 394 | | | 387.10 | 387.10 | Communication Equipment | 1,233,478 | 1,233,478 | | 1,233,478 |
| 395 | | | 387.11 | 387.11 | Misc. Energy Storage Equipment | 7,837,251 | 7,837,251 | | 7,837,251 |
| 396 | | | 387.12 | 387.12 | Asset Retirement Costs for Energy Storage | - | - | | - |
| 397 | **Total Gross Energy Storage Plant** | | | | | 241,861,764 | 331,644,216 | | 331,644,216 |
| 398 | | | | | | | | | |
| 399 | | | | | | | | | |
| 400 | **Gross Plant Transmission Plant** | | | | | | | | |
| 401 | | | | | | | | | |
| 402 | | | | | | | | | |
| 453 | **All - Transmission** | | | | | | | | |
| 454 | | 650 | 350 | 650350 | Land and Land Rights | 82,837,750 | 83,233,231 | | 83,233,231 |
| 455 | | 650 | 350.1 | 650350.1 | Land - Right of Way | 53,981,918 | 53,981,918 | | 53,981,918 |
| 456 | | 650 | 351.01 | 650350.01 | Computer Hardware | 18,069,735 | 18,096,918 | | 18,096,918 |
| 457 | | 650 | 351.02 | 650350.02 | Computer Software | 10,027,103 | 10,027,103 | | 10,027,103 |
| 458 | | 650 | 351.03 | 650350.03 | Communication Equipment | 53,046,017 | 53,102,864 | | 53,102,864 |
| 459 | | 650 | 352 | 650352 | Structures and Improvements | 271,108,257 | 271,315,610 | | 271,315,610 |
| 460 | | 650 | 353 | 650353 | Station Equipment | 1,052,956,395 | 1,072,451,025 | | 1,072,451,025 |
| 461 | | 650 | 353.1 | 650353.1 | Station Equipment - Step-up Xfmr and Aux | 12,217,389 | 12,237,145 | | 12,237,145 |
| 462 | | 650 | 354 | 650354 | Towers and Fixtures | 64,158,756 | 64,133,961 | | 64,133,961 |
| 463 | | 650 | 355 | 650355 | Poles and Fixtures | 570,013,769 | 569,963,977 | | 569,963,977 |
| 464 | | 650 | 356 | 650356 | Overhead Conductors and Devices | 239,331,814 | 239,352,195 | | 239,352,195 |
| 465 | | 650 | 357 | 650357 | Underground Conduit | 733,196 | 733,196 | | 733,196 |
| 466 | | 650 | 359 | 650359 | Roads and Trails | 9,799,246 | 9,799,150 | | 9,799,150 |
| 467 | **Total Gross Plant Transmission Plant** | | | | | 2,438,281,345 | 2,458,428,292 | | 2,458,428,292 |
| 468 | | | | | | | | | |

| | A | B | C | D | E | AO | AP | AQ | AR |
|---|---|---|---|---|---|---|---|---|---|
| 1 | **Public Service Company of New Mexico** | | | | | | | | |
| 2 | **Schedule B-3** | | | | | | | | |
| 3 | **Original Cost of Plant In Service by Monthly Balances** | | | | | | | | |
| 4 | **Base Period Ending 6/30/2026** | | | | | | | | |
| 5 | **Test Period Ending 9/30/2028** | | | | | | | | |
| 6 | Link to WP Plant Lead Sheet | | | | | | | | |
| 7 | | | | | | | | | |
| 8 | **Base Period data is historical Information from the Company's Books and Records.** | | | | | | | | |
| 9 | This schedule is sponsored by PNM Witness Gutierrez | | | | | | | | |
| 10 | **Location** | **Location Number Note 6** | **FERC** | **Loc/ FERC** | **FERC Description** | **Balance 9/1/27** | **Linkage Period Ending Balance 9/30/27** | **Reference** | **Test Period Beginning Balance 10/1/27** |
| 469 | | | | | | | | | |
| 470 | | | | | | | | | |
| 471 | **Gross Plant Distribution Plant** | | | | | | | | |
| 665 | **All - Distribution** | | | | | | | | |
| 666 | | | 360 | | Land and Land Rights | 10,665,306 | 10,684,266 | | 10,684,266 |
| 667 | | | 360.1 | | Land - Right of Way | 4,685,187 | 4,685,187 | | 4,685,187 |
| 668 | | | 361 | | Structures and Improvements | 77,055,053 | 77,223,010 | | 77,223,010 |
| 669 | | | 362 | | Station Equipment | 397,012,590 | 399,903,361 | | 399,903,361 |
| 670 | | | 363.01 | | Computer Hardware | 18,867,721 | 19,714,314 | | 19,714,314 |
| 671 | | | 363.02 | | Computer Software | 84,824,003 | 87,363,782 | | 87,363,782 |
| 672 | | | 363.03 | | Communication Equipment | 34,575,688 | 34,725,676 | | 34,725,676 |
| 673 | | | 364 | | Poles, Towers and Fixtures | 519,444,524 | 520,685,391 | | 520,685,391 |
| 674 | | | 365 | | Overhead Conductors and Devices | 347,794,055 | 348,573,735 | | 348,573,735 |
| 675 | | | 366 | | Underground Conduit | 216,691,716 | 217,492,109 | | 217,492,109 |
| 676 | | | 367 | | Underground Conductors and Devices | 510,560,083 | 511,775,832 | | 511,775,832 |
| 677 | | | 368 | | Line Transformers | 302,897,620 | 303,843,711 | | 303,843,711 |
| 678 | | | 369 | | Services | 109,305,525 | 109,274,375 | | 109,274,375 |
| 679 | | | 369.1 | | Services - Underground | 199,927,191 | 199,910,672 | | 199,910,672 |
| 680 | | | 370 | | Meters Net Plant - PNM | 56,991,554 | 55,481,320 | | 55,481,320 |
| 681 | | | 370.4 | | Meters Net Plant - Grid Mod | 49,343,039 | 54,422,597 | | 54,422,597 |
| 682 | | | 371 | | Installations on Customers' Premises | 9,151,530 | 9,151,530 | | 9,151,530 |
| 683 | | | 371.1 | | Leased Flood Lighting | 307,353 | 307,353 | | 307,353 |
| 684 | | | 373 | | Street Lighting and Signal Systems | 35,937,214 | 36,157,178 | | 36,157,178 |
| 685 | | | 374 | | Asset Retirement Costs - Distribution | - | - | | - |
| 686 | **Total Gross Plant Distribution Plant** | | | | | 2,986,036,952 | 3,001,375,397 | | 3,001,375,397 |
| 687 | | | | | | | | | |

| | A | B | C | D | E | AO | AP | AQ | AR |
|---|---|---|---|---|---|---|---|---|---|
| 1 | **Public Service Company of New Mexico** | | | | | | | | |
| 2 | **Schedule B-3** | | | | | | | | |
| 3 | **Original Cost of Plant In Service by Monthly Balances** | | | | | | | | |
| 4 | **Base Period Ending 6/30/2026** | | | | | | | | |
| 5 | **Test Period Ending 9/30/2028** | | | | | | | | |
| 6 | Link to WP Plant Lead Sheet | | | | | | | | |
| 7 | | | | | | | | | |
| 8 | **Base Period data is historical Information from the Company's Books and Records.** | | | | | | | | |
| 9 | This schedule is sponsored by PNM Witness Gutierrez | | | | | | | | |
| 10 | **Location** | **Location Number Note 6** | **FERC** | **Loc/ FERC** | **FERC Description** | **Balance 9/1/27** | **Linkage Period Ending Balance 9/30/27** | **Reference** | **Test Period Beginning Balance 10/1/27** |
| 688 | | | | | | | | | |
| 689 | **Gross Plant G&I Plant (303,389-399)** | | | | | | | | |
| 719 | **Total General & Intangible Plant** | | | | | | | | |
| 720 | | | 303 | 303 | Miscellaneous Intangible Plant | - | - | | - |
| 721 | | | 389 | 389 | Land and Land Rights | 1,937,568 | 1,937,568 | | 1,937,568 |
| 722 | | | 390 | 390 | Structures and Improvements | 77,645,073 | 77,633,789 | | 77,633,789 |
| 723 | | | 390.1 | 390.1 | Bulk Power Office Building Remodeling | 5,876,652 | 5,874,964 | | 5,874,964 |
| 724 | | | 390.2 | 390.2 | Bulk Power Office Building | 5,945,142 | 5,945,142 | | 5,945,142 |
| 725 | | | 391 | 391 | Office Furniture and Equipment | 5,057,288 | 5,061,286 | | 5,061,286 |
| 726 | | | 391.1 | 391.1 | Office Furniture and Equipment - PC System | - | - | | - |
| 727 | | | 391.2 | 391.2 | Office Furniture and Equipment - PC's | - | - | | - |
| 728 | | | 391.3 | 391.3 | Computer Hardware | - | - | | - |
| 729 | | | 391.5 | 391.5 | Computer Hardware - Solar | - | - | | - |
| 730 | | | 391.7 | 391.7 | Computer Hardware | - | - | | - |
| 731 | | | 392 | 392 | Transportation Equipment - Light | 4,796,243 | 4,794,947 | | 4,794,947 |
| 732 | | | 392.1 | 392.1 | Transportation Equipment - Heavy | 4,829,894 | 4,808,311 | | 4,808,311 |
| 733 | | | 392.2 | 392.2 | Transportation Equipment - Trailers | 8,573,826 | 8,573,552 | | 8,573,552 |
| 734 | | | 392.4 | 392.4 | Transportation Equipment - Leaseback | - | - | | - |
| 735 | | | 393 | 393 | Stores Equipment | 97,939 | 97,939 | | 97,939 |
| 736 | | | 394 | 394 | Tools, Shop & Garage Equipment | 20,642,763 | 20,751,033 | | 20,751,033 |
| 737 | | | 395 | 395 | Laboratory Equipment | 206,265 | 206,265 | | 206,265 |
| 738 | | | 396 | 396 | Power Operated Equipment | 7,484,166 | 7,490,064 | | 7,490,064 |
| 739 | | | 397.01 | 397.01 | Computer Hardware | 860,459 | 860,695 | | 860,695 |
| 740 | | | 397.02 | 397.02 | Computer Software | 34,139,229 | 34,139,229 | | 34,139,229 |
| 741 | | | 397.03 | 397.03 | Communication Equipment | - | - | | - |
| 742 | | | 398 | 398 | Miscellaneous Equipment | 1,823,135 | 1,823,135 | | 1,823,135 |
| 743 | | | 399.1 | 399.1 | ARO General Plant-1 | 19,473 | 19,473 | | 19,473 |
| 744 | **Total Gross Plant G&I Plant - PNM** | | | | | 179,935,115 | 180,017,392 | | 180,017,392 |
| 745 | | | | | | | | | |
| 746 | **Total Electric Plant In Service** | | 101/106 | | | 8,003,867,162 | 8,289,414,014 | | 8,289,414,014 |
| 747 | | | | | | | | | |
| 748 | **Electric Plant Purchased** | | 102 | | | | | | |
| 749 | | | | | | | | | |
| 750 | **Electric Plant Acquisition Adjustment** | | | | Acq. Adj. - Palo Verde Unit 1&2 (Drexel) | - | - | | - |
| 751 | | | | | Acq. Adj. - Palo Verde Unit 2 (First Chicago) | 15,392,992 | 15,323,654 | | 15,323,654 |
| 752 | | | | | Acq. Adj. - (EIP) | - | - | | - |
| 753 | **Electric Plant Acquisition Adjustment** | | 114 | | | 15,392,992 | 15,323,654 | | 15,323,654 |
| 754 | | | | | | | | | |
| 755 | **Total Electric Plant** | | | | | 8,019,260,154 | 8,304,737,668 | | 8,304,737,668 |
| 756 | | | | | | | | | |
| 757 | | | | | | | | | |

| | A | B | C | D | E | AO | AP | AQ | AR |
|---|---|---|---|---|---|---|---|---|---|
| 1 | **Public Service Company of New Mexico** | | | | | | | | |
| 2 | **Schedule B-3** | | | | | | | | |
| 3 | **Original Cost of Plant In Service by Monthly Balances** | | | | | | | | |
| 4 | **Base Period Ending 6/30/2026** | | | | | | | | |
| 5 | **Test Period Ending 9/30/2028** | | | | | | | | |
| 6 | Link to WP Plant Lead Sheet | | | | | | | | |
| 7 | | | | | | | | | |
| 8 | **Base Period data is historical Information from the Company's Books and Records.** | | | | | | | | |
| 9 | This schedule is sponsored by PNM Witness Gutierrez | | | | | | | | |
| 10 | **Location** | **Location Number Note 6** | **FERC** | **Loc/ FERC** | **FERC Description** | **Balance 9/1/27** | **Linkage Period Ending Balance 9/30/27** | **Reference** | **Test Period Beginning Balance 10/1/27** |
| 758 | **Corporate Unallocated** | 900 | 303 | 900303 | Miscellaneous Intangible Plant | - | - | | - |
| 759 | | 900 | 389 | 900389 | Land and Land Rights | 5,133,327 | 5,133,327 | | 5,133,327 |
| 760 | | 900 | 390 | 900390 | Structures and Improvements | 81,409,145 | 82,446,782 | | 82,446,782 |
| 761 | | 900 | 390.1 | 900390.1 | Bulk Power Office Building Remodeling | - | - | | - |
| 762 | | 900 | 390.2 | 900390.2 | Bulk Power Office Building | - | - | | - |
| 763 | | 900 | 391 | 900391 | Office Furniture and Equipment | 1,543,771 | 1,566,333 | | 1,566,333 |
| 764 | | 900 | 391.1 | 900391.1 | Office Furniture and Equipment - PC System | - | - | | - |
| 765 | | 900 | 391.2 | 900391.2 | Office Furniture and Equipment - PC's | - | - | | - |
| 766 | | 900 | 391.3 | 900391.3 | Computer Hardware | - | - | | - |
| 767 | | 900 | 391.5 | 900391.5 | Computer Hardware - Solar | - | - | | - |
| 768 | | 900 | 391.7 | 900391.7 | Computer Hardware | - | - | | - |
| 769 | | 900 | 392 | 900392 | Transportation Equipment - Light | 350,330 | 350,330 | | 350,330 |
| 770 | | 900 | 392.1 | 900392.1 | Transportation Equipment - Heavy | 52,320 | 52,320 | | 52,320 |
| 771 | | 900 | 392.2 | 900392.2 | Transportation Equipment - Trailers | 10,272 | 10,272 | | 10,272 |
| 772 | | 900 | 392.4 | 900392.4 | Transportation Equipment - Leaseback | (168) | (180) | | (180) |
| 773 | | 900 | 393 | 900393 | Stores Equipment | - | - | | - |
| 774 | | 900 | 394 | 900394 | Tools, Shop & Garage Equipment | 412,720 | 412,720 | | 412,720 |
| 775 | | 900 | 395 | 900395 | Laboratory Equipment | - | - | | - |
| 776 | | 900 | 396 | 900396 | Power Operated Equipment | 26,134 | 26,134 | | 26,134 |
| 777 | | 900 | 397 | 900397 | Communication Equipment | - | - | | - |
| 778 | | 900 | 397.01 | 900397.01 | Computer Hardware | 31,383,481 | 31,385,988 | | 31,385,988 |
| 779 | | 900 | 397.02 | 900397.02 | Computer Software | 255,845,568 | 255,845,568 | | 255,845,568 |
| 780 | | 900 | 397.03 | 900397.03 | Communication Equipment | 3,768,504 | 3,768,504 | | 3,768,504 |
| 781 | | 900 | 397.2 | 900397.2 | Communication Equipment | - | - | | - |
| 782 | | 900 | 397.3 | 900397.3 | Communication Equipment | - | - | | - |
| 783 | | 900 | 398 | 900398 | Miscellaneous Equipment | - | - | | - |
| 784 | | 900 | 399.1 | 900399.1 | ARO General Plant-1 | - | - | | - |
| 785 | | | | | | | | | |
| 786 | **Total Corporate Unallocated** | | | | | 379,935,405 | 380,998,099 | | 380,998,099 |
| 787 | | | | | | | | | |
| 788 | **al Electric Plant In Service - with Corporate** | | 101/106 | | | 8,383,802,566 | 8,670,412,112 | | 8,670,412,112 |
| 790 | **Electric Plant Purchased - with Corporate** | | 102 | | | | | | |
| 792 | **Electric Plant Acq. Adj. - with Corporate** | | 114 | | | 15,392,992 | 15,323,654 | | 15,323,654 |
| 793 | | | | | | | | | |
| 794 | **Total Electric Plant - with Corporate** | | | | | 8,399,195,558 | 8,685,735,766 | | 8,685,735,766 |

| | A | B | C | D | E | AS | AT | AU | AV |
|---|---|---|---|---|---|---|---|---|---|
| 1 | **Public Service Company of New Mexico** | | | | | | | | |
| 2 | **Schedule B-3** | | | | | | | | |
| 3 | **Original Cost of Plant In Service by Monthly Balances** | | | | | | | | |
| 4 | **Base Period Ending 6/30/2026** | | | | | | | | |
| 5 | **Test Period Ending 9/30/2028** | | | | | | | | |
| 6 | Link to WP Plant Lead Sheet | | | | | | | | |
| 7 | | | | | | | | | |
| 8 | **Base Period data is historical Information from the Company's Books and Records.** | | | | | | | | |
| 9 | This schedule is sponsored by PNM Witness Gutierrez | | | | | | | | |
| 10 | **Location** | **Location Number Note 6** | **FERC** | **Loc/ FERC** | **FERC Description** | **Balance 11/1/27** | **Balance 12/1/27** | **Balance 1/1/28** | **Balance 2/1/28** |
| 11 | | | | | | | | | |
| 12 | **Production Plant** | | | | | | | | |
| 13 | **Steam Production** | | | | | | | | |
| 56 | **All - Steam** | | | | | | | | |
| 57 | | | 310 | | Land and Land Rights | 618,487 | 618,487 | 618,487 | 618,487 |
| 58 | | | 310.1 | | Land Right of Way | 22,368 | 22,368 | 22,368 | 22,368 |
| 59 | | | 311 | | Structures & Improvements | 32,402,480 | 32,571,569 | 33,755,449 | 34,135,382 |
| 60 | | | 312 | | Boiler Plant Equipment | 260,584,438 | 260,325,520 | 260,382,685 | 260,191,741 |
| 61 | | | 314 | | Turbogenerator Units | 68,599,238 | 68,608,022 | 68,833,073 | 68,888,127 |
| 62 | | | 315 | | Accessory Electric Equipment | 20,336,371 | 20,322,301 | 20,308,231 | 20,294,321 |
| 63 | | | 315.01 | | Computer Hardware | - | - | - | - |
| 64 | | | 315.02 | | Computer Software | 1,362,246 | 1,362,246 | 1,362,246 | 1,362,246 |
| 65 | | | 315.03 | | Communication Equipment | 334,053 | 334,053 | 334,053 | 334,053 |
| 66 | | | 316 | | Misc Power Plant Equipment | 28,065,665 | 28,022,933 | 27,980,201 | 27,938,108 |
| 67 | | | 317 | | Asset Retirement Costs - Steam | 10,249,476 | 10,249,476 | 10,249,476 | 10,249,476 |
| 68 | **Total Steam Production Gross Plant** | | | | | 422,574,821 | 422,436,975 | 423,846,268 | 424,034,308 |
| 69 | | | | | | | | | |
| 70 | | | | | | | | | |
| 71 | **Nuclear Production** | | | | | | | | |
| 129 | **All - Nuclear** | | | | | | | | |
| 130 | | | 320 | | Land and Land Rights | 439,822 | 439,822 | 439,822 | 439,822 |
| 131 | | | 320.1 | | Land - Right of Way | 44,622 | 44,622 | 44,622 | 44,622 |
| 132 | | | 321 | | Structures and Improvements | 208,543,829 | 208,554,673 | 211,021,626 | 211,202,986 |
| 133 | | | 322 | | Reactor Plant Equipment | 346,706,211 | 346,763,165 | 357,872,605 | 358,696,880 |
| 134 | | | 323 | | Turbogenerator Units | 114,313,324 | 114,271,671 | 114,230,018 | 114,188,365 |
| 135 | | | 324 | | Accessory Electric Equipment | 60,765,893 | 60,756,177 | 60,746,461 | 60,736,745 |
| 136 | | | 324.01 | | Computer Hardware | - | - | - | - |
| 137 | | | 324.02 | | Computer Software | 14,220,875 | 14,232,922 | 15,297,587 | 15,382,712 |
| 138 | | | 324.03 | | Communication Equipment | 595,882 | 597,890 | 775,334 | 789,522 |
| 139 | | | 325 | | Misc Power Plant Equipment | 74,065,850 | 74,096,364 | 76,933,859 | 77,159,248 |
| 140 | | | 326 | | Asset Retirement Costs Nuclear Prod Plant | - | - | - | - |
| 141 | **Total Nuclear Production Gross Plant** | | | | | 819,696,309 | 819,757,307 | 837,361,933 | 838,640,903 |

| | A | B | C | D | E | AS | AT | AU | AV |
|---|---|---|---|---|---|---|---|---|---|
| 1 | **Public Service Company of New Mexico** | | | | | | | | |
| 2 | **Schedule B-3** | | | | | | | | |
| 3 | **Original Cost of Plant In Service by Monthly Balances** | | | | | | | | |
| 4 | **Base Period Ending 6/30/2026** | | | | | | | | |
| 5 | **Test Period Ending 9/30/2028** | | | | | | | | |
| 6 | Link to WP Plant Lead Sheet | | | | | | | | |
| 7 | | | | | | | | | |
| 8 | **Base Period data is historical Information from the Company's Books and Records.** | | | | | | | | |
| 9 | This schedule is sponsored by PNM Witness Gutierrez | | | | | | | | |
| 10 | **Location** | **Location Number Note 6** | **FERC** | **Loc/ FERC** | **FERC Description** | **Balance 11/1/27** | **Balance 12/1/27** | **Balance 1/1/28** | **Balance 2/1/28** |
| 142 | | | | | | | | | |
| 143 | | | | | | | | | |
| 144 | **Solar Production** | | | | | | | | |
| 237 | **All - Solar** | | | | | | | | |
| 238 | | | 338.01 | | Land & Land Rights | 11,040,948 | 11,040,948 | 11,040,948 | 11,040,948 |
| 239 | | | 338.02 | | Structures and Improvements | 268,299 | 268,299 | 268,299 | 268,299 |
| 240 | | | 338.04 | | Solar Panels | 437,158,839 | 437,158,839 | 440,961,518 | 440,961,518 |
| 241 | | | 338.05 | | Collector System | 8,264,812 | 8,264,812 | 8,264,812 | 8,264,812 |
| 242 | | | 338.07 | | Solar Inverters | 10,127,593 | 10,127,593 | 10,127,593 | 10,127,593 |
| 243 | | | 338.08 | | Other Accessory Electrical Equipment | 23,775,507 | 23,775,507 | 23,775,507 | 23,775,507 |
| 244 | | | 338.09 | | Computer Hardware | 51,760 | 51,760 | 51,760 | 51,760 |
| 245 | | | 338.10 | | Computer Software | - | - | - | - |
| 246 | | | 338.11 | | Communication Equipment | 637,577 | 637,577 | 637,577 | 637,577 |
| 247 | | | 338.12 | | Misc. Power Plant Equipment | 5,228,178 | 5,228,178 | 5,228,178 | 5,228,178 |
| 248 | **Total Solar Production Gross Plant** | | | | | 496,553,513 | 496,553,513 | 500,356,192 | 500,356,192 |
| 249 | | | | | | | | | |
| 250 | **Other Production** | | | | | | | | |
| 251 | | | | | | | | | |
| 252 | **Other Production - Gas:** | | | | | | | | |
| 339 | **All - Gas** | | 340 | | Land and Land Rights | 7,079,884 | 7,079,884 | 7,079,884 | 7,079,884 |
| 340 | | | 340.1 | | Land - Right of Way | 1,959,313 | 1,959,313 | 1,959,313 | 1,959,313 |
| 341 | | | 341 | | Structures and Improvements | 95,311,777 | 95,273,948 | 95,240,877 | 95,203,048 |
| 342 | | | 342 | | Fuel Holders, Producers, Accessories | 130,064,040 | 130,281,551 | 130,435,938 | 130,428,021 |
| 343 | | | 343 | | Prime Movers | - | - | - | - |
| 344 | | | 344 | | Generators | 261,862,103 | 264,293,034 | 268,168,828 | 268,091,873 |
| 345 | | | 345 | | Accessory Electric Equipment | 27,732,877 | 27,783,491 | 27,906,780 | 27,872,859 |
| 346 | | | 345.01 | | Computer Hardware | - | - | - | - |
| 347 | | | 345.02 | | Computer Software | 60,931 | 60,931 | 60,931 | 60,931 |
| 348 | | | 345.03 | | Communication Equipment | 38,862 | 38,862 | 38,862 | 38,862 |
| 349 | | | 346 | | Misc Power Plant Equipment | 49,347,123 | 50,662,740 | 50,683,504 | 50,666,212 |
| 350 | | | 347 | | Asset Retirement Costs - Other Production | 7,008,573 | 7,008,573 | 7,008,573 | 7,008,573 |
| 351 | **Total Other Production Plant - Gas** | | | | | 580,465,484 | 584,442,328 | 588,583,491 | 588,409,577 |
| 352 | | | | | | | | | |
| 353 | | | | | | | | | |
| 354 | **Total Other Production Gross Plant** | | | | | 580,465,484 | 584,442,328 | 588,583,491 | 588,409,577 |
| 355 | | | | | | | | | |
| 356 | **Total Gross Plant Production** | | | | | 2,319,290,127 | 2,323,190,123 | 2,350,147,884 | 2,351,440,980 |
| 357 | | | | | | | | | |
| 358 | | | | | | | | | |

| | A | B | C | D | E | AS | AT | AU | AV |
|---|---|---|---|---|---|---|---|---|---|
| 1 | **Public Service Company of New Mexico** | | | | | | | | |
| 2 | **Schedule B-3** | | | | | | | | |
| 3 | **Original Cost of Plant In Service by Monthly Balances** | | | | | | | | |
| 4 | **Base Period Ending 6/30/2026** | | | | | | | | |
| 5 | **Test Period Ending 9/30/2028** | | | | | | | | |
| 6 | Link to WP Plant Lead Sheet | | | | | | | | |
| 7 | | | | | | | | | |
| 8 | **Base Period data is historical Information from the Company's Books and Records.** | | | | | | | | |
| 9 | This schedule is sponsored by PNM Witness Gutierrez | | | | | | | | |
| 10 | **Location** | **Location Number Note 6** | **FERC** | **Loc/ FERC** | **FERC Description** | **Balance 11/1/27** | **Balance 12/1/27** | **Balance 1/1/28** | **Balance 2/1/28** |
| 359 | **Total Gross Energy Storage Plant** | | | | | | | | |
| 386 | **All - Energy Storage** | | 387.01 | 387.01 | Land & Land Rights | - | - | - | - |
| 387 | | | 387.02 | 387.02 | Structures & Improvements | 23,176,806 | 23,176,806 | 23,176,806 | 23,176,806 |
| 388 | | | 387.03 | 387.03 | Energy Storage Equipment | 208,308,122 | 208,308,122 | 210,447,129 | 210,447,129 |
| 389 | | | 387.05 | 387.05 | Collector System | 25,624,069 | 25,624,069 | 25,624,069 | 25,624,069 |
| 390 | | | 387.06 | 387.06 | Generator Step-Up Transformers (GSU) | 59,151,201 | 59,151,201 | 59,151,201 | 59,151,201 |
| 391 | | | 387.07 | 387.07 | Inverters | - | - | - | - |
| 392 | | | 387.08 | 387.08 | Computer Hardware | 5,348,140 | 5,348,140 | 5,348,140 | 5,348,140 |
| 393 | | | 387.09 | 387.09 | Computer Software | 965,150 | 965,150 | 965,150 | 965,150 |
| 394 | | | 387.10 | 387.10 | Communication Equipment | 1,233,478 | 1,233,478 | 1,233,478 | 1,233,478 |
| 395 | | | 387.11 | 387.11 | Misc. Energy Storage Equipment | 7,837,251 | 7,837,251 | 7,837,251 | 7,837,251 |
| 396 | | | 387.12 | 387.12 | Asset Retirement Costs for Energy Storage | - | - | - | - |
| 397 | **Total Gross Energy Storage Plant** | | | | | 331,644,216 | 331,644,216 | 333,783,222 | 333,783,222 |
| 398 | | | | | | | | | |
| 399 | | | | | | | | | |
| 400 | **Gross Plant Transmission Plant** | | | | | | | | |
| 401 | | | | | | | | | |
| 402 | | | | | | | | | |
| 453 | **All - Transmission** | | | | | | | | |
| 454 | | 650 | 350 | 650350 | Land and Land Rights | 83,233,231 | 83,233,231 | 83,581,374 | 83,581,374 |
| 455 | | 650 | 350.1 | 650350.1 | Land - Right of Way | 53,981,918 | 53,981,918 | 54,011,193 | 54,011,193 |
| 456 | | 650 | 351.01 | 650350.01 | Computer Hardware | 18,118,262 | 18,140,050 | 18,928,684 | 18,951,234 |
| 457 | | 650 | 351.02 | 650350.02 | Computer Software | 10,027,103 | 10,027,103 | 10,027,103 | 10,027,103 |
| 458 | | 650 | 351.03 | 650350.03 | Communication Equipment | 53,145,552 | 53,189,128 | 54,976,610 | 55,021,711 |
| 459 | | 650 | 352 | 650352 | Structures and Improvements | 271,474,796 | 271,637,642 | 279,451,183 | 279,620,321 |
| 460 | | 650 | 353 | 650353 | Station Equipment | 1,072,443,003 | 1,072,453,837 | 1,091,371,519 | 1,096,096,936 |
| 461 | | 650 | 353.1 | 650353.1 | Station Equipment - Step-up Xfmr and Aux | 12,233,285 | 12,229,425 | 12,225,565 | 12,221,812 |
| 462 | | 650 | 354 | 650354 | Towers and Fixtures | 64,109,166 | 64,084,371 | 64,059,576 | 64,475,458 |
| 463 | | 650 | 355 | 650355 | Poles and Fixtures | 569,890,098 | 569,817,107 | 573,769,052 | 574,083,178 |
| 464 | | 650 | 356 | 650356 | Overhead Conductors and Devices | 239,356,810 | 239,361,869 | 242,742,058 | 242,747,880 |
| 465 | | 650 | 357 | 650357 | Underground Conduit | 733,196 | 733,196 | 733,196 | 733,196 |
| 466 | | 650 | 359 | 650359 | Roads and Trails | 9,799,054 | 9,798,958 | 9,798,862 | 9,798,766 |
| 467 | **Total Gross Plant Transmission Plant** | | | | | 2,458,545,475 | 2,458,687,836 | 2,495,675,975 | 2,501,370,162 |
| 468 | | | | | | | | | |

| | A | B | C | D | E | AS | AT | AU | AV |
|---|---|---|---|---|---|---|---|---|---|
| 1 | **Public Service Company of New Mexico** | | | | | | | | |
| 2 | **Schedule B-3** | | | | | | | | |
| 3 | **Original Cost of Plant In Service by Monthly Balances** | | | | | | | | |
| 4 | **Base Period Ending 6/30/2026** | | | | | | | | |
| 5 | **Test Period Ending 9/30/2028** | | | | | | | | |
| 6 | Link to WP Plant Lead Sheet | | | | | | | | |
| 7 | | | | | | | | | |
| 8 | **Base Period data is historical Information from the Company's Books and Records.** | | | | | | | | |
| 9 | This schedule is sponsored by PNM Witness Gutierrez | | | | | | | | |
| 10 | **Location** | **Location Number Note 6** | **FERC** | **Loc/ FERC** | **FERC Description** | **Balance 11/1/27** | **Balance 12/1/27** | **Balance 1/1/28** | **Balance 2/1/28** |
| 469 | | | | | | | | | |
| 470 | | | | | | | | | |
| 471 | **Gross Plant Distribution Plant** | | | | | | | | |
| 665 | **All - Distribution** | | | | | | | | |
| 666 | | | 360 | | Land and Land Rights | 10,704,857 | 10,704,857 | 10,718,584 | 10,718,584 |
| 667 | | | 360.1 | | Land - Right of Way | 4,685,187 | 4,685,187 | 4,685,187 | 4,685,187 |
| 668 | | | 361 | | Structures and Improvements | 77,260,862 | 77,277,555 | 79,567,368 | 79,577,727 |
| 669 | | | 362 | | Station Equipment | 400,136,240 | 400,199,212 | 410,671,529 | 411,010,593 |
| 670 | | | 363.01 | | Computer Hardware | 20,273,338 | 20,832,454 | 24,234,089 | 25,048,913 |
| 671 | | | 363.02 | | Computer Software | 89,040,856 | 90,718,203 | 105,549,668 | 107,994,140 |
| 672 | | | 363.03 | | Communication Equipment | 34,876,836 | 34,878,096 | 44,244,155 | 44,637,064 |
| 673 | | | 364 | | Poles, Towers and Fixtures | 522,324,463 | 523,759,135 | 535,692,180 | 537,609,015 |
| 674 | | | 365 | | Overhead Conductors and Devices | 349,461,565 | 349,939,494 | 355,801,193 | 359,593,738 |
| 675 | | | 366 | | Underground Conduit | 218,656,087 | 219,796,317 | 223,751,129 | 226,288,920 |
| 676 | | | 367 | | Underground Conductors and Devices | 513,418,852 | 514,982,362 | 523,677,957 | 526,633,285 |
| 677 | | | 368 | | Line Transformers | 304,824,863 | 305,811,100 | 308,421,355 | 309,307,560 |
| 678 | | | 369 | | Services | 110,691,593 | 110,660,443 | 111,473,160 | 111,442,010 |
| 679 | | | 369.1 | | Services - Underground | 204,480,652 | 204,464,133 | 207,119,858 | 207,103,339 |
| 680 | | | 370 | | Meters Net Plant - PNM | 54,214,839 | 52,922,130 | 51,183,229 | 49,500,447 |
| 681 | | | 370.4 | | Meters Net Plant - Grid Mod | 57,776,745 | 61,131,438 | 66,696,821 | 71,585,766 |
| 682 | | | 371 | | Installations on Customers' Premises | 9,151,530 | 9,151,530 | 9,151,530 | 9,151,530 |
| 683 | | | 371.1 | | Leased Flood Lighting | 307,353 | 307,353 | 307,353 | 307,353 |
| 684 | | | 373 | | Street Lighting and Signal Systems | 36,457,164 | 36,769,103 | 39,142,457 | 39,415,029 |
| 685 | | | 374 | | Asset Retirement Costs - Distribution | - | - | - | - |
| 686 | **Total Gross Plant Distribution Plant** | | | | | 3,018,743,883 | 3,028,990,103 | 3,112,088,803 | 3,131,610,199 |
| 687 | | | | | | | | | |

| | A | B | C | D | E | AS | AT | AU | AV |
|---|---|---|---|---|---|---|---|---|---|
| 1 | **Public Service Company of New Mexico** | | | | | | | | |
| 2 | **Schedule B-3** | | | | | | | | |
| 3 | **Original Cost of Plant In Service by Monthly Balances** | | | | | | | | |
| 4 | **Base Period Ending 6/30/2026** | | | | | | | | |
| 5 | **Test Period Ending 9/30/2028** | | | | | | | | |
| 6 | Link to WP Plant Lead Sheet | | | | | | | | |
| 7 | | | | | | | | | |
| 8 | **Base Period data is historical Information from the Company's Books and Records.** | | | | | | | | |
| 9 | This schedule is sponsored by PNM Witness Gutierrez | | | | | | | | |
| 10 | **Location** | **Location Number Note 6** | **FERC** | **Loc/ FERC** | **FERC Description** | **Balance 11/1/27** | **Balance 12/1/27** | **Balance 1/1/28** | **Balance 2/1/28** |
| 688 | | | | | | | | | |
| 689 | **Gross Plant G&I Plant (303,389-399)** | | | | | | | | |
| 719 | **Total General & Intangible Plant** | | | | | | | | |
| 720 | | | 303 | 303 | Miscellaneous Intangible Plant | - | - | - | - |
| 721 | | | 389 | 389 | Land and Land Rights | 1,937,568 | 1,937,568 | 1,937,568 | 1,937,568 |
| 722 | | | 390 | 390 | Structures and Improvements | 77,747,656 | 77,715,573 | 79,063,159 | 79,031,076 |
| 723 | | | 390.1 | 390.1 | Bulk Power Office Building Remodeling | 5,872,803 | 5,870,642 | 5,868,954 | 5,866,793 |
| 724 | | | 390.2 | 390.2 | Bulk Power Office Building | 5,945,142 | 5,945,142 | 5,945,142 | 5,945,142 |
| 725 | | | 391 | 391 | Office Furniture and Equipment | 5,064,242 | 5,064,242 | 5,064,178 | 5,064,178 |
| 726 | | | 391.1 | 391.1 | Office Furniture and Equipment - PC System | - | - | - | - |
| 727 | | | 391.2 | 391.2 | Office Furniture and Equipment - PC's | - | - | - | - |
| 728 | | | 391.3 | 391.3 | Computer Hardware | - | - | - | - |
| 729 | | | 391.5 | 391.5 | Computer Hardware - Solar | - | - | - | - |
| 730 | | | 391.7 | 391.7 | Computer Hardware | - | - | - | - |
| 731 | | | 392 | 392 | Transportation Equipment - Light | 4,808,725 | 4,847,130 | 5,278,531 | 5,275,712 |
| 732 | | | 392.1 | 392.1 | Transportation Equipment - Heavy | 4,786,728 | 4,765,145 | 4,921,957 | 4,900,374 |
| 733 | | | 392.2 | 392.2 | Transportation Equipment - Trailers | 8,573,278 | 8,573,004 | 8,667,941 | 8,667,667 |
| 734 | | | 392.4 | 392.4 | Transportation Equipment - Leaseback | - | - | - | - |
| 735 | | | 393 | 393 | Stores Equipment | 97,939 | 97,939 | 97,939 | 97,939 |
| 736 | | | 394 | 394 | Tools, Shop & Garage Equipment | 20,787,706 | 20,787,706 | 20,966,739 | 20,966,739 |
| 737 | | | 395 | 395 | Laboratory Equipment | 206,265 | 206,265 | 206,265 | 206,265 |
| 738 | | | 396 | 396 | Power Operated Equipment | 7,491,853 | 7,491,583 | 7,553,753 | 7,553,483 |
| 739 | | | 397.01 | 397.01 | Computer Hardware | 860,695 | 860,695 | 860,931 | 860,931 |
| 740 | | | 397.02 | 397.02 | Computer Software | 34,139,229 | 49,374,477 | 51,358,469 | 51,358,469 |
| 741 | | | 397.03 | 397.03 | Communication Equipment | - | - | - | - |
| 742 | | | 398 | 398 | Miscellaneous Equipment | 1,823,135 | 1,823,135 | 1,815,316 | 1,815,316 |
| 743 | | | 399.1 | 399.1 | ARO General Plant-1 | 19,473 | 19,473 | 19,473 | 19,473 |
| 744 | **Total Gross Plant G&I Plant - PNM** | | | | | 180,162,438 | 195,379,720 | 199,626,315 | 199,567,125 |
| 745 | | | | | | | | | |
| 746 | **Total Electric Plant In Service** | | 101/106 | | | 8,308,386,138 | 8,337,891,998 | 8,491,322,199 | 8,517,771,689 |
| 747 | | | | | | | | | |
| 748 | **Electric Plant Purchased** | | 102 | | | | | | |
| 749 | | | | | | | | | |
| 750 | **Electric Plant Acquisition Adjustment** | | | | Acq. Adj. - Palo Verde Unit 1&2 (Drexel) | - | - | - | - |
| 751 | | | | | Acq. Adj. - Palo Verde Unit 2 (First Chicago) | 15,254,317 | 15,184,979 | 15,115,641 | 15,046,303 |
| 752 | | | | | Acq. Adj. - (EIP) | - | - | - | - |
| 753 | **Electric Plant Acquisition Adjustment** | | 114 | | | 15,254,317 | 15,184,979 | 15,115,641 | 15,046,303 |
| 754 | | | | | | | | | |
| 755 | **Total Electric Plant** | | | | | 8,323,640,455 | 8,353,076,977 | 8,506,437,840 | 8,532,817,992 |
| 756 | | | | | | | | | |
| 757 | | | | | | | | | |

| | A | B | C | D | E | AS | AT | AU | AV |
|---|---|---|---|---|---|---|---|---|---|
| 1 | **Public Service Company of New Mexico** | | | | | | | | |
| 2 | **Schedule B-3** | | | | | | | | |
| 3 | **Original Cost of Plant In Service by Monthly Balances** | | | | | | | | |
| 4 | **Base Period Ending 6/30/2026** | | | | | | | | |
| 5 | **Test Period Ending 9/30/2028** | | | | | | | | |
| 6 | Link to WP Plant Lead Sheet | | | | | | | | |
| 7 | | | | | | | | | |
| 8 | **Base Period data is historical Information from the Company's Books and Records.** | | | | | | | | |
| 9 | This schedule is sponsored by PNM Witness Gutierrez | | | | | | | | |
| 10 | **Location** | **Location Number Note 6** | **FERC** | **Loc/ FERC** | **FERC Description** | **Balance 11/1/27** | **Balance 12/1/27** | **Balance 1/1/28** | **Balance 2/1/28** |
| 758 | **Corporate Unallocated** | 900 | 303 | 900303 | Miscellaneous Intangible Plant | - | - | - | - |
| 759 | | 900 | 389 | 900389 | Land and Land Rights | 5,133,327 | 5,133,327 | 5,133,327 | 5,133,327 |
| 760 | | 900 | 390 | 900390 | Structures and Improvements | 82,569,514 | 82,524,178 | 84,976,895 | 84,931,559 |
| 761 | | 900 | 390.1 | 900390.1 | Bulk Power Office Building Remodeling | - | - | - | - |
| 762 | | 900 | 390.2 | 900390.2 | Bulk Power Office Building | - | - | - | - |
| 763 | | 900 | 391 | 900391 | Office Furniture and Equipment | 1,907,818 | 1,911,651 | 2,161,765 | 2,161,765 |
| 764 | | 900 | 391.1 | 900391.1 | Office Furniture and Equipment - PC System | - | - | - | - |
| 765 | | 900 | 391.2 | 900391.2 | Office Furniture and Equipment - PC's | - | - | - | - |
| 766 | | 900 | 391.3 | 900391.3 | Computer Hardware | - | - | - | - |
| 767 | | 900 | 391.5 | 900391.5 | Computer Hardware - Solar | - | - | - | - |
| 768 | | 900 | 391.7 | 900391.7 | Computer Hardware | - | - | - | - |
| 769 | | 900 | 392 | 900392 | Transportation Equipment - Light | 350,330 | 350,330 | 350,330 | 350,330 |
| 770 | | 900 | 392.1 | 900392.1 | Transportation Equipment - Heavy | 52,320 | 52,320 | 52,320 | 52,320 |
| 771 | | 900 | 392.2 | 900392.2 | Transportation Equipment - Trailers | 10,272 | 10,272 | 10,272 | 10,272 |
| 772 | | 900 | 392.4 | 900392.4 | Transportation Equipment - Leaseback | (192) | (204) | (216) | (228) |
| 773 | | 900 | 393 | 900393 | Stores Equipment | - | - | - | - |
| 774 | | 900 | 394 | 900394 | Tools, Shop & Garage Equipment | 436,729 | 436,729 | 436,729 | 436,729 |
| 775 | | 900 | 395 | 900395 | Laboratory Equipment | - | - | - | - |
| 776 | | 900 | 396 | 900396 | Power Operated Equipment | 26,134 | 26,134 | 26,134 | 26,134 |
| 777 | | 900 | 397 | 900397 | Communication Equipment | - | - | - | - |
| 778 | | 900 | 397.01 | 900397.01 | Computer Hardware | 31,459,915 | 31,532,745 | 31,057,381 | 31,057,381 |
| 779 | | 900 | 397.02 | 900397.02 | Computer Software | 274,037,961 | 274,344,612 | 298,127,981 | 298,127,981 |
| 780 | | 900 | 397.03 | 900397.03 | Communication Equipment | 3,768,504 | 3,768,504 | 3,768,504 | 3,768,504 |
| 781 | | 900 | 397.2 | 900397.2 | Communication Equipment | - | - | - | - |
| 782 | | 900 | 397.3 | 900397.3 | Communication Equipment | - | - | - | - |
| 783 | | 900 | 398 | 900398 | Miscellaneous Equipment | - | - | - | - |
| 784 | | 900 | 399.1 | 900399.1 | ARO General Plant-1 | - | - | - | - |
| 785 | | | | | | | | | |
| 786 | **Total Corporate Unallocated** | | | | | 399,752,634 | 400,090,599 | 426,101,424 | 426,056,076 |
| 787 | | | | | | | | | |
| 788 | **al Electric Plant In Service - with Corporate** | | 101/106 | | | 8,708,138,772 | 8,737,982,597 | 8,917,423,624 | 8,943,827,765 |
| 790 | **Electric Plant Purchased - with Corporate** | | 102 | | | | | | |
| 792 | **Electric Plant Acq. Adj. - with Corporate** | | 114 | | | 15,254,317 | 15,184,979 | 15,115,641 | 15,046,303 |
| 793 | | | | | | | | | |
| 794 | **Total Electric Plant - with Corporate** | | | | | 8,723,393,088 | 8,753,167,576 | 8,932,539,265 | 8,958,874,068 |

| | A | B | C | D | E | AW | AX | AY | AZ |
|---|---|---|---|---|---|---|---|---|---|
| 1 | **Public Service Company of New Mexico** | | | | | | | | |
| 2 | **Schedule B-3** | | | | | | | | |
| 3 | **Original Cost of Plant In Service by Monthly Balances** | | | | | | | | |
| 4 | **Base Period Ending 6/30/2026** | | | | | | | | |
| 5 | **Test Period Ending 9/30/2028** | | | | | | | | |
| 6 | Link to WP Plant Lead Sheet | | | | | | | | |
| 7 | | | | | | | | | |
| 8 | **Base Period data is historical Information from the Company's Books and Records.** | | | | | | | | |
| 9 | This schedule is sponsored by PNM Witness Gutierrez | | | | | | | | |
| 10 | **Location** | **Location Number Note 6** | **FERC** | **Loc/ FERC** | **FERC Description** | **Balance 3/1/28** | **Balance 4/1/28** | **Balance 5/1/28** | **Balance 6/1/28** |
| 11 | | | | | | | | | |
| 12 | **Production Plant** | | | | | | | | |
| 13 | **Steam Production** | | | | | | | | |
| 56 | **All - Steam** | | | | | | | | |
| 57 | | | 310 | | Land and Land Rights | 618,487 | 618,487 | 618,487 | 618,487 |
| 58 | | | 310.1 | | Land Right of Way | 22,368 | 22,368 | 22,368 | 22,368 |
| 59 | | | 311 | | Structures & Improvements | 34,132,549 | 34,541,292 | 35,179,265 | 38,151,819 |
| 60 | | | 312 | | Boiler Plant Equipment | 259,879,273 | 261,630,977 | 263,085,925 | 263,700,217 |
| 61 | | | 314 | | Turbogenerator Units | 68,860,272 | 70,044,244 | 71,063,301 | 71,669,545 |
| 62 | | | 315 | | Accessory Electric Equipment | 20,280,251 | 20,400,633 | 20,495,448 | 20,481,378 |
| 63 | | | 315.01 | | Computer Hardware | - | - | - | - |
| 64 | | | 315.02 | | Computer Software | 1,362,246 | 1,362,246 | 1,362,246 | 1,362,246 |
| 65 | | | 315.03 | | Communication Equipment | 334,053 | 334,053 | 334,053 | 334,053 |
| 66 | | | 316 | | Misc Power Plant Equipment | 27,895,376 | 28,390,456 | 28,783,262 | 28,740,530 |
| 67 | | | 317 | | Asset Retirement Costs - Steam | 10,249,476 | 10,249,476 | 10,249,476 | 10,249,476 |
| 68 | **Total Steam Production Gross Plant** | | | | | 423,634,350 | 427,594,231 | 431,193,831 | 435,330,119 |
| 69 | | | | | | | | | |
| 70 | | | | | | | | | |
| 71 | **Nuclear Production** | | | | | | | | |
| 129 | **All - Nuclear** | | | | | | | | |
| 130 | | | 320 | | Land and Land Rights | 439,822 | 439,822 | 439,822 | 439,822 |
| 131 | | | 320.1 | | Land - Right of Way | 44,622 | 44,622 | 44,622 | 44,622 |
| 132 | | | 321 | | Structures and Improvements | 211,226,379 | 211,217,179 | 211,550,537 | 211,545,471 |
| 133 | | | 322 | | Reactor Plant Equipment | 358,810,301 | 358,777,056 | 360,285,320 | 360,270,677 |
| 134 | | | 323 | | Turbogenerator Units | 114,146,712 | 114,105,059 | 114,063,406 | 114,021,753 |
| 135 | | | 324 | | Accessory Electric Equipment | 60,727,029 | 60,717,313 | 60,707,597 | 60,697,881 |
| 136 | | | 324.01 | | Computer Hardware | - | - | - | - |
| 137 | | | 324.02 | | Computer Software | 15,400,137 | 15,403,593 | 15,553,860 | 15,559,088 |
| 138 | | | 324.03 | | Communication Equipment | 792,426 | 793,002 | 818,046 | 818,918 |
| 139 | | | 325 | | Misc Power Plant Equipment | 77,204,103 | 77,211,710 | 77,610,811 | 77,623,141 |
| 140 | | | 326 | | Asset Retirement Costs Nuclear Prod Plant | - | - | - | - |
| 141 | **Total Nuclear Production Gross Plant** | | | | | 838,791,531 | 838,709,356 | 841,074,021 | 841,021,374 |

| | A | B | C | D | E | AW | AX | AY | AZ |
|---|---|---|---|---|---|---|---|---|---|
| 1 | **Public Service Company of New Mexico** | | | | | | | | |
| 2 | **Schedule B-3** | | | | | | | | |
| 3 | **Original Cost of Plant In Service by Monthly Balances** | | | | | | | | |
| 4 | **Base Period Ending 6/30/2026** | | | | | | | | |
| 5 | **Test Period Ending 9/30/2028** | | | | | | | | |
| 6 | Link to WP Plant Lead Sheet | | | | | | | | |
| 7 | | | | | | | | | |
| 8 | **Base Period data is historical Information from the Company's Books and Records.** | | | | | | | | |
| 9 | This schedule is sponsored by PNM Witness Gutierrez | | | | | | | | |
| 10 | **Location** | **Location Number Note 6** | **FERC** | **Loc/ FERC** | **FERC Description** | **Balance 3/1/28** | **Balance 4/1/28** | **Balance 5/1/28** | **Balance 6/1/28** |
| 142 | | | | | | | | | |
| 143 | | | | | | | | | |
| 144 | **Solar Production** | | | | | | | | |
| 237 | **All - Solar** | | | | | | | | |
| 238 | | | 338.01 | | Land & Land Rights | 11,040,948 | 11,040,948 | 11,040,948 | 11,040,948 |
| 239 | | | 338.02 | | Structures and Improvements | 268,299 | 268,299 | 268,299 | 268,299 |
| 240 | | | 338.04 | | Solar Panels | 440,961,518 | 440,961,518 | 440,961,518 | 440,961,518 |
| 241 | | | 338.05 | | Collector System | 8,264,812 | 8,264,812 | 8,264,812 | 8,264,812 |
| 242 | | | 338.07 | | Solar Inverters | 10,127,593 | 10,127,593 | 10,127,593 | 10,127,593 |
| 243 | | | 338.08 | | Other Accessory Electrical Equipment | 23,775,507 | 23,775,507 | 23,775,507 | 23,775,507 |
| 244 | | | 338.09 | | Computer Hardware | 51,760 | 51,760 | 51,760 | 51,760 |
| 245 | | | 338.10 | | Computer Software | - | - | - | - |
| 246 | | | 338.11 | | Communication Equipment | 637,577 | 637,577 | 637,577 | 637,577 |
| 247 | | | 338.12 | | Misc. Power Plant Equipment | 5,228,178 | 5,228,178 | 5,228,178 | 5,228,178 |
| 248 | **Total Solar Production Gross Plant** | | | | | 500,356,192 | 500,356,192 | 500,356,192 | 500,356,192 |
| 249 | | | | | | | | | |
| 250 | **Other Production** | | | | | | | | |
| 251 | | | | | | | | | |
| 252 | **Other Production - Gas:** | | | | | | | | |
| 339 | **All - Gas** | | 340 | | Land and Land Rights | 7,079,884 | 7,079,884 | 7,079,884 | 7,079,884 |
| 340 | | | 340.1 | | Land - Right of Way | 1,959,313 | 1,959,313 | 1,959,313 | 1,959,313 |
| 341 | | | 341 | | Structures and Improvements | 95,165,219 | 95,135,144 | 95,435,383 | 95,421,349 |
| 342 | | | 342 | | Fuel Holders, Producers, Accessories | 130,420,104 | 130,442,733 | 130,829,228 | 130,857,003 |
| 343 | | | 343 | | Prime Movers | - | - | - | - |
| 344 | | | 344 | | Generators | 268,014,918 | 268,285,494 | 272,828,798 | 272,811,329 |
| 345 | | | 345 | | Accessory Electric Equipment | 27,838,938 | 27,855,523 | 28,103,325 | 28,069,404 |
| 346 | | | 345.01 | | Computer Hardware | - | - | - | - |
| 347 | | | 345.02 | | Computer Software | 60,931 | 60,931 | 60,931 | 60,931 |
| 348 | | | 345.03 | | Communication Equipment | 38,862 | 38,862 | 38,862 | 38,862 |
| 349 | | | 346 | | Misc Power Plant Equipment | 50,648,920 | 50,634,800 | 50,657,312 | 51,048,817 |
| 350 | | | 347 | | Asset Retirement Costs - Other Production | 7,008,573 | 7,008,573 | 7,008,573 | 7,008,573 |
| 351 | **Total Other Production Plant - Gas** | | | | | 588,235,663 | 588,501,257 | 594,001,611 | 594,355,465 |
| 352 | | | | | | | | | |
| 353 | | | | | | | | | |
| 354 | **Total Other Production Gross Plant** | | | | | 588,235,663 | 588,501,257 | 594,001,611 | 594,355,465 |
| 355 | | | | | | | | | |
| 356 | **Total Gross Plant Production** | | | | | 2,351,017,736 | 2,355,161,036 | 2,366,625,655 | 2,371,063,150 |
| 357 | | | | | | | | | |
| 358 | | | | | | | | | |

| | A | B | C | D | E | AW | AX | AY | AZ |
|---|---|---|---|---|---|---|---|---|---|
| 1 | **Public Service Company of New Mexico** | | | | | | | | |
| 2 | **Schedule B-3** | | | | | | | | |
| 3 | **Original Cost of Plant In Service by Monthly Balances** | | | | | | | | |
| 4 | **Base Period Ending 6/30/2026** | | | | | | | | |
| 5 | **Test Period Ending 9/30/2028** | | | | | | | | |
| 6 | Link to WP Plant Lead Sheet | | | | | | | | |
| 7 | | | | | | | | | |
| 8 | **Base Period data is historical Information from the Company's Books and Records.** | | | | | | | | |
| 9 | This schedule is sponsored by PNM Witness Gutierrez | | | | | | | | |
| 10 | **Location** | **Location Number Note 6** | **FERC** | **Loc/ FERC** | **FERC Description** | **Balance 3/1/28** | **Balance 4/1/28** | **Balance 5/1/28** | **Balance 6/1/28** |
| 359 | **Total Gross Energy Storage Plant** | | | | | | | | |
| 386 | **All - Energy Storage** | | 387.01 | 387.01 | Land & Land Rights | - | - | - | - |
| 387 | | | 387.02 | 387.02 | Structures & Improvements | 23,176,806 | 23,176,806 | 23,176,806 | 23,176,806 |
| 388 | | | 387.03 | 387.03 | Energy Storage Equipment | 210,447,129 | 210,447,129 | 210,447,129 | 210,447,129 |
| 389 | | | 387.05 | 387.05 | Collector System | 25,624,069 | 25,624,069 | 25,624,069 | 25,624,069 |
| 390 | | | 387.06 | 387.06 | Generator Step-Up Transformers (GSU) | 59,151,201 | 59,151,201 | 59,151,201 | 59,151,201 |
| 391 | | | 387.07 | 387.07 | Inverters | - | - | - | - |
| 392 | | | 387.08 | 387.08 | Computer Hardware | 5,348,140 | 5,348,140 | 5,348,140 | 5,348,140 |
| 393 | | | 387.09 | 387.09 | Computer Software | 965,150 | 965,150 | 965,150 | 965,150 |
| 394 | | | 387.10 | 387.10 | Communication Equipment | 1,233,478 | 1,233,478 | 1,233,478 | 1,233,478 |
| 395 | | | 387.11 | 387.11 | Misc. Energy Storage Equipment | 7,837,251 | 7,837,251 | 7,837,251 | 7,837,251 |
| 396 | | | 387.12 | 387.12 | Asset Retirement Costs for Energy Storage | - | - | - | - |
| 397 | **Total Gross Energy Storage Plant** | | | | | 333,783,222 | 333,783,222 | 333,783,222 | 333,783,222 |
| 398 | | | | | | | | | |
| 399 | | | | | | | | | |
| 400 | **Gross Plant Transmission Plant** | | | | | | | | |
| 401 | | | | | | | | | |
| 402 | | | | | | | | | |
| 453 | **All - Transmission** | | | | | | | | |
| 454 | | 650 | 350 | 650350 | Land and Land Rights | 84,621,199 | 84,621,199 | 84,621,199 | 84,621,199 |
| 455 | | 650 | 350.1 | 650350.1 | Land - Right of Way | 54,011,193 | 54,011,193 | 54,011,193 | 54,011,193 |
| 456 | | 650 | 351.01 | 650350.01 | Computer Hardware | 18,974,110 | 19,019,993 | 19,043,508 | 19,309,190 |
| 457 | | 650 | 351.02 | 650350.02 | Computer Software | 10,027,103 | 10,027,103 | 10,027,103 | 10,027,103 |
| 458 | | 650 | 351.03 | 650350.03 | Communication Equipment | 55,067,463 | 55,164,468 | 55,211,498 | 55,742,862 |
| 459 | | 650 | 352 | 650352 | Structures and Improvements | 279,792,142 | 280,153,776 | 280,330,869 | 282,505,845 |
| 460 | | 650 | 353 | 650353 | Station Equipment | 1,096,879,604 | 1,097,297,723 | 1,105,530,710 | 1,108,485,118 |
| 461 | | 650 | 353.1 | 650353.1 | Station Equipment - Step-up Xfmr and Aux | 12,217,952 | 12,303,727 | 12,372,457 | 12,368,597 |
| 462 | | 650 | 354 | 650354 | Towers and Fixtures | 64,450,663 | 64,425,868 | 64,401,073 | 64,376,278 |
| 463 | | 650 | 355 | 650355 | Poles and Fixtures | 574,012,363 | 574,013,754 | 573,944,217 | 574,359,014 |
| 464 | | 650 | 356 | 650356 | Overhead Conductors and Devices | 242,754,027 | 242,804,134 | 242,894,951 | 243,143,904 |
| 465 | | 650 | 357 | 650357 | Underground Conduit | 733,196 | 733,196 | 901,258 | 901,258 |
| 466 | | 650 | 359 | 650359 | Roads and Trails | 9,798,670 | 9,798,574 | 9,798,478 | 9,798,382 |
| 467 | **Total Gross Plant Transmission Plant** | | | | | 2,503,339,683 | 2,504,374,708 | 2,513,088,511 | 2,519,649,943 |
| 468 | | | | | | | | | |

| | A | B | C | D | E | AW | AX | AY | AZ |
|---|---|---|---|---|---|---|---|---|---|
| 1 | **Public Service Company of New Mexico** | | | | | | | | |
| 2 | **Schedule B-3** | | | | | | | | |
| 3 | **Original Cost of Plant In Service by Monthly Balances** | | | | | | | | |
| 4 | **Base Period Ending 6/30/2026** | | | | | | | | |
| 5 | **Test Period Ending 9/30/2028** | | | | | | | | |
| 6 | Link to WP Plant Lead Sheet | | | | | | | | |
| 7 | | | | | | | | | |
| 8 | **Base Period data is historical Information from the Company's Books and Records.** | | | | | | | | |
| 9 | This schedule is sponsored by PNM Witness Gutierrez | | | | | | | | |
| 10 | **Location** | **Location Number Note 6** | **FERC** | **Loc/ FERC** | **FERC Description** | **Balance 3/1/28** | **Balance 4/1/28** | **Balance 5/1/28** | **Balance 6/1/28** |
| 469 | | | | | | | | | |
| 470 | | | | | | | | | |
| 471 | **Gross Plant Distribution Plant** | | | | | | | | |
| 665 | **All - Distribution** | | | | | | | | |
| 666 | | | 360 | | Land and Land Rights | 10,718,584 | 10,841,009 | 10,869,390 | 10,869,390 |
| 667 | | | 360.1 | | Land - Right of Way | 4,685,187 | 4,685,187 | 4,685,187 | 4,685,187 |
| 668 | | | 361 | | Structures and Improvements | 79,625,512 | 80,626,631 | 80,668,851 | 80,734,661 |
| 669 | | | 362 | | Station Equipment | 410,920,641 | 416,251,217 | 416,543,913 | 416,846,963 |
| 670 | | | 363.01 | | Computer Hardware | 25,520,603 | 25,939,926 | 26,366,564 | 26,793,190 |
| 671 | | | 363.02 | | Computer Software | 109,409,210 | 110,667,179 | 111,947,092 | 113,226,971 |
| 672 | | | 363.03 | | Communication Equipment | 45,842,557 | 46,033,144 | 50,337,343 | 51,000,498 |
| 673 | | | 364 | | Poles, Towers and Fixtures | 539,436,521 | 542,211,107 | 547,248,522 | 551,163,179 |
| 674 | | | 365 | | Overhead Conductors and Devices | 363,105,320 | 366,442,423 | 371,665,736 | 374,740,564 |
| 675 | | | 366 | | Underground Conduit | 226,703,964 | 227,641,566 | 229,993,859 | 231,280,823 |
| 676 | | | 367 | | Underground Conductors and Devices | 527,487,452 | 528,860,731 | 533,343,396 | 535,164,403 |
| 677 | | | 368 | | Line Transformers | 310,186,446 | 310,997,551 | 311,970,363 | 312,970,566 |
| 678 | | | 369 | | Services | 111,410,860 | 111,379,710 | 113,136,132 | 113,104,982 |
| 679 | | | 369.1 | | Services - Underground | 207,086,820 | 207,070,301 | 212,714,428 | 212,697,909 |
| 680 | | | 370 | | Meters Net Plant - PNM | 47,509,430 | 45,203,245 | 43,212,863 | 40,972,590 |
| 681 | | | 370.4 | | Meters Net Plant - Grid Mod | 74,415,905 | 76,931,844 | 79,491,670 | 82,051,427 |
| 682 | | | 371 | | Installations on Customers' Premises | 9,151,530 | 9,151,530 | 9,151,530 | 9,151,530 |
| 683 | | | 371.1 | | Leased Flood Lighting | 307,353 | 307,353 | 307,353 | 307,353 |
| 684 | | | 373 | | Street Lighting and Signal Systems | 39,718,290 | 40,030,113 | 40,447,159 | 40,963,432 |
| 685 | | | 374 | | Asset Retirement Costs - Distribution | - | - | - | - |
| 686 | **Total Gross Plant Distribution Plant** | | | | | 3,143,242,184 | 3,161,271,768 | 3,194,101,350 | 3,208,725,618 |
| 687 | | | | | | | | | |

| | A | B | C | D | E | AW | AX | AY | AZ |
|---|---|---|---|---|---|---|---|---|---|
| 1 | **Public Service Company of New Mexico** | | | | | | | | |
| 2 | **Schedule B-3** | | | | | | | | |
| 3 | **Original Cost of Plant In Service by Monthly Balances** | | | | | | | | |
| 4 | **Base Period Ending 6/30/2026** | | | | | | | | |
| 5 | **Test Period Ending 9/30/2028** | | | | | | | | |
| 6 | Link to WP Plant Lead Sheet | | | | | | | | |
| 7 | | | | | | | | | |
| 8 | **Base Period data is historical Information from the Company's Books and Records.** | | | | | | | | |
| 9 | This schedule is sponsored by PNM Witness Gutierrez | | | | | | | | |
| 10 | **Location** | **Location Number Note 6** | **FERC** | **Loc/ FERC** | **FERC Description** | **Balance 3/1/28** | **Balance 4/1/28** | **Balance 5/1/28** | **Balance 6/1/28** |
| 688 | | | | | | | | | |
| 689 | **Gross Plant G&I Plant (303,389-399)** | | | | | | | | |
| 719 | **Total General & Intangible Plant** | | | | | | | | |
| 720 | | | 303 | 303 | Miscellaneous Intangible Plant | - | - | - | - |
| 721 | | | 389 | 389 | Land and Land Rights | 1,937,568 | 1,937,568 | 1,937,568 | 1,937,568 |
| 722 | | | 390 | 390 | Structures and Improvements | 82,378,424 | 82,506,684 | 82,619,553 | 82,587,470 |
| 723 | | | 390.1 | 390.1 | Bulk Power Office Building Remodeling | 5,864,632 | 5,866,115 | 5,863,954 | 5,861,793 |
| 724 | | | 390.2 | 390.2 | Bulk Power Office Building | 5,945,142 | 5,945,142 | 5,945,142 | 5,945,142 |
| 725 | | | 391 | 391 | Office Furniture and Equipment | 5,064,178 | 5,071,453 | 5,074,880 | 5,074,880 |
| 726 | | | 391.1 | 391.1 | Office Furniture and Equipment - PC System | - | - | - | - |
| 727 | | | 391.2 | 391.2 | Office Furniture and Equipment - PC's | - | - | - | - |
| 728 | | | 391.3 | 391.3 | Computer Hardware | - | - | - | - |
| 729 | | | 391.5 | 391.5 | Computer Hardware - Solar | - | - | - | - |
| 730 | | | 391.7 | 391.7 | Computer Hardware | - | - | - | - |
| 731 | | | 392 | 392 | Transportation Equipment - Light | 5,272,893 | 5,270,074 | 5,268,486 | 5,278,310 |
| 732 | | | 392.1 | 392.1 | Transportation Equipment - Heavy | 4,878,791 | 4,857,208 | 4,835,625 | 4,814,042 |
| 733 | | | 392.2 | 392.2 | Transportation Equipment - Trailers | 8,667,393 | 8,667,119 | 8,666,845 | 8,666,571 |
| 734 | | | 392.4 | 392.4 | Transportation Equipment - Leaseback | - | - | - | - |
| 735 | | | 393 | 393 | Stores Equipment | 97,939 | 97,939 | 97,939 | 97,939 |
| 736 | | | 394 | 394 | Tools, Shop & Garage Equipment | 20,966,739 | 21,089,320 | 21,138,641 | 21,138,641 |
| 737 | | | 395 | 395 | Laboratory Equipment | 206,265 | 206,265 | 206,265 | 206,265 |
| 738 | | | 396 | 396 | Power Operated Equipment | 7,553,213 | 7,559,297 | 7,561,931 | 7,561,661 |
| 739 | | | 397.01 | 397.01 | Computer Hardware | 860,931 | 862,753 | 862,753 | 862,753 |
| 740 | | | 397.02 | 397.02 | Computer Software | 51,358,469 | 51,358,469 | 51,358,469 | 51,358,469 |
| 741 | | | 397.03 | 397.03 | Communication Equipment | - | - | - | - |
| 742 | | | 398 | 398 | Miscellaneous Equipment | 1,815,316 | 1,815,316 | 1,815,316 | 1,815,316 |
| 743 | | | 399.1 | 399.1 | ARO General Plant-1 | 19,473 | 19,473 | 19,473 | 19,473 |
| 744 | **Total Gross Plant G&I Plant - PNM** | | | | | 202,887,366 | 203,130,194 | 203,272,839 | 203,226,293 |
| 745 | | | | | | | | | |
| 746 | **Total Electric Plant In Service** | | 101/106 | | | 8,534,270,192 | 8,557,720,929 | 8,610,871,578 | 8,636,448,226 |
| 747 | | | | | | | | | |
| 748 | **Electric Plant Purchased** | | 102 | | | | | | |
| 749 | | | | | | | | | |
| 750 | **Electric Plant Acquisition Adjustment** | | | | Acq. Adj. - Palo Verde Unit 1&2 (Drexel) | - | - | - | - |
| 751 | | | | | Acq. Adj. - Palo Verde Unit 2 (First Chicago) | 14,976,966 | 14,907,628 | 14,838,290 | 14,768,952 |
| 752 | | | | | Acq. Adj. - (EIP) | - | - | - | - |
| 753 | **Electric Plant Acquisition Adjustment** | | 114 | | | 14,976,966 | 14,907,628 | 14,838,290 | 14,768,952 |
| 754 | | | | | | | | | |
| 755 | **Total Electric Plant** | | | | | 8,549,247,157 | 8,572,628,557 | 8,625,709,868 | 8,651,217,178 |
| 756 | | | | | | | | | |
| 757 | | | | | | | | | |

| | A | B | C | D | E | AW | AX | AY | AZ |
|---|---|---|---|---|---|---|---|---|---|
| 1 | **Public Service Company of New Mexico** | | | | | | | | |
| 2 | **Schedule B-3** | | | | | | | | |
| 3 | **Original Cost of Plant In Service by Monthly Balances** | | | | | | | | |
| 4 | **Base Period Ending 6/30/2026** | | | | | | | | |
| 5 | **Test Period Ending 9/30/2028** | | | | | | | | |
| 6 | Link to WP Plant Lead Sheet | | | | | | | | |
| 7 | | | | | | | | | |
| 8 | **Base Period data is historical Information from the Company's Books and Records.** | | | | | | | | |
| 9 | This schedule is sponsored by PNM Witness Gutierrez | | | | | | | | |
| 10 | **Location** | **Location Number Note 6** | **FERC** | **Loc/ FERC** | **FERC Description** | **Balance 3/1/28** | **Balance 4/1/28** | **Balance 5/1/28** | **Balance 6/1/28** |
| 758 | **Corporate Unallocated** | 900 | 303 | 900303 | Miscellaneous Intangible Plant | - | - | - | - |
| 759 | | 900 | 389 | 900389 | Land and Land Rights | 5,133,327 | 5,133,327 | 5,133,327 | 5,133,327 |
| 760 | | 900 | 390 | 900390 | Structures and Improvements | 84,886,223 | 84,961,207 | 86,504,059 | 86,458,723 |
| 761 | | 900 | 390.1 | 900390.1 | Bulk Power Office Building Remodeling | - | - | - | - |
| 762 | | 900 | 390.2 | 900390.2 | Bulk Power Office Building | - | - | - | - |
| 763 | | 900 | 391 | 900391 | Office Furniture and Equipment | 2,161,765 | 2,172,197 | 2,205,284 | 2,226,057 |
| 764 | | 900 | 391.1 | 900391.1 | Office Furniture and Equipment - PC System | - | - | - | - |
| 765 | | 900 | 391.2 | 900391.2 | Office Furniture and Equipment - PC's | - | - | - | - |
| 766 | | 900 | 391.3 | 900391.3 | Computer Hardware | - | - | - | - |
| 767 | | 900 | 391.5 | 900391.5 | Computer Hardware - Solar | - | - | - | - |
| 768 | | 900 | 391.7 | 900391.7 | Computer Hardware | - | - | - | - |
| 769 | | 900 | 392 | 900392 | Transportation Equipment - Light | 350,330 | 350,330 | 350,330 | 350,330 |
| 770 | | 900 | 392.1 | 900392.1 | Transportation Equipment - Heavy | 52,320 | 52,320 | 52,320 | 52,320 |
| 771 | | 900 | 392.2 | 900392.2 | Transportation Equipment - Trailers | 10,272 | 10,272 | 10,272 | 10,272 |
| 772 | | 900 | 392.4 | 900392.4 | Transportation Equipment - Leaseback | (240) | (252) | (264) | (276) |
| 773 | | 900 | 393 | 900393 | Stores Equipment | - | - | - | - |
| 774 | | 900 | 394 | 900394 | Tools, Shop & Garage Equipment | 436,729 | 436,729 | 436,729 | 436,729 |
| 775 | | 900 | 395 | 900395 | Laboratory Equipment | - | - | - | - |
| 776 | | 900 | 396 | 900396 | Power Operated Equipment | 26,134 | 26,134 | 26,134 | 26,134 |
| 777 | | 900 | 397 | 900397 | Communication Equipment | - | - | - | - |
| 778 | | 900 | 397.01 | 900397.01 | Computer Hardware | 31,057,381 | 31,210,461 | 31,210,461 | 31,605,144 |
| 779 | | 900 | 397.02 | 900397.02 | Computer Software | 298,127,981 | 298,761,972 | 298,761,972 | 300,423,795 |
| 780 | | 900 | 397.03 | 900397.03 | Communication Equipment | 3,768,504 | 3,768,504 | 3,768,504 | 3,768,504 |
| 781 | | 900 | 397.2 | 900397.2 | Communication Equipment | - | - | - | - |
| 782 | | 900 | 397.3 | 900397.3 | Communication Equipment | - | - | - | - |
| 783 | | 900 | 398 | 900398 | Miscellaneous Equipment | - | - | - | - |
| 784 | | 900 | 399.1 | 900399.1 | ARO General Plant-1 | - | - | - | - |
| 785 | | | | | | | | | |
| 786 | **Total Corporate Unallocated** | | | | | 426,010,728 | 426,883,203 | 428,459,129 | 430,491,059 |
| 787 | | | | | | | | | |
| 788 | **al Electric Plant In Service - with Corporate** | | 101/106 | | | 8,960,280,920 | 8,984,604,132 | 9,039,330,707 | 9,066,939,285 |
| 790 | **Electric Plant Purchased - with Corporate** | | 102 | | | | | | |
| 792 | **Electric Plant Acq. Adj. - with Corporate** | | 114 | | | 14,976,966 | 14,907,628 | 14,838,290 | 14,768,952 |
| 793 | | | | | | | | | |
| 794 | **Total Electric Plant - with Corporate** | | | | | 8,975,257,886 | 8,999,511,759 | 9,054,168,997 | 9,081,708,237 |

| | A | B | C | D | E | BA | BB | BC | BD |
|---|---|---|---|---|---|---|---|---|---|
| 1 | **Public Service Company of New Mexico** | | | | | | | | |
| 2 | **Schedule B-3** | | | | | | | | |
| 3 | **Original Cost of Plant In Service by Monthly Balances** | | | | | | | | |
| 4 | **Base Period Ending 6/30/2026** | | | | | | | | |
| 5 | **Test Period Ending 9/30/2028** | | | | | | | | |
| 6 | Link to WP Plant Lead Sheet | | | | | | | | |
| 7 | | | | | | | | | |
| 8 | **Base Period data is historical Information from the Company's Books and Records.** | | | | | | | | |
| 9 | This schedule is sponsored by PNM Witness Gutierrez | | | | | | | | |
| 10 | **Location** | **Location Number Note 6** | **FERC** | **Loc/ FERC** | **FERC Description** | **Balance 7/1/28** | **Balance 8/1/28** | **Balance 9/1/28** | **Test Period Ending Balance 9/30/28** |
| 11 | | | | | | | | | |
| 12 | **Production Plant** | | | | | | | | |
| 13 | **Steam Production** | | | | | | | | |
| 56 | **All - Steam** | | | | | | | | |
| 57 | | | 310 | | Land and Land Rights | 618,487 | 618,487 | 618,487 | 618,487 |
| 58 | | | 310.1 | | Land Right of Way | 22,368 | 22,368 | 22,368 | 22,368 |
| 59 | | | 311 | | Structures & Improvements | 38,291,178 | 38,430,651 | 38,570,254 | 38,710,001 |
| 60 | | | 312 | | Boiler Plant Equipment | 263,432,039 | 263,163,897 | 262,895,795 | 262,627,738 |
| 61 | | | 314 | | Turbogenerator Units | 71,671,993 | 71,674,466 | 71,676,966 | 71,679,497 |
| 62 | | | 315 | | Accessory Electric Equipment | 20,467,308 | 20,453,238 | 20,439,168 | 20,425,098 |
| 63 | | | 315.01 | | Computer Hardware | - | - | - | - |
| 64 | | | 315.02 | | Computer Software | 1,362,246 | 1,362,246 | 1,362,246 | 1,362,246 |
| 65 | | | 315.03 | | Communication Equipment | 334,053 | 334,053 | 334,053 | 334,053 |
| 66 | | | 316 | | Misc Power Plant Equipment | 28,697,798 | 28,655,066 | 28,612,334 | 28,569,602 |
| 67 | | | 317 | | Asset Retirement Costs - Steam | 10,249,476 | 10,249,476 | 10,249,476 | 10,249,476 |
| 68 | **Total Steam Production Gross Plant** | | | | | 435,146,947 | 434,963,948 | 434,781,147 | 434,598,566 |
| 69 | | | | | | | | | |
| 70 | | | | | | | | | |
| 71 | **Nuclear Production** | | | | | | | | |
| 129 | **All - Nuclear** | | | | | | | | |
| 130 | | | 320 | | Land and Land Rights | 439,822 | 439,822 | 439,822 | 439,822 |
| 131 | | | 320.1 | | Land - Right of Way | 44,622 | 44,622 | 44,622 | 44,622 |
| 132 | | | 321 | | Structures and Improvements | 211,641,814 | 211,816,036 | 212,092,821 | 212,085,752 |
| 133 | | | 322 | | Reactor Plant Equipment | 360,712,374 | 361,504,526 | 362,758,212 | 362,734,555 |
| 134 | | | 323 | | Turbogenerator Units | 113,980,100 | 113,938,447 | 113,896,794 | 113,855,141 |
| 135 | | | 324 | | Accessory Electric Equipment | 60,688,165 | 60,678,449 | 60,668,733 | 60,659,017 |
| 136 | | | 324.01 | | Computer Hardware | - | - | - | - |
| 137 | | | 324.02 | | Computer Software | 15,607,778 | 15,689,843 | 15,815,865 | 15,820,234 |
| 138 | | | 324.03 | | Communication Equipment | 827,032 | 840,710 | 861,714 | 862,442 |
| 139 | | | 325 | | Misc Power Plant Equipment | 77,751,368 | 77,968,599 | 78,303,045 | 78,313,087 |
| 140 | | | 326 | | Asset Retirement Costs Nuclear Prod Plant | - | - | - | - |
| 141 | **Total Nuclear Production Gross Plant** | | | | | 841,693,076 | 842,921,055 | 844,881,628 | 844,814,673 |

| | A | B | C | D | E | BA | BB | BC | BD |
|---|---|---|---|---|---|---|---|---|---|
| 1 | **Public Service Company of New Mexico** | | | | | | | | |
| 2 | **Schedule B-3** | | | | | | | | |
| 3 | **Original Cost of Plant In Service by Monthly Balances** | | | | | | | | |
| 4 | **Base Period Ending 6/30/2026** | | | | | | | | |
| 5 | **Test Period Ending 9/30/2028** | | | | | | | | |
| 6 | Link to WP Plant Lead Sheet | | | | | | | | |
| 7 | | | | | | | | | |
| 8 | **Base Period data is historical Information from the Company's Books and Records.** | | | | | | | | |
| 9 | This schedule is sponsored by PNM Witness Gutierrez | | | | | | | | |
| 10 | **Location** | **Location Number Note 6** | **FERC** | **Loc/ FERC** | **FERC Description** | **Balance 7/1/28** | **Balance 8/1/28** | **Balance 9/1/28** | **Test Period Ending Balance 9/30/28** |
| 142 | | | | | | | | | |
| 143 | | | | | | | | | |
| 144 | **Solar Production** | | | | | | | | |
| 237 | **All - Solar** | | | | | | | | |
| 238 | | | 338.01 | | Land & Land Rights | 11,040,948 | 11,040,948 | 11,040,948 | 11,040,948 |
| 239 | | | 338.02 | | Structures and Improvements | 268,299 | 268,299 | 268,299 | 268,299 |
| 240 | | | 338.04 | | Solar Panels | 440,961,518 | 440,961,518 | 440,961,518 | 440,961,518 |
| 241 | | | 338.05 | | Collector System | 8,264,812 | 8,264,812 | 8,264,812 | 8,264,812 |
| 242 | | | 338.07 | | Solar Inverters | 10,127,593 | 10,127,593 | 10,127,593 | 10,127,593 |
| 243 | | | 338.08 | | Other Accessory Electrical Equipment | 23,775,507 | 23,775,507 | 23,775,507 | 23,775,507 |
| 244 | | | 338.09 | | Computer Hardware | 51,760 | 51,760 | 51,760 | 51,760 |
| 245 | | | 338.10 | | Computer Software | - | - | - | - |
| 246 | | | 338.11 | | Communication Equipment | 637,577 | 637,577 | 637,577 | 637,577 |
| 247 | | | 338.12 | | Misc. Power Plant Equipment | 5,228,178 | 5,228,178 | 5,228,178 | 5,228,178 |
| 248 | **Total Solar Production Gross Plant** | | | | | 500,356,192 | 500,356,192 | 500,356,192 | 500,356,192 |
| 249 | | | | | | | | | |
| 250 | **Other Production** | | | | | | | | |
| 251 | | | | | | | | | |
| 252 | **Other Production - Gas:** | | | | | | | | |
| 339 | **All - Gas** | | 340 | | Land and Land Rights | 7,079,884 | 7,079,884 | 7,079,884 | 7,079,884 |
| 340 | | | 340.1 | | Land - Right of Way | 1,959,313 | 1,959,313 | 1,959,313 | 1,959,313 |
| 341 | | | 341 | | Structures and Improvements | 95,383,520 | 95,345,691 | 95,307,862 | 95,270,033 |
| 342 | | | 342 | | Fuel Holders, Producers, Accessories | 130,849,086 | 130,841,169 | 130,833,252 | 130,825,335 |
| 343 | | | 343 | | Prime Movers | - | - | - | - |
| 344 | | | 344 | | Generators | 272,734,374 | 272,657,419 | 272,580,464 | 272,503,509 |
| 345 | | | 345 | | Accessory Electric Equipment | 28,035,483 | 28,001,562 | 27,967,641 | 27,933,720 |
| 346 | | | 345.01 | | Computer Hardware | - | - | - | - |
| 347 | | | 345.02 | | Computer Software | 60,931 | 60,931 | 60,931 | 60,931 |
| 348 | | | 345.03 | | Communication Equipment | 38,862 | 38,862 | 38,862 | 38,862 |
| 349 | | | 346 | | Misc Power Plant Equipment | 51,031,525 | 51,014,233 | 51,015,063 | 51,085,179 |
| 350 | | | 347 | | Asset Retirement Costs - Other Production | 7,008,573 | 7,008,573 | 7,008,573 | 7,008,573 |
| 351 | **Total Other Production Plant - Gas** | | | | | 594,181,551 | 594,007,637 | 593,851,845 | 593,765,340 |
| 352 | | | | | | | | | |
| 353 | | | | | | | | | |
| 354 | **Total Other Production Gross Plant** | | | | | 594,181,551 | 594,007,637 | 593,851,845 | 593,765,340 |
| 355 | | | | | | | | | |
| 356 | **Total Gross Plant Production** | | | | | 2,371,377,766 | 2,372,248,832 | 2,373,870,812 | 2,373,534,770 |
| 357 | | | | | | | | | |
| 358 | | | | | | | | | |

| | A | B | C | D | E | BA | BB | BC | BD |
|---|---|---|---|---|---|---|---|---|---|
| 1 | **Public Service Company of New Mexico** | | | | | | | | |
| 2 | **Schedule B-3** | | | | | | | | |
| 3 | **Original Cost of Plant In Service by Monthly Balances** | | | | | | | | |
| 4 | **Base Period Ending 6/30/2026** | | | | | | | | |
| 5 | **Test Period Ending 9/30/2028** | | | | | | | | |
| 6 | Link to WP Plant Lead Sheet | | | | | | | | |
| 7 | | | | | | | | | |
| 8 | **Base Period data is historical Information from the Company's Books and Records.** | | | | | | | | |
| 9 | This schedule is sponsored by PNM Witness Gutierrez | | | | | | | | |
| 10 | **Location** | **Location Number Note 6** | **FERC** | **Loc/ FERC** | **FERC Description** | **Balance 7/1/28** | **Balance 8/1/28** | **Balance 9/1/28** | **Test Period Ending Balance 9/30/28** |
| 359 | **Total Gross Energy Storage Plant** | | | | | | | | |
| 386 | **All - Energy Storage** | | 387.01 | 387.01 | Land & Land Rights | - | - | - | - |
| 387 | | | 387.02 | 387.02 | Structures & Improvements | 23,176,806 | 23,176,806 | 23,176,806 | 23,176,806 |
| 388 | | | 387.03 | 387.03 | Energy Storage Equipment | 210,447,129 | 210,447,129 | 210,447,129 | 210,447,129 |
| 389 | | | 387.05 | 387.05 | Collector System | 25,624,069 | 25,624,069 | 25,624,069 | 25,624,069 |
| 390 | | | 387.06 | 387.06 | Generator Step-Up Transformers (GSU) | 59,151,201 | 59,151,201 | 59,151,201 | 59,151,201 |
| 391 | | | 387.07 | 387.07 | Inverters | - | - | - | - |
| 392 | | | 387.08 | 387.08 | Computer Hardware | 5,348,140 | 5,348,140 | 5,348,140 | 5,348,140 |
| 393 | | | 387.09 | 387.09 | Computer Software | 965,150 | 965,150 | 965,150 | 965,150 |
| 394 | | | 387.10 | 387.10 | Communication Equipment | 1,233,478 | 1,233,478 | 1,233,478 | 1,233,478 |
| 395 | | | 387.11 | 387.11 | Misc. Energy Storage Equipment | 7,837,251 | 7,837,251 | 7,837,251 | 7,837,251 |
| 396 | | | 387.12 | 387.12 | Asset Retirement Costs for Energy Storage | - | - | - | - |
| 397 | **Total Gross Energy Storage Plant** | | | | | 333,783,222 | 333,783,222 | 333,783,222 | 333,783,222 |
| 398 | | | | | | | | | |
| 399 | | | | | | | | | |
| 400 | **Gross Plant Transmission Plant** | | | | | | | | |
| 401 | | | | | | | | | |
| 402 | | | | | | | | | |
| 453 | **All - Transmission** | | | | | | | | |
| 454 | | 650 | 350 | 650350 | Land and Land Rights | 84,621,199 | 84,621,199 | 84,989,553 | 85,731,563 |
| 455 | | 650 | 350.1 | 650350.1 | Land - Right of Way | 54,011,193 | 54,011,193 | 54,011,193 | 54,011,193 |
| 456 | | 650 | 351.01 | 650350.01 | Computer Hardware | 19,407,673 | 19,432,157 | 19,770,098 | 21,053,807 |
| 457 | | 650 | 351.02 | 650350.02 | Computer Software | 12,130,240 | 12,148,885 | 12,148,885 | 12,148,885 |
| 458 | | 650 | 351.03 | 650350.03 | Communication Equipment | 54,437,931 | 54,485,346 | 55,161,227 | 57,736,959 |
| 459 | | 650 | 352 | 650352 | Structures and Improvements | 282,738,139 | 282,916,823 | 285,687,928 | 296,261,623 |
| 460 | | 650 | 353 | 650353 | Station Equipment | 1,196,658,687 | 1,196,686,760 | 1,200,369,116 | 1,214,692,739 |
| 461 | | 650 | 353.1 | 650353.1 | Station Equipment - Step-up Xfmr and Aux | 12,364,737 | 12,360,877 | 12,357,017 | 12,353,157 |
| 462 | | 650 | 354 | 650354 | Towers and Fixtures | 72,625,620 | 72,600,825 | 72,576,030 | 72,551,235 |
| 463 | | 650 | 355 | 650355 | Poles and Fixtures | 581,577,646 | 581,508,494 | 582,067,808 | 584,560,230 |
| 464 | | 650 | 356 | 650356 | Overhead Conductors and Devices | 243,185,314 | 243,192,292 | 243,513,504 | 244,813,740 |
| 465 | | 650 | 357 | 650357 | Underground Conduit | 901,258 | 901,258 | 901,258 | 901,258 |
| 466 | | 650 | 359 | 650359 | Roads and Trails | 9,798,286 | 9,798,190 | 9,798,094 | 9,797,998 |
| 467 | **Total Gross Plant Transmission Plant** | | | | | 2,624,457,922 | 2,624,664,298 | 2,633,351,710 | 2,666,614,387 |
| 468 | | | | | | | | | |

| | A | B | C | D | E | BA | BB | BC | BD |
|---|---|---|---|---|---|---|---|---|---|
| 1 | **Public Service Company of New Mexico** | | | | | | | | |
| 2 | **Schedule B-3** | | | | | | | | |
| 3 | **Original Cost of Plant In Service by Monthly Balances** | | | | | | | | |
| 4 | **Base Period Ending 6/30/2026** | | | | | | | | |
| 5 | **Test Period Ending 9/30/2028** | | | | | | | | |
| 6 | Link to WP Plant Lead Sheet | | | | | | | | |
| 7 | | | | | | | | | |
| 8 | **Base Period data is historical Information from the Company's Books and Records.** | | | | | | | | |
| 9 | This schedule is sponsored by PNM Witness Gutierrez | | | | | | | | |
| 10 | **Location** | **Location Number Note 6** | **FERC** | **Loc/ FERC** | **FERC Description** | **Balance 7/1/28** | **Balance 8/1/28** | **Balance 9/1/28** | **Test Period Ending Balance 9/30/28** |
| 469 | | | | | | | | | |
| 470 | | | | | | | | | |
| 471 | **Gross Plant Distribution Plant** | | | | | | | | |
| 665 | **All - Distribution** | | | | | | | | |
| 666 | | | 360 | | Land and Land Rights | 10,869,390 | 10,890,675 | 10,890,675 | 14,068,010 |
| 667 | | | 360.1 | | Land - Right of Way | 4,685,187 | 4,685,187 | 4,685,187 | 5,320,654 |
| 668 | | | 361 | | Structures and Improvements | 80,804,822 | 80,954,182 | 81,078,873 | 84,429,182 |
| 669 | | | 362 | | Station Equipment | 417,509,494 | 418,328,443 | 430,675,854 | 440,126,016 |
| 670 | | | 363.01 | | Computer Hardware | 27,083,246 | 27,502,854 | 27,875,949 | 28,249,051 |
| 671 | | | 363.02 | | Computer Software | 114,367,287 | 115,626,111 | 116,745,396 | 117,864,702 |
| 672 | | | 363.03 | | Communication Equipment | 52,183,134 | 53,362,419 | 56,391,477 | 57,838,523 |
| 673 | | | 364 | | Poles, Towers and Fixtures | 555,057,908 | 559,764,758 | 564,829,589 | 571,225,444 |
| 674 | | | 365 | | Overhead Conductors and Devices | 377,846,691 | 380,301,883 | 382,187,761 | 387,390,203 |
| 675 | | | 366 | | Underground Conduit | 232,645,612 | 234,015,233 | 235,371,702 | 238,655,735 |
| 676 | | | 367 | | Underground Conductors and Devices | 537,095,948 | 539,165,157 | 541,942,379 | 553,572,671 |
| 677 | | | 368 | | Line Transformers | 313,985,199 | 315,101,264 | 316,277,714 | 317,485,033 |
| 678 | | | 369 | | Services | 113,073,832 | 114,415,499 | 114,384,349 | 114,353,199 |
| 679 | | | 369.1 | | Services - Underground | 212,681,390 | 217,012,123 | 216,995,604 | 216,979,085 |
| 680 | | | 370 | | Meters Net Plant - PNM | 38,707,407 | 36,804,671 | 34,419,287 | 32,562,719 |
| 681 | | | 370.4 | | Meters Net Plant - Grid Mod | 84,332,059 | 86,849,708 | 89,088,278 | 91,326,890 |
| 682 | | | 371 | | Installations on Customers' Premises | 9,151,530 | 9,151,530 | 9,151,530 | 9,151,530 |
| 683 | | | 371.1 | | Leased Flood Lighting | 307,353 | 307,353 | 307,353 | 307,353 |
| 684 | | | 373 | | Street Lighting and Signal Systems | 41,445,553 | 41,933,040 | 42,347,821 | 42,795,036 |
| 685 | | | 374 | | Asset Retirement Costs - Distribution | - | - | - | - |
| 686 | **Total Gross Plant Distribution Plant** | | | | | 3,223,833,040 | 3,246,172,088 | 3,275,646,779 | 3,323,701,034 |
| 687 | | | | | | | | | |

| | A | B | C | D | E | BA | BB | BC | BD |
|---|---|---|---|---|---|---|---|---|---|
| 1 | **Public Service Company of New Mexico** | | | | | | | | |
| 2 | **Schedule B-3** | | | | | | | | |
| 3 | **Original Cost of Plant In Service by Monthly Balances** | | | | | | | | |
| 4 | **Base Period Ending 6/30/2026** | | | | | | | | |
| 5 | **Test Period Ending 9/30/2028** | | | | | | | | |
| 6 | Link to WP Plant Lead Sheet | | | | | | | | |
| 7 | | | | | | | | | |
| 8 | **Base Period data is historical Information from the Company's Books and Records.** | | | | | | | | |
| 9 | This schedule is sponsored by PNM Witness Gutierrez | | | | | | | | |
| 10 | **Location** | **Location Number Note 6** | **FERC** | **Loc/ FERC** | **FERC Description** | **Balance 7/1/28** | **Balance 8/1/28** | **Balance 9/1/28** | **Test Period Ending Balance 9/30/28** |
| 688 | | | | | | | | | |
| 689 | **Gross Plant G&I Plant (303,389-399)** | | | | | | | | |
| 719 | **Total General & Intangible Plant** | | | | | | | | |
| 720 | | | 303 | 303 | Miscellaneous Intangible Plant | - | - | - | - |
| 721 | | | 389 | 389 | Land and Land Rights | 1,937,568 | 1,937,568 | 1,937,568 | 1,937,568 |
| 722 | | | 390 | 390 | Structures and Improvements | 82,715,730 | 82,828,598 | 83,993,666 | 86,533,461 |
| 723 | | | 390.1 | 390.1 | Bulk Power Office Building Remodeling | 5,863,276 | 5,861,115 | 5,858,954 | 5,860,437 |
| 724 | | | 390.2 | 390.2 | Bulk Power Office Building | 5,945,142 | 5,945,142 | 5,945,142 | 5,945,142 |
| 725 | | | 391 | 391 | Office Furniture and Equipment | 5,082,155 | 5,085,165 | 5,085,165 | 5,092,440 |
| 726 | | | 391.1 | 391.1 | Office Furniture and Equipment - PC System | - | - | - | - |
| 727 | | | 391.2 | 391.2 | Office Furniture and Equipment - PC's | - | - | - | - |
| 728 | | | 391.3 | 391.3 | Computer Hardware | - | - | - | - |
| 729 | | | 391.5 | 391.5 | Computer Hardware - Solar | - | - | - | - |
| 730 | | | 391.7 | 391.7 | Computer Hardware | - | - | - | - |
| 731 | | | 392 | 392 | Transportation Equipment - Light | 5,275,491 | 5,272,672 | 5,270,414 | 5,270,298 |
| 732 | | | 392.1 | 392.1 | Transportation Equipment - Heavy | 4,792,459 | 4,770,876 | 4,749,293 | 4,727,710 |
| 733 | | | 392.2 | 392.2 | Transportation Equipment - Trailers | 8,666,297 | 8,666,023 | 8,665,749 | 8,665,475 |
| 734 | | | 392.4 | 392.4 | Transportation Equipment - Leaseback | - | - | - | - |
| 735 | | | 393 | 393 | Stores Equipment | 93,808 | 93,808 | 93,808 | 93,808 |
| 736 | | | 394 | 394 | Tools, Shop & Garage Equipment | 20,770,980 | 20,809,241 | 20,809,241 | 20,931,830 |
| 737 | | | 395 | 395 | Laboratory Equipment | 206,265 | 206,265 | 206,265 | 206,265 |
| 738 | | | 396 | 396 | Power Operated Equipment | 7,567,744 | 7,569,648 | 7,569,378 | 7,575,462 |
| 739 | | | 397.01 | 397.01 | Computer Hardware | 864,575 | 864,575 | 864,575 | 866,398 |
| 740 | | | 397.02 | 397.02 | Computer Software | 51,358,469 | 51,358,469 | 51,358,469 | 51,358,469 |
| 741 | | | 397.03 | 397.03 | Communication Equipment | - | - | - | - |
| 742 | | | 398 | 398 | Miscellaneous Equipment | 1,815,316 | 1,815,316 | 2,431,480 | 2,431,480 |
| 743 | | | 399.1 | 399.1 | ARO General Plant-1 | 19,473 | 19,473 | 19,473 | 19,473 |
| 744 | **Total Gross Plant G&I Plant - PNM** | | | | | 202,974,748 | 203,103,954 | 204,858,639 | 207,515,715 |
| 745 | | | | | | | | | |
| 746 | **Total Electric Plant In Service** | | 101/106 | | | 8,756,426,698 | 8,779,972,395 | 8,821,511,163 | 8,905,149,128 |
| 747 | | | | | | | | | |
| 748 | **Electric Plant Purchased** | | 102 | | | | | | |
| 749 | | | | | | | | | |
| 750 | **Electric Plant Acquisition Adjustment** | | | | Acq. Adj. - Palo Verde Unit 1&2 (Drexel) | - | - | - | - |
| 751 | | | | | Acq. Adj. - Palo Verde Unit 2 (First Chicago) | 14,699,614 | 14,630,277 | 14,560,939 | 14,491,601 |
| 752 | | | | | Acq. Adj. - (EIP) | - | - | - | - |
| 753 | **Electric Plant Acquisition Adjustment** | | 114 | | | 14,699,614 | 14,630,277 | 14,560,939 | 14,491,601 |
| 754 | | | | | | | | | |
| 755 | **Total Electric Plant** | | | | | 8,771,126,313 | 8,794,602,671 | 8,836,072,102 | 8,919,640,729 |
| 756 | | | | | | | | | |
| 757 | | | | | | | | | |

| | A | B | C | D | E | BA | BB | BC | BD |
|---|---|---|---|---|---|---|---|---|---|
| 1 | **Public Service Company of New Mexico** | | | | | | | | |
| 2 | **Schedule B-3** | | | | | | | | |
| 3 | **Original Cost of Plant In Service by Monthly Balances** | | | | | | | | |
| 4 | **Base Period Ending 6/30/2026** | | | | | | | | |
| 5 | **Test Period Ending 9/30/2028** | | | | | | | | |
| 6 | Link to WP Plant Lead Sheet | | | | | | | | |
| 7 | | | | | | | | | |
| 8 | **Base Period data is historical Information from the Company's Books and Records.** | | | | | | | | |
| 9 | This schedule is sponsored by PNM Witness Gutierrez | | | | | | | | |
| 10 | **Location** | **Location Number Note 6** | **FERC** | **Loc/ FERC** | **FERC Description** | **Balance 7/1/28** | **Balance 8/1/28** | **Balance 9/1/28** | **Test Period Ending Balance 9/30/28** |
| 758 | **Corporate Unallocated** | 900 | 303 | 900303 | Miscellaneous Intangible Plant | - | - | - | - |
| 759 | | 900 | 389 | 900389 | Land and Land Rights | 5,133,327 | 5,133,327 | 5,133,327 | 5,133,327 |
| 760 | | 900 | 390 | 900390 | Structures and Improvements | 86,533,699 | 88,076,494 | 88,031,158 | 88,106,141 |
| 761 | | 900 | 390.1 | 900390.1 | Bulk Power Office Building Remodeling | - | - | - | - |
| 762 | | 900 | 390.2 | 900390.2 | Bulk Power Office Building | - | - | - | - |
| 763 | | 900 | 391 | 900391 | Office Furniture and Equipment | 2,278,380 | 2,311,466 | 2,410,674 | 2,420,153 |
| 764 | | 900 | 391.1 | 900391.1 | Office Furniture and Equipment - PC System | - | - | - | - |
| 765 | | 900 | 391.2 | 900391.2 | Office Furniture and Equipment - PC's | - | - | - | - |
| 766 | | 900 | 391.3 | 900391.3 | Computer Hardware | - | - | - | - |
| 767 | | 900 | 391.5 | 900391.5 | Computer Hardware - Solar | - | - | - | - |
| 768 | | 900 | 391.7 | 900391.7 | Computer Hardware | - | - | - | - |
| 769 | | 900 | 392 | 900392 | Transportation Equipment - Light | 350,330 | 350,330 | 350,330 | 350,330 |
| 770 | | 900 | 392.1 | 900392.1 | Transportation Equipment - Heavy | 52,320 | 52,320 | 52,320 | 52,320 |
| 771 | | 900 | 392.2 | 900392.2 | Transportation Equipment - Trailers | 10,272 | 10,272 | 10,272 | 10,272 |
| 772 | | 900 | 392.4 | 900392.4 | Transportation Equipment - Leaseback | (288) | (300) | (312) | (324) |
| 773 | | 900 | 393 | 900393 | Stores Equipment | - | - | - | - |
| 774 | | 900 | 394 | 900394 | Tools, Shop & Garage Equipment | 436,729 | 436,729 | 436,729 | 436,729 |
| 775 | | 900 | 395 | 900395 | Laboratory Equipment | - | - | - | - |
| 776 | | 900 | 396 | 900396 | Power Operated Equipment | 26,134 | 26,134 | 26,134 | 26,134 |
| 777 | | 900 | 397 | 900397 | Communication Equipment | - | - | - | - |
| 778 | | 900 | 397.01 | 900397.01 | Computer Hardware | 32,035,016 | 32,035,016 | 33,919,973 | 34,054,955 |
| 779 | | 900 | 397.02 | 900397.02 | Computer Software | 304,964,596 | 305,404,420 | 315,708,955 | 316,266,745 |
| 780 | | 900 | 397.03 | 900397.03 | Communication Equipment | 1,958,922 | 1,958,922 | 1,958,922 | 1,958,922 |
| 781 | | 900 | 397.2 | 900397.2 | Communication Equipment | - | - | - | - |
| 782 | | 900 | 397.3 | 900397.3 | Communication Equipment | - | - | - | - |
| 783 | | 900 | 398 | 900398 | Miscellaneous Equipment | - | - | - | - |
| 784 | | 900 | 399.1 | 900399.1 | ARO General Plant-1 | - | - | - | - |
| 785 | | | | | | | | | |
| 786 | **Total Corporate Unallocated** | | | | | 433,779,438 | 435,795,131 | 448,038,483 | 448,815,705 |
| 787 | | | | | | | | | |
| 788 | **al Electric Plant In Service - with Corporate** | | 101/106 | | | 9,190,206,136 | 9,215,767,526 | 9,269,549,646 | 9,353,964,833 |
| 790 | **Electric Plant Purchased - with Corporate** | | 102 | | | | | | |
| 792 | **Electric Plant Acq. Adj. - with Corporate** | | 114 | | | 14,699,614 | 14,630,277 | 14,560,939 | 14,491,601 |
| 793 | | | | | | | | | |
| 794 | **Total Electric Plant - with Corporate** | | | | | 9,204,905,750 | 9,230,397,802 | 9,284,110,585 | 9,368,456,434 |

| | A | B | C | D | E | BE | BF | BG |
|---|---|---|---|---|---|---|---|---|
| 1 | **Public Service Company of New Mexico** | | | | | | | |
| 2 | **Schedule B-3** | | | | | | | |
| 3 | **Original Cost of Plant In Service by Monthly Balances** | | | | | | | |
| 4 | **Base Period Ending 6/30/2026** | | | | | | | |
| 5 | **Test Period Ending 9/30/2028** | | | | | | | |
| 6 | Link to WP Plant Lead Sheet | | | | | | | |
| 7 | | | | | | | | |
| 8 | **Base Period data is historical Information from the Company's Books and Records.** | | | | | | | |
| 9 | This schedule is sponsored by PNM Witness Gutierrez | | | | | | | |
| 10 | **Location** | **Location Number Note 6** | **FERC** | **Loc/ FERC** | **FERC Description** | **Shared Service Allocation Note 4** | **Test Period 13 Month Average Adjustment** | **Total Test Period Adjustments** |
| 11 | | | | | | | | |
| 12 | **Production Plant** | | | | | | | |
| 13 | **Steam Production** | | | | | | | |
| 56 | **All - Steam** | | | | | | | |
| 57 | | | 310 | | Land and Land Rights | - | - | - |
| 58 | | | 310.1 | | Land Right of Way | - | - | - |
| 59 | | | 311 | | Structures & Improvements | - | (3,230,922) | (3,230,922) |
| 60 | | | 312 | | Boiler Plant Equipment | - | (875,289) | (875,289) |
| 61 | | | 314 | | Turbogenerator Units | - | (1,534,469) | (1,534,469) |
| 62 | | | 315 | | Accessory Electric Equipment | - | (36,315) | (36,315) |
| 63 | | | 315.01 | | Computer Hardware | - | - | - |
| 64 | | | 315.02 | | Computer Software | - | - | - |
| 65 | | | 315.03 | | Communication Equipment | - | - | - |
| 66 | | | 316 | | Misc Power Plant Equipment | - | (226,546) | (226,546) |
| 67 | | | 317 | | Asset Retirement Costs - Steam | - | - | - |
| 68 | **Total Steam Production Gross Plant** | | | | | - | (5,903,541) | (5,903,541) |
| 69 | | | | | | | | |
| 70 | | | | | | | | |
| 71 | **Nuclear Production** | | | | | | | |
| 129 | **All - Nuclear** | | | | | | | |
| 130 | | | 320 | | Land and Land Rights | - | - | - |
| 131 | | | 320.1 | | Land - Right of Way | - | - | - |
| 132 | | | 321 | | Structures and Improvements | - | (1,241,744) | (1,241,744) |
| 133 | | | 322 | | Reactor Plant Equipment | - | (5,636,769) | (5,636,769) |
| 134 | | | 323 | | Turbogenerator Units | - | 249,918 | 249,918 |
| 135 | | | 324 | | Accessory Electric Equipment | - | 58,296 | 58,296 |
| 136 | | | 324.01 | | Computer Hardware | - | - | - |
| 137 | | | 324.02 | | Computer Software | - | (576,572) | (576,572) |
| 138 | | | 324.03 | | Communication Equipment | - | (96,095) | (96,095) |
| 139 | | | 325 | | Misc Power Plant Equipment | - | (1,527,859) | (1,527,859) |
| 140 | | | 326 | | Asset Retirement Costs Nuclear Prod Plant | - | - | - |
| 141 | **Total Nuclear Production Gross Plant** | | | | | - | (8,770,825) | (8,770,825) |

| | A | B | C | D | E | BE | BF | BG |
|---|---|---|---|---|---|---|---|---|
| 1 | **Public Service Company of New Mexico** | | | | | | | |
| 2 | **Schedule B-3** | | | | | | | |
| 3 | **Original Cost of Plant In Service by Monthly Balances** | | | | | | | |
| 4 | **Base Period Ending 6/30/2026** | | | | | | | |
| 5 | **Test Period Ending 9/30/2028** | | | | | | | |
| 6 | Link to WP Plant Lead Sheet | | | | | | | |
| 7 | | | | | | | | |
| 8 | **Base Period data is historical Information from the Company's Books and Records.** | | | | | | | |
| 9 | This schedule is sponsored by PNM Witness Gutierrez | | | | | | | |
| 10 | **Location** | **Location Number Note 6** | **FERC** | **Loc/ FERC** | **FERC Description** | **Shared Service Allocation Note 4** | **Test Period 13 Month Average Adjustment** | **Total Test Period Adjustments** |
| 142 | | | | | | | | |
| 143 | | | | | | | | |
| 144 | **Solar Production** | | | | | | | |
| 237 | **All - Solar** | | | | | | | |
| 238 | | | 338.01 | | Land & Land Rights | - | - | - |
| 239 | | | 338.02 | | Structures and Improvements | - | - | - |
| 240 | | | 338.04 | | Solar Panels | - | (877,541) | (877,541) |
| 241 | | | 338.05 | | Collector System | - | - | - |
| 242 | | | 338.07 | | Solar Inverters | - | - | - |
| 243 | | | 338.08 | | Other Accessory Electrical Equipment | - | - | - |
| 244 | | | 338.09 | | Computer Hardware | - | - | - |
| 245 | | | 338.10 | | Computer Software | - | - | - |
| 246 | | | 338.11 | | Communication Equipment | - | - | - |
| 247 | | | 338.12 | | Misc. Power Plant Equipment | - | - | - |
| 248 | **Total Solar Production Gross Plant** | | | | | - | (877,541) | (877,541) |
| 249 | | | | | | | | |
| 250 | **Other Production** | | | | | | | |
| 251 | | | | | | | | |
| 252 | **Other Production - Gas:** | | | | | | | |
| 339 | **All - Gas** | | 340 | | Land and Land Rights | - | - | - |
| 340 | | | 340.1 | | Land - Right of Way | - | - | - |
| 341 | | | 341 | | Structures and Improvements | - | 23,113 | 23,113 |
| 342 | | | 342 | | Fuel Holders, Producers, Accessories | - | (273,072) | (273,072) |
| 343 | | | 343 | | Prime Movers | - | - | - |
| 344 | | | 344 | | Generators | - | (3,526,120) | (3,526,120) |
| 345 | | | 345 | | Accessory Electric Equipment | - | (71,500) | (71,500) |
| 346 | | | 345.01 | | Computer Hardware | - | - | - |
| 347 | | | 345.02 | | Computer Software | - | - | - |
| 348 | | | 345.03 | | Communication Equipment | - | - | - |
| 349 | | | 346 | | Misc Power Plant Equipment | - | (526,238) | (526,238) |
| 350 | | | 347 | | Asset Retirement Costs - Other Production | - | - | - |
| 351 | **Total Other Production Plant - Gas** | | | | | - | (4,373,817) | (4,373,817) |
| 352 | | | | | | | | |
| 353 | | | | | | | | |
| 354 | **Total Other Production Gross Plant** | | | | | - | (4,373,817) | (4,373,817) |
| 355 | | | | | | | | |
| 356 | **Total Gross Plant Production** | | | | | - | (19,925,725) | (19,925,725) |
| 357 | | | | | | | | |
| 358 | | | | | | | | |

| | A | B | C | D | E | BE | BF | BG |
|---|---|---|---|---|---|---|---|---|
| 1 | **Public Service Company of New Mexico** | | | | | | | |
| 2 | **Schedule B-3** | | | | | | | |
| 3 | **Original Cost of Plant In Service by Monthly Balances** | | | | | | | |
| 4 | **Base Period Ending 6/30/2026** | | | | | | | |
| 5 | **Test Period Ending 9/30/2028** | | | | | | | |
| 6 | Link to WP Plant Lead Sheet | | | | | | | |
| 7 | | | | | | | | |
| 8 | **Base Period data is historical Information from the Company's Books and Records.** | | | | | | | |
| 9 | This schedule is sponsored by PNM Witness Gutierrez | | | | | | | |
| 10 | **Location** | **Location Number Note 6** | **FERC** | **Loc/ FERC** | **FERC Description** | **Shared Service Allocation Note 4** | **Test Period 13 Month Average Adjustment** | **Total Test Period Adjustments** |
| 359 | **Total Gross Energy Storage Plant** | | | | | | | |
| 386 | **All - Energy Storage** | | 387.01 | 387.01 | Land & Land Rights | | - | - |
| 387 | | | 387.02 | 387.02 | Structures & Improvements | | - | - |
| 388 | | | 387.03 | 387.03 | Energy Storage Equipment | | (493,617) | (493,617) |
| 389 | | | 387.05 | 387.05 | Collector System | | - | - |
| 390 | | | 387.06 | 387.06 | Generator Step-Up Transformers (GSU) | | - | - |
| 391 | | | 387.07 | 387.07 | Inverters | | - | - |
| 392 | | | 387.08 | 387.08 | Computer Hardware | | - | - |
| 393 | | | 387.09 | 387.09 | Computer Software | | - | - |
| 394 | | | 387.10 | 387.10 | Communication Equipment | | - | - |
| 395 | | | 387.11 | 387.11 | Misc. Energy Storage Equipment | | - | - |
| 396 | | | 387.12 | 387.12 | Asset Retirement Costs for Energy Storage | | - | - |
| 397 | **Total Gross Energy Storage Plant** | | | | | - | (493,617) | (493,617) |
| 398 | | | | | | | | |
| 399 | | | | | | | | |
| 400 | **Gross Plant Transmission Plant** | | | | | | | |
| 401 | | | | | | | | |
| 402 | | | | | | | | |
| 453 | **All - Transmission** | | | | | | | |
| 454 | | 650 | 350 | 650350 | Land and Land Rights | - | (1,476,890) | (1,476,890) |
| 455 | | 650 | 350.1 | 650350.1 | Land - Right of Way | - | (6,756) | (6,756) |
| 456 | | 650 | 351.01 | 650350.01 | Computer Hardware | - | (1,957,985) | (1,957,985) |
| 457 | | 650 | 351.02 | 650350.02 | Computer Software | - | (1,470,360) | (1,470,360) |
| 458 | | 650 | 351.03 | 650350.03 | Communication Equipment | - | (2,933,604) | (2,933,604) |
| 459 | | 650 | 352 | 650352 | Structures and Improvements | - | (15,962,646) | (15,962,646) |
| 460 | | 650 | 353 | 650353 | Station Equipment | - | (89,968,372) | (89,968,372) |
| 461 | | 650 | 353.1 | 650353.1 | Station Equipment - Step-up Xfmr and Aux | - | (57,330) | (57,330) |
| 462 | | 650 | 354 | 650354 | Towers and Fixtures | - | (5,715,072) | (5,715,072) |
| 463 | | 650 | 355 | 650355 | Poles and Fixtures | - | (8,901,234) | (8,901,234) |
| 464 | | 650 | 356 | 650356 | Overhead Conductors and Devices | - | (2,516,611) | (2,516,611) |
| 465 | | 650 | 357 | 650357 | Underground Conduit | - | (90,495) | (90,495) |
| 466 | | 650 | 359 | 650359 | Roads and Trails | - | 576 | 576 |
| 467 | **Total Gross Plant Transmission Plant** | | | | | - | (131,056,779) | (131,056,779) |
| 468 | | | | | | | | |

| | A | B | C | D | E | BE | BF | BG |
|---|---|---|---|---|---|---|---|---|
| 1 | **Public Service Company of New Mexico** | | | | | | | |
| 2 | **Schedule B-3** | | | | | | | |
| 3 | **Original Cost of Plant In Service by Monthly Balances** | | | | | | | |
| 4 | **Base Period Ending 6/30/2026** | | | | | | | |
| 5 | **Test Period Ending 9/30/2028** | | | | | | | |
| 6 | Link to WP Plant Lead Sheet | | | | | | | |
| 7 | | | | | | | | |
| 8 | **Base Period data is historical Information from the Company's Books and Records.** | | | | | | | |
| 9 | This schedule is sponsored by PNM Witness Gutierrez | | | | | | | |
| 10 | **Location** | **Location Number Note 6** | **FERC** | **Loc/ FERC** | **FERC Description** | **Shared Service Allocation Note 4** | **Test Period 13 Month Average Adjustment** | **Total Test Period Adjustments** |
| 469 | | | | | | | | |
| 470 | | | | | | | | |
| 471 | **Gross Plant Distribution Plant** | | | | | | | |
| 665 | **All - Distribution** | | | | | | | |
| 666 | | | 360 | | Land and Land Rights | | (3,025,835) | (3,025,835) |
| 667 | | | 360.1 | | Land - Right of Way | | (586,585) | (586,585) |
| 668 | | | 361 | | Structures and Improvements | | (4,442,317) | (4,442,317) |
| 669 | | | 362 | | Station Equipment | | (25,578,056) | (25,578,056) |
| 670 | | | 363.01 | | Computer Hardware | | (3,215,628) | (3,215,628) |
| 671 | | | 363.02 | | Computer Software | | (10,901,579) | (10,901,579) |
| 672 | | | 363.03 | | Communication Equipment | | (11,196,144) | (11,196,144) |
| 673 | | | 364 | | Poles, Towers and Fixtures | | (27,301,813) | (27,301,813) |
| 674 | | | 365 | | Overhead Conductors and Devices | | (20,694,026) | (20,694,026) |
| 675 | | | 366 | | Underground Conduit | | (10,787,038) | (10,787,038) |
| 676 | | | 367 | | Underground Conductors and Devices | | (23,794,177) | (23,794,177) |
| 677 | | | 368 | | Line Transformers | | (6,624,823) | (6,624,823) |
| 678 | | | 369 | | Services | | (2,137,803) | (2,137,803) |
| 679 | | | 369.1 | | Services - Underground | | (7,262,445) | (7,262,445) |
| 680 | | | 370 | | Meters Net Plant - PNM | | 12,259,910 | 12,259,910 |
| 681 | | | 370.4 | | Meters Net Plant - Grid Mod | | (16,242,186) | (16,242,186) |
| 682 | | | 371 | | Installations on Customers' Premises | | - | - |
| 683 | | | 371.1 | | Leased Flood Lighting | | - | - |
| 684 | | | 373 | | Street Lighting and Signal Systems | | (2,978,007) | (2,978,007) |
| 685 | | | 374 | | Asset Retirement Costs - Distribution | | - | - |
| 686 | **Total Gross Plant Distribution Plant** | | | | | - | (164,508,554) | (164,508,554) |
| 687 | | | | | | | | |

| | A | B | C | D | E | BE | BF | BG |
|---|---|---|---|---|---|---|---|---|
| 1 | **Public Service Company of New Mexico** | | | | | | | |
| 2 | **Schedule B-3** | | | | | | | |
| 3 | **Original Cost of Plant In Service by Monthly Balances** | | | | | | | |
| 4 | **Base Period Ending 6/30/2026** | | | | | | | |
| 5 | **Test Period Ending 9/30/2028** | | | | | | | |
| 6 | Link to WP Plant Lead Sheet | | | | | | | |
| 7 | | | | | | | | |
| 8 | **Base Period data is historical Information from the Company's Books and Records.** | | | | | | | |
| 9 | This schedule is sponsored by PNM Witness Gutierrez | | | | | | | |
| 10 | **Location** | **Location Number Note 6** | **FERC** | **Loc/ FERC** | **FERC Description** | **Shared Service Allocation Note 4** | **Test Period 13 Month Average Adjustment** | **Total Test Period Adjustments** |
| 688 | | | | | | | | |
| 689 | **Gross Plant G&I Plant (303,389-399)** | | | | | | | |
| 719 | **Total General & Intangible Plant** | | | | | | | |
| 720 | | | 303 | 303 | Miscellaneous Intangible Plant | - | - | - |
| 721 | | | 389 | 389 | Land and Land Rights | - | - | - |
| 722 | | | 390 | 390 | Structures and Improvements | - | (5,198,474) | (5,198,474) |
| 723 | | | 390.1 | 390.1 | Bulk Power Office Building Remodeling | - | 5,288 | 5,288 |
| 724 | | | 390.2 | 390.2 | Bulk Power Office Building | - | - | - |
| 725 | | | 391 | 391 | Office Furniture and Equipment | - | (19,483) | (19,483) |
| 726 | | | 391.1 | 391.1 | Office Furniture and Equipment - PC System | - | - | - |
| 727 | | | 391.2 | 391.2 | Office Furniture and Equipment - PC's | - | - | - |
| 728 | | | 391.3 | 391.3 | Computer Hardware | - | - | - |
| 729 | | | 391.5 | 391.5 | Computer Hardware - Solar | - | - | - |
| 730 | | | 391.7 | 391.7 | Computer Hardware | - | - | - |
| 731 | | | 392 | 392 | Transportation Equipment - Light | - | (102,322) | (102,322) |
| 732 | | | 392.1 | 392.1 | Transportation Equipment - Heavy | - | 88,330 | 88,330 |
| 733 | | | 392.2 | 392.2 | Transportation Equipment - Trailers | - | (20,328) | (20,328) |
| 734 | | | 392.4 | 392.4 | Transportation Equipment - Leaseback | - | - | - |
| 735 | | | 393 | 393 | Stores Equipment | - | 2,860 | 2,860 |
| 736 | | | 394 | 394 | Tools, Shop & Garage Equipment | - | (15,326) | (15,326) |
| 737 | | | 395 | 395 | Laboratory Equipment | - | - | - |
| 738 | | | 396 | 396 | Power Operated Equipment | - | (29,380) | (29,380) |
| 739 | | | 397.01 | 397.01 | Computer Hardware | - | (3,839) | (3,839) |
| 740 | | | 397.02 | 397.02 | Computer Software | - | (2,801,729) | (2,801,729) |
| 741 | | | 397.03 | 397.03 | Communication Equipment | - | - | - |
| 742 | | | 398 | 398 | Miscellaneous Equipment | - | (519,565) | (519,565) |
| 743 | | | 399.1 | 399.1 | ARO General Plant-1 | - | - | - |
| 744 | **Total Gross Plant G&I Plant - PNM** | | | | | - | (8,613,966) | (8,613,966) |
| 745 | | | | | | | | |
| 746 | **Total Electric Plant In Service** | | 101/106 | | | - | (324,598,640) | (324,598,640) |
| 747 | | | | | | | | |
| 748 | **Electric Plant Purchased** | | 102 | | | | | |
| 749 | | | | | | | | |
| 750 | **Electric Plant Acquisition Adjustment** | | | | Acq. Adj. - Palo Verde Unit 1&2 (Drexel) | | - | - |
| 751 | | | | | Acq. Adj. - Palo Verde Unit 2 (First Chicago) | | 416,027 | 416,027 |
| 752 | | | | | Acq. Adj. - (EIP) | | - | - |
| 753 | **Electric Plant Acquisition Adjustment** | | 114 | | | - | 416,027 | 416,027 |
| 754 | | | | | | | | |
| 755 | **Total Electric Plant** | | | | | - | (324,182,614) | (324,182,614) |
| 756 | | | | | | | | |
| 757 | | | | | | | | |

| | A | B | C | D | E | BE | BF | BG |
|---|---|---|---|---|---|---|---|---|
| 1 | **Public Service Company of New Mexico** | | | | | | | |
| 2 | **Schedule B-3** | | | | | | | |
| 3 | **Original Cost of Plant In Service by Monthly Balances** | | | | | | | |
| 4 | **Base Period Ending 6/30/2026** | | | | | | | |
| 5 | **Test Period Ending 9/30/2028** | | | | | | | |
| 6 | Link to WP Plant Lead Sheet | | | | | | | |
| 7 | | | | | | | | |
| 8 | **Base Period data is historical Information from the Company's Books and Records.** | | | | | | | |
| 9 | This schedule is sponsored by PNM Witness Gutierrez | | | | | | | |
| 10 | **Location** | **Location Number Note 6** | **FERC** | **Loc/ FERC** | **FERC Description** | **Shared Service Allocation Note 4** | **Test Period 13 Month Average Adjustment** | **Total Test Period Adjustments** |
| 758 | **Corporate Unallocated** | 900 | 303 | 900303 | Miscellaneous Intangible Plant | - | - | - |
| 759 | | 900 | 389 | 900389 | Land and Land Rights | (724,578) | - | (724,578) |
| 760 | | 900 | 390 | 900390 | Structures and Improvements | (23,226,264) | (2,644,093) | (25,870,357) |
| 761 | | 900 | 390.1 | 900390.1 | Bulk Power Office Building Remodeling | - | - | - |
| 762 | | 900 | 390.2 | 900390.2 | Bulk Power Office Building | - | - | - |
| 763 | | 900 | 391 | 900391 | Office Furniture and Equipment | (717,649) | (274,360) | (992,009) |
| 764 | | 900 | 391.1 | 900391.1 | Office Furniture and Equipment - PC System | - | - | - |
| 765 | | 900 | 391.2 | 900391.2 | Office Furniture and Equipment - PC's | - | - | - |
| 766 | | 900 | 391.3 | 900391.3 | Computer Hardware | - | - | - |
| 767 | | 900 | 391.5 | 900391.5 | Computer Hardware - Solar | - | - | - |
| 768 | | 900 | 391.7 | 900391.7 | Computer Hardware | - | - | - |
| 769 | | 900 | 392 | 900392 | Transportation Equipment - Light | (131,864) | - | (131,864) |
| 770 | | 900 | 392.1 | 900392.1 | Transportation Equipment - Heavy | (16,476) | - | (16,476) |
| 771 | | 900 | 392.2 | 900392.2 | Transportation Equipment - Trailers | (3,866) | - | (3,866) |
| 772 | | 900 | 392.4 | 900392.4 | Transportation Equipment - Leaseback | 95 | 72 | 167 |
| 773 | | 900 | 393 | 900393 | Stores Equipment | - | - | - |
| 774 | | 900 | 394 | 900394 | Tools, Shop & Garage Equipment | (154,889) | (1,847) | (156,736) |
| 775 | | 900 | 395 | 900395 | Laboratory Equipment | - | - | - |
| 776 | | 900 | 396 | 900396 | Power Operated Equipment | (8,230) | - | (8,230) |
| 777 | | 900 | 397 | 900397 | Communication Equipment | - | - | - |
| 778 | | 900 | 397.01 | 900397.01 | Computer Hardware | (10,749,838) | (2,237,892) | (12,987,730) |
| 779 | | 900 | 397.02 | 900397.02 | Computer Software | (95,521,723) | (20,966,395) | (116,488,118) |
| 780 | | 900 | 397.03 | 900397.03 | Communication Equipment | (1,208,888) | 1,252,788 | 43,900 |
| 781 | | 900 | 397.2 | 900397.2 | Communication Equipment | - | - | - |
| 782 | | 900 | 397.3 | 900397.3 | Communication Equipment | - | - | - |
| 783 | | 900 | 398 | 900398 | Miscellaneous Equipment | - | - | - |
| 784 | | 900 | 399.1 | 900399.1 | ARO General Plant-1 | - | - | - |
| 785 | | | | | | | | |
| 786 | **Total Corporate Unallocated** | | | | | (132,464,169) | (24,871,727) | (157,335,897) |
| 787 | | | | | | | | |
| 788 | **al Electric Plant In Service - with Corporate** | | 101/106 | | | (132,464,169) | (349,470,368) | (481,934,537) |
| 790 | **Electric Plant Purchased - with Corporate** | | 102 | | | | | |
| 792 | **Electric Plant Acq. Adj. - with Corporate** | | 114 | | | - | 416,027 | 416,027 |
| 793 | | | | | | | | |
| 794 | **Total Electric Plant - with Corporate** | | | | | (132,464,169) | (349,054,341) | (481,518,510) |

| | A | B | C | D | E | BH | BI |
|---|---|---|---|---|---|---|---|
| 1 | **Public Service Company of New Mexico** | | | | | | |
| 2 | **Schedule B-3** | | | | | | |
| 3 | **Original Cost of Plant In Service by Monthly Balances** | | | | | | |
| 4 | **Base Period Ending 6/30/2026** | | | | | | |
| 5 | **Test Period Ending 9/30/2028** | | | | | | |
| 6 | Link to WP Plant Lead Sheet | | | | | | |
| 7 | | | | | | | |
| 8 | **Base Period data is historical Information from the Company's Books and Records.** | | | | | | |
| 9 | This schedule is sponsored by PNM Witness Gutierrez | | | | | | |
| 10 | **Location** | **Location Number Note 6** | **FERC** | **Loc/ FERC** | **FERC Description** | **Adjusted Test Period Ending Balance 9/30/28** | **Reference** |
| 11 | | | | | | | |
| 12 | **Production Plant** | | | | | | |
| 13 | **Steam Production** | | | | | | |
| 56 | **All - Steam** | | | | | | |
| 57 | | | 310 | | Land and Land Rights | 618,487 | |
| 58 | | | 310.1 | | Land Right of Way | 22,368 | |
| 59 | | | 311 | | Structures & Improvements | 35,479,079 | |
| 60 | | | 312 | | Boiler Plant Equipment | 261,752,449 | |
| 61 | | | 314 | | Turbogenerator Units | 70,145,027 | |
| 62 | | | 315 | | Accessory Electric Equipment | 20,388,784 | |
| 63 | | | 315.01 | | Computer Hardware | - | |
| 64 | | | 315.02 | | Computer Software | 1,362,246 | |
| 65 | | | 315.03 | | Communication Equipment | 334,053 | |
| 66 | | | 316 | | Misc Power Plant Equipment | 28,343,056 | |
| 67 | | | 317 | | Asset Retirement Costs - Steam | 10,249,476 | |
| 68 | **Total Steam Production Gross Plant** | | | | | 428,695,025 | |
| 69 | | | | | | | |
| 70 | | | | | | | |
| 71 | **Nuclear Production** | | | | | | |
| 129 | **All - Nuclear** | | | | | | |
| 130 | | | 320 | | Land and Land Rights | 439,822 | |
| 131 | | | 320.1 | | Land - Right of Way | 44,622 | |
| 132 | | | 321 | | Structures and Improvements | 210,844,008 | |
| 133 | | | 322 | | Reactor Plant Equipment | 357,097,785 | |
| 134 | | | 323 | | Turbogenerator Units | 114,105,059 | |
| 135 | | | 324 | | Accessory Electric Equipment | 60,717,313 | |
| 136 | | | 324.01 | | Computer Hardware | - | |
| 137 | | | 324.02 | | Computer Software | 15,243,663 | |
| 138 | | | 324.03 | | Communication Equipment | 766,347 | |
| 139 | | | 325 | | Misc Power Plant Equipment | 76,785,228 | |
| 140 | | | 326 | | Asset Retirement Costs Nuclear Prod Plant | - | |
| 141 | **Total Nuclear Production Gross Plant** | | | | | 836,043,847 | |

| | A | B | C | D | E | BH | BI |
|---|---|---|---|---|---|---|---|
| 1 | **Public Service Company of New Mexico** | | | | | | |
| 2 | **Schedule B-3** | | | | | | |
| 3 | **Original Cost of Plant In Service by Monthly Balances** | | | | | | |
| 4 | **Base Period Ending 6/30/2026** | | | | | | |
| 5 | **Test Period Ending 9/30/2028** | | | | | | |
| 6 | Link to WP Plant Lead Sheet | | | | | | |
| 7 | | | | | | | |
| 8 | **Base Period data is historical Information from the Company's Books and Records.** | | | | | | |
| 9 | This schedule is sponsored by PNM Witness Gutierrez | | | | | | |
| 10 | **Location** | **Location Number Note 6** | **FERC** | **Loc/ FERC** | **FERC Description** | **Adjusted Test Period Ending Balance 9/30/28** | **Reference** |
| 142 | | | | | | | |
| 143 | | | | | | | |
| 144 | **Solar Production** | | | | | | |
| 237 | **All - Solar** | | | | | | |
| 238 | | | 338.01 | | Land & Land Rights | 11,040,948 | |
| 239 | | | 338.02 | | Structures and Improvements | 268,299 | |
| 240 | | | 338.04 | | Solar Panels | 440,083,977 | |
| 241 | | | 338.05 | | Collector System | 8,264,812 | |
| 242 | | | 338.07 | | Solar Inverters | 10,127,593 | |
| 243 | | | 338.08 | | Other Accessory Electrical Equipment | 23,775,507 | |
| 244 | | | 338.09 | | Computer Hardware | 51,760 | |
| 245 | | | 338.10 | | Computer Software | - | |
| 246 | | | 338.11 | | Communication Equipment | 637,577 | |
| 247 | | | 338.12 | | Misc. Power Plant Equipment | 5,228,178 | |
| 248 | **Total Solar Production Gross Plant** | | | | | 499,478,651 | |
| 249 | | | | | | | |
| 250 | **Other Production** | | | | | | |
| 251 | | | | | | | |
| 252 | **Other Production - Gas:** | | | | | | |
| 339 | **All - Gas** | | 340 | | Land and Land Rights | 7,079,884 | |
| 340 | | | 340.1 | | Land - Right of Way | 1,959,313 | |
| 341 | | | 341 | | Structures and Improvements | 95,293,145 | |
| 342 | | | 342 | | Fuel Holders, Producers, Accessories | 130,552,263 | |
| 343 | | | 343 | | Prime Movers | - | |
| 344 | | | 344 | | Generators | 268,977,390 | |
| 345 | | | 345 | | Accessory Electric Equipment | 27,862,221 | |
| 346 | | | 345.01 | | Computer Hardware | - | |
| 347 | | | 345.02 | | Computer Software | 60,931 | |
| 348 | | | 345.03 | | Communication Equipment | 38,862 | |
| 349 | | | 346 | | Misc Power Plant Equipment | 50,558,941 | |
| 350 | | | 347 | | Asset Retirement Costs - Other Production | 7,008,573 | |
| 351 | **Total Other Production Plant - Gas** | | | | | 589,391,523 | |
| 352 | | | | | | | |
| 353 | | | | | | | |
| 354 | **Total Other Production Gross Plant** | | | | | 589,391,523 | |
| 355 | | | | | | | |
| 356 | **Total Gross Plant Production** | | | | | 2,353,609,045 | |
| 357 | | | | | | | |
| 358 | | | | | | | |

| | A | B | C | D | E | BH | BI |
|---|---|---|---|---|---|---|---|
| 1 | **Public Service Company of New Mexico** | | | | | | |
| 2 | **Schedule B-3** | | | | | | |
| 3 | **Original Cost of Plant In Service by Monthly Balances** | | | | | | |
| 4 | **Base Period Ending 6/30/2026** | | | | | | |
| 5 | **Test Period Ending 9/30/2028** | | | | | | |
| 6 | Link to WP Plant Lead Sheet | | | | | | |
| 7 | | | | | | | |
| 8 | **Base Period data is historical Information from the Company's Books and Records.** | | | | | | |
| 9 | This schedule is sponsored by PNM Witness Gutierrez | | | | | | |
| 10 | **Location** | **Location Number Note 6** | **FERC** | **Loc/ FERC** | **FERC Description** | **Adjusted Test Period Ending Balance 9/30/28** | **Reference** |
| 359 | **Total Gross Energy Storage Plant** | | | | | | |
| 386 | **All - Energy Storage** | | 387.01 | 387.01 | Land & Land Rights | - | |
| 387 | | | 387.02 | 387.02 | Structures & Improvements | 23,176,806 | |
| 388 | | | 387.03 | 387.03 | Energy Storage Equipment | 209,953,512 | |
| 389 | | | 387.05 | 387.05 | Collector System | 25,624,069 | |
| 390 | | | 387.06 | 387.06 | Generator Step-Up Transformers (GSU) | 59,151,201 | |
| 391 | | | 387.07 | 387.07 | Inverters | - | |
| 392 | | | 387.08 | 387.08 | Computer Hardware | 5,348,140 | |
| 393 | | | 387.09 | 387.09 | Computer Software | 965,150 | |
| 394 | | | 387.10 | 387.10 | Communication Equipment | 1,233,478 | |
| 395 | | | 387.11 | 387.11 | Misc. Energy Storage Equipment | 7,837,251 | |
| 396 | | | 387.12 | 387.12 | Asset Retirement Costs for Energy Storage | - | |
| 397 | **Total Gross Energy Storage Plant** | | | | | 333,289,606 | |
| 398 | | | | | | | |
| 399 | | | | | | | |
| 400 | **Gross Plant Transmission Plant** | | | | | | |
| 401 | | | | | | | |
| 402 | | | | | | | |
| 453 | **All - Transmission** | | | | | | |
| 454 | | 650 | 350 | 650350 | Land and Land Rights | 84,254,673 | |
| 455 | | 650 | 350.1 | 650350.1 | Land - Right of Way | 54,004,437 | |
| 456 | | 650 | 351.01 | 650350.01 | Computer Hardware | 19,095,822 | |
| 457 | | 650 | 351.02 | 650350.02 | Computer Software | 10,678,524 | |
| 458 | | 650 | 351.03 | 650350.03 | Communication Equipment | 54,803,355 | |
| 459 | | 650 | 352 | 650352 | Structures and Improvements | 280,298,977 | |
| 460 | | 650 | 353 | 650353 | Station Equipment | 1,124,724,368 | |
| 461 | | 650 | 353.1 | 650353.1 | Station Equipment - Step-up Xfmr and Aux | 12,295,827 | |
| 462 | | 650 | 354 | 650354 | Towers and Fixtures | 66,836,163 | |
| 463 | | 650 | 355 | 650355 | Poles and Fixtures | 575,658,995 | |
| 464 | | 650 | 356 | 650356 | Overhead Conductors and Devices | 242,297,129 | |
| 465 | | 650 | 357 | 650357 | Underground Conduit | 810,763 | |
| 466 | | 650 | 359 | 650359 | Roads and Trails | 9,798,574 | |
| 467 | **Total Gross Plant Transmission Plant** | | | | | 2,535,557,608 | |
| 468 | | | | | | | |

| | A | B | C | D | E | BH | BI |
|---|---|---|---|---|---|---|---|
| 1 | **Public Service Company of New Mexico** | | | | | | |
| 2 | **Schedule B-3** | | | | | | |
| 3 | **Original Cost of Plant In Service by Monthly Balances** | | | | | | |
| 4 | **Base Period Ending 6/30/2026** | | | | | | |
| 5 | **Test Period Ending 9/30/2028** | | | | | | |
| 6 | Link to WP Plant Lead Sheet | | | | | | |
| 7 | | | | | | | |
| 8 | **Base Period data is historical Information from the Company's Books and Records.** | | | | | | |
| 9 | This schedule is sponsored by PNM Witness Gutierrez | | | | | | |
| 10 | **Location** | **Location Number Note 6** | **FERC** | **Loc/ FERC** | **FERC Description** | **Adjusted Test Period Ending Balance 9/30/28** | **Reference** |
| 469 | | | | | | | |
| 470 | | | | | | | |
| 471 | **Gross Plant Distribution Plant** | | | | | | |
| 665 | **All - Distribution** | | | | | | |
| 666 | | | 360 | | Land and Land Rights | 11,042,175 | |
| 667 | | | 360.1 | | Land - Right of Way | 4,734,069 | |
| 668 | | | 361 | | Structures and Improvements | 79,986,864 | |
| 669 | | | 362 | | Station Equipment | 414,547,960 | |
| 670 | | | 363.01 | | Computer Hardware | 25,033,422 | |
| 671 | | | 363.02 | | Computer Software | 106,963,123 | |
| 672 | | | 363.03 | | Communication Equipment | 46,642,379 | |
| 673 | | | 364 | | Poles, Towers and Fixtures | 543,923,632 | |
| 674 | | | 365 | | Overhead Conductors and Devices | 366,696,177 | |
| 675 | | | 366 | | Underground Conduit | 227,868,697 | |
| 676 | | | 367 | | Underground Conductors and Devices | 529,778,494 | |
| 677 | | | 368 | | Line Transformers | 310,860,210 | |
| 678 | | | 369 | | Services | 112,215,396 | |
| 679 | | | 369.1 | | Services - Underground | 209,716,640 | |
| 680 | | | 370 | | Meters Net Plant - PNM | 44,822,629 | |
| 681 | | | 370.4 | | Meters Net Plant - Grid Mod | 75,084,704 | |
| 682 | | | 371 | | Installations on Customers' Premises | 9,151,530 | |
| 683 | | | 371.1 | | Leased Flood Lighting | 307,353 | |
| 684 | | | 373 | | Street Lighting and Signal Systems | 39,817,029 | |
| 685 | | | 374 | | Asset Retirement Costs - Distribution | - | |
| 686 | **Total Gross Plant Distribution Plant** | | | | | 3,159,192,480 | |
| 687 | | | | | | | |

| | A | B | C | D | E | BH | BI |
|---|---|---|---|---|---|---|---|
| 1 | **Public Service Company of New Mexico** | | | | | | |
| 2 | **Schedule B-3** | | | | | | |
| 3 | **Original Cost of Plant In Service by Monthly Balances** | | | | | | |
| 4 | **Base Period Ending 6/30/2026** | | | | | | |
| 5 | **Test Period Ending 9/30/2028** | | | | | | |
| 6 | Link to WP Plant Lead Sheet | | | | | | |
| 7 | | | | | | | |
| 8 | **Base Period data is historical Information from the Company's Books and Records.** | | | | | | |
| 9 | This schedule is sponsored by PNM Witness Gutierrez | | | | | | |
| 10 | **Location** | **Location Number Note 6** | **FERC** | **Loc/ FERC** | **FERC Description** | **Adjusted Test Period Ending Balance 9/30/28** | **Reference** |
| 688 | | | | | | | |
| 689 | **Gross Plant G&I Plant (303,389-399)** | | | | | | |
| 719 | **Total General & Intangible Plant** | | | | | | |
| 720 | | | 303 | 303 | Miscellaneous Intangible Plant | - | |
| 721 | | | 389 | 389 | Land and Land Rights | 1,937,568 | |
| 722 | | | 390 | 390 | Structures and Improvements | 81,334,988 | |
| 723 | | | 390.1 | 390.1 | Bulk Power Office Building Remodeling | 5,865,726 | |
| 724 | | | 390.2 | 390.2 | Bulk Power Office Building | 5,945,142 | |
| 725 | | | 391 | 391 | Office Furniture and Equipment | 5,072,957 | |
| 726 | | | 391.1 | 391.1 | Office Furniture and Equipment - PC System | - | |
| 727 | | | 391.2 | 391.2 | Office Furniture and Equipment - PC's | - | |
| 728 | | | 391.3 | 391.3 | Computer Hardware | - | |
| 729 | | | 391.5 | 391.5 | Computer Hardware - Solar | - | |
| 730 | | | 391.7 | 391.7 | Computer Hardware | - | |
| 731 | | | 392 | 392 | Transportation Equipment - Light | 5,167,976 | |
| 732 | | | 392.1 | 392.1 | Transportation Equipment - Heavy | 4,816,040 | |
| 733 | | | 392.2 | 392.2 | Transportation Equipment - Trailers | 8,645,147 | |
| 734 | | | 392.4 | 392.4 | Transportation Equipment - Leaseback | - | |
| 735 | | | 393 | 393 | Stores Equipment | 96,668 | |
| 736 | | | 394 | 394 | Tools, Shop & Garage Equipment | 20,916,504 | |
| 737 | | | 395 | 395 | Laboratory Equipment | 206,265 | |
| 738 | | | 396 | 396 | Power Operated Equipment | 7,546,082 | |
| 739 | | | 397.01 | 397.01 | Computer Hardware | 862,559 | |
| 740 | | | 397.02 | 397.02 | Computer Software | 48,556,740 | |
| 741 | | | 397.03 | 397.03 | Communication Equipment | - | |
| 742 | | | 398 | 398 | Miscellaneous Equipment | 1,911,915 | |
| 743 | | | 399.1 | 399.1 | ARO General Plant-1 | 19,473 | |
| 744 | **Total Gross Plant G&I Plant - PNM** | | | | | 198,901,749 | |
| 745 | | | | | | | |
| 746 | **Total Electric Plant In Service** | | 101/106 | | | 8,580,550,488 | |
| 747 | | | | | | | |
| 748 | **Electric Plant Purchased** | | 102 | | | | |
| 749 | | | | | | | |
| 750 | **Electric Plant Acquisition Adjustment** | | | | Acq. Adj. - Palo Verde Unit 1&2 (Drexel) | - | |
| 751 | | | | | Acq. Adj. - Palo Verde Unit 2 (First Chicago) | 14,907,628 | |
| 752 | | | | | Acq. Adj. - (EIP) | - | |
| 753 | **Electric Plant Acquisition Adjustment** | | 114 | | | 14,907,628 | |
| 754 | | | | | | | |
| 755 | **Total Electric Plant** | | | | | 8,595,458,116 | |
| 756 | | | | | | | |
| 757 | | | | | | | |

| | A | B | C | D | E | BH | BI |
|---|---|---|---|---|---|---|---|
| 1 | **Public Service Company of New Mexico** | | | | | | |
| 2 | **Schedule B-3** | | | | | | |
| 3 | **Original Cost of Plant In Service by Monthly Balances** | | | | | | |
| 4 | **Base Period Ending 6/30/2026** | | | | | | |
| 5 | **Test Period Ending 9/30/2028** | | | | | | |
| 6 | Link to WP Plant Lead Sheet | | | | | | |
| 7 | | | | | | | |
| 8 | **Base Period data is historical Information from the Company's Books and Records.** | | | | | | |
| 9 | This schedule is sponsored by PNM Witness Gutierrez | | | | | | |
| 10 | **Location** | **Location Number Note 6** | **FERC** | **Loc/ FERC** | **FERC Description** | **Adjusted Test Period Ending Balance 9/30/28** | **Reference** |
| 758 | **Corporate Unallocated** | 900 | 303 | 900303 | Miscellaneous Intangible Plant | - | |
| 759 | | 900 | 389 | 900389 | Land and Land Rights | 4,408,750 | |
| 760 | | 900 | 390 | 900390 | Structures and Improvements | 62,235,785 | |
| 761 | | 900 | 390.1 | 900390.1 | Bulk Power Office Building Remodeling | - | |
| 762 | | 900 | 390.2 | 900390.2 | Bulk Power Office Building | - | |
| 763 | | 900 | 391 | 900391 | Office Furniture and Equipment | 1,428,144 | |
| 764 | | 900 | 391.1 | 900391.1 | Office Furniture and Equipment - PC System | - | |
| 765 | | 900 | 391.2 | 900391.2 | Office Furniture and Equipment - PC's | - | |
| 766 | | 900 | 391.3 | 900391.3 | Computer Hardware | - | |
| 767 | | 900 | 391.5 | 900391.5 | Computer Hardware - Solar | - | |
| 768 | | 900 | 391.7 | 900391.7 | Computer Hardware | - | |
| 769 | | 900 | 392 | 900392 | Transportation Equipment - Light | 218,466 | |
| 770 | | 900 | 392.1 | 900392.1 | Transportation Equipment - Heavy | 35,845 | |
| 771 | | 900 | 392.2 | 900392.2 | Transportation Equipment - Trailers | 6,406 | |
| 772 | | 900 | 392.4 | 900392.4 | Transportation Equipment - Leaseback | (157) | |
| 773 | | 900 | 393 | 900393 | Stores Equipment | - | |
| 774 | | 900 | 394 | 900394 | Tools, Shop & Garage Equipment | 279,993 | |
| 775 | | 900 | 395 | 900395 | Laboratory Equipment | - | |
| 776 | | 900 | 396 | 900396 | Power Operated Equipment | 17,905 | |
| 777 | | 900 | 397 | 900397 | Communication Equipment | - | |
| 778 | | 900 | 397.01 | 900397.01 | Computer Hardware | 21,067,225 | |
| 779 | | 900 | 397.02 | 900397.02 | Computer Software | 199,778,626 | |
| 780 | | 900 | 397.03 | 900397.03 | Communication Equipment | 2,002,822 | |
| 781 | | 900 | 397.2 | 900397.2 | Communication Equipment | - | |
| 782 | | 900 | 397.3 | 900397.3 | Communication Equipment | - | |
| 783 | | 900 | 398 | 900398 | Miscellaneous Equipment | - | |
| 784 | | 900 | 399.1 | 900399.1 | ARO General Plant-1 | - | |
| 785 | | | | | | | |
| 786 | **Total Corporate Unallocated** | | | | | 291,479,808 | |
| 787 | | | | | | | |
| 788 | **al Electric Plant In Service - with Corporate** | | 101/106 | | | 8,872,030,297 | |
| 789 | | | | | | | |
| 790 | **Electric Plant Purchased - with Corporate** | | 102 | | | | |
| 791 | | | | | | | |
| 792 | **Electric Plant Acq. Adj. - with Corporate** | | 114 | | | 14,907,628 | |
| 793 | | | | | | | |
| 794 | **Total Electric Plant - with Corporate** | | | | | 8,886,937,924 | |

| | A |
|---|---|
| 1 | **Public Service Company of New Mexico** |
| 2 | **Schedule B-3 (Notes)** |
| 3 | **Original Cost of Plant In Service by Monthly Balances** |
| 4 | Link to WP Plant Lead Sheet |
| 5 | |
| 6 | **Note 1**: This adjustment reflects the imprudence impairment consistent with the final order in NMPRC Case No. 22-00270-UT. For GAAP accounting purposes, this impairment was recorded to FERC Account 116 "Other Electric Plant Adjustments"; however for regulatory purposes, this adjustment is reclassified into FERC Account 101, to properly remove the amounts from rate base. |
| 7 | **Note 2:** The Palo Verde Asset Retirement Costs, recorded in plant in service, are not included in rate base, as final decommissioning of PV are ultimately funded to an external trust, and recovery of decommissioning expense from PNM Retail customers are based on those funding amounts. This treatment is consistent with prior rate cases. |
| 8 | **Note 3**: Adjustment reflects reclassification of capital assets at the end of the Base Period associated with Palo Verde Leased Capacity. Leased Capacity assets approved to be recovered as through regulatory assets have been reclassified to the Regulatory Asset Workpapers. This adjustment is consistent with the treatment in the Final Order of NMPRC Case No. 22-00270-UT. |
| 9 | **Note 4:** Reflects capital investment on Shared Services that are allocated to subsidiaries other than PNM. See WP Plant - 8, columns T, U and V for Base Period allocation to PNM. The allocation of Shared Services is based on the 13-month average at the end of the Test Period. For the Test Period, the 13-month average was calculated on a total company basis prior to the allocation of assets to PNM. Please refer to WP Plant - 8, columns BD, BE and BF for Test Period allocation to PNM. |
| 10 | **Note 5**: FERC accounts 365 (Overhead Conductors and Devices), 366 (Underground Conduit) and 367 (Underground Conductors and Devices) are allocated between Primary and Secondary System Distribution based on conductor footage study. See WP Plant -1 for allocation percentages. Also see the Direct Testimony of PNM witness Gray for further discussion on the conductor footage study. This note relates to information grouped within the outline function and is not visible on the printed schedule. |
| 11 | **Note 6**: Information in Column B "Location Number" is utilized to identify the applicable depreciation rates. |
| 12 | **General Notes**: |
| 13 | Please see the Direct Testimonies of PNM Witnesses Gray, Flores-Olivas, Sanchez, Phelps, and Gutierrez for discussion of adjustments/changes to the Base Period, Test Period. |
| 14 | Please see WP Plant - 1a for variance between adjusted Base Period and Test Period balances. |
| 15 | The electronic version of this worksheet uses the Microsoft excel outline function. This function groups the elements of cost, and or columns for print formatting purposes. |

# PNM Schedule B-4

Construction Work in Progress

| | A | B | C | D | E | F |
|---|---|---|---|---|---|---|
| 1 | **Public Service Company of New Mexico** | | | | | |
| 2 | **Schedule B-4** | | | | | |
| 3 | **Construction Work In Progress** | | | | | |
| 4 | **Base Period Ending 6/30/2026** | | | | | |
| 5 | **Test Period Ending 9/30/2028** | | | | | |
| 6 | **This schedule is sponsored by PNM Witness Gutierrez** | | | | | |
| 7 | **Project #** | **Project Description** | **Notes** | **Estimated Completion Date** | **Estimated Cost of Project** | **Base Period Beginning Balance Jul-25** |
| 8 | | **Distribution** | | | | |
| 9 | 01099707 | PNM Electric Salvage | (5) | Blanket | Blanket | (3,449) |
| 10 | 09128021 | Customer Experience Program 2021 | (5) | 12/9/2025 | 454,381 | 10 |
| 11 | 09128026 | Customer Experience Program 2026 | (3) | 12/13/2026 | 710,360 | - |
| 12 | 09128027 | Customer Experience Program 2027 | (3) | 12/31/2027 | 102,109 | - |
| 13 | 09128052 | Co 1-Tibco Integration Suite Upg To | (5) | 3/4/2026 | - | - |
| 14 | 09128127 | Liferay & PNM.com Platform Upg 2027 | (3) | 12/31/2027 | 1,069,486 | - |
| 15 | 09128128 | CIS Replacement | (5) | 12/31/2030 | 59,411,115 | - |
| 16 | 09128323 | ArcFM Upgr to Utility Network Co 1 | (5) | 3/31/2026 | 70,084 | 61,545 |
| 17 | 09128325 | Community Solar 2025 Cust Consent | (5) | 3/31/2026 | 120,413 | 43,815 |
| 18 | 09128326 | Customer Comm CANSPAM Pref 2026 | (3) | 7/31/2026 | 37,126 | - |
| 19 | 09128327 | New Customer Comm Platform 2027 | (3) | 12/31/2027 | 1,999,248 | - |
| 20 | 09128328 | Community Solar Cons Bill 2028 | (5) | 12/31/2028 | 497,319 | - |
| 21 | 09128525 | NM Cascade Upgrade 2025 | (5) | 5/26/2026 | 328,690 | 106,115 |
| 22 | 09128528 | PNM.com Redesign 2028 | (5) | 12/31/2028 | 200,091 | - |
| 23 | 09128625 | Community Solar-PRC Additions 2025 | (5) | 6/30/2026 | 247,474 | - |
| 24 | 09128725 | NICE InContact Program | (3) | 12/31/2027 | 4,829,603 | - |
| 25 | 09128822 | PNM Bill Redesign | (5) | 3/4/2026 | 1,433,188 | 280,352 |
| 26 | 09132025 | Security Video System 2025-NM | (5) | 3/31/2026 | 139,512 | - |
| 27 | 10000105 | Residential Line Extensions | (5) | Blanket | Blanket | (495) |
| 28 | 10000107 | Line Extensions - Residential | (4) | Blanket | Blanket | 1,103,115 |
| 29 | 10000205 | Commercial Line Extensions | (5) | Blanket | Blanket | 17,486 |
| 30 | 10000206 | Line Extensions - Commercial | (5) | Blanket | Blanket | 7,761 |
| 31 | 10000207 | Line Extensions - Commercial | (4) | Blanket | Blanket | 796,838 |
| 32 | 10000241 | Line Extensions - Residential | (5) | Blanket | Blanket | (5,856) |
| 33 | 10000407 | Line Extensions - Misc. | (6) | Blanket | Blanket | (20,817) |
| 34 | 10000507 | Lighting | (4) | Blanket | Blanket | 78 |
| 35 | 10000508 | Lighting T&D | (2) | Blanket | Blanket | 734,780 |
| 36 | 10000607 | Distr. Remove & Replace | (2) | Blanket | Blanket | 1,223,759 |
| 37 | 10000608 | Dist. Remove & Replace T&D | (2) | Blanket | Blanket | 1,087,949 |

| | A | B | C | D | E | F |
|---|---|---|---|---|---|---|
| 1 | **Public Service Company of New Mexico** | | | | | |
| 2 | **Schedule B-4** | | | | | |
| 3 | **Construction Work In Progress** | | | | | |
| 4 | **Base Period Ending 6/30/2026** | | | | | |
| 5 | **Test Period Ending 9/30/2028** | | | | | |
| 6 | **This schedule is sponsored by PNM Witness Gutierrez** | | | | | |
| 7 | **Project #** | **Project Description** | **Notes** | **Estimated Completion Date** | **Estimated Cost of Project** | **Base Period Beginning Balance Jul-25** |
| 38 | 10000707 | Distr. System Improvements | (2) | Blanket | Blanket | 2,716,487 |
| 39 | 10000807 | Services | (4) | Blanket | Blanket | 3,409,766 |
| 40 | 10000907 | Transformers | (4) | Blanket | Blanket | 942,134 |
| 41 | 10001007 | Meter Equipment | (4) | Blanket | Blanket | 24,835 |
| 42 | 10001207 | Pole Replacements | (5) | Blanket | Blanket | 8,832 |
| 43 | 10001307 | Cable Replacement | (2) | Blanket | Blanket | 83,284 |
| 44 | 10001617 | Voltage Cont Cap Upgrade to Two Way | (5) | 7/21/2025 | 202,898 | (0) |
| 45 | 10001626 | CENT11 & VOLC11 Conductor Upgrade | (1) | 12/31/2030 | 743,578 | - |
| 46 | 10001627 | Central OSMOSE Replacements 27-28 | (2) | 12/31/2028 | 5,202,518 | - |
| 47 | 10001707 | Albuquerque Pure Project | (2) | Blanket | Blanket | 714,306 |
| 48 | 10001717 | 8th Street Circuit Rebuild | (5) | 10/1/2026 | 21,561 | 20,176 |
| 49 | 10001725 | Project Array | (5) | 10/1/2026 | 948,257 | 572,349 |
| 50 | 10001826 | San Pedro Widening | (2) | 12/31/2028 | 230,883 | - |
| 51 | 10001922 | Overlook Distribution Rebuild | (2) | 12/31/2027 | 11,126,590 | 1,746,357 |
| 52 | 10001924 | 614 Cedar Hill Rd NE | (5) | 12/31/2026 | 1,458,188 | 127,027 |
| 53 | 10001928 | Corrales Bluff 14 Feeder | (5) | 12/31/2029 | 6,084,104 | - |
| 54 | 10002010 | Four Hills 13 to Lawrence 14 Feeder | (1) | 12/31/2027 | 871,978 | 191,676 |
| 55 | 10002022 | Valencia Substation Rebuild | (1) | 3/31/2027 | 6,432,439 | 1,741,146 |
| 56 | 10002125 | Lightning Mitigation 2025-2026 | (2) | 12/31/2027 | 603,332 | - |
| 57 | 10002143 | Asset Health Mntrg-Event-24-28 Co1 | (5) | 12/31/2025 | 175,775 | 173,980 |
| 58 | 10002224 | AT&T Vault Relocation | (5) | 12/31/2026 | - | (808,389) |
| 59 | 10002316 | Bird Guard Reliability | (2) | Blanket | Blanket | 186,721 |
| 60 | 10002325 | 4th Street and St Mary's Way | (2) | 12/31/2026 | 435,997 | - |
| 61 | 10002326 | Angel Rd - CRP 23-24 | (2) | 12/31/2026 | 1,260,300 | - |
| 62 | 10002327 | Central Feeder Upgrades | (1) | 12/31/2027 | 3,729,523 | - |
| 63 | 10002421 | Sandia 46kV Breaker Replacement | (1) | 12/31/2028 | 8,472,675 | 1,156,285 |
| 64 | 10002425 | Camino Sin Pasada - CRP2324 | (2) | 12/31/2026 | 887,827 | - |
| 65 | 10002516 | Pole Grounds Co01 | (2) | Blanket | Blanket | 4,435 |
| 66 | 10003020 | ELDO12 Feeder Rebuild | (1) | 12/31/2026 | 12,467,886 | 3,419,107 |
| 67 | 10003125 | Project Chase | (5) | 1/31/2026 | (40,000) | (40,000) |

| | A | B | C | D | E | F |
|---|---|---|---|---|---|---|
| 1 | **Public Service Company of New Mexico** | | | | | |
| 2 | **Schedule B-4** | | | | | |
| 3 | **Construction Work In Progress** | | | | | |
| 4 | **Base Period Ending 6/30/2026** | | | | | |
| 5 | **Test Period Ending 9/30/2028** | | | | | |
| 6 | **This schedule is sponsored by PNM Witness Gutierrez** | | | | | |
| 7 | **Project #** | **Project Description** | **Notes** | **Estimated Completion Date** | **Estimated Cost of Project** | **Base Period Beginning Balance Jul-25** |
| 68 | 10003225 | Sandia 46kV Relay Replacement | (1) | 12/31/2026 | 5,893,689 | 696,641 |
| 69 | 10003521 | LSCH12 Feeder Rebuild | (1) | 12/31/2026 | 13,999,344 | 1,477,516 |
| 70 | 10003621 | SOCO12 Feeder Rebuild | (5) | 6/30/2026 | 18,281,441 | - |
| 71 | 10003721 | BACA12 Feeder Rebuild | (5) | 10/1/2026 | 17,848,437 | - |
| 72 | 10003722 | ELCE11 Feeder Rebuild | (5) | 6/30/2026 | 6,653,914 | 54,743 |
| 73 | 10005121 | ELCE12 Feeder Rebuild | (5) | 5/1/2025 | 5,909,245 | - |
| 74 | 10005228 | Central Osmose Pole Replacements | (2) | 12/31/2027 | 2,562,580 | - |
| 75 | 10005251 | Mesa del Sol Infrastructure CO1 | (7) | 12/31/2028 | 12,520,693 | - |
| 76 | 10005328 | Palomas Feeders | (5) | 12/31/2029 | 25,536,855 | - |
| 77 | 10005424 | Sol Substation Permanent Power | (5) | 12/31/2033 | - | 1 |
| 78 | 10005726 | Westpointe Substation-DIST | (1) | 12/31/2027 | 19,143,361 | - |
| 79 | 10005821 | ISLE12 Feeder Rebuild | (1) | 12/31/2029 | 8,507,258 | 1,054,448 |
| 80 | 10005922 | Prager 12 Volt Imprvmt and Recdtr | (5) | 5/15/2026 | 484,022 | - |
| 81 | 10030524 | ESC Admin 2nd Floor Remodel | (5) | 3/4/2026 | 1,686,150 | 6,302 |
| 82 | 10030526 | ESC Line Truck Barn Replacement | (3) | 12/31/2026 | 1,212,510 | - |
| 83 | 10030610 | Communication and Equipment Blanket | (3) | Blanket | Blanket | 11,567 |
| 84 | 10031922 | Gen Svcs Bldg Maint Blanket-Distr | (3) | Blanket | Blanket | 342,152 |
| 85 | 10032025 | Furniture for Y Mora office | (5) | 3/31/2026 | 17,775 | - |
| 86 | 10034007 | ABQ Metro 2010 Tools & Equipment | (3) | Blanket | Blanket | 578 |
| 87 | 10034012 | Tech Services Distribution Tools | (3) | Blanket | Blanket | 61 |
| 88 | 10505323 | Grid Mod - AMI (Advcd Mtrg Infrstr) | (2) | 12/31/2030 | 198,425,718 | 11,746,847 |
| 89 | 10505423 | Grid Mod - Distribution Automation | (2) | 12/31/2030 | 89,023,066 | - |
| 90 | 10505623 | Grid Mod - Dist Planning & Engineer | (2)(8) | 12/31/2030 | 9,326,850 | - |
| 91 | 10528023 | Grid Mod - Customer Info and Analyt | (2) | 12/31/2030 | 6,444,306 | - |
| 92 | 10528123 | Grid Mod - Cybersecurity | (2) | 12/31/2029 | 5,470,817 | - |
| 93 | 10528223 | Grid Mod - ADMS | (2) | 12/31/2031 | 39,221,961 | - |
| 94 | 10528323 | Grid Mod - Data Mgmt & Architecture | (2) | 12/31/2029 | 16,907,063 | 860,403 |
| 95 | 10534224 | Grid Mod - Telecommunications | (2) | 12/31/2030 | 40,502,206 | - |
| 96 | 14000107 | Line Extensions - Residential | (4) | Blanket | Blanket | 635,994 |
| 97 | 14000207 | Line Extensions - Commercial | (4) | Blanket | Blanket | 4,017 |

| | A | B | C | D | E | F |
|---|---|---|---|---|---|---|
| 1 | **Public Service Company of New Mexico** | | | | | |
| 2 | **Schedule B-4** | | | | | |
| 3 | **Construction Work In Progress** | | | | | |
| 4 | **Base Period Ending 6/30/2026** | | | | | |
| 5 | **Test Period Ending 9/30/2028** | | | | | |
| 6 | **This schedule is sponsored by PNM Witness Gutierrez** | | | | | |
| 7 | **Project #** | **Project Description** | **Notes** | **Estimated Completion Date** | **Estimated Cost of Project** | **Base Period Beginning Balance Jul-25** |
| 98 | 14000407 | Line Extension - Misc. | (6) | Blanket | Blanket | 1,211 |
| 99 | 14000607 | Distr. Remove & Replace | (2) | Blanket | Blanket | 62,416 |
| 100 | 14000707 | Distr. System Improvements | (2) | Blanket | Blanket | 69,995 |
| 101 | 14001207 | Pole Replacements | (5) | Blanket | Blanket | 0 |
| 102 | 14001307 | Cable Replacement | (5) | Blanket | Blanket | (0) |
| 103 | 14001621 | TIJE12 Feeder Rebuild | (5) | 3/31/2030 | 3,008,206 | 2,136,539 |
| 104 | 15000508 | Lighting T&D | (2) | Blanket | Blanket | 112,926 |
| 105 | 15000608 | Distr. Remove & Replace T&D | (2) | Blanket | Blanket | 1,539,971 |
| 106 | 15001816 | Cliff Sub Rebuild | (5) | 6/30/2026 | 2,799,446 | - |
| 107 | 15002316 | Bird Guard Reliabilty Co34 | (2) | Blanket | Blanket | 51,531 |
| 108 | 15003010 | Substation Equipment Repl. blanket | (5) | Blanket | Blanket | 7 |
| 109 | 15003019 | Lordsburg Substation Improvements | (5) | 12/31/2025 | 2,392,911 | - |
| 110 | 15034011 | Southern Tools & Equipment | (3) | Blanket | Blanket | 35,205 |
| 111 | 15100107 | Line Extensions - Residential | (4) | Blanket | Blanket | 16,796 |
| 112 | 15100207 | Line Extensions - Commercial | (4) | Blanket | Blanket | (93,333) |
| 113 | 15100407 | Line Extensions - Misc. | (6) | Blanket | Blanket | - |
| 114 | 15100507 | Lighting | (4) | Blanket | Blanket | 189,174 |
| 115 | 15100607 | Distr. Remove & Replace | (2) | Blanket | Blanket | 0 |
| 116 | 15100707 | Distr. System Improvements | (2) | Blanket | Blanket | 195,354 |
| 117 | 15100807 | Services | (4) | Blanket | Blanket | 74,631 |
| 118 | 15100907 | Transformers | (4) | Blanket | Blanket | 17,390 |
| 119 | 15101007 | Meter Equipment | (4) | Blanket | Blanket | - |
| 120 | 15101207 | Pole Replacement | (5) | Blanket | Blanket | (0) |
| 121 | 15101807 | Alamorgordo Pure Project | (2) | Blanket | Blanket | 17,872 |
| 122 | 15102019 | Tularosa 13 Ph Load Bal-Voltage Reg | (1) | 12/31/2027 | 486,736 | 122,440 |
| 123 | 15102026 | Alamogordo Land CO1 | (5) | 6/30/2026 | 670,462 | - |
| 124 | 15105222 | Alamogordo Substation Co1 | (1) | 12/31/2029 | 34,045,323 | 1,182,250 |
| 125 | 15200107 | Line Extensions - Residential | (4) | Blanket | Blanket | 72,169 |
| 126 | 15200207 | Line Extensions - Commercial | (4) | Blanket | Blanket | 1,652 |
| 127 | 15200407 | Line Extensions - Misc. | (6) | Blanket | Blanket | - |

| | A | B | C | D | E | F |
|---|---|---|---|---|---|---|
| 1 | **Public Service Company of New Mexico** | | | | | |
| 2 | **Schedule B-4** | | | | | |
| 3 | **Construction Work In Progress** | | | | | |
| 4 | **Base Period Ending 6/30/2026** | | | | | |
| 5 | **Test Period Ending 9/30/2028** | | | | | |
| 6 | **This schedule is sponsored by PNM Witness Gutierrez** | | | | | |
| 7 | **Project #** | **Project Description** | **Notes** | **Estimated Completion Date** | **Estimated Cost of Project** | **Base Period Beginning Balance Jul-25** |
| 128 | 15200507 | Lighting | (4) | Blanket | Blanket | 197,365 |
| 129 | 15200607 | Distr. Remove & Replace | (2) | Blanket | Blanket | (1,333) |
| 130 | 15200707 | Distr. System Improvements | (2) | Blanket | Blanket | 315,334 |
| 131 | 15200807 | Services | (4) | Blanket | Blanket | 113,366 |
| 132 | 15200907 | Transformers | (4) | Blanket | Blanket | 289 |
| 133 | 15201007 | Meter Equipment | (5) | Blanket | Blanket | - |
| 134 | 15201707 | Ruidoso Pure Project | (2) | Blanket | Blanket | 28,397 |
| 135 | 15202025 | Ruidoso Hospital Upgrade | (2) | 8/31/2028 | 1,655,392 | - |
| 136 | 15205224 | South Fork Fire Restoration | (5) | 5/12/2026 | 3,479,133 | 1,549,987 |
| 137 | 15500107 | Line Extensions - Residential | (4) | Blanket | Blanket | 183,299 |
| 138 | 15500207 | Line Extensions - Commercial | (4) | Blanket | Blanket | 13,079 |
| 139 | 15500407 | Line Extensions - Misc. | (6) | Blanket | Blanket | (77) |
| 140 | 15500507 | Lighting | (4) | Blanket | Blanket | 26,198 |
| 141 | 15500607 | Distr. Remove & Replace | (2) | Blanket | Blanket | 6,700 |
| 142 | 15500707 | Distr. System Improvements | (2) | Blanket | Blanket | 50,981 |
| 143 | 15500807 | Services | (4) | Blanket | Blanket | 87,482 |
| 144 | 15500907 | Transformers | (4) | Blanket | Blanket | 8,164 |
| 145 | 15501007 | Meter Equipment | (4) | Blanket | Blanket | - |
| 146 | 15501707 | Silver City Pure Project | (2) | Blanket | Blanket | (12,168) |
| 147 | 15502027 | MD-1 Spare Transformer Replacements | (5) | 12/31/2028 | 3,129,547 | - |
| 148 | 15502321 | Gila National Forest CO1 | (2) | 12/31/2026 | 7,017,773 | 4,468,608 |
| 149 | 15505225 | HFA Pole Rplc SilverCity/Ruidoso | (2) | 12/31/2027 | 6,775,133 | 493,268 |
| 150 | 15530525 | HVAC Silver City Service Centers | (5) | 6/30/2026 | 119,699 | - |
| 151 | 15530621 | Silver City Metal Building | (5) | 3/31/2024 | 969,676 | 62,401 |
| 152 | 15530624 | Standing Seam Metal Roof | (5) | 3/4/2026 | 1,757,744 | - |
| 153 | 20000107 | Line Extensions - Residential | (4) | Blanket | Blanket | 59,739 |
| 154 | 20000207 | Line Extensions - Commercial | (4) | Blanket | Blanket | 41,224 |
| 155 | 20000407 | Line Extension - Misc. | (6) | Blanket | Blanket | - |
| 156 | 20000507 | Lighting | (4) | Blanket | Blanket | 22,423 |
| 157 | 20000607 | Distr. Remove & Replace | (2) | Blanket | Blanket | 74,854 |

| | A | B | C | D | E | F |
|---|---|---|---|---|---|---|
| 1 | **Public Service Company of New Mexico** | | | | | |
| 2 | **Schedule B-4** | | | | | |
| 3 | **Construction Work In Progress** | | | | | |
| 4 | **Base Period Ending 6/30/2026** | | | | | |
| 5 | **Test Period Ending 9/30/2028** | | | | | |
| 6 | **This schedule is sponsored by PNM Witness Gutierrez** | | | | | |
| 7 | **Project #** | **Project Description** | **Notes** | **Estimated Completion Date** | **Estimated Cost of Project** | **Base Period Beginning Balance Jul-25** |
| 158 | 20000707 | Distr. System Improvements | (2) | Blanket | Blanket | 193,131 |
| 159 | 20000807 | Services | (4) | Blanket | Blanket | 30,917 |
| 160 | 20001207 | Pole Replacements | (5) | Blanket | Blanket | 0 |
| 161 | 20001707 | Deming Pure Project | (2) | Blanket | Blanket | 106,865 |
| 162 | 20001722 | Deming & Gold Substations | (5) | 12/31/2034 | 1,357,707 | 888,349 |
| 163 | 20002024 | Deming Streetlight Upgrades | (5) | 6/30/2026 | 273,231 | - |
| 164 | 20003026 | Hondale Transformer Replacement | (5) | 6/30/2028 | - | - |
| 165 | 20030526 | Deming Station Roof Repair | (3) | 12/31/2026 | 204,711 | - |
| 166 | 30000107 | Line Extensions - Residential | (5) | Blanket | Blanket | 13,874 |
| 167 | 30000207 | Line Extensions - Commercial | (4) | Blanket | Blanket | 72,681 |
| 168 | 30000607 | Distr. Remove & Replace | (2) | Blanket | Blanket | 16,689 |
| 169 | 30000705 | Distr. System Imp. | (5) | Blanket | Blanket | 71 |
| 170 | 30000707 | Distr. System Improvements | (2) | Blanket | Blanket | 52,712 |
| 171 | 30000807 | Services | (4) | Blanket | Blanket | 98,542 |
| 172 | 30001623 | Las Vegas Streetlight Upgrades | (5) | 3/4/2026 | 339,848 | - |
| 173 | 30001707 | Las Vegas Pure Project | (5) | Blanket | Blanket | - |
| 174 | 41000107 | Line Extensions - Residential | (4) | Blanket | Blanket | 1,596,616 |
| 175 | 41000207 | Line Extensions - Commercial | (4) | Blanket | Blanket | 975,787 |
| 176 | 41000407 | Line Extensions - Misc. | (6) | Blanket | Blanket | (9,334) |
| 177 | 41000507 | Lighting | (5) | Blanket | Blanket | (3,448) |
| 178 | 41000508 | Lighting T&D | (5) | Blanket | Blanket | - |
| 179 | 41000607 | Distr. Remove & Replace | (2) | Blanket | Blanket | 566,041 |
| 180 | 41000608 | Distr. Remove & Replace T&D | (2) | Blanket | Blanket | 66,231 |
| 181 | 41000707 | Distr. System Improvements | (2) | Blanket | Blanket | 434,285 |
| 182 | 41000807 | Services | (4) | Blanket | Blanket | 568,544 |
| 183 | 41001621 | Distribution Looping in SF-WFF | (5) | 6/30/2026 | 13,737,689 | 0 |
| 184 | 41001622 | Caja Del Rio 13 Backbone Upgrade | (5) | 12/31/2026 | 5,630,193 | 4,536,456 |
| 185 | 41001625 | Los Suenos Trail SF and Backbone | (5) | 6/30/2026 | 2,208,027 | 1,138,604 |
| 186 | 41001707 | Santa Fe Pure Project | (2) | Blanket | Blanket | 31,660 |
| 187 | 41001720 | Santa Fe Streetlight Conversion | (5) | 9/1/2026 | 555,145 | 523,627 |

| | A | B | C | D | E | F |
|---|---|---|---|---|---|---|
| 1 | **Public Service Company of New Mexico** | | | | | |
| 2 | **Schedule B-4** | | | | | |
| 3 | **Construction Work In Progress** | | | | | |
| 4 | **Base Period Ending 6/30/2026** | | | | | |
| 5 | **Test Period Ending 9/30/2028** | | | | | |
| 6 | **This schedule is sponsored by PNM Witness Gutierrez** | | | | | |
| 7 | **Project #** | **Project Description** | **Notes** | **Estimated Completion Date** | **Estimated Cost of Project** | **Base Period Beginning Balance Jul-25** |
| 188 | 41001721 | FOMA13 Feeder Rebuild | (1) | 12/31/2032 | 18,859,408 | 1,274,305 |
| 189 | 41001820 | SF Switchgear Replacements 20-24 | (5) | 12/31/2026 | 311,297 | 141,328 |
| 190 | 41001825 | Cerillos Rd | (2) | 12/31/2027 | 2,587,058 | - |
| 191 | 41001924 | Zafarano Feeder 13 Norm Loading SI | (5) | 12/31/2028 | 263,778 | (1,384) |
| 192 | 41002015 | Caja del Rio 11 to Beckner 12 FT | (1) | 12/31/2032 | 3,594,185 | - |
| 193 | 41002023 | El Dorado 12 Phase 2 Feeder Rebuild | (1) | 12/31/2027 | 7,408,377 | 770,516 |
| 194 | 41002025 | Estrada Maya - CRP1P | (5) | 8/1/2026 | 2,557,587 | 380,714 |
| 195 | 41002124 | Beckner 14 Line Extension | (1) | 11/30/2030 | 3,079,235 | - |
| 196 | 41002215 | Mejia 14 to SantaFeEstates Line Ext | (5) | 10/1/2026 | 166,522 | 131,058 |
| 197 | 41002316 | Bird Guard Reliabilty | (2) | Blanket | Blanket | 1,789 |
| 198 | 41002425 | CamelTracks13 to StatePen12 Feeder | (5) | 12/31/2029 | 5,274,534 | - |
| 199 | 41002516 | Pole Grounds | (2) | Blanket | Blanket | 6,338 |
| 200 | 41002525 | STPE12 HC Solution | (1) | 12/31/2027 | 3,321,193 | - |
| 201 | 41002724 | COLI13 Feeder Rebuild Phase 2 | (1) | 12/31/2026 | 17,441,397 | 10,143,459 |
| 202 | 41002824 | Mejia 115kV Transformer LTC Failure | (1) | 12/31/2026 | 943,100 | 897 |
| 203 | 41003027 | Santa Fe 46kV Pole Replacemnt 2028 | (5) | 12/31/2031 | 5,293,864 | - |
| 204 | 41005221 | COLI13 Feeder Rebuild | (5) | 6/30/2026 | 16,103,946 | 1,462,666 |
| 205 | 41005324 | STPE13 Feeder Rebuild | (1) | 12/31/2027 | 20,534,352 | 6,744,604 |
| 206 | 41005328 | Santa Fe 46kV Pole Replacement 2029 | (5) | 12/31/2031 | 7,453,267 | - |
| 207 | 41005525 | Zia Substation Rebuild CO1 | (1) | 12/31/2028 | 18,900,867 | - |
| 208 | 41030526 | Santa Fe Cooling Tower Replacement | (3) | 6/30/2027 | 386,198 | - |
| 209 | 41030820 | Santa Fe Building Improvements | (5) | 12/31/2026 | 292,748 | - |
| 210 | 41034007 | Tools & Equipment | (3) | Blanket | Blanket | 29,486 |
| 211 | 41037005 | M&J - Comcast connects | (5) | 12/30/2007 | 1,724 | (333) |
| 212 | 50000107 | Line Extensions - Residential | (4) | Blanket | Blanket | 462,454 |
| 213 | 50000207 | Line Extensions - Commercial | (4) | Blanket | Blanket | 81,444 |
| 214 | 50000407 | Line extensions - Misc. | (6) | Blanket | Blanket | 0 |
| 215 | 50000507 | Lighting | (5) | Blanket | Blanket | - |
| 216 | 50000607 | Distr. Remove & Replace | (2) | Blanket | Blanket | 198,084 |
| 217 | 50000707 | Distr. System Improvements | (2) | Blanket | Blanket | 240,980 |

| | A | B | C | D | E | F |
|---|---|---|---|---|---|---|
| 1 | **Public Service Company of New Mexico** | | | | | |
| 2 | **Schedule B-4** | | | | | |
| 3 | **Construction Work In Progress** | | | | | |
| 4 | **Base Period Ending 6/30/2026** | | | | | |
| 5 | **Test Period Ending 9/30/2028** | | | | | |
| 6 | **This schedule is sponsored by PNM Witness Gutierrez** | | | | | |
| 7 | **Project #** | **Project Description** | **Notes** | **Estimated Completion Date** | **Estimated Cost of Project** | **Base Period Beginning Balance Jul-25** |
| 218 | 60000804 | Community Solar Services | (5) | Blanket | Blanket | (4,227,139) |
| 219 | 60001627 | Distribution Telecom 2027-2028 | (1) | 12/31/2028 | 10,195,336 | - |
| 220 | 60001628 | COPR Central OSMOSE 2028-2029 | (5) | 12/31/2029 | 5,238,218 | - |
| 221 | 60001643 | Sandia 115kV Dist | (5) | 10/1/2026 | 44,495 | 5,629 |
| 222 | 60001644 | Cable Replacement Program 2023-2024 | (2) | 12/31/2026 | 10,490,596 | (3,628) |
| 223 | 60001645 | Cable Replacement Program 2024-2025 | (2) | 12/31/2026 | 6,117,315 | 2,601,235 |
| 224 | 60001646 | Cable Replacement Program 2025-2026 | (2) | 12/31/2027 | 14,151,875 | - |
| 225 | 60001647 | Cable Replacement Program 2026-2027 | (2) | 3/31/2028 | 14,627,470 | - |
| 226 | 60001648 | Cable Replacement Program 2027-2028 | (2) | 12/31/2029 | 17,246,260 | - |
| 227 | 60001649 | Cable Replacement Program 2028-2029 | (5) | 12/31/2030 | 17,409,167 | - |
| 228 | 60001715 | Storm Funding Project Co01 | (2) | Blanket | Blanket | (388) |
| 229 | 60001719 | SCADAMATE Switches (OVERHEAD) | (5) | 1/21/2025 | 2,676,778 | 0 |
| 230 | 60001721 | Single Phase URD Replacement-WFF | (5) | 6/30/2026 | 19,260,971 | - |
| 231 | 60001725 | Sub-Transmission Recloser Install | (1) | 12/31/2031 | 9,503,818 | - |
| 232 | 60001726 | Distribution Telecom 2026-2027 | (1) | 12/31/2027 | 10,266,831 | - |
| 233 | 60001727 | Northern OSMOSE Pole Rplcmnts 27-28 | (2) | 12/31/2028 | 9,732,136 | - |
| 234 | 60001728 | NORP Northern OSMOSE 2028-2029 | (5) | 12/31/2029 | 5,764,608 | - |
| 235 | 60001744 | Dist Struc Replace and Upgrade 2023 | (5) | 8/31/2026 | 386,134 | (0) |
| 236 | 60001745 | Dist Struc Replace and Upgrade 2024 | (5) | 12/31/2026 | 1,045,971 | 340,856 |
| 237 | 60001746 | Dist Struc Replace and Upgrade 2025 | (2) | 12/31/2027 | 908,169 | - |
| 238 | 60001747 | Dist Struc Replace and Upgrade 2026 | (2) | 12/31/2028 | 311,637 | - |
| 239 | 60001748 | Dist Struc Replace and Upgrade 2027 | (2) | 12/31/2029 | 4,983,522 | - |
| 240 | 60001749 | Dist Struc Replace and Upgrade 2028 | (5) | 12/31/2030 | 5,145,629 | - |
| 241 | 60001822 | Hawkins Substation | (5) | 12/31/2031 | 2,977,344 | 1,928,440 |
| 242 | 60001826 | State Wide Private Light Conversion | (2) | 12/31/2028 | 4,229,357 | - |
| 243 | 60001828 | SOPR Southern OSMOSE 2028-2029 | (5) | 12/31/2029 | 5,277,938 | - |
| 244 | 60001844 | Switchgear Replace and Upgrade 2023 | (5) | 5/26/2026 | 237,202 | - |
| 245 | 60001845 | Switchgear Replace and Upgrade 2024 | (2) | 12/31/2026 | 1,567,414 | 344,560 |
| 246 | 60001846 | Switchgear Replace and Upgrade 2025 | (2) | 12/31/2027 | 1,182,972 | (189) |
| 247 | 60001847 | Switchgear Replace and Upgrade 2026 | (2) | 12/31/2028 | 576,743 | - |

| | A | B | C | D | E | F |
|---|---|---|---|---|---|---|
| 1 | **Public Service Company of New Mexico** | | | | | |
| 2 | **Schedule B-4** | | | | | |
| 3 | **Construction Work In Progress** | | | | | |
| 4 | **Base Period Ending 6/30/2026** | | | | | |
| 5 | **Test Period Ending 9/30/2028** | | | | | |
| 6 | **This schedule is sponsored by PNM Witness Gutierrez** | | | | | |
| 7 | **Project #** | **Project Description** | **Notes** | **Estimated Completion Date** | **Estimated Cost of Project** | **Base Period Beginning Balance Jul-25** |
| 248 | 60001848 | Switchgear Replace and Upgrade 2027 | (2) | 12/31/2029 | 2,681,536 | - |
| 249 | 60001849 | Switchgear Replace and Upgrade 2028 | (5) | 12/31/2030 | 2,796,757 | - |
| 250 | 60001925 | Rodeo Substation Rebuild CO1 | (1) | 2/28/2027 | 14,063,351 | - |
| 251 | 60001927 | Joint Use Make Ready 2027 | (2) | 12/31/2027 | 3,592,185 | - |
| 252 | 60001928 | Distribution Telecomm 2028-2029 | (5) | 12/31/2029 | 1,756,234 | - |
| 253 | 60001944 | Smart Devi Replace and Upgrade 2023 | (5) | 10/1/2026 | 2,544,040 | 11 |
| 254 | 60001945 | Smart Devi Replace and Upgrade 2024 | (2) | 12/31/2026 | 2,932,666 | 544,684 |
| 255 | 60001946 | Smart Devi Replace and Upgrade 2025 | (2) | 12/31/2027 | 1,698,902 | 9,905 |
| 256 | 60001947 | Smart Devi Replace and Upgrade 2026 | (2) | 12/31/2028 | 613,175 | - |
| 257 | 60001948 | Smart Devi Replace and Upgrade 2027 | (2) | 12/31/2029 | 2,758,284 | - |
| 258 | 60001949 | Smart Devi Replace and Upgrade 2028 | (5) | 12/31/2030 | 2,889,772 | - |
| 259 | 60002010 | Misc Substation Improvements Blanke | (2) | Blanket | Blanket | - |
| 260 | 60002019 | Circuit Switcher Repl/Upgrade Distr | (5) | 10/1/2026 | 1,927,988 | - |
| 261 | 60002023 | Los Luans Capacity Phase IV - Distr | (5) | 12/31/2025 | 938,145 | 955 |
| 262 | 60002044 | PRC-002 Compliance DFR - Dist | (5) | 6/30/2026 | 25,791 | 24,034 |
| 263 | 60002046 | Distr Comm Improvement 2026-2030 | (1) | 12/31/2031 | 738,345 | - |
| 264 | 60002050 | Highway Crossings 2025-2026 | (5) | 12/31/2026 | 11,187 | - |
| 265 | 60002110 | Misc 46kv Line | (2) | Blanket | Blanket | 161,665 |
| 266 | 60002120 | Distribution Relay Replacement | (5) | 12/31/2025 | 3,662,114 | - |
| 267 | 60002144 | Open Wire Secondary Upgrade 2023-20 | (5) | 6/30/2025 | 2,090,798 | 0 |
| 268 | 60002145 | Open Wire Secondary Upgrade 2024-20 | (2) | 12/31/2026 | 1,965,653 | 202,490 |
| 269 | 60002146 | Open Wire Secondary Upgrade 2025-20 | (2) | 12/31/2027 | 1,496,325 | - |
| 270 | 60002147 | Open Wire Secondary Upgrade 2026 | (2) | 12/31/2028 | 1,106,582 | - |
| 271 | 60002148 | Open Wire Secondary Upgrade 2027 | (2) | 12/31/2029 | 1,294,715 | - |
| 272 | 60002149 | Open Wire Secondary Upgrade 2028 | (5) | 12/31/2030 | 1,380,190 | - |
| 273 | 60002206 | Deming SCADA & RCCS Upgrade | (5) | 3/26/2013 | 495,548 | (2,625) |
| 274 | 60002226 | Facility Conflicts 2026 | (2) | 12/31/2032 | 1,339,947 | - |
| 275 | 60002227 | Facility Conflicts 2027 | (2) | 12/31/2032 | 1,162,986 | - |
| 276 | 60002228 | Facility Conflicts 2028 | (5) | 12/31/2032 | 3,972,280 | - |
| 277 | 60002244 | Distribution Looping 2023-2024 | (5) | 6/30/2026 | 4,034,874 | (495) |

| | A | B | C | D | E | F |
|---|---|---|---|---|---|---|
| 1 | **Public Service Company of New Mexico** | | | | | |
| 2 | **Schedule B-4** | | | | | |
| 3 | **Construction Work In Progress** | | | | | |
| 4 | **Base Period Ending 6/30/2026** | | | | | |
| 5 | **Test Period Ending 9/30/2028** | | | | | |
| 6 | **This schedule is sponsored by PNM Witness Gutierrez** | | | | | |
| 7 | **Project #** | **Project Description** | **Notes** | **Estimated Completion Date** | **Estimated Cost of Project** | **Base Period Beginning Balance Jul-25** |
| 278 | 60002245 | Distribution Looping 2024-2025 | (2) | 12/31/2026 | 6,199,278 | 1,406,299 |
| 279 | 60002246 | Distribution Looping 2025-2026 | (2) | 12/31/2027 | 5,694,368 | - |
| 280 | 60002247 | Distribution Looping 2026-2027 | (2) | 12/31/2028 | 2,041,636 | - |
| 281 | 60002248 | Distribution Looping 2027-2028 | (2) | 12/31/2029 | 7,062,769 | - |
| 282 | 60002249 | Distribution Looping 2028-2029 | (5) | 12/31/2030 | 7,005,848 | - |
| 283 | 60002325 | Project Oppidan | (1) | 12/31/2026 | 2,512,360 | 82,188 |
| 284 | 60002327 | Cochiti 12-feeder Improvements Cap | (5) | 12/31/2029 | 6,230,088 | - |
| 285 | 60002328 | Tramway feeders | (1) | 12/31/2027 | 3,050,182 | - |
| 286 | 60002424 | St Cecilia 11 Re-conductor | (1) | 12/31/2028 | 326,833 | - |
| 287 | 60002442 | Not in Service Conductors-WFF | (2) | 12/31/2026 | 4,208,326 | 9,705 |
| 288 | 60002519 | Distribution Comm Improvement 2020 | (5) | 10/1/2026 | 47,097 | 20,815 |
| 289 | 60002521 | Prosperity Substation | (1) | 12/31/2026 | 34,189,871 | 25,991,343 |
| 290 | 60002526 | Project Ranger | (1) | 3/31/2027 | 7,470,469 | - |
| 291 | 60002541 | Wayne Substation | (5) | 3/26/2013 | 3,719,476 | 2,625 |
| 292 | 60002619 | Sagebrush Station-Distribution | (5) | 10/1/2026 | 37,604,399 | 6,963,893 |
| 293 | 60002622 | ELCE12 Feeder Laterals Rebuild | (5) | 12/31/2031 | 9,550,705 | 3,001,788 |
| 294 | 60002626 | Central 15 Feeder | (1) | 4/30/2027 | 2,120,193 | - |
| 295 | 60002714 | Pachmann Substation-Distribution | (5) | 11/30/2025 | 6,567,885 | 1,660 |
| 296 | 60002720 | Distr System Rpl Wire to Insulated | (5) | 10/1/2025 | 2,789,888 | (0) |
| 297 | 60002742 | Switchgear Rpl Vermin Damage-WFF | (5) | 6/6/2024 | 1,071,177 | (0) |
| 298 | 60002743 | Recloser Replacements-WFF | (5) | 5/26/2026 | 590,851 | 15,971 |
| 299 | 60002822 | Tramway Substation | (1) | 12/31/2027 | 9,311,234 | - |
| 300 | 60002824 | Dist Substation Ground Replacements | (2) | 10/1/2026 | 454,494 | 143,834 |
| 301 | 60002920 | Outage Contingency Plan Impr-WFF | (2) | 12/31/2026 | 538,340 | 497,148 |
| 302 | 60003023 | CORNELL 14 - Feeder Backbone Rebuil | (5) | 12/31/2032 | 17,618,583 | - |
| 303 | 60003027 | Subtransm Relay Replacement 2027-28 | (5) | 12/31/2029 | 13,629,190 | - |
| 304 | 60003113 | Morris 12 Feeder Rebuild | (1) | 12/31/2028 | 13,134,718 | - |
| 305 | 60003118 | Distr Cable Testing and Replace 201 | (5) | 3/4/2026 | 3,143,533 | 8,458 |
| 306 | 60003119 | Distr Cable Testing - Replace 2019 | (5) | 10/1/2025 | 5,742,445 | (340) |
| 307 | 60003126 | Project Lola | (1) | 10/1/2026 | 145,557 | - |

| | A | B | C | D | E | F |
|---|---|---|---|---|---|---|
| 1 | **Public Service Company of New Mexico** | | | | | |
| 2 | **Schedule B-4** | | | | | |
| 3 | **Construction Work In Progress** | | | | | |
| 4 | **Base Period Ending 6/30/2026** | | | | | |
| 5 | **Test Period Ending 9/30/2028** | | | | | |
| 6 | **This schedule is sponsored by PNM Witness Gutierrez** | | | | | |
| 7 | **Project #** | **Project Description** | **Notes** | **Estimated Completion Date** | **Estimated Cost of Project** | **Base Period Beginning Balance Jul-25** |
| 308 | 60003421 | Underground Cable-WFF | (5) | 10/1/2026 | 21,647,605 | 0 |
| 309 | 60003520 | Relay Distribution IA | (2) | Blanket | Blanket | - |
| 310 | 60003620 | Van Buren Substation Metering | (5) | 8/31/2026 | 519,774 | 239,085 |
| 311 | 60003621 | Distr Comm Improvement 2021-2025 | (1) | 12/31/2030 | 513,004 | - |
| 312 | 60003625 | Distribution HFA Feeder Relay Rplc | (1) | 12/31/2028 | 3,213,293 | - |
| 313 | 60003825 | Valencia Distribution Feeders | (1) | 5/31/2028 | 7,810,053 | - |
| 314 | 60003924 | Manzanita Dist Feeders and Equip | (5) | 12/31/2025 | 5,644,915 | 2,198 |
| 315 | 60003925 | Sandia Battery Storage 60MW-CO1 | (5) | 12/31/2026 | 288,903 | 83,505 |
| 316 | 60004025 | BLM_US Forest Service ROW - Dist | (5) | 12/31/2030 | 3,189,104 | - |
| 317 | 60004225 | Distribution Pole Replcmt Prog 2025 | (2) | 12/31/2030 | 17,602,203 | - |
| 318 | 60004321 | Claremont Substation | (5) | 1/31/2031 | 17,140,293 | 42,660 |
| 319 | 60004324 | Claremont Substation-Land | (5) | 10/31/2026 | 1,433,174 | 161,330 |
| 320 | 60004325 | Zia 46kV Relay Replacement | (1) | 12/31/2028 | 7,744,256 | - |
| 321 | 60004421 | Girard Substation | (5) | 12/31/2028 | 1,036,924 | 743,652 |
| 322 | 60004425 | WF Enhanced Sit Awareness Co1 | (5) | 10/1/2026 | 864,246 | - |
| 323 | 60004521 | Montano Substation | (5) | 12/31/2035 | 10,081,041 | 238,838 |
| 324 | 60005219 | Manzanita | (5) | 6/30/2026 | 30,809,389 | 288,970 |
| 325 | 60005220 | Palomas Station-Distribution | (1) | 10/31/2029 | 33,596,906 | 5,039,376 |
| 326 | 60005240 | Progress 2 Expansion CO1 | (1) | 12/31/2027 | 5,995,055 | - |
| 327 | 60005321 | Dist Relay Replacement 2021-2024 | (5) | 10/1/2026 | 16,361,202 | 33,863 |
| 328 | 60005322 | Morris Substation | (5) | 12/31/2032 | 2,705,514 | 1,882,387 |
| 329 | 60005324 | Distribution Relay Upgrades | (1) | 12/31/2029 | 20,489,128 | 2,850,841 |
| 330 | 60005327 | Northern Osmose Pole Replacements | (2) | 12/31/2027 | 5,946,877 | - |
| 331 | 60005328 | Snow Vista Unit 2 | (5) | 12/31/2028 | 12,266,386 | - |
| 332 | 60005425 | Wildfire Mitigation 2025-2026 | (2) | 12/31/2027 | 8,985,961 | 612,720 |
| 333 | 60005426 | Wildfire Mitigation 2026-2027 | (2) | 12/31/2028 | 843,776 | - |
| 334 | 60005427 | Wildfire Mitigation 2027-2028 | (2) | 12/31/2029 | 10,946,619 | - |
| 335 | 60005428 | Wildfire Mitigation 2028-2029 | (5) | 12/31/2030 | 10,938,796 | - |
| 336 | 60005522 | 33.6MVA Pwr Xfmr Critical Sp 2024 | (5) | 12/31/2026 | 4,284,115 | 5,398,014 |
| 337 | 60005524 | Wildfire Pole Inspect & Treat - CO1 | (5) | 6/30/2026 | 6,770,421 | - |

| | A | B | C | D | E | F |
|---|---|---|---|---|---|---|
| 1 | **Public Service Company of New Mexico** | | | | | |
| 2 | **Schedule B-4** | | | | | |
| 3 | **Construction Work In Progress** | | | | | |
| 4 | **Base Period Ending 6/30/2026** | | | | | |
| 5 | **Test Period Ending 9/30/2028** | | | | | |
| 6 | **This schedule is sponsored by PNM Witness Gutierrez** | | | | | |
| 7 | **Project #** | **Project Description** | **Notes** | **Estimated Completion Date** | **Estimated Cost of Project** | **Base Period Beginning Balance Jul-25** |
| 338 | 60005527 | Joint Use 2028 | (2) | 12/31/2028 | 11,723,269 | - |
| 339 | 60005528 | Subtransmission Relay Repl 2029-30 | (5) | 12/31/2030 | 18,710,479 | - |
| 340 | 60005622 | 33.6MVA Pwr Xfmr Critical Sp 2025 | (5) | 2/28/2029 | 13,053,766 | 11,159,567 |
| 341 | 60005624 | NM Ops Long Lead Equip Blanket CO1 | (5) | Blanket | Blanket | 12,816,100 |
| 342 | 60005722 | Sky Ranch 1 - Distribution | (5) | 12/31/2025 | 15,333,433 | 739 |
| 343 | 60005726 | Joint Use Make Ready 2026 | (2) | 12/31/2027 | 7,620,477 | - |
| 344 | 60005822 | Menaul Substation | (5) | 12/31/2031 | 1,919,617 | 1,153,288 |
| 345 | 60005910 | Substation Equipment Replacements B | (2) | Blanket | Blanket | 1,356,816 |
| 346 | 60029905 | Accounting True ups | (5) | Blanket | Blanket | (1,533,972) |
| 347 | 60030022 | Spec Equip and Vehicles Co1 | (3) | Blanket | Blanket | - |
| 348 | 60030524 | ESC WPM Critical Backup Facility | (5) | 3/31/2026 | 230,149 | 1,096 |
| 349 | 60030526 | Las Vegas Office ADA Ramp | (3) | 10/1/2026 | 106,653 | - |
| 350 | 60034022 | Fleet Tool Blanket | (3) | Blanket | Blanket | - |
| 351 | 89900107 | Line Extensions - Residential | (4) | Blanket | Blanket | 1,107,063 |
| 352 | 89900141 | LINE EXT RESIDENTIAL 2004 | (5) | Blanket | Blanket | 34 |
| 353 | 89900207 | Line Extensions - Commercial | (4) | Blanket | Blanket | 238,860 |
| 354 | 89900407 | Line extensions - Misc. | (6) | Blanket | Blanket | 19,260 |
| 355 | 89900507 | Lighting | (5) | Blanket | Blanket | 0 |
| 356 | 89900607 | Distr. Remove & Replace | (2) | Blanket | Blanket | 44,866 |
| 357 | 89900707 | Distr. System Improvements | (2) | Blanket | Blanket | 264,340 |
| 358 | 90000207 | Line Extensions - Commercial | (5) | Blanket | Blanket | 3,473 |
| 359 | 90000607 | Distr. Remove & Replace | (2) | Blanket | Blanket | - |
| 360 | 90000707 | Distr. System Improvements | (5) | Blanket | Blanket | - |
| 361 | 90000807 | Services | (5) | Blanket | Blanket | 1,956 |
| 362 | ALA15205 | LA LUZ CROSSROADS SUB | (5) | 4/14/2008 | (5,022) | (3,000) |
| 363 | NME40305 | HOLLYWOOD LINE-DIST SUB WORK | (5) | 12/16/2010 | 736,115 | 24,147 |
| 364 | | **Total Distribution** | | | | **170,625,317** |
| 365 | | | | | | |
| 366 | | **Transmission** | | | | |
| 367 | 09228224 | Transmission FERC Order 2023 Heatma | (5) | 3/4/2026 | 313,036 | - |

| | A | B | C | D | E | F |
|---|---|---|---|---|---|---|
| 1 | **Public Service Company of New Mexico** | | | | | |
| 2 | **Schedule B-4** | | | | | |
| 3 | **Construction Work In Progress** | | | | | |
| 4 | **Base Period Ending 6/30/2026** | | | | | |
| 5 | **Test Period Ending 9/30/2028** | | | | | |
| 6 | **This schedule is sponsored by PNM Witness Gutierrez** | | | | | |
| 7 | **Project #** | **Project Description** | **Notes** | **Estimated Completion Date** | **Estimated Cost of Project** | **Base Period Beginning Balance Jul-25** |
| 368 | 09228225 | Co2 OT Int Sec Network Monitoring | (5) | 10/1/2026 | 6 | 2,582 |
| 369 | 22007021 | Gila National Forest Co02 | (2) | 12/31/2026 | 3,146,516 | 164,553 |
| 370 | 22007110 | Misc. 115kv Trans Imp Blanket | (2) | Blanket | Blanket | - |
| 371 | 22007722 | Alamogordo Substation Co2 | (1) | 12/31/2029 | 31,931,651 | - |
| 372 | 64807018 | UVLS Relay-VT Upg Gavilan-Hollywood | (5) | 6/30/2026 | 573,055 | - |
| 373 | 64807025 | Leyendecker Substation | (5) | 12/31/2025 | 2,527,631 | - |
| 374 | 64807040 | Norton Capacitor | (5) | 6/30/2026 | 1,903,860 | 1,295,033 |
| 375 | 64807126 | State Pen Substation | (5) | 8/31/2029 | 21,940,678 | - |
| 376 | 64807128 | EOL Network Replacements | (5) | 12/31/2030 | 1,922,657 | - |
| 377 | 64807140 | Tribal Fiber-WFF | (5) | 10/1/2026 | 7,167,723 | 112,814 |
| 378 | 64807222 | WW Reactor Breaker Replacement | (1) | 3/31/2027 | 3,402,067 | - |
| 379 | 64807225 | Failed Sta Equip Replcmt Progm 2025 | (1) | 12/31/2027 | 2,663,643 | 684,864 |
| 380 | 64807226 | Rodeo Substation Rebuild CO2 | (1) | 1/31/2027 | 5,156,678 | - |
| 381 | 64807228 | Telecom Flashwave Replace Block 4 | (5) | 12/31/2031 | 923,517 | - |
| 382 | 64807319 | North Sub Water Diversion Rtng Wall | (5) | 9/1/2026 | 409,561 | - |
| 383 | 64807321 | System Equipment Upgrade-WFF | (2) | 12/31/2026 | 157,167 | 244,211 |
| 384 | 64807322 | WFF-Reconfig Tap Sub Unit 2 | (5) | 10/1/2026 | 6,264,632 | 1,776,383 |
| 385 | 64807325 | Luna GT 2 GSU Transformer CO2 | (1) | 9/1/2026 | 51,076 | - |
| 386 | 64807327 | Algodones Control Enclosure | (5) | 12/31/2028 | 5,559,782 | - |
| 387 | 64807328 | OCB Breaker Replacement 2029 | (5) | 12/31/2029 | 4,816,693 | - |
| 388 | 64807420 | Guadalupe 44 MVAR Reactor Regasket | (5) | 6/30/2026 | 496,061 | - |
| 389 | 64807425 | Transmission Pole Replcmt Prog 2025 | (1) | 12/31/2030 | 612,226 | - |
| 390 | 64807525 | WF Enhanced Sit Awareness Co2 | (5) | 3/31/2026 | 128,946 | - |
| 391 | 64807527 | Claremont Building Demolition | (1) | 12/31/2027 | 1,919,319 | - |
| 392 | 64807528 | West Mesa AJ Reactor Replacement | (5) | 7/31/2031 | 11,243,568 | - |
| 393 | 64807542 | SEL Relay Project Block 1 | (5) | 2/16/2026 | 8,061,471 | 11,689 |
| 394 | 64807625 | FERC-881 AAR | (1) | 12/31/2027 | 973,362 | - |
| 395 | 64807626 | YTH Failed Breaker Replacement | (1) | 12/31/2027 | 4,373,544 | - |
| 396 | 64807642 | Guadalupe SVC Backup Generator | (1) | 6/30/2027 | 1,680,189 | 574,448 |
| 397 | 64807919 | Acoma 115kV Tap to BW Line | (5) | 9/1/2026 | 539,238 | - |

| | A | B | C | D | E | F |
|---|---|---|---|---|---|---|
| 1 | **Public Service Company of New Mexico** | | | | | |
| 2 | **Schedule B-4** | | | | | |
| 3 | **Construction Work In Progress** | | | | | |
| 4 | **Base Period Ending 6/30/2026** | | | | | |
| 5 | **Test Period Ending 9/30/2028** | | | | | |
| 6 | **This schedule is sponsored by PNM Witness Gutierrez** | | | | | |
| 7 | **Project #** | **Project Description** | **Notes** | **Estimated Completion Date** | **Estimated Cost of Project** | **Base Period Beginning Balance Jul-25** |
| 398 | 64807920 | Prosperity Transmission Substation | (5) | 10/1/2026 | 39,588,992 | - |
| 399 | 64808026 | Guadalupe Reactor Replacement | (1) | 12/31/2027 | 3,056,688 | - |
| 400 | 64808126 | Ojo Reactor Replacement | (1) | 12/31/2027 | 3,208,882 | - |
| 401 | 64808422 | Embudo Substation | (5) | 12/31/2025 | 7,415,862 | 161 |
| 402 | 64808522 | Tramway Substation | (1) | 12/31/2027 | 2,290,375 | - |
| 403 | 64808723 | Aspen Substation | (5) | 8/31/2029 | 1,239,464 | 920,925 |
| 404 | 64808925 | BLM_US Forest Service ROW - Trans | (5) | 12/31/2030 | 5,139,235 | - |
| 405 | 64809026 | Progress 2 Expansion CO2 | (1) | 12/31/2027 | 9,143,986 | - |
| 406 | 64809027 | Hidden Mountain Expansion Mid-State | (5) | 12/31/2029 | 25,517,625 | - |
| 407 | 64809028 | Transmission HFA Relay Replace 2029 | (5) | 12/31/2031 | 28,394,880 | - |
| 408 | 64809120 | SEL Relay Project 2020 | (5) | 10/1/2026 | 5,969,176 | 0 |
| 409 | 64809126 | Midstate Reactor Procurement | (5) | 6/30/2029 | 17,697,683 | - |
| 410 | 64809222 | Trans Relay Replacement 2022 | (5) | 5/26/2026 | 23,962,285 | 4 |
| 411 | 64809324 | Zia and MD1 Control House Replcmt | (1) | 12/31/2030 | 22,826,134 | - |
| 412 | 64809427 | Plus Power Oso Negro | (5) | 12/31/2028 | 17,221,498 | - |
| 413 | 64809527 | Transmission HFA Relay Replace 2027 | (1) | 12/31/2029 | 25,079,019 | - |
| 414 | 64830023 | Spec Equip and Vehicles Co2 | (3) | Blanket | Blanket | - |
| 415 | 65006010 | San Juan Vail | (5) | 12/31/2030 | 8,867,047 | - |
| 416 | 65006110 | ANPP Transmission blanket | (1) | Blanket | Blanket | 1,072,168 |
| 417 | 65006210 | SW NM Transmission Blanket | (1) | Blanket | Blanket | 1,904,395 |
| 418 | 65007010 | Misc. Station Improvements | (2) | Blanket | Blanket | 98,046 |
| 419 | 65007047 | WM 115kV Trans | (1) | 10/31/2026 | 9,943,177 | 1,267,471 |
| 420 | 65007048 | Storage for Critical Spares - Power | (5) | 8/31/2025 | 790,370 | 10,691 |
| 421 | 65007050 | RTU Program | (1) | 12/31/2030 | 9,889,511 | 752,536 |
| 422 | 65007110 | Misc. Transmission Blanket | (2) | Blanket | Blanket | 510,001 |
| 423 | 65007119 | Asset Health Monitoring_Event Rptg | (5) | 9/1/2026 | 8,676,867 | 202,973 |
| 424 | 65007123 | AW 115kV Structure Replace Phase 1 | (1) | 5/31/2028 | 6,648,208 | - |
| 425 | 65007124 | Prager to Richmond Line Upgrade | (1) | 12/31/2028 | 8,187,159 | - |
| 426 | 65007140 | Long Lead Material-WFF | (5) | 8/6/2024 | - | (0) |
| 427 | 65007143 | Asset Health Mntrg-Event Rptg 24-28 | (5) | 12/31/2028 | 6,864,500 | 903,569 |

| | A | B | C | D | E | F |
|---|---|---|---|---|---|---|
| 1 | **Public Service Company of New Mexico** | | | | | |
| 2 | **Schedule B-4** | | | | | |
| 3 | **Construction Work In Progress** | | | | | |
| 4 | **Base Period Ending 6/30/2026** | | | | | |
| 5 | **Test Period Ending 9/30/2028** | | | | | |
| 6 | **This schedule is sponsored by PNM Witness Gutierrez** | | | | | |
| 7 | **Project #** | **Project Description** | **Notes** | **Estimated Completion Date** | **Estimated Cost of Project** | **Base Period Beginning Balance Jul-25** |
| 428 | 65007150 | Star Light Interconection Expansion | (1) | 12/31/2026 | 2,268,369 | - |
| 429 | 65007219 | New Sandia 115 kV Control House | (1) | 10/31/2026 | 9,539,725 | 2,170,242 |
| 430 | 65007223 | TAG Solar and BESS Project | (5) | 6/30/2026 | 7,973,344 | 56,502 |
| 431 | 65007224 | EPE EP Line Relay Upgrade | (5) | 10/31/2026 | 835,157 | 366,742 |
| 432 | 65007226 | Pajarito 345kV Exp-Corazon Intrcnct | (5) | 12/31/2028 | 14,001,434 | - |
| 433 | 65007312 | Reeves-Embudo 115kV Rebuild | (5) | 9/30/2030 | 1,640,400 | 1,058,087 |
| 434 | 65007324 | NTUA Coalmine Metering | (5) | 6/30/2026 | 43,991 | - |
| 435 | 65007326 | Sunbelt San Juan 345kV Interconnect | (1) | 12/31/2028 | 4,493,769 | - |
| 436 | 65007327 | UNM Transmission Line Relocation | (5) | 12/31/2028 | 18,004 | - |
| 437 | 65007424 | Sandia Battery Storage 60MW-CO2 | (5) | 10/1/2026 | 9,326,895 | 1,310,434 |
| 438 | 65007626 | TPL1 Breaker Replacements | (1) | 12/31/2028 | 15,782,683 | - |
| 439 | 65007627 | TPL1 P5 Relay Upgrades | (1) | 12/31/2027 | 958,892 | - |
| 440 | 65007644 | Transm Comm Improvement 2026-2030 | (1) | 12/31/2031 | 5,594,760 | - |
| 441 | 65007710 | Switch Stations Replacements IA | (2) | Blanket | Blanket | 1,130,420 |
| 442 | 65007713 | Trans Sub Ground Repairs Blanket | (2) | Blanket | Blanket | - |
| 443 | 65007718 | System Wide Relay Upgrades | (5) | 6/30/2026 | 8,720,239 | (0) |
| 444 | 65007726 | Ojo ICLSS RAS Relay Additions | (5) | 6/30/2026 | 714,393 | - |
| 445 | 65007825 | Route 66 Interconnection Expansion | (5) | 8/31/2026 | (38,927) | 300 |
| 446 | 65007826 | Windy Lane Interconnection | (5) | 12/31/2026 | (76) | - |
| 447 | 65007914 | Relay IA | (2) | Blanket | Blanket | 99,425 |
| 448 | 65007925 | Quail Ranch Interconnection Exp | (5) | 6/30/2026 | (3,584) | - |
| 449 | 65007926 | Fox Tail Interconnection | (5) | 1/31/2027 | 4 | - |
| 450 | 65008018 | Transmission Communication Improvem | (1) | Blanket | Blanket | 105,424 |
| 451 | 65008021 | Transm Comm Improvement 2021-2025 | (1) | 12/31/2030 | 5,344,316 | 715,591 |
| 452 | 65008026 | Four Mile Mesa Interconnection | (5) | 12/31/2027 | 577 | - |
| 453 | 65008117 | NERC Physical Security-WFF | (5) | 7/31/2025 | 7,934,947 | - |
| 454 | 65008125 | Sky Ranch Interconnection Expansion | (5) | 6/30/2026 | 5,313 | 213 |
| 455 | 65008143 | NERC Physical Security 24-28 | (5) | 12/31/2028 | 1,264,885 | 27 |
| 456 | 65008217 | Line Switch Replacement | (5) | 6/30/2026 | 410,414 | - |
| 457 | 65008220 | Sagebrush Station-Transmission | (5) | 6/30/2026 | 35,503,836 | 46,555 |

| | A | B | C | D | E | F |
|---|---|---|---|---|---|---|
| 1 | **Public Service Company of New Mexico** | | | | | |
| 2 | **Schedule B-4** | | | | | |
| 3 | **Construction Work In Progress** | | | | | |
| 4 | **Base Period Ending 6/30/2026** | | | | | |
| 5 | **Test Period Ending 9/30/2028** | | | | | |
| 6 | **This schedule is sponsored by PNM Witness Gutierrez** | | | | | |
| 7 | **Project #** | **Project Description** | **Notes** | **Estimated Completion Date** | **Estimated Cost of Project** | **Base Period Beginning Balance Jul-25** |
| 458 | 65008225 | Fujitsu Flashware Replacements | (5) | 12/31/2031 | 3,148,245 | - |
| 459 | 65008315 | Storm Funding Project Co02 | (5) | Blanket | Blanket | - |
| 460 | 65008325 | LANL 115kV Interconnection | (1) | 12/31/2027 | 7,235,233 | - |
| 461 | 65008392 | West Mesa Control House Replacement | (5) | 10/1/2026 | 10,613,442 | 669,621 |
| 462 | 65008425 | Storage for Long Lead Equipment | (5) | 10/1/2026 | 989,248 | - |
| 463 | 65008826 | Alamogordo Land CO2 | (5) | 6/30/2026 | 1,005,693 | - |
| 464 | 65008912 | St Cecilia Station Co2 | (5) | 12/31/2025 | 16,479,199 | 1,824,904 |
| 465 | 65008922 | Pajarito-Rio Puerco 345kV ROW | (5) | 12/31/2029 | 654,227 | 654,227 |
| 466 | 65008953 | Guadalupe 72 MVAR Regasket | (5) | 6/30/2026 | 454,405 | - |
| 467 | 65008994 | San Juan Solar | (1) | 10/1/2026 | 26,829,221 | 453,928 |
| 468 | 65008997 | PRC-002 Compliance DFR Project | (5) | 6/30/2026 | - | - |
| 469 | 65009007 | NM Ops Long Lead Equipment Blanket | (5) | Blanket | Blanket | 15,814,877 |
| 470 | 65009014 | Second 345/115 kV Transformer YTH | (5) | 11/1/2018 | 20,397,941 | - |
| 471 | 65009016 | Facebook Phase I-Trans Sys Upgrade | (5) | 5/18/2022 | 0 | 0 |
| 472 | 65009022 | Belen Phase Shifting Transformer | (5) | 9/2/2025 | 8,866,206 | 3 |
| 473 | 65009024 | Belen PST Substation Install | (5) | 6/30/2026 | 21,398,941 | 3,726 |
| 474 | 65009025 | Pajarito to Rio Puerco 345kV Line | (5) | 12/31/2029 | 200,708,760 | - |
| 475 | 65009027 | Pajarito to Prosperity 345kV Line | (5) | 6/30/2030 | 108,495,198 | - |
| 476 | 65009030 | EP Line Termination | (1) | 12/31/2029 | 41,910,817 | - |
| 477 | 65009040 | Rio Puerco-Sandia Longlead Breakers | (5) | 12/31/2029 | 1,437,971 | - |
| 478 | 65009042 | Desert Station - Transmission | (5) | 9/1/2026 | 2,629,218 | 1,031,587 |
| 479 | 65009050 | Zia Substation Rebuild CO2 | (1) | 12/31/2028 | 17,646,430 | - |
| 480 | 65009116 | Huning Ranch Expansion | (5) | 10/1/2026 | 54,803,684 | 72 |
| 481 | 65009124 | Sol Substation Permanent Power Tran | (5) | 4/30/2026 | 4,638 | 61 |
| 482 | 65009126 | Central 115-12kV Substation Rebuild | (1) | 7/31/2027 | 9,745,685 | - |
| 483 | 65009214 | Sandia 345/115kv Spare Transformer | (5) | 6/30/2026 | 5,587,182 | - |
| 484 | 65009223 | Norton-Hernandez 115kV Rebuild | (5) | 6/30/2030 | 1,257,975 | 818,692 |
| 485 | 65009319 | Palomas Station-Transmission | (1) | 12/31/2031 | 17,037,977 | 3,446,792 |
| 486 | 65009321 | Project Sky Ranch 1 | (5) | 6/30/2026 | 60,049,399 | 370 |
| 487 | 65009422 | Los Lunas Capacity Expansion | (5) | 6/30/2026 | 26,349,493 | - |

| | A | B | C | D | E | F |
|---|---|---|---|---|---|---|
| 1 | **Public Service Company of New Mexico** | | | | | |
| 2 | **Schedule B-4** | | | | | |
| 3 | **Construction Work In Progress** | | | | | |
| 4 | **Base Period Ending 6/30/2026** | | | | | |
| 5 | **Test Period Ending 9/30/2028** | | | | | |
| 6 | **This schedule is sponsored by PNM Witness Gutierrez** | | | | | |
| 7 | **Project #** | **Project Description** | **Notes** | **Estimated Completion Date** | **Estimated Cost of Project** | **Base Period Beginning Balance Jul-25** |
| 488 | 65009424 | Valencia Substation Rebuild - Trans | (1) | 2/28/2027 | 11,956,917 | 524,154 |
| 489 | 65009440 | Sun Lasso Interconnection | (1) | 12/31/2027 | 21,465,375 | - |
| 490 | 65009522 | Atrisco Interconnection | (5) | 6/30/2026 | 35,766,051 | 13,264 |
| 491 | 65009527 | Morrow Phase II | (5) | 12/31/2032 | 50,086,002 | - |
| 492 | 65009540 | Bernalillo Interconnection | (1) | 12/31/2027 | 5,843,201 | - |
| 493 | 65009640 | Mesa del Sol Infrastructure CO2 | (7) | 6/30/2029 | 110,848,252 | - |
| 494 | 65009722 | Belen-Sun Ranch 115kV Rebuild | (5) | 12/31/2028 | 1,511,203 | 1,287,188 |
| 495 | 65009725 | Broken equipment replacement fund | (1) | 12/31/2031 | 7,177,612 | - |
| 496 | 65009727 | Pinyon Park | (5) | 4/30/2029 | 78,074,705 | - |
| 497 | 65009740 | Westpointe Substation-TRN | (1) | 12/31/2027 | 28,869,567 | - |
| 498 | 65009823 | Person-Kirtland Switching 115kV Reb | (5) | 3/31/2029 | 1,777,077 | 1,489,684 |
| 499 | 65009925 | Transmission Line Pole Replcmt 2025 | (1) | 12/31/2031 | 14,590,200 | - |
| 500 | 65009926 | Los Lunas Capacity Expansion Phse 5 | (1) | 6/30/2028 | 113,223,190 | 233,859 |
| 501 | 65009950 | Los Lunas Capacity Expansion Phase4 | (1) | 12/31/2026 | 101,646,845 | 87,029,092 |
| 502 | 65028026 | NM Wholesale MV90 Upgrade 2026 | (5) | 7/31/2026 | 146,774 | - |
| 503 | 65028040 | FERC 881 | (3) | 12/31/2026 | 1,999,474 | 1,076,428 |
| 504 | 65028125 | Comm Improvements Software | (5) | 3/31/2026 | 262,397 | - |
| 505 | 65028126 | NERC PRC-027 CORE Software | (3) | 7/31/2028 | 2,210,190 | - |
| 506 | 65029905 | Accounting True ups | (5) | Blanket | Blanket | (1,770,768) |
| 507 | 65030610 | Communications Equipment-blanket | (3) | Blanket | Blanket | 25,694 |
| 508 | 65031922 | Gen Svcs Bldg Maint Blanket-Trans | (3) | Blanket | Blanket | - |
| 509 | 65034010 | Co2 Tools & Equipment | (3) | Blanket | Blanket | - |
| 510 | 65034012 | TECH SERVICE TRANSMISSION TOOLS | (3) | Blanket | Blanket | 54,283 |
| 511 | 67607026 | San Juan Control House Improvements | (1) | 5/31/2027 | 1,020,535 | - |
| 512 | 67607625 | San Juan Stn Switchgear Replacement | (1) | 8/31/2026 | 458,497 | - |
| 513 | 67607626 | San Juan 345kV Live Tank Breakers | (1) | 12/31/2030 | 1,354,817 | - |
| 514 | 67607640 | SJ Lightning and Backup Power 26-01 | (1) | 3/31/2028 | 423,657 | - |
| 515 | 67607641 | SJ Switchyard Capital 26-02 | (1) | 1/31/2027 | 96,429 | - |
| 516 | | **Total Transmission** | | | | **134,251,219** |
| 517 | | | | | | |

| | A | B | C | D | E | F |
|---|---|---|---|---|---|---|
| 1 | **Public Service Company of New Mexico** | | | | | |
| 2 | **Schedule B-4** | | | | | |
| 3 | **Construction Work In Progress** | | | | | |
| 4 | **Base Period Ending 6/30/2026** | | | | | |
| 5 | **Test Period Ending 9/30/2028** | | | | | |
| 6 | **This schedule is sponsored by PNM Witness Gutierrez** | | | | | |
| 7 | **Project #** | **Project Description** | **Notes** | **Estimated Completion Date** | **Estimated Cost of Project** | **Base Period Beginning Balance Jul-25** |
| 518 | | **Afton** | | | | |
| 519 | 70716025 | Afton Heat Exchanger Coil Repl | (5) | 12/31/2029 | 196,452 | 163,361 |
| 520 | 70716030 | Afton Compressor Upgrade Pkg 3 2028 | (5) | 11/30/2028 | 1,826,794 | - |
| 521 | 70716043 | Afton Steam Turbine Major Inspectn | (5) | 6/30/2026 | 2,255,077 | - |
| 522 | 70716325 | Afton High Energy Pipe Repl HRH | (2) | 10/1/2026 | 989,157 | 845,061 |
| 523 | 70716425 | Afton HRSG Lower Penetration Seal | (5) | 3/31/2026 | 200,640 | 166,827 |
| 524 | 70716440 | Afton ST Generator Exciter Rewind | (5) | 6/30/2026 | 783,037 | - |
| 525 | 70716724 | Afton CT Generator/Rotor Fld Rplcmt | (5) | 6/30/2026 | 2,777,425 | - |
| 526 | 70716826 | SCR Catalyst Replacement | (2) | 12/31/2026 | 53,173 | - |
| 527 | 70716926 | Afton LCI Exciter Transformer | (5) | 12/31/2026 | 1,669 | - |
| 528 | 70717126 | Afton 52 Line Breaker Relays Repl | (2) | 12/31/2026 | 1,293,088 | - |
| 529 | 70717424 | Afton Non Outage Plant Capital 2024 | (5) | 9/1/2026 | 139,111 | 124,133 |
| 530 | 70717425 | Afton Non Outage Plant Capital 2025 | (2) | 8/31/2026 | 133,796 | 59,546 |
| 531 | 70717426 | Afton Non Outage Plant Capital 2026 | (2) | 12/31/2026 | 498,256 | - |
| 532 | 70717427 | Afton Non Outage Plant Capital 2027 | (2) | 12/31/2027 | 642,058 | - |
| 533 | 70717428 | Afton Non Outage Plant Capital 2028 | (2) | 12/31/2028 | 671,845 | - |
| 534 | 70717525 | Afton Outage Plant Capital 2025 | (5) | 9/1/2026 | 4,904 | 3,902 |
| 535 | 70717526 | Afton Outage Plant Capital 2026 | (2) | 12/31/2026 | 1,402,854 | - |
| 536 | 70717527 | Afton Outage Plant Capital 2027 | (2) | 12/31/2028 | 1,612,439 | - |
| 537 | 70717528 | Afton Outage Plant Capital 2028 | (2) | 12/31/2028 | 6,608,154 | - |
| 538 | 70717925 | Afton ST Generator Rewedge | (5) | 6/30/2026 | 1,413,406 | 936,080 |
| 539 | 70718026 | AFT Gas Turbine Major | (2) | 12/31/2028 | 18,133,250 | - |
| 540 | 70728025 | Afton Oper Tech Projects 2025 | (5) | 3/31/2026 | 61,201 | - |
| 541 | | **Total Afton** | | | | **2,298,910** |
| 542 | | | | | | |
| 543 | | **Lordsburg** | | | | |
| 544 | 70316025 | Lordsburg Capital Improvements 2025 | (5) | 12/31/2025 | 214,181 | 44,747 |
| 545 | 70316028 | Lordsburg Non Outage Plant Cap 2028 | (2) | 12/31/2028 | 142,637 | - |
| 546 | 70316124 | Lordsburg RO &Evaporation Pond | (2) | 10/1/2026 | 6,137,237 | 3,972,952 |
| 547 | 70316126 | Lordsburg U1 Depot Visit | (2) | 12/31/2027 | 3,794,044 | - |

| | A | B | C | D | E | F |
|---|---|---|---|---|---|---|
| 1 | **Public Service Company of New Mexico** | | | | | |
| 2 | **Schedule B-4** | | | | | |
| 3 | **Construction Work In Progress** | | | | | |
| 4 | **Base Period Ending 6/30/2026** | | | | | |
| 5 | **Test Period Ending 9/30/2028** | | | | | |
| 6 | **This schedule is sponsored by PNM Witness Gutierrez** | | | | | |
| 7 | **Project #** | **Project Description** | **Notes** | **Estimated Completion Date** | **Estimated Cost of Project** | **Base Period Beginning Balance Jul-25** |
| 548 | 70316325 | Lordsburg U2 Depot Visit | (2) | 1/31/2027 | 6,818,351 | - |
| 549 | 70316527 | Lordsburg Cap Planned Outage 2027 | (2) | 12/31/2027 | 171,561 | - |
| 550 | | **Total Lordsburg** | | | | **4,017,699** |
| 551 | | | | | | |
| 552 | | **Reeves** | | | | |
| 553 | 71316027 | Reeves U2 Step Up Transformer 2029 | (5) | 5/31/2029 | 4,306,071 | - |
| 554 | 71316028 | Reeves U1 Step Up Transformer 2030 | (5) | 5/31/2030 | 4,368,468 | - |
| 555 | 71316124 | Reeves U3 Boiler Waterwall Repl | (5) | 6/30/2026 | 7,806,815 | - |
| 556 | 71316127 | Reeves U3 Boiler Economizers 2028 | (2) | 4/30/2028 | 5,504,369 | - |
| 557 | 71316424 | Reeves Non Outage Plant Cap 2024 | (5) | 10/1/2026 | 414,911 | 51,660 |
| 558 | 71316425 | Reeves Non Outage Plant Cap 2025 | (5) | 10/1/2026 | 34,257 | 26,720 |
| 559 | 71316426 | Reeves Non Outage Plant Cap 2026 | (2) | 7/31/2027 | 160,176 | - |
| 560 | 71316427 | Reeves Non Outage Plant Cap 2027 | (2) | 12/31/2027 | 924,154 | - |
| 561 | 71316428 | Reeves Non Outage Plant Cap 2028 | (2) | 12/31/2028 | 1,327,992 | - |
| 562 | 71316525 | Reeves Outage Plant Capital 2025 | (5) | 10/1/2026 | 59,882 | 101,885 |
| 563 | 71316526 | Reeves Outage Plant Capital 2026 | (2) | 12/31/2027 | 570,398 | - |
| 564 | 71316527 | Reeves Outage Plant Capital 2027 | (2) | 12/31/2028 | 1,523,035 | - |
| 565 | 71316528 | Reeves Outage Plant Capital 2028 | (2) | 12/31/2028 | 4,806,762 | - |
| 566 | 71316624 | Reeves U3 Turbine Generator Outage | (2) | 10/1/2026 | 4,442,550 | 2,827,865 |
| 567 | 71316626 | Reeves U2 Auxiliary Transformer | (2) | 6/30/2027 | 1,056,707 | - |
| 568 | 71316813 | Unit 1 Superheater replacement | (5) | 12/31/2016 | 802,952 | (1,077) |
| 569 | 71316925 | Reeves U3 Generator Exciter Contrlr | (2) | 8/31/2026 | 392,982 | 15,917 |
| 570 | | **Total Reeves** | | | | **3,022,971** |
| 571 | | | | | | |
| 572 | | **Four Corners** | | | | |
| 573 | 71519017 | Four Corners Facility Improvements | (2) | Blanket | Blanket | 3,224,168 |
| 574 | 71519117 | Four Corners Facility - Switchyard | (2) | Blanket | Blanket | 179,277 |
| 575 | 71519208 | Four Corners Facility Improvements | (5) | Blanket | Blanket | (744) |
| 576 | 71519209 | Four Corners Facility Improvements | (5) | Blanket | Blanket | (3,048) |
| 577 | 71519210 | Four Corners Facility Improvements | (5) | Blanket | Blanket | 247,479 |

| | A | B | C | D | E | F |
|---|---|---|---|---|---|---|
| 1 | **Public Service Company of New Mexico** | | | | | |
| 2 | **Schedule B-4** | | | | | |
| 3 | **Construction Work In Progress** | | | | | |
| 4 | **Base Period Ending 6/30/2026** | | | | | |
| 5 | **Test Period Ending 9/30/2028** | | | | | |
| 6 | **This schedule is sponsored by PNM Witness Gutierrez** | | | | | |
| 7 | **Project #** | **Project Description** | **Notes** | **Estimated Completion Date** | **Estimated Cost of Project** | **Base Period Beginning Balance Jul-25** |
| 578 | | **Total Four Corners** | | | | **3,647,131** |
| 579 | | | | | | |
| 580 | | **Palo Verde 1&2** | | | | |
| 581 | 72123410 | PV U1 | (2) | Blanket | Blanket | 2,069,868 |
| 582 | 72223410 | PV U2 | (2) | Blanket | Blanket | 2,214,867 |
| 583 | | **Total Palo Verde 1&2** | | | | **4,284,735** |
| 584 | | | | | | |
| 585 | | **Palo Verde 3** | | | | |
| 586 | 72323410 | PV U3 | (2) | Blanket | Blanket | 8,778,915 |
| 587 | | **Total Palo Verde 3** | | | | **8,778,915** |
| 588 | | | | | | |
| 589 | | **Palo Verde Common** | | | | |
| 590 | 72423410 | PV common | (2) | Blanket | Blanket | 12,531,348 |
| 591 | 72523410 | PV water reclamation | (2) | Blanket | Blanket | 875,860 |
| 592 | | **Total Palo Verde Common** | | | | **13,407,208** |
| 593 | | | | | | |
| 594 | | **Luna** | | | | |
| 595 | 74416021 | Luna Capital Improvements 2021 | (5) | 3/31/2023 | 369,555 | 62,827 |
| 596 | 74416024 | Luna GT1 Flexibility Upgrade | (5) | 3/31/2026 | 6,867,769 | - |
| 597 | 74416025 | Luna Capital Improvements 2025 | (5) | 6/30/2026 | 244,375 | 75,474 |
| 598 | 74416026 | Luna Capital Improvements 2024 | (5) | 5/18/2026 | 25,084 | 24,252 |
| 599 | 74416027 | Luna Capital Planned Outage 2027 | (2) | 12/31/2027 | 784,120 | - |
| 600 | 74416028 | Luna Capital Improvements 2028 | (2) | 11/30/2028 | 718,391 | - |
| 601 | 74416126 | Luna Capital Improvements 2026 | (2) | 12/31/2026 | 871,393 | - |
| 602 | 74416127 | Luna Capital Improvement 2027 | (2) | 12/31/2027 | 1,839,886 | - |
| 603 | 74416128 | Luna Capital Planned Outage 2028 | (2) | 12/31/2028 | 283,888 | - |
| 604 | 74416415 | Luna Capital Improvements 2019 | (5) | 8/31/2026 | 902,924 | - |
| 605 | 74417021 | Luna Capital Planned Outage 2021 | (5) | 3/31/2023 | 3,077,014 | (64,075) |
| 606 | 74417024 | Luna Capital Planned Outage 2024 | (5) | 12/31/2025 | 2,369,584 | 77,140 |
| 607 | 74417025 | Luna Capital Planned Outage 2025 | (2) | 6/30/2026 | 1,897,176 | 738,564 |

| | A | B | C | D | E | F |
|---|---|---|---|---|---|---|
| 1 | **Public Service Company of New Mexico** | | | | | |
| 2 | **Schedule B-4** | | | | | |
| 3 | **Construction Work In Progress** | | | | | |
| 4 | **Base Period Ending 6/30/2026** | | | | | |
| 5 | **Test Period Ending 9/30/2028** | | | | | |
| 6 | **This schedule is sponsored by PNM Witness Gutierrez** | | | | | |
| 7 | **Project #** | **Project Description** | **Notes** | **Estimated Completion Date** | **Estimated Cost of Project** | **Base Period Beginning Balance Jul-25** |
| 608 | 74417123 | Luna Capital Planned Outage 2023 | (5) | 6/1/2026 | 1,549,970 | 18,110 |
| 609 | 74417125 | Luna GT 2 GSU Transformer Replaceme | (2) | 9/1/2026 | 801,887 | 728,451 |
| 610 | 74417126 | Luna Capital Planned Outage 2026 | (2) | 12/31/2026 | 1,141,037 | - |
| 611 | 74418029 | Luna GT1 Hot Gas Path Inspection | (5) | 12/31/2029 | 2,300,453 | - |
| 612 | | **Total Luna** | | | | **1,660,742** |
| 613 | | | | | | |
| 614 | | **San Juan** | | | | - |
| 615 | 76116001 | CBI SJ GEN ENGR FORECAST | (5) | 4/18/2008 | - | (0) |
| 616 | 76116011 | CBI SJ GEN ENGR | (5) | 4/18/2008 | (86,845) | 0 |
| 617 | 76616025 | Common Limestone Area Instrument | (5) | 12/31/2016 | 70,621 | (399) |
| 618 | 76616029 | Common Brine Concentrator 4 Pipe Re | (5) | 12/31/2024 | 126,464 | (2,442) |
| 619 | 76616311 | sj com pi data historian | (5) | 8/19/2014 | 457,184 | (82) |
| 620 | 78916224 | SJGS Process Pond Closures | (5) | 10/1/2026 | 320,567 | - |
| 621 | | **Total San Juan** | | | | **(2,923)** |
| 622 | | | | | | |
| 623 | | **La Luz/Peaking Generation Station** | | | | |
| 624 | 75216126 | La Luz SB-310 Compressor Blade Repl | (2) | 12/31/2026 | 547,892 | - |
| 625 | 75216221 | La Luz Spare GSU Transformer | (5) | 10/1/2026 | 2,316,777 | 773,510 |
| 626 | 75216425 | La Luz Non Outage Plant Capitl 2025 | (5) | 3/31/2026 | 80,847 | - |
| 627 | 75216427 | La Luz Non Outage Plant Capitl 2027 | (2) | 12/31/2027 | 747,654 | - |
| 628 | 75216428 | La Luz Non Outage Plant Capitl 2028 | (2) | 12/31/2028 | 183,553 | - |
| 629 | 75216625 | La Luz Mark VI E Turbine Controls | (2) | 12/31/2026 | 1,417,954 | - |
| 630 | 75216627 | La Luz Outage Plant Capital 2027 | (2) | 12/31/2027 | 814,236 | - |
| 631 | 75216725 | La Luz Balance of Plant Controls | (2) | 12/31/2026 | 1,360,331 | - |
| 632 | 75228025 | La Luz Oper Tech Projects 2025 | (5) | 3/31/2026 | 89,328 | - |
| 633 | | **Total La Luz/Peaking Generation Station** | | | | **773,510** |
| 634 | | | | | | |
| 635 | | **Delta/Rio Bravo** | | | | |
| 636 | 04616027 | Rio Bravo Mark VI E Turbine Control | (2) | 12/31/2027 | 2,142,714 | - |
| 637 | 04616127 | Rio Bravo Balance of Plant Controls | (2) | 11/30/2027 | 1,944,953 | - |

| | A | B | C | D | E | F |
|---|---|---|---|---|---|---|
| 1 | **Public Service Company of New Mexico** | | | | | |
| 2 | **Schedule B-4** | | | | | |
| 3 | **Construction Work In Progress** | | | | | |
| 4 | **Base Period Ending 6/30/2026** | | | | | |
| 5 | **Test Period Ending 9/30/2028** | | | | | |
| 6 | **This schedule is sponsored by PNM Witness Gutierrez** | | | | | |
| 7 | **Project #** | **Project Description** | **Notes** | **Estimated Completion Date** | **Estimated Cost of Project** | **Base Period Beginning Balance Jul-25** |
| 638 | 04616227 | Rio Bravo Turbine Major 2029 | (5) | 5/31/2029 | 9,748,965 | - |
| 639 | 04616327 | Rio Bravo Compressor Upgrade Pkg 3 | (5) | 5/31/2029 | 1,856,520 | - |
| 640 | 04616425 | Rio Bravo Non Outage Plant Cap 2025 | (5) | 10/1/2026 | 85,651 | - |
| 641 | 04616427 | Rio Bravo Non Outage Plant Cap 2027 | (2) | 12/31/2027 | 895,427 | - |
| 642 | 04616428 | Rio Bravo Non Outage Plant Cap 2028 | (2) | 12/31/2028 | 726,317 | - |
| 643 | 04616524 | Rio Bravo Outage Plant Capital 2024 | (5) | 6/30/2026 | 208,342 | 29,732 |
| 644 | 04616525 | Rio Bravo Outage Plant Capital 2025 | (5) | 3/31/2026 | 81,658 | - |
| 645 | 04616527 | Rio Bravo Outage Plant Capital 2027 | (2) | 12/31/2029 | 2,339,579 | - |
| 646 | 04616528 | Rio Bravo Outage Plant Capital 2028 | (5) | 12/31/2028 | 516,119 | - |
| 647 | 04616725 | Rio Bravo Emergency Hot Gas Path | (5) | 3/31/2026 | 7,624,120 | - |
| 648 | 04628024 | Rio Bravo Oper Tech Projects 2024 | (5) | 5/18/2026 | 133,247 | - |
| 649 | 04630525 | Rio Bravo Sfty Secrity Faclity 2025 | (5) | 3/31/2026 | 32,663 | - |
| 650 | | **Total Delta/Rio Bravo** | | | | **29,732** |
| 651 | | | | | | |
| 652 | | **Bulk Power Building Allocation** | | | | |
| 653 | 35730525 | WPM Plumbing Improvement | (5) | 8/31/2026 | 258,925 | - |
| 654 | 35730526 | 2026 Aztec Building A Contingency | (3) | 12/31/2031 | 424,343 | - |
| 655 | 35730527 | 2027 Aztec Building A Contingency | (3) | 12/31/2027 | 94,538 | - |
| 656 | 35730528 | 2028 Aztec Building A Contingency | (3) | 12/31/2028 | 728,833 | - |
| 657 | 35730924 | Gen Svcs Bldg Maint Aztec Bldg A | (5) | 8/31/2026 | 132,112 | - |
| 658 | 35730925 | 25-01 Aztec Building A Contingency | (5) | 6/30/2026 | 32,842 | - |
| 659 | 35732012 | Aztec Building renovations | (5) | 2/28/2013 | 611,009 | (716) |
| 660 | 35732026 | Aztec A 2nd Floor Workstations | (3) | 10/31/2026 | 111,092 | - |
| 661 | | **Total Bulk Power Building Allocation** | | | | **(716)** |
| 662 | | | | | | |
| 663 | | **Battery Storage** | | | | |
| 664 | 70518222 | Dist Battery Capacity Expand Phs I | (5) | 9/1/2026 | 26,693,633 | 811,956 |
| 665 | 70518223 | Dist Battery Capacity Expand Phs 2 | (2) | 12/31/2028 | 75,406,845 | - |
| 666 | 70518224 | Sandia Battery Storage 60MW | (2) | 12/31/2026 | 133,218,454 | 26,535,542 |
| 667 | 70518526 | Sunbelt Solar and Storage Facility | (2) | 12/31/2027 | 255,337,383 | - |

| | A | B | C | D | E | F |
|---|---|---|---|---|---|---|
| 1 | **Public Service Company of New Mexico** | | | | | |
| 2 | **Schedule B-4** | | | | | |
| 3 | **Construction Work In Progress** | | | | | |
| 4 | **Base Period Ending 6/30/2026** | | | | | |
| 5 | **Test Period Ending 9/30/2028** | | | | | |
| 6 | **This schedule is sponsored by PNM Witness Gutierrez** | | | | | |
| 7 | **Project #** | **Project Description** | **Notes** | **Estimated Completion Date** | **Estimated Cost of Project** | **Base Period Beginning Balance Jul-25** |
| 668 | 70528028 | Tech Doc Management 2028 | (5) | 12/31/2028 | 843,048 | - |
| 669 | | **Total Battery Storage** | | | | **27,347,499** |
| 670 | | | | | | |
| 671 | | **Production Related** | | | | |
| 672 | 09328022 | ETRM Upgrade or Replace 2023 | (5) | 5/15/2026 | 1,640,715 | 541,511 |
| 673 | 09328026 | ETRM Data Svcs Implement 2026 | (3) | 9/30/2026 | 116,239 | - |
| 674 | 09328122 | Co 3 - CPR Corp Security 2022 | (5) | 5/26/2026 | 7,763 | 7,763 |
| 675 | 70028023 | Enterprise Investmt Optimztn Softwr | (5) | 6/1/2026 | 4,736,950 | - |
| 676 | 70028025 | Enterprise Investment Optimization | (3) | 7/1/2026 | 1,771,990 | 1,488,922 |
| 677 | 70028028 | Port Opt Copperleaf 2028 | (5) | 12/31/2028 | 2,428,757 | - |
| 678 | 70028125 | Wildfire PSPS Decision Making | (5) | 12/31/2029 | 2,016,346 | - |
| 679 | 70028224 | Documentation System Upgrades | (3) | 10/1/2026 | 1,662,057 | 1,052,910 |
| 680 | 70028225 | Port Opt Copperleaf 2025 | (5) | 3/31/2026 | 3,601,262 | - |
| 681 | 70028227 | Data Historian SoftwareLicense 2027 | (3) | 12/31/2027 | 1,983,991 | - |
| 682 | 70028327 | Adv Analytics Process Mgmt SEEQ 27 | (3) | 12/31/2027 | 882,494 | - |
| 683 | 70028524 | Arrows DOE Phase 1 | (5) | 8/31/2027 | 297,622 | 235,098 |
| 684 | 70029905 | Accounting True ups | (5) | Blanket | Blanket | - |
| 685 | 73128224 | Extended Day Ahead Market-EDAM 2025 | (3) | 11/30/2027 | 15,244,655 | - |
| 686 | 73128324 | GHG Cost to Bidding and GenTrader | (5) | 6/1/2026 | 143,910 | 141,521 |
| 687 | | **Total Production Related** | | | | **3,467,723** |
| 688 | | | | | | |
| 689 | | Undistributed Balances-184 Clearing Account | | | | 15,092,581 |
| 690 | | Retirement Work in Progress-108 Account | | | | 36,603,594 |
| 691 | | | | | | |
| 692 | | **Total PNM** | | | | **429,305,846** |
| 693 | | Plant additions not in CWIP: | | | | |
| 694 | | ARO Asset Four Corners (FERC 317) | | | | |
| 695 | | ARO Asset Lordsburg (FERC 347) | | | | |
| 696 | | Less CWIP Clearings to Account 105100: | | | | |
| 697 | | New Sandia 115 kV Control House | | | | |

| | A | B | C | D | E | F |
|---|---|---|---|---|---|---|
| 1 | **Public Service Company of New Mexico** | | | | | |
| 2 | **Schedule B-4** | | | | | |
| 3 | **Construction Work In Progress** | | | | | |
| 4 | **Base Period Ending 6/30/2026** | | | | | |
| 5 | **Test Period Ending 9/30/2028** | | | | | |
| 6 | **This schedule is sponsored by PNM Witness Gutierrez** | | | | | |
| 7 | **Project #** | **Project Description** | **Notes** | **Estimated Completion Date** | **Estimated Cost of Project** | **Base Period Beginning Balance Jul-25** |
| 698 | | West Mesa Control House Replacement | | | | |
| 699 | | Less CWIP Clearings Deferred to a Future Rate Case | | | | |
| 700 | | Mesa Del Sol Infrastructure Projects | | | | |
| 701 | | Grid Mod - Dist Planning & Engineer | | | | |
| 702 | | Less Retirement Work in Progress-108 Account | | | | |
| 703 | | **Schedule B-1 Total Plant in Service - PNM Additions** | | | | |
| 704 | | | | | | |
| 705 | | **Corporate** | | | | |
| 706 | 91128024 | Strategic Finance Replacement | (5) | 6/30/2026 | 1,959,369 | 914,735 |
| 707 | 91128027 | PowerPlan Upg or Replace 2028 | (5) | 3/31/2029 | 2,216,343 | - |
| 708 | 91128028 | MV90 Retail Upg 2028 | (5) | 12/31/2028 | 73,730 | - |
| 709 | 91128125 | PowerPlan Upgrade 2025 | (5) | 3/31/2026 | 3,422,920 | 1,719,525 |
| 710 | 91128325 | Treasury Management System | (3) | 12/31/2026 | 629,902 | - |
| 711 | 91128525 | PowerPlan Licensing Uplift 2025 | (5) | 3/31/2026 | 487,196 | - |
| 712 | 94128026 | NERC CIP Program-2026 | (3) | 12/31/2026 | 47,731 | - |
| 713 | 94128120 | ArcFM Upgrade to Utility Network | (3) | 10/1/2026 | 12,360,842 | 1,279,185 |
| 714 | 94128225 | OT Int. Sec. Network Monitoring | (5) | 10/1/2026 | 862,077 | 802,854 |
| 715 | 94128325 | Fortress ELA 2025 | (5) | 6/30/2026 | 421,047 | 441,787 |
| 716 | 94128328 | NERC CIP GRC ELA 2028 | (3) | 9/30/2028 | 545,129 | - |
| 717 | 94128343 | Transient Cyber Assets Upgrade | (5) | 8/31/2025 | 627,470 | - |
| 718 | 94128425 | NERC GRC Software 2025 | (3) | 12/31/2026 | 561,537 | - |
| 719 | 94128525 | Esri ELA 2025 | (5) | 3/31/2026 | 818,740 | - |
| 720 | 94128528 | Fortra FIM Tripwire ELA 2028 | (3) | 5/31/2028 | 986,337 | - |
| 721 | 94130522 | Santa Fe Office Parking Lot | (5) | 12/31/2024 | 1,107 | 1,140 |
| 722 | 95128124 | OT Display Wall Upg 2024 | (5) | 10/1/2025 | 787,983 | - |
| 723 | 95128127 | ColdFusion Upg 2027 | (3)(8) | 12/31/2027 | 149,425 | - |
| 724 | 95128144 | CPR OT Assets Annual Refresh 2024 | (5) | 3/4/2026 | 415,175 | 2 |
| 725 | 95128145 | CPR OT Assets Annual Refresh 2025 | (5) | 3/31/2026 | 590,808 | 1,932 |
| 726 | 95128146 | CPR OT Assets Annual Refresh 2026 | (3) | 12/31/2026 | 988,447 | - |
| 727 | 95128147 | CPR OT Assets Annual Refresh 2027 | (3)(8) | 12/31/2027 | 993,667 | - |

| | A | B | C | D | E | F |
|---|---|---|---|---|---|---|
| 1 | **Public Service Company of New Mexico** | | | | | |
| 2 | **Schedule B-4** | | | | | |
| 3 | **Construction Work In Progress** | | | | | |
| 4 | **Base Period Ending 6/30/2026** | | | | | |
| 5 | **Test Period Ending 9/30/2028** | | | | | |
| 6 | **This schedule is sponsored by PNM Witness Gutierrez** | | | | | |
| 7 | **Project #** | **Project Description** | **Notes** | **Estimated Completion Date** | **Estimated Cost of Project** | **Base Period Beginning Balance Jul-25** |
| 728 | 95128148 | CPR OT Assets Annual Refresh 2028 | (5) | 12/31/2028 | 999,843 | - |
| 729 | 96828045 | KnowBe4 ELA 2025-2028 | (5) | 10/31/2025 | 132,606 | - |
| 730 | 96828046 | ZenGRC ELA 2026 | (3) | 7/1/2026 | 224,016 | - |
| 731 | 96828047 | IBM DataStage ETL Upg 2027 | (3) | 12/31/2027 | 202,213 | - |
| 732 | 96828055 | Dataminr Phys Sec ELA 2025 | (5) | 3/31/2026 | 304,229 | - |
| 733 | 96828057 | 3rd Party Risk Mgmt Ph 1 2027 | (3) | 12/31/2027 | 474,375 | - |
| 734 | 96828058 | Arctic Wolf ELA 2028 | (5) | 11/30/2028 | 1,998,154 | - |
| 735 | 96828066 | CrowdStrike ELA 2026 | (3) | 9/30/2026 | 1,594,466 | - |
| 736 | 96828067 | Segmentation Network and ACI 2027 | (3) | 12/31/2027 | 199,921 | - |
| 737 | 96828068 | Privileged Access Mgmt ELA 2028 | (5) | 10/31/2028 | 593,483 | - |
| 738 | 96828086 | Network Access Control (NAC) 2026 | (3) | 8/31/2026 | 84,232 | - |
| 739 | 96828123 | MS Enterprise License Agrmt 2023 | (5) | 9/30/2025 | 7,291,292 | - |
| 740 | 96828145 | Corporate Applications Prog 2025 | (3) | 7/31/2026 | 893,881 | 279,322 |
| 741 | 96828155 | Tripwire ELA 2025 | (5) | 3/31/2026 | 966,981 | - |
| 742 | 96828157 | AI Detect and Correl Ph 1 2027 | (3) | 12/31/2027 | 457,231 | - |
| 743 | 96828165 | VMWare Virtual Desk & App ELA 2025 | (5) | 5/26/2026 | 992,073 | - |
| 744 | 96828167 | Segmentation NSX 2027 | (3) | 12/31/2027 | 500,095 | - |
| 745 | 96828185 | Web Application Modernization 2025 | (5) | 6/30/2026 | 252,344 | 28,692 |
| 746 | 96828224 | MS SharePoint Upgrade 2025 | (5) | 7/31/2026 | 378,608 | - |
| 747 | 96828226 | MS Enterprise License Agrmt 2026 | (5) | 7/1/2026 | 9,268,491 | - |
| 748 | 96828228 | CISCO SmartNet (HW) ELA 2028 | (3) | 8/31/2028 | 2,367,874 | - |
| 749 | 96828247 | Disaster Recovery Refresh (HW) 2027 | (3) | 12/31/2027 | 1,989,166 | - |
| 750 | 96828255 | Blackbaud ELA 2025 | (5) | 6/30/2026 | 97,046 | - |
| 751 | 96828256 | Tenable ELA 2026 | (5) | 3/31/2026 | 421,611 | - |
| 752 | 96828257 | Agentic AI SOC 2027 | (3) | 12/31/2027 | 299,279 | - |
| 753 | 96828263 | Disaster Recover Refr (HW) | (5) | 3/27/2026 | 1,028,106 | 32,932 |
| 754 | 96828267 | VMware vRealize ELA 2027 | (3) | 12/31/2027 | 1,980,218 | - |
| 755 | 96828285 | CyberArk PAM Upgrade | (5) | 3/4/2026 | 593,815 | - |
| 756 | 96828286 | Security Mitigation Program 2026 | (3) | 12/31/2026 | 2,840,076 | - |
| 757 | 96828346 | Corporate Applications Prog 2026 | (3) | 12/31/2026 | 822,111 | - |

| | A | B | C | D | E | F |
|---|---|---|---|---|---|---|
| 1 | **Public Service Company of New Mexico** | | | | | |
| 2 | **Schedule B-4** | | | | | |
| 3 | **Construction Work In Progress** | | | | | |
| 4 | **Base Period Ending 6/30/2026** | | | | | |
| 5 | **Test Period Ending 9/30/2028** | | | | | |
| 6 | **This schedule is sponsored by PNM Witness Gutierrez** | | | | | |
| 7 | **Project #** | **Project Description** | **Notes** | **Estimated Completion Date** | **Estimated Cost of Project** | **Base Period Beginning Balance Jul-25** |
| 758 | 96828347 | Corporate Applications Prog 2027 | (3) | 12/31/2027 | 199,298 | - |
| 759 | 96828357 | CUCM Upgrade 2027 | (3) | 12/31/2027 | 308,120 | - |
| 760 | 96828367 | Service Suite Upg 2027 | (3) | 12/31/2027 | 999,738 | - |
| 761 | 96828385 | Oracle ELA and Azure Cloud 2025 | (5) | 3/31/2026 | 11,486,692 | - |
| 762 | 96828386 | AI Program 2026 | (3) | 12/31/2026 | 2,976,732 | - |
| 763 | 96828387 | AI Program 2027 | (3) | 12/31/2027 | 2,974,150 | - |
| 764 | 96828388 | AI Program 2028 | (5) | 12/31/2028 | 3,024,790 | - |
| 765 | 96828425 | CPR Servers Storage 2025 | (3) | 6/30/2026 | 2,191,094 | 1,177,488 |
| 766 | 96828426 | CPR Servers Storage 2026 | (3) | 12/31/2026 | 1,247,756 | - |
| 767 | 96828427 | CPR Servers Storage 2027 | (3) | 12/31/2027 | 1,613,723 | - |
| 768 | 96828428 | CPR Servers Storage 2028 | (5) | 12/31/2028 | 1,250,087 | - |
| 769 | 96828452 | Dense Wavelength Div Multi (DWDM) | (5) | 10/1/2025 | 2,014,543 | - |
| 770 | 96828457 | DC OS Lifecycle Mgmt 2027 | (3) | 12/31/2027 | 75,058 | - |
| 771 | 96828485 | Gigamon ELA 2025 - 2028 | (5) | 5/26/2026 | 222,264 | - |
| 772 | 96828486 | Oracle Java License True Up 2026 | (5) | 6/30/2026 | 724,193 | - |
| 773 | 96828524 | CPR PCs 2024 | (5) | 10/1/2025 | 997,264 | - |
| 774 | 96828525 | CPR PCs 2025 | (5) | 7/1/2026 | 2,164,023 | 742,365 |
| 775 | 96828526 | CPR PCs 2026 | (3) | 12/31/2026 | 1,509,321 | - |
| 776 | 96828527 | CPR PCs 2027 | (3) | 12/31/2027 | 1,499,771 | - |
| 777 | 96828528 | CPR PCs 2028 | (5) | 12/31/2028 | 1,500,135 | - |
| 778 | 96828548 | Dark Trace ELA 2028 | (3) | 5/31/2028 | 817,342 | - |
| 779 | 96828567 | Shadow IT Alerting and ID Ph 1 2027 | (3) | 12/31/2027 | 380,090 | - |
| 780 | 96828585 | Netwrix ELA 2026 | (5) | 6/30/2026 | 184,175 | - |
| 781 | 96828645 | CPR Cybersecurity 2025 | (5) | 6/30/2026 | 537,267 | 2,539 |
| 782 | 96828646 | CPR Cybersecurity 2026 | (3) | 12/31/2026 | 800,320 | - |
| 783 | 96828647 | CPR Cybersecurity 2027 | (3) | 12/31/2027 | 1,545,434 | - |
| 784 | 96828648 | CPR Cybersecurity 2028 | (5) | 12/31/2028 | 1,000,639 | - |
| 785 | 96828657 | DC Storage Backup Modern 2027 | (3) | 12/31/2027 | 150,192 | - |
| 786 | 96828666 | Dataminr Cyber ELA 2026 | (3) | 12/31/2026 | 251,520 | - |
| 787 | 96828667 | System Process App Seg Ph 1 2027 | (3) | 12/31/2027 | 450,078 | - |

| | A | B | C | D | E | F |
|---|---|---|---|---|---|---|
| 1 | **Public Service Company of New Mexico** | | | | | |
| 2 | **Schedule B-4** | | | | | |
| 3 | **Construction Work In Progress** | | | | | |
| 4 | **Base Period Ending 6/30/2026** | | | | | |
| 5 | **Test Period Ending 9/30/2028** | | | | | |
| 6 | **This schedule is sponsored by PNM Witness Gutierrez** | | | | | |
| 7 | **Project #** | **Project Description** | **Notes** | **Estimated Completion Date** | **Estimated Cost of Project** | **Base Period Beginning Balance Jul-25** |
| 788 | 96828686 | ALM Upg and ELA 2026 | (5) | 6/30/2026 | 1,081,482 | - |
| 789 | 96828725 | Cybersecurity Program 2025 | (5) | 6/30/2026 | 377,053 | 14,985 |
| 790 | 96828748 | Adobe Licensing Agreement 2028 | (3) | 3/31/2028 | 792,489 | - |
| 791 | 96828757 | Email Resil Modern Sec Ph 1 2027 | (3) | 12/31/2027 | 239,032 | - |
| 792 | 96828764 | Gartner Support Contracts 2025 | (5) | 8/1/2026 | 417,120 | 393,725 |
| 793 | 96828765 | Automation Anywhere ELA 2025 | (5) | 3/31/2026 | 550,722 | - |
| 794 | 96828767 | TDM Decommissioning 2027 | (3) | 12/31/2027 | 500,314 | - |
| 795 | 96828786 | Gigamon Co-Termed ELA 2026 | (3) | 7/31/2026 | 570,943 | - |
| 796 | 96828825 | Infrast-New Capabilities Prgrm 2025 | (5) | 3/31/2026 | 345,588 | 269,782 |
| 797 | 96828846 | Infrast-New Capabilities Prgrm 2026 | (3) | 12/31/2026 | 233,429 | - |
| 798 | 96828857 | Endpoint Hardening Ph 1 2027 | (3) | 12/31/2027 | 345,280 | - |
| 799 | 96828867 | Texas Internet Egress via BGP 2027 | (3) | 12/31/2027 | 149,801 | - |
| 800 | 96828868 | PNM Foundation Blackbaud ELA 2028 | (5) | 11/30/2028 | 116,600 | - |
| 801 | 96828926 | Lifecycle Mgmt-Infra Prgrm 2026 | (3) | 12/31/2026 | 1,999,920 | - |
| 802 | 96828927 | Lifecycle Mgmt-Infra Prgrm 2027 | (3) | 12/31/2027 | 218,825 | - |
| 803 | 96828945 | Telecom-New Capabilities Prgrm 2025 | (5) | 6/30/2026 | 211,402 | 31,674 |
| 804 | 96828946 | Tech Adv-Future Cap Program 2026 | (3) | 12/31/2026 | 493,719 | - |
| 805 | 96828947 | Tech Adv-Future Cap Program 2027 | (3) | 12/31/2027 | 1,288,769 | - |
| 806 | 96828957 | Enhance Auth Modern Ph 1 2027 | (3) | 12/31/2027 | 448,976 | - |
| 807 | 96828965 | Tibco Platform Upg 2025 | (3) | 12/31/2026 | 1,503,591 | - |
| 808 | 96828966 | Blue Snow ELA 2026 | (3) | 7/31/2026 | 77,232 | - |
| 809 | 96828967 | VMware Cloud Found Dev 2027 | (3) | 12/31/2027 | 250,294 | - |
| 810 | 96829026 | Telecom-New Capabilities Prgrm 2026 | (3) | 12/31/2026 | 1,407,599 | - |
| 811 | 96829048 | CyberArk PAM Upgrade 2028 | (5) | 10/31/2028 | 792,496 | - |
| 812 | 96829057 | Gartner Support Contracts 2027 | (3) | 11/30/2027 | 383,313 | - |
| 813 | 96829065 | NH360 Portfolio Insights ELA | (5) | 6/30/2026 | 491,003 | - |
| 814 | 96829066 | SigmaFlow Upg 2026 | (3) | 12/31/2026 | 260,823 | - |
| 815 | 96829067 | Threat Exp Mgmt Mod Ph 1 2027 | (3) | 12/31/2027 | 350,198 | - |
| 816 | 96829068 | Optiv Saviynt True Up 2028 | (3) | 6/30/2028 | 28,722 | - |
| 817 | 96829127 | Cisco Security ELA 2027 | (3) | 8/30/2027 | 7,800,987 | - |

| | A | B | C | D | E | F |
|---|---|---|---|---|---|---|
| 1 | **Public Service Company of New Mexico** | | | | | |
| 2 | **Schedule B-4** | | | | | |
| 3 | **Construction Work In Progress** | | | | | |
| 4 | **Base Period Ending 6/30/2026** | | | | | |
| 5 | **Test Period Ending 9/30/2028** | | | | | |
| 6 | **This schedule is sponsored by PNM Witness Gutierrez** | | | | | |
| 7 | **Project #** | **Project Description** | **Notes** | **Estimated Completion Date** | **Estimated Cost of Project** | **Base Period Beginning Balance Jul-25** |
| 818 | 96829146 | Ent Firewall Renewal 2026 | (3) | 10/31/2026 | 795,741 | - |
| 819 | 96829157 | Lewisville Network Refresh 2027 | (3) | 12/31/2027 | 350,742 | - |
| 820 | 96829165 | AI Program 2025 | (5) | 6/30/2026 | 3,385,142 | 89,831 |
| 821 | 96829228 | NetApp Banner Storage ELA 2028 | (3) | 5/31/2028 | 273,599 | - |
| 822 | 96829247 | Broadcom ELA 2027 | (3) | 3/31/2027 | 10,000,000 | - |
| 823 | 96829256 | Denodo BI ELA 2026 | (5) | 3/31/2026 | 453,378 | - |
| 824 | 96829257 | Lewisville Load Balancer F5 2027 | (3) | 12/31/2027 | 224,546 | - |
| 825 | 96829265 | VMware vCenter, vSphere ELA 2025 | (5) | 6/30/2026 | 2,968,416 | - |
| 826 | 96829266 | Web App Mod Prog 2026 | (3) | 12/31/2026 | 159,936 | - |
| 827 | 96829348 | Pathlock ELA 2028 | (3) | 9/30/2028 | 152,108 | - |
| 828 | 96829357 | Lewisville Sec Stack Modern 2027 | (3) | 12/31/2027 | 300,095 | - |
| 829 | 96829358 | Fortress ELA 2028 | (3) | 7/31/2028 | 439,824 | - |
| 830 | 96829367 | CPR Crisis Resilience 2027 | (3) | 12/31/2027 | 150,226 | - |
| 831 | 96829427 | Splunk IT Core Enterprise ELA 2027 | (3) | 3/31/2027 | 4,968,674 | - |
| 832 | 96829444 | CISCO Ent Lic Agreement 2024 | (5) | 4/8/2025 | 7,204,396 | - |
| 833 | 96829446 | CPR Corp Security 2026 | (3) | 12/31/2026 | 797,737 | - |
| 834 | 96829447 | CPR Corp Security 2027 | (3) | 12/31/2027 | 749,579 | - |
| 835 | 96829448 | CPR Corp Security 2028 | (5) | 12/31/2028 | 800,171 | - |
| 836 | 96829457 | Network Perim File Threat 2027 | (3) | 12/31/2027 | 1,202,494 | - |
| 837 | 96829527 | eDOCS DM Tech Stack Upgrade 2027 | (3) | 12/31/2027 | 1,302,177 | - |
| 838 | 96829528 | SETA KnowBe4 ELA 2028 | (5) | 10/31/2028 | 148,833 | - |
| 839 | 96829557 | Network Sec Infra Auto 2027 | (3) | 12/31/2027 | 100,443 | - |
| 840 | 96829558 | Gartner Support Contracts 2028 | (5) | 11/30/2028 | 399,116 | - |
| 841 | 96829565 | ITSM 2025 SAM Pro and Integrations | (5) | 6/30/2026 | 2,402,130 | 1,870,805 |
| 842 | 96829625 | CPR Telecom Blanket 2025 | (5) | 6/30/2026 | 1,257,747 | 140,872 |
| 843 | 96829627 | Tanium ELA 2027 | (3) | 5/31/2027 | 498,702 | - |
| 844 | 96829628 | Oracle ELA 2028 | (3) | 8/31/2028 | 9,920,826 | - |
| 845 | 96829646 | CPR Telecom Blanket 2026 | (3) | 12/31/2026 | 953,067 | - |
| 846 | 96829647 | CPR Telecom Blanket 2027 | (3) | 12/31/2027 | 1,250,031 | - |
| 847 | 96829648 | CPR Telecom Blanket 2028 | (5) | 12/31/2028 | 999,997 | - |

| | A | B | C | D | E | F |
|---|---|---|---|---|---|---|
| 1 | **Public Service Company of New Mexico** | | | | | |
| 2 | **Schedule B-4** | | | | | |
| 3 | **Construction Work In Progress** | | | | | |
| 4 | **Base Period Ending 6/30/2026** | | | | | |
| 5 | **Test Period Ending 9/30/2028** | | | | | |
| 6 | **This schedule is sponsored by PNM Witness Gutierrez** | | | | | |
| 7 | **Project #** | **Project Description** | **Notes** | **Estimated Completion Date** | **Estimated Cost of Project** | **Base Period Beginning Balance Jul-25** |
| 848 | 96829665 | Enterprise Backup Replacement 2025 | (5) | 7/31/2026 | 1,855,262 | 1,740,737 |
| 849 | 96829666 | Microsoft CSP ELA and Azure 2026 | (3) | 12/31/2026 | 1,507,644 | - |
| 850 | 96829728 | ServiceNow ELA 2028 | (3) | 6/20/2028 | 5,640,099 | - |
| 851 | 96829757 | Traka ELA 2027 | (3) | 5/31/2027 | 69,223 | - |
| 852 | 96829765 | Adobe Licensing Agreement 2025 | (5) | 6/30/2026 | 663,130 | - |
| 853 | 96829766 | Enterprise Data Storage Refr 2026 | (3) | 12/31/2026 | 1,692,143 | - |
| 854 | 96829825 | RedHat ELA 2025 | (5) | 3/4/2026 | 1,191,669 | 1,185,917 |
| 855 | 96829827 | Infoblox ELA 2027 | (3) | 10/31/2027 | 346,972 | - |
| 856 | 96829845 | DFIN Collaboration ELA 2026 | (3) | 12/31/2026 | 1,991,258 | - |
| 857 | 96829857 | Privil Sys Session Mgmt Ph 1 2027 | (3) | 12/31/2027 | 380,090 | - |
| 858 | 96829865 | Windows 11 2025 | (5) | 3/31/2026 | 534,161 | 235,108 |
| 859 | 96829866 | Cognos Upgrade 2026 | (5) | 12/31/2026 | 179,986 | - |
| 860 | 96829926 | Security Video System 2026 | (3) | 12/31/2026 | 300,457 | - |
| 861 | 96829928 | Mythos-Ready AI Cyber Def Prog 2028 | (5) | 12/31/2028 | 10,000,000 | - |
| 862 | 96829945 | CPR Corp Security 2025 | (5) | 6/30/2026 | 249,401 | 72,902 |
| 863 | 96829957 | RSM Qualys Portal PCI Scans 2027 | (3) | 12/31/2027 | 69,736 | - |
| 864 | 96829966 | Identity Access Mgmt (IAM) 2026 | (3) | 12/31/2026 | 2,844,931 | - |
| 865 | 96830525 | Aztec Data Center Chillers | (5) | 4/30/2026 | 1,226,261 | - |
| 866 | 96830526 | Data Center Cooling Towers Repl | (3) | 12/31/2026 | 499,699 | - |
| 867 | 96830625 | Aztec DC Office Improvements 2025 | (5) | 9/1/2025 | 90,060 | 7,800 |
| 868 | 96830626 | Data Center BTS Help Desk Cubicles | (5) | 6/30/2026 | 184,286 | - |
| 869 | 96830725 | Data Center UPS Battery Backups | (5) | 8/1/2026 | 1,852,645 | - |
| 870 | 96830726 | Data Center NOC Split Systems | (5) | 5/31/2026 | 96,996 | - |
| 871 | 96830826 | Data Center Shed and Paving | (5) | 6/30/2026 | 151,896 | - |
| 872 | 96831007 | Gen Svcs Maint Blankt - Data Center | (3) | Blanket | Blanket | - |
| 873 | 96834025 | Data Center UPS Battery Backups | (5) | 8/31/2026 | - | - |
| 874 | 96834157 | DC Server HW Ref 2027 | (3) | 10/31/2027 | 200,080 | - |
| 875 | 96834158 | DC Server HW Ref 2028 | (5) | 10/31/2028 | 799,901 | - |
| 876 | 97130526 | TXNM Farmington Office | (3) | 12/31/2026 | 2,665,295 | - |
| 877 | 97131007 | Gen Svcs Maint Blanket - Farmington | (3) | Blanket | Blanket | - |

| | A | B | C | D | E | F |
|---|---|---|---|---|---|---|
| 1 | **Public Service Company of New Mexico** | | | | | |
| 2 | **Schedule B-4** | | | | | |
| 3 | **Construction Work In Progress** | | | | | |
| 4 | **Base Period Ending 6/30/2026** | | | | | |
| 5 | **Test Period Ending 9/30/2028** | | | | | |
| 6 | **This schedule is sponsored by PNM Witness Gutierrez** | | | | | |
| 7 | **Project #** | **Project Description** | **Notes** | **Estimated Completion Date** | **Estimated Cost of Project** | **Base Period Beginning Balance Jul-25** |
| 878 | 97230625 | Masthead TPO Roof | (5) | 5/26/2026 | 1,109,918 | - |
| 879 | 97230725 | Masthead HVAC RTU Replacement | (3) | 8/1/2026 | 1,264,080 | - |
| 880 | 97231007 | Gen Svcs Maint Blanket- Masthead | (3) | Blanket | Blanket | - |
| 881 | 97231026 | Masthead 2nd Floor Conference Room | (5) | 6/30/2026 | 49,433 | - |
| 882 | 97728024 | Phy Sec-New Capabilities Prgrm 2024 | (5) | 3/4/2026 | 451,597 | - |
| 883 | 97728025 | Phys Sec New Cap Prog 2025 | (5) | 3/31/2026 | 144,747 | - |
| 884 | 97728026 | Phys Sec New Cap Prog 2026 | (3) | 12/31/2026 | 230,168 | - |
| 885 | 97728027 | Phys Sec New Cap Prog 2027 | (3)(8) | 12/31/2027 | 799,255 | - |
| 886 | 97728126 | Genetec ELA 2026 | (5) | 10/1/2026 | 205,880 | - |
| 887 | 97728128 | C Cure ELA 2027 | (3)(8) | 12/31/2027 | 119,691 | - |
| 888 | 97728225 | Business Cont SNOW 2025 | (5) | 3/31/2026 | 275,376 | - |
| 889 | 97728228 | EVMS Upg or Replace 2028 | (5) | 12/31/2028 | 378,108 | - |
| 890 | 97730018 | Building Maintenance Truck Replace | (5) | 6/30/2024 | 97,716 | 16 |
| 891 | 97730024 | 2024 - Gen Svcs Bldg Maint Vehicle | (5) | 5/26/2026 | 66,561 | 74 |
| 892 | 97730125 | 2025 Gen Svcs Bldg Maint Vehicle 2 | (5) | 5/26/2026 | 31,398 | - |
| 893 | 97730524 | General Bldg and MRF Upgrades | (3)(8) | 12/31/2027 | 6,992,010 | - |
| 894 | 97730525 | Employee Parking Elevator Rebuilds | (3) | 12/31/2026 | 568,411 | - |
| 895 | 97730526 | HQ Cooling Towers Replacement | (3) | 10/31/2026 | 500,047 | - |
| 896 | 97730624 | HQ Roof Replacement 2024 | (5) | 5/26/2026 | 1,043,396 | - |
| 897 | 97730625 | HQ Chillers Replacement | (3) | 7/31/2026 | 1,878,696 | - |
| 898 | 97730725 | PNM HQ Executive Gates | (5) | 3/31/2026 | 527,169 | 245,155 |
| 899 | 97731007 | Gen Svcs Bldg Maint Blanket - Corp | (3)(8) | Blanket | Blanket | 547,749 |
| 900 | 97731121 | HQ Building Boiler Upgrades | (5) | 5/26/2026 | 1,137,693 | - |
| 901 | 97732025 | HQ Video Sec Augmentation 2025 | (5) | 9/1/2026 | 80,171 | - |
| 902 | 97734126 | Security Mitigation Program 2026 | (5) | 12/31/2026 | 17,094 | - |
| 903 | 98628124 | EAM Modernization | (3)(8) | 12/31/2027 | 34,301,682 | 75,043 |
| 904 | 98628224 | Maximo Distribution Asset Mgmt 2024 | (5) | 6/30/2026 | 312,445 | 317,023 |
| 905 | 99329907 | Payroll Accrual 2015 | (5) | Blanket | Blanket | 34,154 |
| 906 | | | | | | |
| 907 | | Undistributed Balances-184 Clearing Account | | | | 4,236,530 |

| | A | B | C | D | E | F |
|---|---|---|---|---|---|---|
| 1 | **Public Service Company of New Mexico** | | | | | |
| 2 | **Schedule B-4** | | | | | |
| 3 | **Construction Work In Progress** | | | | | |
| 4 | **Base Period Ending 6/30/2026** | | | | | |
| 5 | **Test Period Ending 9/30/2028** | | | | | |
| 6 | **This schedule is sponsored by PNM Witness Gutierrez** | | | | | |
| 7 | **Project #** | **Project Description** | **Notes** | **Estimated Completion Date** | **Estimated Cost of Project** | **Base Period Beginning Balance Jul-25** |
| 908 | | Retirement Work in Progress-108 Account | | | | 627,446 |
| 909 | | | | | | |
| 910 | | **Total Corporate** | | | | **19,561,829** |
| 911 | | Less CWIP Clearings Deferred to a Future Rate Case | | | | |
| 912 | | ColdFusion Upg 2027 | | | | |
| 913 | | CPR OT Assets Annual Refresh 2027 | | | | |
| 914 | | Phys Sec New Cap Prog 2027 | | | | |
| 915 | | C Cure ELA 2027 | | | | |
| 916 | | General Bldg and MRF Upgrades | | | | |
| 917 | | Gen Svcs Bldg Maint Blanket - Corp | | | | |
| 918 | | EAM Modernization | | | | |
| 919 | | Less Retirement Work in Progress-108 Account | | | | |
| 920 | | **Schedule B-1 Total Corporate Plant in Service Additions** | | | | |

| | A | B | G | H | I | J |
|---|---|---|---|---|---|---|
| 1 | **Public Service Company of New Mexico** | | | | | |
| 2 | **Schedule B-4** | | | | | |
| 3 | **Construction Work In Progress** | | | | | |
| 4 | **Base Period Ending 6/30/2026** | | | | | |
| 5 | **Test Period Ending 9/30/2028** | | | | | |
| 6 | **This schedule is sponsored by PNM Witness Gutierrez** | | | | | |
| 7 | **Project #** | **Project Description** | **Expenditures Through End of Base Period** | **Clearings Through End of Base Period** | **Base Period Ending Balance Jun-26** | **Linkage Beginning Balance Jul-26** |
| 8 | | **Distribution** | | | | |
| 9 | 01099707 | PNM Electric Salvage | (7,780) | - | (11,230) | (11,230) |
| 10 | 09128021 | Customer Experience Program 2021 | (10) | - | - | - |
| 11 | 09128026 | Customer Experience Program 2026 | 137,324 | - | 137,324 | 137,324 |
| 12 | 09128027 | Customer Experience Program 2027 | - | - | - | - |
| 13 | 09128052 | Co 1-Tibco Integration Suite Upg To | (2,645) | 2,645 | - | - |
| 14 | 09128127 | Liferay & PNM.com Platform Upg 2027 | - | - | - | - |
| 15 | 09128128 | CIS Replacement | - | - | - | - |
| 16 | 09128323 | ArcFM Upgr to Utility Network Co 1 | 8,539 | (70,084) | - | - |
| 17 | 09128325 | Community Solar 2025 Cust Consent | 76,598 | (120,413) | - | - |
| 18 | 09128326 | Customer Comm CANSPAM Pref 2026 | - | - | - | - |
| 19 | 09128327 | New Customer Comm Platform 2027 | - | - | - | - |
| 20 | 09128328 | Community Solar Cons Bill 2028 | - | - | - | - |
| 21 | 09128525 | NM Cascade Upgrade 2025 | 222,575 | (328,690) | - | - |
| 22 | 09128528 | PNM.com Redesign 2028 | - | - | - | - |
| 23 | 09128625 | Community Solar-PRC Additions 2025 | 247,474 | (247,474) | - | - |
| 24 | 09128725 | NICE InContact Program | 3,299,784 | (3,271,895) | 27,888 | 27,888 |
| 25 | 09128822 | PNM Bill Redesign | 191 | (280,543) | - | - |
| 26 | 09132025 | Security Video System 2025-NM | 139,512 | (139,512) | - | - |
| 27 | 10000105 | Residential Line Extensions | - | - | (495) | (495) |
| 28 | 10000107 | Line Extensions - Residential | 4,118,248 | (3,046,310) | 2,175,052 | 2,175,052 |
| 29 | 10000205 | Commercial Line Extensions | - | - | 17,486 | 17,486 |
| 30 | 10000206 | Line Extensions - Commercial | - | - | 7,761 | 7,761 |
| 31 | 10000207 | Line Extensions - Commercial | 5,049,419 | (4,518,342) | 1,327,916 | 1,327,916 |
| 32 | 10000241 | Line Extensions - Residential | - | - | (5,856) | (5,856) |
| 33 | 10000407 | Line Extensions - Misc. | 67,302 | (18,336) | 28,149 | 28,149 |
| 34 | 10000507 | Lighting | 48,552 | (9,415) | 39,216 | 39,216 |
| 35 | 10000508 | Lighting T&D | 1,119,724 | (1,369,038) | 485,466 | 485,466 |
| 36 | 10000607 | Distr. Remove & Replace | 3,992,908 | (3,341,116) | 1,875,551 | 1,875,551 |
| 37 | 10000608 | Dist. Remove & Replace T&D | 6,404,382 | (6,524,801) | 967,531 | 967,531 |

| | A | B | G | H | I | J |
|---|---|---|---|---|---|---|
| 1 | **Public Service Company of New Mexico** | | | | | |
| 2 | **Schedule B-4** | | | | | |
| 3 | **Construction Work In Progress** | | | | | |
| 4 | **Base Period Ending 6/30/2026** | | | | | |
| 5 | **Test Period Ending 9/30/2028** | | | | | |
| 6 | **This schedule is sponsored by PNM Witness Gutierrez** | | | | | |
| 7 | **Project #** | **Project Description** | **Expenditures Through End of Base Period** | **Clearings Through End of Base Period** | **Base Period Ending Balance Jun-26** | **Linkage Beginning Balance Jul-26** |
| 38 | 10000707 | Distr. System Improvements | 23,658,165 | (20,797,257) | 5,577,395 | 5,577,395 |
| 39 | 10000807 | Services | 17,491,778 | (17,609,820) | 3,291,724 | 3,291,724 |
| 40 | 10000907 | Transformers | 11,737,966 | (12,303,152) | 376,948 | 376,948 |
| 41 | 10001007 | Meter Equipment | 4,132,146 | (4,091,163) | 65,818 | 65,818 |
| 42 | 10001207 | Pole Replacements | 556 | - | 9,388 | 9,388 |
| 43 | 10001307 | Cable Replacement | 5,243 | - | 88,527 | 88,527 |
| 44 | 10001617 | Voltage Cont Cap Upgrade to Two Way | - | - | (0) | (0) |
| 45 | 10001626 | CENT11 & VOLC11 Conductor Upgrade | - | - | - | - |
| 46 | 10001627 | Central OSMOSE Replacements 27-28 | - | - | - | - |
| 47 | 10001707 | Albuquerque Pure Project | 2,156,312 | (2,406,602) | 464,016 | 464,016 |
| 48 | 10001717 | 8th Street Circuit Rebuild | 1,270 | - | 21,446 | 21,446 |
| 49 | 10001725 | Project Array | 363,583 | (935,391) | 541 | 541 |
| 50 | 10001826 | San Pedro Widening | - | - | - | - |
| 51 | 10001922 | Overlook Distribution Rebuild | 125,392 | - | 1,871,749 | 1,871,749 |
| 52 | 10001924 | 614 Cedar Hill Rd NE | 1,195,159 | (1,322,186) | - | - |
| 53 | 10001928 | Corrales Bluff 14 Feeder | - | - | - | - |
| 54 | 10002010 | Four Hills 13 to Lawrence 14 Feeder | 61,078 | - | 252,754 | 252,754 |
| 55 | 10002022 | Valencia Substation Rebuild | 2,724,682 | - | 4,465,828 | 4,465,828 |
| 56 | 10002125 | Lightning Mitigation 2025-2026 | 88,393 | - | 88,393 | 88,393 |
| 57 | 10002143 | Asset Health Mntrg-Event-24-28 Co1 | 1,795 | (175,775) | - | - |
| 58 | 10002224 | AT&T Vault Relocation | 235,019 | - | (573,370) | (573,370) |
| 59 | 10002316 | Bird Guard Reliability | 12,350 | (179,065) | 20,005 | 20,005 |
| 60 | 10002325 | 4th Street and St Mary's Way | 433,787 | - | 433,787 | 433,787 |
| 61 | 10002326 | Angel Rd - CRP 23-24 | 1,152,047 | (1,152,047) | - | - |
| 62 | 10002327 | Central Feeder Upgrades | - | - | - | - |
| 63 | 10002421 | Sandia 46kV Breaker Replacement | 2,682,956 | (1,413,834) | 2,425,408 | 2,425,408 |
| 64 | 10002425 | Camino Sin Pasada - CRP2324 | 811,787 | (811,787) | - | - |
| 65 | 10002516 | Pole Grounds Co01 | 106,942 | (74,902) | 36,475 | 36,475 |
| 66 | 10003020 | ELDO12 Feeder Rebuild | 2,486,068 | (5,907,704) | (2,530) | (2,530) |
| 67 | 10003125 | Project Chase | - | - | (40,000) | (40,000) |

| | A | B | G | H | I | J |
|---|---|---|---|---|---|---|
| 1 | **Public Service Company of New Mexico** | | | | | |
| 2 | **Schedule B-4** | | | | | |
| 3 | **Construction Work In Progress** | | | | | |
| 4 | **Base Period Ending 6/30/2026** | | | | | |
| 5 | **Test Period Ending 9/30/2028** | | | | | |
| 6 | **This schedule is sponsored by PNM Witness Gutierrez** | | | | | |
| 7 | **Project #** | **Project Description** | **Expenditures Through End of Base Period** | **Clearings Through End of Base Period** | **Base Period Ending Balance Jun-26** | **Linkage Beginning Balance Jul-26** |
| 68 | 10003225 | Sandia 46kV Relay Replacement | 4,472,788 | (2,946,828) | 2,222,601 | 2,222,601 |
| 69 | 10003521 | LSCH12 Feeder Rebuild | 1,789,224 | (3,266,740) | - | - |
| 70 | 10003621 | SOCO12 Feeder Rebuild | 1,302 | (1,302) | - | - |
| 71 | 10003721 | BACA12 Feeder Rebuild | 17,337 | (17,337) | - | - |
| 72 | 10003722 | ELCE11 Feeder Rebuild | 17,499 | (72,242) | - | - |
| 73 | 10005121 | ELCE12 Feeder Rebuild | 37,368 | (37,368) | - | - |
| 74 | 10005228 | Central Osmose Pole Replacements | 1,627,754 | (1,356,400) | 271,354 | 271,354 |
| 75 | 10005251 | Mesa del Sol Infrastructure CO1 | 6,163,092 | - | 6,163,092 | 6,163,092 |
| 76 | 10005328 | Palomas Feeders | - | - | - | - |
| 77 | 10005424 | Sol Substation Permanent Power | (1) | - | 0 | 0 |
| 78 | 10005726 | Westpointe Substation-DIST | 6,592,442 | - | 6,592,442 | 6,592,442 |
| 79 | 10005821 | ISLE12 Feeder Rebuild | 67,309 | - | 1,121,757 | 1,121,757 |
| 80 | 10005922 | Prager 12 Volt Imprvmt and Recdtr | (47,191) | 47,191 | - | - |
| 81 | 10030524 | ESC Admin 2nd Floor Remodel | 118,355 | (124,657) | - | - |
| 82 | 10030526 | ESC Line Truck Barn Replacement | 61,118 | - | 61,118 | 61,118 |
| 83 | 10030610 | Communication and Equipment Blanket | 122,148 | (97,765) | 35,950 | 35,950 |
| 84 | 10031922 | Gen Svcs Bldg Maint Blanket-Distr | 329,873 | (428,679) | 243,345 | 243,345 |
| 85 | 10032025 | Furniture for Y Mora office | 17,775 | (17,775) | - | - |
| 86 | 10034007 | ABQ Metro 2010 Tools & Equipment | 264,426 | (126,874) | 138,130 | 138,130 |
| 87 | 10034012 | Tech Services Distribution Tools | 171,631 | (53,596) | 118,097 | 118,097 |
| 88 | 10505323 | Grid Mod - AMI (Advcd Mtrg Infrstr) | 23,852,553 | (18,430,609) | 17,168,792 | 17,168,792 |
| 89 | 10505423 | Grid Mod - Distribution Automation | 628,116 | - | 628,116 | 628,116 |
| 90 | 10505623 | Grid Mod - Dist Planning & Engineer | - | - | - | - |
| 91 | 10528023 | Grid Mod - Customer Info and Analyt | 3,150,109 | (2,409,705) | 740,404 | 740,404 |
| 92 | 10528123 | Grid Mod - Cybersecurity | 2,613,068 | - | 2,613,068 | 2,613,068 |
| 93 | 10528223 | Grid Mod - ADMS | 2,842,838 | - | 2,842,838 | 2,842,838 |
| 94 | 10528323 | Grid Mod - Data Mgmt & Architecture | 306,908 | - | 1,167,311 | 1,167,311 |
| 95 | 10534224 | Grid Mod - Telecommunications | 1,104,425 | (385,853) | 718,572 | 718,572 |
| 96 | 14000107 | Line Extensions - Residential | 316,293 | (353,189) | 599,098 | 599,098 |
| 97 | 14000207 | Line Extensions - Commercial | 96,110 | (88,167) | 11,961 | 11,961 |

| | A | B | G | H | I | J |
|---|---|---|---|---|---|---|
| 1 | **Public Service Company of New Mexico** | | | | | |
| 2 | **Schedule B-4** | | | | | |
| 3 | **Construction Work In Progress** | | | | | |
| 4 | **Base Period Ending 6/30/2026** | | | | | |
| 5 | **Test Period Ending 9/30/2028** | | | | | |
| 6 | **This schedule is sponsored by PNM Witness Gutierrez** | | | | | |
| 7 | **Project #** | **Project Description** | **Expenditures Through End of Base Period** | **Clearings Through End of Base Period** | **Base Period Ending Balance Jun-26** | **Linkage Beginning Balance Jul-26** |
| 98 | 14000407 | Line Extension - Misc. | (1,211) | - | - | - |
| 99 | 14000607 | Distr. Remove & Replace | 195,662 | (188,110) | 69,969 | 69,969 |
| 100 | 14000707 | Distr. System Improvements | 233,042 | (272,911) | 30,127 | 30,127 |
| 101 | 14001207 | Pole Replacements | - | - | 0 | 0 |
| 102 | 14001307 | Cable Replacement | - | - | (0) | (0) |
| 103 | 14001621 | TIJE12 Feeder Rebuild | 601 | - | 2,137,140 | 2,137,140 |
| 104 | 15000508 | Lighting T&D | 438,759 | (413,876) | 137,810 | 137,810 |
| 105 | 15000608 | Distr. Remove & Replace T&D | 5,347,558 | (2,701,110) | 4,186,419 | 4,186,419 |
| 106 | 15001816 | Cliff Sub Rebuild | (4,942) | 4,942 | - | - |
| 107 | 15002316 | Bird Guard Reliabilty Co34 | 447,678 | (403,948) | 95,261 | 95,261 |
| 108 | 15003010 | Substation Equipment Repl. blanket | - | - | 7 | 7 |
| 109 | 15003019 | Lordsburg Substation Improvements | (2,943) | 2,943 | - | - |
| 110 | 15034011 | Southern Tools & Equipment | 155,552 | (146,360) | 44,397 | 44,397 |
| 111 | 15100107 | Line Extensions - Residential | 308,184 | (257,410) | 67,571 | 67,571 |
| 112 | 15100207 | Line Extensions - Commercial | 349,144 | (225,718) | 30,092 | 30,092 |
| 113 | 15100407 | Line Extensions - Misc. | 14,458 | (14,458) | - | - |
| 114 | 15100507 | Lighting | (4,394) | (184,780) | - | - |
| 115 | 15100607 | Distr. Remove & Replace | 2,086 | (2,086) | 0 | 0 |
| 116 | 15100707 | Distr. System Improvements | 34,754 | (158,447) | 71,661 | 71,661 |
| 117 | 15100807 | Services | 389,902 | (354,469) | 110,064 | 110,064 |
| 118 | 15100907 | Transformers | 504,065 | (498,288) | 23,167 | 23,167 |
| 119 | 15101007 | Meter Equipment | 72,547 | (60,374) | 12,173 | 12,173 |
| 120 | 15101207 | Pole Replacement | - | - | (0) | (0) |
| 121 | 15101807 | Alamorgordo Pure Project | 543,559 | (440,986) | 120,444 | 120,444 |
| 122 | 15102019 | Tularosa 13 Ph Load Bal-Voltage Reg | 10,201 | - | 132,641 | 132,641 |
| 123 | 15102026 | Alamogordo Land CO1 | 670,462 | (670,462) | - | - |
| 124 | 15105222 | Alamogordo Substation Co1 | (1,182,250) | - | (0) | (0) |
| 125 | 15200107 | Line Extensions - Residential | 542,925 | (451,540) | 163,554 | 163,554 |
| 126 | 15200207 | Line Extensions - Commercial | 50,573 | (55,276) | (3,051) | (3,051) |
| 127 | 15200407 | Line Extensions - Misc. | 1,803 | (1,803) | - | - |

| | A | B | G | H | I | J |
|---|---|---|---|---|---|---|
| 1 | **Public Service Company of New Mexico** | | | | | |
| 2 | **Schedule B-4** | | | | | |
| 3 | **Construction Work In Progress** | | | | | |
| 4 | **Base Period Ending 6/30/2026** | | | | | |
| 5 | **Test Period Ending 9/30/2028** | | | | | |
| 6 | **This schedule is sponsored by PNM Witness Gutierrez** | | | | | |
| 7 | **Project #** | **Project Description** | **Expenditures Through End of Base Period** | **Clearings Through End of Base Period** | **Base Period Ending Balance Jun-26** | **Linkage Beginning Balance Jul-26** |
| 128 | 15200507 | Lighting | - | (21,459) | 175,906 | 175,906 |
| 129 | 15200607 | Distr. Remove & Replace | (1,395) | 1,395 | (1,333) | (1,333) |
| 130 | 15200707 | Distr. System Improvements | 946,103 | (1,045,458) | 215,979 | 215,979 |
| 131 | 15200807 | Services | 458,285 | (470,069) | 101,583 | 101,583 |
| 132 | 15200907 | Transformers | 662,301 | (633,975) | 28,615 | 28,615 |
| 133 | 15201007 | Meter Equipment | 15,556 | (15,556) | - | - |
| 134 | 15201707 | Ruidoso Pure Project | 197,701 | (190,774) | 35,325 | 35,325 |
| 135 | 15202025 | Ruidoso Hospital Upgrade | - | - | - | - |
| 136 | 15205224 | South Fork Fire Restoration | 1,929,146 | (3,479,133) | - | - |
| 137 | 15500107 | Line Extensions - Residential | 338,204 | (278,957) | 242,547 | 242,547 |
| 138 | 15500207 | Line Extensions - Commercial | 217,371 | (119,126) | 111,324 | 111,324 |
| 139 | 15500407 | Line Extensions - Misc. | 6,609 | 1,580 | 8,112 | 8,112 |
| 140 | 15500507 | Lighting | - | - | 26,198 | 26,198 |
| 141 | 15500607 | Distr. Remove & Replace | 386,850 | (392,319) | 1,231 | 1,231 |
| 142 | 15500707 | Distr. System Improvements | 805,995 | (63,074) | 793,902 | 793,902 |
| 143 | 15500807 | Services | 475,283 | (457,816) | 104,949 | 104,949 |
| 144 | 15500907 | Transformers | 337,970 | (331,980) | 14,154 | 14,154 |
| 145 | 15501007 | Meter Equipment | 56,581 | (56,581) | - | - |
| 146 | 15501707 | Silver City Pure Project | 941,971 | (348,706) | 581,096 | 581,096 |
| 147 | 15502027 | MD-1 Spare Transformer Replacements | - | - | - | - |
| 148 | 15502321 | Gila National Forest CO1 | 1,168,203 | (5,132,549) | 504,261 | 504,261 |
| 149 | 15505225 | HFA Pole Rplc SilverCity/Ruidoso | 3,995,983 | (3,052,007) | 1,437,245 | 1,437,245 |
| 150 | 15530525 | HVAC Silver City Service Centers | 107,729 | (107,729) | - | - |
| 151 | 15530621 | Silver City Metal Building | - | - | 62,401 | 62,401 |
| 152 | 15530624 | Standing Seam Metal Roof | 16,951 | (16,951) | - | - |
| 153 | 20000107 | Line Extensions - Residential | 45,795 | (60,816) | 44,718 | 44,718 |
| 154 | 20000207 | Line Extensions - Commercial | 188,605 | (300,768) | (70,938) | (70,938) |
| 155 | 20000407 | Line Extension - Misc. | 4,289 | - | 4,289 | 4,289 |
| 156 | 20000507 | Lighting | - | - | 22,423 | 22,423 |
| 157 | 20000607 | Distr. Remove & Replace | 27,483 | (8,236) | 94,101 | 94,101 |

| | A | B | G | H | I | J |
|---|---|---|---|---|---|---|
| 1 | **Public Service Company of New Mexico** | | | | | |
| 2 | **Schedule B-4** | | | | | |
| 3 | **Construction Work In Progress** | | | | | |
| 4 | **Base Period Ending 6/30/2026** | | | | | |
| 5 | **Test Period Ending 9/30/2028** | | | | | |
| 6 | **This schedule is sponsored by PNM Witness Gutierrez** | | | | | |
| 7 | **Project #** | **Project Description** | **Expenditures Through End of Base Period** | **Clearings Through End of Base Period** | **Base Period Ending Balance Jun-26** | **Linkage Beginning Balance Jul-26** |
| 158 | 20000707 | Distr. System Improvements | 21,091 | (87,609) | 126,613 | 126,613 |
| 159 | 20000807 | Services | 199,595 | (169,781) | 60,732 | 60,732 |
| 160 | 20001207 | Pole Replacements | - | - | 0 | 0 |
| 161 | 20001707 | Deming Pure Project | 105,498 | (189,417) | 22,946 | 22,946 |
| 162 | 20001722 | Deming & Gold Substations | 33,946 | - | 922,294 | 922,294 |
| 163 | 20002024 | Deming Streetlight Upgrades | 273,231 | (273,231) | - | - |
| 164 | 20003026 | Hondale Transformer Replacement | - | - | - | - |
| 165 | 20030526 | Deming Station Roof Repair | - | - | - | - |
| 166 | 30000107 | Line Extensions - Residential | 128,327 | (88,866) | 53,334 | 53,334 |
| 167 | 30000207 | Line Extensions - Commercial | 273,894 | (162,517) | 184,058 | 184,058 |
| 168 | 30000607 | Distr. Remove & Replace | 103,895 | (104,195) | 16,389 | 16,389 |
| 169 | 30000705 | Distr. System Imp. | - | - | 71 | 71 |
| 170 | 30000707 | Distr. System Improvements | 29,649 | (8,726) | 73,635 | 73,635 |
| 171 | 30000807 | Services | 405,082 | (421,920) | 81,704 | 81,704 |
| 172 | 30001623 | Las Vegas Streetlight Upgrades | (7,888) | 7,888 | - | - |
| 173 | 30001707 | Las Vegas Pure Project | (0) | 0 | - | - |
| 174 | 41000107 | Line Extensions - Residential | 1,911,954 | (2,549,422) | 959,148 | 959,148 |
| 175 | 41000207 | Line Extensions - Commercial | 511,413 | (1,014,222) | 472,978 | 472,978 |
| 176 | 41000407 | Line Extensions - Misc. | 167,592 | - | 158,259 | 158,259 |
| 177 | 41000507 | Lighting | 3,448 | - | - | - |
| 178 | 41000508 | Lighting T&D | 138 | (138) | - | - |
| 179 | 41000607 | Distr. Remove & Replace | 647,518 | (290,257) | 923,303 | 923,303 |
| 180 | 41000608 | Distr. Remove & Replace T&D | 553,499 | (407,863) | 211,867 | 211,867 |
| 181 | 41000707 | Distr. System Improvements | 620,631 | (528,557) | 526,359 | 526,359 |
| 182 | 41000807 | Services | 3,148,186 | (3,013,591) | 703,139 | 703,139 |
| 183 | 41001621 | Distribution Looping in SF-WFF | (259,073) | 259,073 | 0 | 0 |
| 184 | 41001622 | Caja Del Rio 13 Backbone Upgrade | 832,387 | (5,368,843) | - | - |
| 185 | 41001625 | Los Suenos Trail SF and Backbone | 1,069,424 | (2,208,027) | - | - |
| 186 | 41001707 | Santa Fe Pure Project | 67,094 | (98,754) | - | - |
| 187 | 41001720 | Santa Fe Streetlight Conversion | (21,299) | (502,328) | - | - |

| | A | B | G | H | I | J |
|---|---|---|---|---|---|---|
| 1 | **Public Service Company of New Mexico** | | | | | |
| 2 | **Schedule B-4** | | | | | |
| 3 | **Construction Work In Progress** | | | | | |
| 4 | **Base Period Ending 6/30/2026** | | | | | |
| 5 | **Test Period Ending 9/30/2028** | | | | | |
| 6 | **This schedule is sponsored by PNM Witness Gutierrez** | | | | | |
| 7 | **Project #** | **Project Description** | **Expenditures Through End of Base Period** | **Clearings Through End of Base Period** | **Base Period Ending Balance Jun-26** | **Linkage Beginning Balance Jul-26** |
| 188 | 41001721 | FOMA13 Feeder Rebuild | 845,825 | (3,405) | 2,116,725 | 2,116,725 |
| 189 | 41001820 | SF Switchgear Replacements 20-24 | (62,648) | (78,679) | - | - |
| 190 | 41001825 | Cerillos Rd | 67,599 | - | 67,599 | 67,599 |
| 191 | 41001924 | Zafarano Feeder 13 Norm Loading SI | 48,315 | (46,931) | - | - |
| 192 | 41002015 | Caja del Rio 11 to Beckner 12 FT | - | - | - | - |
| 193 | 41002023 | El Dorado 12 Phase 2 Feeder Rebuild | 4,479,508 | (4,895,882) | 354,142 | 354,142 |
| 194 | 41002025 | Estrada Maya - CRP1P | 2,176,873 | (2,557,587) | - | - |
| 195 | 41002124 | Beckner 14 Line Extension | - | - | - | - |
| 196 | 41002215 | Mejia 14 to SantaFeEstates Line Ext | 8,251 | - | 139,308 | 139,308 |
| 197 | 41002316 | Bird Guard Reliabilty | 21,319 | (18,972) | 4,136 | 4,136 |
| 198 | 41002425 | CamelTracks13 to StatePen12 Feeder | - | - | - | - |
| 199 | 41002516 | Pole Grounds | 14,055 | (12,924) | 7,469 | 7,469 |
| 200 | 41002525 | STPE12 HC Solution | 1,325,308 | - | 1,325,308 | 1,325,308 |
| 201 | 41002724 | COLI13 Feeder Rebuild Phase 2 | 6,158,222 | (15,454,585) | 847,096 | 847,096 |
| 202 | 41002824 | Mejia 115kV Transformer LTC Failure | 867,409 | (642,324) | 225,982 | 225,982 |
| 203 | 41003027 | Santa Fe 46kV Pole Replacemnt 2028 | - | - | - | - |
| 204 | 41005221 | COLI13 Feeder Rebuild | 36,124 | (1,498,791) | (0) | (0) |
| 205 | 41005324 | STPE13 Feeder Rebuild | 10,335,661 | (11,848,933) | 5,231,332 | 5,231,332 |
| 206 | 41005328 | Santa Fe 46kV Pole Replacement 2029 | - | - | - | - |
| 207 | 41005525 | Zia Substation Rebuild CO1 | - | - | - | - |
| 208 | 41030526 | Santa Fe Cooling Tower Replacement | - | - | - | - |
| 209 | 41030820 | Santa Fe Building Improvements | 272,308 | (272,308) | - | - |
| 210 | 41034007 | Tools & Equipment | 194,210 | (201,011) | 22,685 | 22,685 |
| 211 | 41037005 | M&J - Comcast connects | - | - | (333) | (333) |
| 212 | 50000107 | Line Extensions - Residential | 1,209,147 | (1,374,241) | 297,360 | 297,360 |
| 213 | 50000207 | Line Extensions - Commercial | 949,465 | (1,252,683) | (221,773) | (221,773) |
| 214 | 50000407 | Line extensions - Misc. | - | - | 0 | 0 |
| 215 | 50000507 | Lighting | - | - | - | - |
| 216 | 50000607 | Distr. Remove & Replace | 1,000,379 | (669,590) | 528,873 | 528,873 |
| 217 | 50000707 | Distr. System Improvements | 470,070 | (444,600) | 266,450 | 266,450 |

| | A | B | G | H | I | J |
|---|---|---|---|---|---|---|
| 1 | **Public Service Company of New Mexico** | | | | | |
| 2 | **Schedule B-4** | | | | | |
| 3 | **Construction Work In Progress** | | | | | |
| 4 | **Base Period Ending 6/30/2026** | | | | | |
| 5 | **Test Period Ending 9/30/2028** | | | | | |
| 6 | **This schedule is sponsored by PNM Witness Gutierrez** | | | | | |
| 7 | **Project #** | **Project Description** | **Expenditures Through End of Base Period** | **Clearings Through End of Base Period** | **Base Period Ending Balance Jun-26** | **Linkage Beginning Balance Jul-26** |
| 218 | 60000804 | Community Solar Services | 2,787,909 | 807,985 | (631,245) | (631,245) |
| 219 | 60001627 | Distribution Telecom 2027-2028 | - | - | - | - |
| 220 | 60001628 | COPR Central OSMOSE 2028-2029 | - | - | - | - |
| 221 | 60001643 | Sandia 115kV Dist | - | (5,629) | - | - |
| 222 | 60001644 | Cable Replacement Program 2023-2024 | 826,043 | (185,406) | 637,009 | 637,009 |
| 223 | 60001645 | Cable Replacement Program 2024-2025 | 468,188 | (2,931,899) | 137,524 | 137,524 |
| 224 | 60001646 | Cable Replacement Program 2025-2026 | 7,721,972 | (3,548,108) | 4,173,864 | 4,173,864 |
| 225 | 60001647 | Cable Replacement Program 2026-2027 | - | - | - | - |
| 226 | 60001648 | Cable Replacement Program 2027-2028 | - | - | - | - |
| 227 | 60001649 | Cable Replacement Program 2028-2029 | - | - | - | - |
| 228 | 60001715 | Storm Funding Project Co01 | 1,414,909 | (1,414,521) | (0) | (0) |
| 229 | 60001719 | SCADAMATE Switches (OVERHEAD) | - | - | 0 | 0 |
| 230 | 60001721 | Single Phase URD Replacement-WFF | 9,223 | (9,223) | - | - |
| 231 | 60001725 | Sub-Transmission Recloser Install | 305,813 | - | 305,813 | 305,813 |
| 232 | 60001726 | Distribution Telecom 2026-2027 | - | - | - | - |
| 233 | 60001727 | Northern OSMOSE Pole Rplcmnts 27-28 | - | - | - | - |
| 234 | 60001728 | NORP Northern OSMOSE 2028-2029 | - | - | - | - |
| 235 | 60001744 | Dist Struc Replace and Upgrade 2023 | 15,850 | (15,850) | (0) | (0) |
| 236 | 60001745 | Dist Struc Replace and Upgrade 2024 | 608,399 | (944,487) | 4,767 | 4,767 |
| 237 | 60001746 | Dist Struc Replace and Upgrade 2025 | 218,053 | - | 218,053 | 218,053 |
| 238 | 60001747 | Dist Struc Replace and Upgrade 2026 | - | - | - | - |
| 239 | 60001748 | Dist Struc Replace and Upgrade 2027 | - | - | - | - |
| 240 | 60001749 | Dist Struc Replace and Upgrade 2028 | - | - | - | - |
| 241 | 60001822 | Hawkins Substation | 32,083 | - | 1,960,523 | 1,960,523 |
| 242 | 60001826 | State Wide Private Light Conversion | 63,729 | - | 63,729 | 63,729 |
| 243 | 60001828 | SOPR Southern OSMOSE 2028-2029 | - | - | - | - |
| 244 | 60001844 | Switchgear Replace and Upgrade 2023 | 16,124 | (16,124) | - | - |
| 245 | 60001845 | Switchgear Replace and Upgrade 2024 | 1,082,135 | (1,347,077) | 79,619 | 79,619 |
| 246 | 60001846 | Switchgear Replace and Upgrade 2025 | 816,260 | (163,295) | 652,777 | 652,777 |
| 247 | 60001847 | Switchgear Replace and Upgrade 2026 | - | - | - | - |

| | A | B | G | H | I | J |
|---|---|---|---|---|---|---|
| 1 | **Public Service Company of New Mexico** | | | | | |
| 2 | **Schedule B-4** | | | | | |
| 3 | **Construction Work In Progress** | | | | | |
| 4 | **Base Period Ending 6/30/2026** | | | | | |
| 5 | **Test Period Ending 9/30/2028** | | | | | |
| 6 | **This schedule is sponsored by PNM Witness Gutierrez** | | | | | |
| 7 | **Project #** | **Project Description** | **Expenditures Through End of Base Period** | **Clearings Through End of Base Period** | **Base Period Ending Balance Jun-26** | **Linkage Beginning Balance Jul-26** |
| 248 | 60001848 | Switchgear Replace and Upgrade 2027 | - | - | - | - |
| 249 | 60001849 | Switchgear Replace and Upgrade 2028 | - | - | - | - |
| 250 | 60001925 | Rodeo Substation Rebuild CO1 | 3,996,636 | - | 3,996,636 | 3,996,636 |
| 251 | 60001927 | Joint Use Make Ready 2027 | - | - | - | - |
| 252 | 60001928 | Distribution Telecomm 2028-2029 | - | - | - | - |
| 253 | 60001944 | Smart Devi Replace and Upgrade 2023 | 16,956 | (16,967) | 0 | 0 |
| 254 | 60001945 | Smart Devi Replace and Upgrade 2024 | 2,061,691 | (2,568,008) | 38,367 | 38,367 |
| 255 | 60001946 | Smart Devi Replace and Upgrade 2025 | 897,172 | (148,762) | 758,315 | 758,315 |
| 256 | 60001947 | Smart Devi Replace and Upgrade 2026 | - | - | - | - |
| 257 | 60001948 | Smart Devi Replace and Upgrade 2027 | - | - | - | - |
| 258 | 60001949 | Smart Devi Replace and Upgrade 2028 | - | - | - | - |
| 259 | 60002010 | Misc Substation Improvements Blanke | - | - | - | - |
| 260 | 60002019 | Circuit Switcher Repl/Upgrade Distr | 20,174 | (17,575) | 2,599 | 2,599 |
| 261 | 60002023 | Los Luans Capacity Phase IV - Distr | 364,583 | (365,538) | - | - |
| 262 | 60002044 | PRC-002 Compliance DFR - Dist | 1,757 | - | 25,791 | 25,791 |
| 263 | 60002046 | Distr Comm Improvement 2026-2030 | - | - | - | - |
| 264 | 60002050 | Highway Crossings 2025-2026 | 8,769 | - | 8,769 | 8,769 |
| 265 | 60002110 | Misc 46kv Line | 805,214 | (595,994) | 370,886 | 370,886 |
| 266 | 60002120 | Distribution Relay Replacement | (0) | 0 | - | - |
| 267 | 60002144 | Open Wire Secondary Upgrade 2023-20 | - | - | 0 | 0 |
| 268 | 60002145 | Open Wire Secondary Upgrade 2024-20 | 1,075,491 | (1,275,940) | 2,041 | 2,041 |
| 269 | 60002146 | Open Wire Secondary Upgrade 2025-20 | 1,219,979 | (404,383) | 815,596 | 815,596 |
| 270 | 60002147 | Open Wire Secondary Upgrade 2026 | - | - | - | - |
| 271 | 60002148 | Open Wire Secondary Upgrade 2027 | - | - | - | - |
| 272 | 60002149 | Open Wire Secondary Upgrade 2028 | - | - | - | - |
| 273 | 60002206 | Deming SCADA & RCCS Upgrade | - | - | (2,625) | (2,625) |
| 274 | 60002226 | Facility Conflicts 2026 | - | - | - | - |
| 275 | 60002227 | Facility Conflicts 2027 | - | - | - | - |
| 276 | 60002228 | Facility Conflicts 2028 | - | - | - | - |
| 277 | 60002244 | Distribution Looping 2023-2024 | 122,612 | (122,117) | (0) | (0) |

| | A | B | G | H | I | J |
|---|---|---|---|---|---|---|
| 1 | **Public Service Company of New Mexico** | | | | | |
| 2 | **Schedule B-4** | | | | | |
| 3 | **Construction Work In Progress** | | | | | |
| 4 | **Base Period Ending 6/30/2026** | | | | | |
| 5 | **Test Period Ending 9/30/2028** | | | | | |
| 6 | **This schedule is sponsored by PNM Witness Gutierrez** | | | | | |
| 7 | **Project #** | **Project Description** | **Expenditures Through End of Base Period** | **Clearings Through End of Base Period** | **Base Period Ending Balance Jun-26** | **Linkage Beginning Balance Jul-26** |
| 278 | 60002245 | Distribution Looping 2024-2025 | 3,703,224 | (3,950,708) | 1,158,815 | 1,158,815 |
| 279 | 60002246 | Distribution Looping 2025-2026 | 4,220,827 | (1,482,072) | 2,738,756 | 2,738,756 |
| 280 | 60002247 | Distribution Looping 2026-2027 | - | - | - | - |
| 281 | 60002248 | Distribution Looping 2027-2028 | - | - | - | - |
| 282 | 60002249 | Distribution Looping 2028-2029 | - | - | - | - |
| 283 | 60002325 | Project Oppidan | 2,308,735 | (1,076,711) | 1,314,212 | 1,314,212 |
| 284 | 60002327 | Cochiti 12-feeder Improvements Cap | - | - | - | - |
| 285 | 60002328 | Tramway feeders | - | - | - | - |
| 286 | 60002424 | St Cecilia 11 Re-conductor | 299,363 | (299,363) | - | - |
| 287 | 60002442 | Not in Service Conductors-WFF | 42,949 | - | 52,654 | 52,654 |
| 288 | 60002519 | Distribution Comm Improvement 2020 | 1,310 | - | 22,126 | 22,126 |
| 289 | 60002521 | Prosperity Substation | 5,615,117 | (31,227,420) | 379,039 | 379,039 |
| 290 | 60002526 | Project Ranger | 2,942,820 | - | 2,942,820 | 2,942,820 |
| 291 | 60002541 | Wayne Substation | - | - | 2,625 | 2,625 |
| 292 | 60002619 | Sagebrush Station-Distribution | 12,343 | (6,974,335) | 1,901 | 1,901 |
| 293 | 60002622 | ELCE12 Feeder Laterals Rebuild | 472,053 | - | 3,473,842 | 3,473,842 |
| 294 | 60002626 | Central 15 Feeder | - | - | - | - |
| 295 | 60002714 | Pachmann Substation-Distribution | (45,619) | 43,959 | - | - |
| 296 | 60002720 | Distr System Rpl Wire to Insulated | 496 | (496) | (0) | (0) |
| 297 | 60002742 | Switchgear Rpl Vermin Damage-WFF | - | - | (0) | (0) |
| 298 | 60002743 | Recloser Replacements-WFF | (15,971) | - | (0) | (0) |
| 299 | 60002822 | Tramway Substation | - | - | - | - |
| 300 | 60002824 | Dist Substation Ground Replacements | 330,975 | (415,295) | 59,514 | 59,514 |
| 301 | 60002920 | Outage Contingency Plan Impr-WFF | 38,463 | - | 535,611 | 535,611 |
| 302 | 60003023 | CORNELL 14 - Feeder Backbone Rebuil | 2,309,304 | - | 2,309,304 | 2,309,304 |
| 303 | 60003027 | Subtransm Relay Replacement 2027-28 | - | - | - | - |
| 304 | 60003113 | Morris 12 Feeder Rebuild | 4,656,468 | - | 4,656,468 | 4,656,468 |
| 305 | 60003118 | Distr Cable Testing and Replace 201 | (8,458) | - | - | - |
| 306 | 60003119 | Distr Cable Testing - Replace 2019 | - | - | (340) | (340) |
| 307 | 60003126 | Project Lola | (364,305) | - | (364,305) | (364,305) |

| | A | B | G | H | I | J |
|---|---|---|---|---|---|---|
| 1 | **Public Service Company of New Mexico** | | | | | |
| 2 | **Schedule B-4** | | | | | |
| 3 | **Construction Work In Progress** | | | | | |
| 4 | **Base Period Ending 6/30/2026** | | | | | |
| 5 | **Test Period Ending 9/30/2028** | | | | | |
| 6 | **This schedule is sponsored by PNM Witness Gutierrez** | | | | | |
| 7 | **Project #** | **Project Description** | **Expenditures Through End of Base Period** | **Clearings Through End of Base Period** | **Base Period Ending Balance Jun-26** | **Linkage Beginning Balance Jul-26** |
| 308 | 60003421 | Underground Cable-WFF | 576 | (576) | 0 | 0 |
| 309 | 60003520 | Relay Distribution IA | 3,716 | (3,716) | - | - |
| 310 | 60003620 | Van Buren Substation Metering | 242,602 | (481,686) | - | - |
| 311 | 60003621 | Distr Comm Improvement 2021-2025 | 231,761 | (61,543) | 170,218 | 170,218 |
| 312 | 60003625 | Distribution HFA Feeder Relay Rplc | 3,065,508 | (1,514,221) | 1,551,287 | 1,551,287 |
| 313 | 60003825 | Valencia Distribution Feeders | - | - | - | - |
| 314 | 60003924 | Manzanita Dist Feeders and Equip | 853,074 | (855,272) | - | - |
| 315 | 60003925 | Sandia Battery Storage 60MW-CO1 | 199,936 | (283,413) | 29 | 29 |
| 316 | 60004025 | BLM_US Forest Service ROW - Dist | 49,335 | - | 49,335 | 49,335 |
| 317 | 60004225 | Distribution Pole Replcmt Prog 2025 | 380,891 | - | 380,891 | 380,891 |
| 318 | 60004321 | Claremont Substation | (7,390) | - | 35,270 | 35,270 |
| 319 | 60004324 | Claremont Substation-Land | 1,270,989 | (1,432,319) | - | - |
| 320 | 60004325 | Zia 46kV Relay Replacement | 2,021,618 | - | 2,021,618 | 2,021,618 |
| 321 | 60004421 | Girard Substation | 10,974 | - | 754,626 | 754,626 |
| 322 | 60004425 | WF Enhanced Sit Awareness Co1 | 864,246 | (856,765) | 7,481 | 7,481 |
| 323 | 60004521 | Montano Substation | 4,761 | - | 243,599 | 243,599 |
| 324 | 60005219 | Manzanita | 299,580 | (588,439) | 110 | 110 |
| 325 | 60005220 | Palomas Station-Distribution | 2,151,430 | - | 7,190,807 | 7,190,807 |
| 326 | 60005240 | Progress 2 Expansion CO1 | 3,390,421 | - | 3,390,421 | 3,390,421 |
| 327 | 60005321 | Dist Relay Replacement 2021-2024 | 144,071 | (103,251) | 74,683 | 74,683 |
| 328 | 60005322 | Morris Substation | 104,634 | - | 1,987,021 | 1,987,021 |
| 329 | 60005324 | Distribution Relay Upgrades | 7,513,624 | (4,058,349) | 6,306,116 | 6,306,116 |
| 330 | 60005327 | Northern Osmose Pole Replacements | 2,811,340 | (1,743,969) | 1,067,371 | 1,067,371 |
| 331 | 60005328 | Snow Vista Unit 2 | - | - | - | - |
| 332 | 60005425 | Wildfire Mitigation 2025-2026 | 4,632,788 | (3,061,636) | 2,183,872 | 2,183,872 |
| 333 | 60005426 | Wildfire Mitigation 2026-2027 | 489,976 | (99,508) | 390,468 | 390,468 |
| 334 | 60005427 | Wildfire Mitigation 2027-2028 | - | - | - | - |
| 335 | 60005428 | Wildfire Mitigation 2028-2029 | - | - | - | - |
| 336 | 60005522 | 33.6MVA Pwr Xfmr Critical Sp 2024 | (1,113,899) | (4,284,115) | - | - |
| 337 | 60005524 | Wildfire Pole Inspect & Treat - CO1 | (381,557) | 381,557 | - | - |

| | A | B | G | H | I | J |
|---|---|---|---|---|---|---|
| 1 | **Public Service Company of New Mexico** | | | | | |
| 2 | **Schedule B-4** | | | | | |
| 3 | **Construction Work In Progress** | | | | | |
| 4 | **Base Period Ending 6/30/2026** | | | | | |
| 5 | **Test Period Ending 9/30/2028** | | | | | |
| 6 | **This schedule is sponsored by PNM Witness Gutierrez** | | | | | |
| 7 | **Project #** | **Project Description** | **Expenditures Through End of Base Period** | **Clearings Through End of Base Period** | **Base Period Ending Balance Jun-26** | **Linkage Beginning Balance Jul-26** |
| 338 | 60005527 | Joint Use 2028 | - | - | - | - |
| 339 | 60005528 | Subtransmission Relay Repl 2029-30 | - | - | - | - |
| 340 | 60005622 | 33.6MVA Pwr Xfmr Critical Sp 2025 | 3,247,120 | (118,673) | 14,288,014 | 14,288,014 |
| 341 | 60005624 | NM Ops Long Lead Equip Blanket CO1 | (2,347,406) | - | 10,468,694 | 10,468,694 |
| 342 | 60005722 | Sky Ranch 1 - Distribution | (92,064) | 91,325 | - | - |
| 343 | 60005726 | Joint Use Make Ready 2026 | 1,042,459 | (546,231) | 496,229 | 496,229 |
| 344 | 60005822 | Menaul Substation | 19,069 | - | 1,172,357 | 1,172,357 |
| 345 | 60005910 | Substation Equipment Replacements B | 2,125,953 | (2,700,833) | 781,936 | 781,936 |
| 346 | 60029905 | Accounting True ups | 2,714,893 | (135,053) | 1,045,868 | 1,045,868 |
| 347 | 60030022 | Spec Equip and Vehicles Co1 | 50,904 | (40,490) | 10,415 | 10,415 |
| 348 | 60030524 | ESC WPM Critical Backup Facility | - | (1,096) | - | - |
| 349 | 60030526 | Las Vegas Office ADA Ramp | 61,809 | - | 61,809 | 61,809 |
| 350 | 60034022 | Fleet Tool Blanket | (36,606) | 37,726 | 1,119 | 1,119 |
| 351 | 89900107 | Line Extensions - Residential | 2,546,360 | (3,170,731) | 482,692 | 482,692 |
| 352 | 89900141 | LINE EXT RESIDENTIAL 2004 | - | - | 34 | 34 |
| 353 | 89900207 | Line Extensions - Commercial | 1,263,434 | (1,408,826) | 93,468 | 93,468 |
| 354 | 89900407 | Line extensions - Misc. | (4,059) | 1,825 | 17,027 | 17,027 |
| 355 | 89900507 | Lighting | - | - | 0 | 0 |
| 356 | 89900607 | Distr. Remove & Replace | 319,076 | (181,051) | 182,891 | 182,891 |
| 357 | 89900707 | Distr. System Improvements | 279,281 | (104,361) | 439,260 | 439,260 |
| 358 | 90000207 | Line Extensions - Commercial | 5,860 | (9,333) | - | - |
| 359 | 90000607 | Distr. Remove & Replace | (1,823) | 1,823 | - | - |
| 360 | 90000707 | Distr. System Improvements | 6,404 | - | 6,404 | 6,404 |
| 361 | 90000807 | Services | 3,126 | (1,956) | 3,126 | 3,126 |
| 362 | ALA15205 | LA LUZ CROSSROADS SUB | - | - | (3,000) | (3,000) |
| 363 | NME40305 | HOLLYWOOD LINE-DIST SUB WORK | - | - | 24,147 | 24,147 |
| 364 | | **Total Distribution** | **310,941,834** | **(293,206,757)** | **188,360,395** | **188,360,395** |
| 365 | | | | | | |
| 366 | | **Transmission** | | | | |
| 367 | 09228224 | Transmission FERC Order 2023 Heatma | 926 | (926) | - | - |

| | A | B | G | H | I | J |
|---|---|---|---|---|---|---|
| 1 | **Public Service Company of New Mexico** | | | | | |
| 2 | **Schedule B-4** | | | | | |
| 3 | **Construction Work In Progress** | | | | | |
| 4 | **Base Period Ending 6/30/2026** | | | | | |
| 5 | **Test Period Ending 9/30/2028** | | | | | |
| 6 | **This schedule is sponsored by PNM Witness Gutierrez** | | | | | |
| 7 | **Project #** | **Project Description** | **Expenditures Through End of Base Period** | **Clearings Through End of Base Period** | **Base Period Ending Balance Jun-26** | **Linkage Beginning Balance Jul-26** |
| 368 | 09228225 | Co2 OT Int Sec Network Monitoring | (2,576) | - | 6 | 6 |
| 369 | 22007021 | Gila National Forest Co02 | 23,140 | - | 187,693 | 187,693 |
| 370 | 22007110 | Misc. 115kv Trans Imp Blanket | - | - | - | - |
| 371 | 22007722 | Alamogordo Substation Co2 | - | - | - | - |
| 372 | 64807018 | UVLS Relay-VT Upg Gavilan-Hollywood | 3,282 | (3,282) | - | - |
| 373 | 64807025 | Leyendecker Substation | 301 | (301) | - | - |
| 374 | 64807040 | Norton Capacitor | 402,463 | (1,697,496) | - | - |
| 375 | 64807126 | State Pen Substation | - | - | - | - |
| 376 | 64807128 | EOL Network Replacements | - | - | - | - |
| 377 | 64807140 | Tribal Fiber-WFF | 3,935 | - | 116,749 | 116,749 |
| 378 | 64807222 | WW Reactor Breaker Replacement | 476,988 | - | 476,988 | 476,988 |
| 379 | 64807225 | Failed Sta Equip Replcmt Progm 2025 | 1,550,271 | (1,484,344) | 750,790 | 750,790 |
| 380 | 64807226 | Rodeo Substation Rebuild CO2 | - | - | - | - |
| 381 | 64807228 | Telecom Flashwave Replace Block 4 | - | - | - | - |
| 382 | 64807319 | North Sub Water Diversion Rtng Wall | 712 | (712) | - | - |
| 383 | 64807321 | System Equipment Upgrade-WFF | (87,841) | - | 156,370 | 156,370 |
| 384 | 64807322 | WFF-Reconfig Tap Sub Unit 2 | (201,792) | - | 1,574,591 | 1,574,591 |
| 385 | 64807325 | Luna GT 2 GSU Transformer CO2 | 51,076 | - | 51,076 | 51,076 |
| 386 | 64807327 | Algodones Control Enclosure | - | - | - | - |
| 387 | 64807328 | OCB Breaker Replacement 2029 | - | - | - | - |
| 388 | 64807420 | Guadalupe 44 MVAR Reactor Regasket | (537) | 537 | - | - |
| 389 | 64807425 | Transmission Pole Replcmt Prog 2025 | 554,502 | - | 554,502 | 554,502 |
| 390 | 64807525 | WF Enhanced Sit Awareness Co2 | 128,946 | (128,946) | - | - |
| 391 | 64807527 | Claremont Building Demolition | - | - | - | - |
| 392 | 64807528 | West Mesa AJ Reactor Replacement | - | - | - | - |
| 393 | 64807542 | SEL Relay Project Block 1 | 6,726 | (18,415) | - | - |
| 394 | 64807625 | FERC-881 AAR | 74,323 | - | 74,323 | 74,323 |
| 395 | 64807626 | YTH Failed Breaker Replacement | 30,458 | - | 30,458 | 30,458 |
| 396 | 64807642 | Guadalupe SVC Backup Generator | 439,959 | - | 1,014,408 | 1,014,408 |
| 397 | 64807919 | Acoma 115kV Tap to BW Line | (25,212) | 25,212 | - | - |

| | A | B | G | H | I | J |
|---|---|---|---|---|---|---|
| 1 | **Public Service Company of New Mexico** | | | | | |
| 2 | **Schedule B-4** | | | | | |
| 3 | **Construction Work In Progress** | | | | | |
| 4 | **Base Period Ending 6/30/2026** | | | | | |
| 5 | **Test Period Ending 9/30/2028** | | | | | |
| 6 | **This schedule is sponsored by PNM Witness Gutierrez** | | | | | |
| 7 | **Project #** | **Project Description** | **Expenditures Through End of Base Period** | **Clearings Through End of Base Period** | **Base Period Ending Balance Jun-26** | **Linkage Beginning Balance Jul-26** |
| 398 | 64807920 | Prosperity Transmission Substation | 8,677 | (8,677) | (0) | (0) |
| 399 | 64808026 | Guadalupe Reactor Replacement | - | - | - | - |
| 400 | 64808126 | Ojo Reactor Replacement | - | - | - | - |
| 401 | 64808422 | Embudo Substation | (18) | (143) | - | - |
| 402 | 64808522 | Tramway Substation | - | - | - | - |
| 403 | 64808723 | Aspen Substation | 15,338 | - | 936,263 | 936,263 |
| 404 | 64808925 | BLM_US Forest Service ROW - Trans | 120,553 | - | 120,553 | 120,553 |
| 405 | 64809026 | Progress 2 Expansion CO2 | - | - | - | - |
| 406 | 64809027 | Hidden Mountain Expansion Mid-State | - | - | - | - |
| 407 | 64809028 | Transmission HFA Relay Replace 2029 | - | - | - | - |
| 408 | 64809120 | SEL Relay Project 2020 | - | - | 0 | 0 |
| 409 | 64809126 | Midstate Reactor Procurement | - | - | - | - |
| 410 | 64809222 | Trans Relay Replacement 2022 | (4) | - | 0 | 0 |
| 411 | 64809324 | Zia and MD1 Control House Replcmt | 1,756,632 | - | 1,756,632 | 1,756,632 |
| 412 | 64809427 | Plus Power Oso Negro | - | - | - | - |
| 413 | 64809527 | Transmission HFA Relay Replace 2027 | - | - | - | - |
| 414 | 64830023 | Spec Equip and Vehicles Co2 | 96,934 | - | 96,934 | 96,934 |
| 415 | 65006010 | San Juan Vail | (138) | 138 | 0 | 0 |
| 416 | 65006110 | ANPP Transmission blanket | 1,843,590 | (125,620) | 2,790,138 | 2,790,138 |
| 417 | 65006210 | SW NM Transmission Blanket | 2,305,939 | (332,349) | 3,877,986 | 3,877,986 |
| 418 | 65007010 | Misc. Station Improvements | 108,647 | (130,281) | 76,413 | 76,413 |
| 419 | 65007047 | WM 115kV Trans | 491,852 | (1,346,637) | 412,687 | 412,687 |
| 420 | 65007048 | Storage for Critical Spares - Power | 2,255 | (12,945) | - | - |
| 421 | 65007050 | RTU Program | 850,956 | (1,363,112) | 240,380 | 240,380 |
| 422 | 65007110 | Misc. Transmission Blanket | 2,473,281 | (1,687,285) | 1,295,997 | 1,295,997 |
| 423 | 65007119 | Asset Health Monitoring_Event Rptg | 12,576 | - | 215,548 | 215,548 |
| 424 | 65007123 | AW 115kV Structure Replace Phase 1 | - | - | - | - |
| 425 | 65007124 | Prager to Richmond Line Upgrade | - | - | - | - |
| 426 | 65007140 | Long Lead Material-WFF | - | - | (0) | (0) |
| 427 | 65007143 | Asset Health Mntrg-Event Rptg 24-28 | 959,405 | (1,721,893) | 141,081 | 141,081 |

| | A | B | G | H | I | J |
|---|---|---|---|---|---|---|
| 1 | **Public Service Company of New Mexico** | | | | | |
| 2 | **Schedule B-4** | | | | | |
| 3 | **Construction Work In Progress** | | | | | |
| 4 | **Base Period Ending 6/30/2026** | | | | | |
| 5 | **Test Period Ending 9/30/2028** | | | | | |
| 6 | **This schedule is sponsored by PNM Witness Gutierrez** | | | | | |
| 7 | **Project #** | **Project Description** | **Expenditures Through End of Base Period** | **Clearings Through End of Base Period** | **Base Period Ending Balance Jun-26** | **Linkage Beginning Balance Jul-26** |
| 428 | 65007150 | Star Light Interconection Expansion | 3,198,203 | - | 3,198,203 | 3,198,203 |
| 429 | 65007219 | New Sandia 115 kV Control House | 493,767 | (367,924) | 2,296,085 | 2,296,085 |
| 430 | 65007223 | TAG Solar and BESS Project | 195,333 | (251,835) | (0) | (0) |
| 431 | 65007224 | EPE EP Line Relay Upgrade | 468,857 | (835,398) | 201 | 201 |
| 432 | 65007226 | Pajarito 345kV Exp-Corazon Intrcnct | 85,116 | - | 85,116 | 85,116 |
| 433 | 65007312 | Reeves-Embudo 115kV Rebuild | - | - | 1,058,087 | 1,058,087 |
| 434 | 65007324 | NTUA Coalmine Metering | 43,991 | (43,991) | - | - |
| 435 | 65007326 | Sunbelt San Juan 345kV Interconnect | 177,678 | - | 177,678 | 177,678 |
| 436 | 65007327 | UNM Transmission Line Relocation | - | - | - | - |
| 437 | 65007424 | Sandia Battery Storage 60MW-CO2 | 8,016,461 | (9,314,972) | 11,923 | 11,923 |
| 438 | 65007626 | TPL1 Breaker Replacements | - | - | - | - |
| 439 | 65007627 | TPL1 P5 Relay Upgrades | 288,099 | - | 288,099 | 288,099 |
| 440 | 65007644 | Transm Comm Improvement 2026-2030 | 98,952 | (28,840) | 70,112 | 70,112 |
| 441 | 65007710 | Switch Stations Replacements IA | 1,264,415 | (675,703) | 1,719,133 | 1,719,133 |
| 442 | 65007713 | Trans Sub Ground Repairs Blanket | - | - | - | - |
| 443 | 65007718 | System Wide Relay Upgrades | 10,107 | (10,107) | (0) | (0) |
| 444 | 65007726 | Ojo ICLSS RAS Relay Additions | 714,393 | (714,393) | - | - |
| 445 | 65007825 | Route 66 Interconnection Expansion | (39,227) | 38,927 | (0) | (0) |
| 446 | 65007826 | Windy Lane Interconnection | 55,168 | - | 55,168 | 55,168 |
| 447 | 65007914 | Relay IA | 525,279 | (412,974) | 211,730 | 211,730 |
| 448 | 65007925 | Quail Ranch Interconnection Exp | (3,584) | 3,584 | (0) | (0) |
| 449 | 65007926 | Fox Tail Interconnection | 321,669 | - | 321,669 | 321,669 |
| 450 | 65008018 | Transmission Communication Improvem | 4,879 | (67,898) | 42,406 | 42,406 |
| 451 | 65008021 | Transm Comm Improvement 2021-2025 | 809,297 | (1,281,953) | 242,935 | 242,935 |
| 452 | 65008026 | Four Mile Mesa Interconnection | 8,828 | - | 8,828 | 8,828 |
| 453 | 65008117 | NERC Physical Security-WFF | (590) | 590 | - | - |
| 454 | 65008125 | Sky Ranch Interconnection Expansion | 5,100 | (5,313) | (0) | (0) |
| 455 | 65008143 | NERC Physical Security 24-28 | 29,413 | (29,439) | - | - |
| 456 | 65008217 | Line Switch Replacement | (143) | 143 | - | - |
| 457 | 65008220 | Sagebrush Station-Transmission | 17,422 | (63,977) | - | - |

| | A | B | G | H | I | J |
|---|---|---|---|---|---|---|
| 1 | **Public Service Company of New Mexico** | | | | | |
| 2 | **Schedule B-4** | | | | | |
| 3 | **Construction Work In Progress** | | | | | |
| 4 | **Base Period Ending 6/30/2026** | | | | | |
| 5 | **Test Period Ending 9/30/2028** | | | | | |
| 6 | **This schedule is sponsored by PNM Witness Gutierrez** | | | | | |
| 7 | **Project #** | **Project Description** | **Expenditures Through End of Base Period** | **Clearings Through End of Base Period** | **Base Period Ending Balance Jun-26** | **Linkage Beginning Balance Jul-26** |
| 458 | 65008225 | Fujitsu Flashware Replacements | 271,235 | (160,400) | 110,835 | 110,835 |
| 459 | 65008315 | Storm Funding Project Co02 | 1,666 | (1,666) | - | - |
| 460 | 65008325 | LANL 115kV Interconnection | 14,249 | - | 14,249 | 14,249 |
| 461 | 65008392 | West Mesa Control House Replacement | 288,482 | (956,990) | 1,113 | 1,113 |
| 462 | 65008425 | Storage for Long Lead Equipment | 988,933 | (984,237) | 4,697 | 4,697 |
| 463 | 65008826 | Alamogordo Land CO2 | 1,005,693 | (1,005,693) | - | - |
| 464 | 65008912 | St Cecilia Station Co2 | (1,626,655) | (198,249) | (0) | (0) |
| 465 | 65008922 | Pajarito-Rio Puerco 345kV ROW | - | - | 654,227 | 654,227 |
| 466 | 65008953 | Guadalupe 72 MVAR Regasket | (847) | 847 | - | - |
| 467 | 65008994 | San Juan Solar | 208,260 | (592,577) | 69,611 | 69,611 |
| 468 | 65008997 | PRC-002 Compliance DFR Project | (633,663) | 633,663 | - | - |
| 469 | 65009007 | NM Ops Long Lead Equipment Blanket | 2,955,578 | 274,974 | 19,045,429 | 19,045,429 |
| 470 | 65009014 | Second 345/115 kV Transformer YTH | (81,490) | 81,490 | - | - |
| 471 | 65009016 | Facebook Phase I-Trans Sys Upgrade | - | - | 0 | 0 |
| 472 | 65009022 | Belen Phase Shifting Transformer | 12,392 | (12,395) | - | - |
| 473 | 65009024 | Belen PST Substation Install | 77,556 | (81,282) | - | - |
| 474 | 65009025 | Pajarito to Rio Puerco 345kV Line | - | - | - | - |
| 475 | 65009027 | Pajarito to Prosperity 345kV Line | - | - | - | - |
| 476 | 65009030 | EP Line Termination | - | - | - | - |
| 477 | 65009040 | Rio Puerco-Sandia Longlead Breakers | 3,207,767 | - | 3,207,767 | 3,207,767 |
| 478 | 65009042 | Desert Station - Transmission | 10,562 | (1,042,150) | - | - |
| 479 | 65009050 | Zia Substation Rebuild CO2 | 164,345 | - | 164,345 | 164,345 |
| 480 | 65009116 | Huning Ranch Expansion | - | - | 72 | 72 |
| 481 | 65009124 | Sol Substation Permanent Power Tran | 4,576 | - | 4,638 | 4,638 |
| 482 | 65009126 | Central 115-12kV Substation Rebuild | - | - | - | - |
| 483 | 65009214 | Sandia 345/115kv Spare Transformer | 3,030 | (3,030) | - | - |
| 484 | 65009223 | Norton-Hernandez 115kV Rebuild | - | - | 818,692 | 818,692 |
| 485 | 65009319 | Palomas Station-Transmission | 664,724 | - | 4,111,516 | 4,111,516 |
| 486 | 65009321 | Project Sky Ranch 1 | 681,383 | (681,754) | - | - |
| 487 | 65009422 | Los Lunas Capacity Expansion | 230,021 | (230,021) | - | - |

| | A | B | G | H | I | J |
|---|---|---|---|---|---|---|
| 1 | **Public Service Company of New Mexico** | | | | | |
| 2 | **Schedule B-4** | | | | | |
| 3 | **Construction Work In Progress** | | | | | |
| 4 | **Base Period Ending 6/30/2026** | | | | | |
| 5 | **Test Period Ending 9/30/2028** | | | | | |
| 6 | **This schedule is sponsored by PNM Witness Gutierrez** | | | | | |
| 7 | **Project #** | **Project Description** | **Expenditures Through End of Base Period** | **Clearings Through End of Base Period** | **Base Period Ending Balance Jun-26** | **Linkage Beginning Balance Jul-26** |
| 488 | 65009424 | Valencia Substation Rebuild - Trans | 8,251,359 | - | 8,775,512 | 8,775,512 |
| 489 | 65009440 | Sun Lasso Interconnection | 222,419 | - | 222,419 | 222,419 |
| 490 | 65009522 | Atrisco Interconnection | 62,213 | (75,478) | - | - |
| 491 | 65009527 | Morrow Phase II | - | - | - | - |
| 492 | 65009540 | Bernalillo Interconnection | 34,627 | - | 34,627 | 34,627 |
| 493 | 65009640 | Mesa del Sol Infrastructure CO2 | 690,437 | - | 690,437 | 690,437 |
| 494 | 65009722 | Belen-Sun Ranch 115kV Rebuild | - | - | 1,287,188 | 1,287,188 |
| 495 | 65009725 | Broken equipment replacement fund | - | - | - | - |
| 496 | 65009727 | Pinyon Park | - | - | - | - |
| 497 | 65009740 | Westpointe Substation-TRN | 1,699,944 | - | 1,699,944 | 1,699,944 |
| 498 | 65009823 | Person-Kirtland Switching 115kV Reb | - | - | 1,489,684 | 1,489,684 |
| 499 | 65009925 | Transmission Line Pole Replcmt 2025 | - | - | - | - |
| 500 | 65009926 | Los Lunas Capacity Expansion Phse 5 | 10,841,184 | - | 11,075,043 | 11,075,043 |
| 501 | 65009950 | Los Lunas Capacity Expansion Phase4 | 13,558,337 | (100,534,436) | 52,993 | 52,993 |
| 502 | 65028026 | NM Wholesale MV90 Upgrade 2026 | 146,774 | (146,684) | 89 | 89 |
| 503 | 65028040 | FERC 881 | 350,576 | (1,221,628) | 205,376 | 205,376 |
| 504 | 65028125 | Comm Improvements Software | 262,397 | (262,397) | - | - |
| 505 | 65028126 | NERC PRC-027 CORE Software | - | - | - | - |
| 506 | 65029905 | Accounting True ups | 1,864,285 | (93,517) | - | - |
| 507 | 65030610 | Communications Equipment-blanket | 57,240 | (53,681) | 29,253 | 29,253 |
| 508 | 65031922 | Gen Svcs Bldg Maint Blanket-Trans | 513,297 | (513,297) | - | - |
| 509 | 65034010 | Co2 Tools & Equipment | 128,570 | (49,655) | 78,915 | 78,915 |
| 510 | 65034012 | TECH SERVICE TRANSMISSION TOOLS | 113,004 | (139,848) | 27,440 | 27,440 |
| 511 | 67607026 | San Juan Control House Improvements | - | - | - | - |
| 512 | 67607625 | San Juan Stn Switchgear Replacement | 427,498 | (407,247) | 20,251 | 20,251 |
| 513 | 67607626 | San Juan 345kV Live Tank Breakers | - | - | - | - |
| 514 | 67607640 | SJ Lightning and Backup Power 26-01 | - | - | - | - |
| 515 | 67607641 | SJ Switchyard Capital 26-02 | - | - | - | - |
| 516 | | **Total Transmission** | **78,937,369** | **(132,556,285)** | **80,632,303** | **80,632,303** |
| 517 | | | | | | |

| | A | B | G | H | I | J |
|---|---|---|---|---|---|---|
| 1 | **Public Service Company of New Mexico** | | | | | |
| 2 | **Schedule B-4** | | | | | |
| 3 | **Construction Work In Progress** | | | | | |
| 4 | **Base Period Ending 6/30/2026** | | | | | |
| 5 | **Test Period Ending 9/30/2028** | | | | | |
| 6 | **This schedule is sponsored by PNM Witness Gutierrez** | | | | | |
| 7 | **Project #** | **Project Description** | **Expenditures Through End of Base Period** | **Clearings Through End of Base Period** | **Base Period Ending Balance Jun-26** | **Linkage Beginning Balance Jul-26** |
| 518 | | **Afton** | | | | |
| 519 | 70716025 | Afton Heat Exchanger Coil Repl | 3,704 | (167,065) | - | - |
| 520 | 70716030 | Afton Compressor Upgrade Pkg 3 2028 | - | - | - | - |
| 521 | 70716043 | Afton Steam Turbine Major Inspectn | 450,855 | (450,855) | - | - |
| 522 | 70716325 | Afton High Energy Pipe Repl HRH | 9,619 | (854,680) | - | - |
| 523 | 70716425 | Afton HRSG Lower Penetration Seal | 5,075 | (171,902) | - | - |
| 524 | 70716440 | Afton ST Generator Exciter Rewind | 644,090 | (644,090) | - | - |
| 525 | 70716724 | Afton CT Generator/Rotor Fld Rplcmt | 33,259 | (33,259) | - | - |
| 526 | 70716826 | SCR Catalyst Replacement | - | - | - | - |
| 527 | 70716926 | Afton LCI Exciter Transformer | 1,619 | - | 1,619 | 1,619 |
| 528 | 70717126 | Afton 52 Line Breaker Relays Repl | - | - | - | - |
| 529 | 70717424 | Afton Non Outage Plant Capital 2024 | 558 | - | 124,691 | 124,691 |
| 530 | 70717425 | Afton Non Outage Plant Capital 2025 | 60,651 | (59,880) | 60,317 | 60,317 |
| 531 | 70717426 | Afton Non Outage Plant Capital 2026 | 306,781 | (133,642) | 173,138 | 173,138 |
| 532 | 70717427 | Afton Non Outage Plant Capital 2027 | - | - | - | - |
| 533 | 70717428 | Afton Non Outage Plant Capital 2028 | - | - | - | - |
| 534 | 70717525 | Afton Outage Plant Capital 2025 | 242 | - | 4,145 | 4,145 |
| 535 | 70717526 | Afton Outage Plant Capital 2026 | 320,810 | (218,116) | 102,695 | 102,695 |
| 536 | 70717527 | Afton Outage Plant Capital 2027 | - | - | - | - |
| 537 | 70717528 | Afton Outage Plant Capital 2028 | - | - | - | - |
| 538 | 70717925 | Afton ST Generator Rewedge | 492,519 | (1,428,494) | 104 | 104 |
| 539 | 70718026 | AFT Gas Turbine Major | - | - | - | - |
| 540 | 70728025 | Afton Oper Tech Projects 2025 | 61,201 | (61,201) | - | - |
| 541 | | **Total Afton** | **2,390,982** | **(4,223,182)** | **466,709** | **466,709** |
| 542 | | | | | | |
| 543 | | **Lordsburg** | | | | |
| 544 | 70316025 | Lordsburg Capital Improvements 2025 | 1,086 | (45,833) | - | - |
| 545 | 70316028 | Lordsburg Non Outage Plant Cap 2028 | - | - | - | - |
| 546 | 70316124 | Lordsburg RO &Evaporation Pond | 2,164,286 | (6,036,238) | 100,999 | 100,999 |
| 547 | 70316126 | Lordsburg U1 Depot Visit | - | - | - | - |

| | A | B | G | H | I | J |
|---|---|---|---|---|---|---|
| 1 | **Public Service Company of New Mexico** | | | | | |
| 2 | **Schedule B-4** | | | | | |
| 3 | **Construction Work In Progress** | | | | | |
| 4 | **Base Period Ending 6/30/2026** | | | | | |
| 5 | **Test Period Ending 9/30/2028** | | | | | |
| 6 | **This schedule is sponsored by PNM Witness Gutierrez** | | | | | |
| 7 | **Project #** | **Project Description** | **Expenditures Through End of Base Period** | **Clearings Through End of Base Period** | **Base Period Ending Balance Jun-26** | **Linkage Beginning Balance Jul-26** |
| 548 | 70316325 | Lordsburg U2 Depot Visit | 1,833,218 | - | 1,833,218 | 1,833,218 |
| 549 | 70316527 | Lordsburg Cap Planned Outage 2027 | - | - | - | - |
| 550 | | **Total Lordsburg** | **3,998,590** | **(6,082,071)** | **1,934,217** | **1,934,217** |
| 551 | | | | | | |
| 552 | | **Reeves** | | | | |
| 553 | 71316027 | Reeves U2 Step Up Transformer 2029 | - | - | - | - |
| 554 | 71316028 | Reeves U1 Step Up Transformer 2030 | - | - | - | - |
| 555 | 71316124 | Reeves U3 Boiler Waterwall Repl | 264,356 | (264,356) | - | - |
| 556 | 71316127 | Reeves U3 Boiler Economizers 2028 | - | - | - | - |
| 557 | 71316424 | Reeves Non Outage Plant Cap 2024 | 320 | (6,771) | 45,209 | 45,209 |
| 558 | 71316425 | Reeves Non Outage Plant Cap 2025 | 975 | (27,695) | - | - |
| 559 | 71316426 | Reeves Non Outage Plant Cap 2026 | 18,732 | - | 18,732 | 18,732 |
| 560 | 71316427 | Reeves Non Outage Plant Cap 2027 | - | - | - | - |
| 561 | 71316428 | Reeves Non Outage Plant Cap 2028 | - | - | - | - |
| 562 | 71316525 | Reeves Outage Plant Capital 2025 | (50,654) | (51,231) | - | - |
| 563 | 71316526 | Reeves Outage Plant Capital 2026 | 567,506 | - | 567,506 | 567,506 |
| 564 | 71316527 | Reeves Outage Plant Capital 2027 | - | - | - | - |
| 565 | 71316528 | Reeves Outage Plant Capital 2028 | - | - | - | - |
| 566 | 71316624 | Reeves U3 Turbine Generator Outage | 925,522 | (3,740,863) | 12,525 | 12,525 |
| 567 | 71316626 | Reeves U2 Auxiliary Transformer | 1,027,818 | - | 1,027,818 | 1,027,818 |
| 568 | 71316813 | Unit 1 Superheater replacement | - | - | (1,077) | (1,077) |
| 569 | 71316925 | Reeves U3 Generator Exciter Contrlr | 312,085 | (325,911) | 2,091 | 2,091 |
| 570 | | **Total Reeves** | **3,066,659** | **(4,416,827)** | **1,672,802** | **1,672,802** |
| 571 | | | | | | |
| 572 | | **Four Corners** | | | | |
| 573 | 71519017 | Four Corners Facility Improvements | 6,536,472 | (2,973,567) | 6,787,073 | 6,787,073 |
| 574 | 71519117 | Four Corners Facility - Switchyard | 90,517 | (58,489) | 211,305 | 211,305 |
| 575 | 71519208 | Four Corners Facility Improvements | - | - | (744) | (744) |
| 576 | 71519209 | Four Corners Facility Improvements | - | - | (3,048) | (3,048) |
| 577 | 71519210 | Four Corners Facility Improvements | (4,220) | - | 243,259 | 243,259 |

| | A | B | G | H | I | J |
|---|---|---|---|---|---|---|
| 1 | **Public Service Company of New Mexico** | | | | | |
| 2 | **Schedule B-4** | | | | | |
| 3 | **Construction Work In Progress** | | | | | |
| 4 | **Base Period Ending 6/30/2026** | | | | | |
| 5 | **Test Period Ending 9/30/2028** | | | | | |
| 6 | **This schedule is sponsored by PNM Witness Gutierrez** | | | | | |
| 7 | **Project #** | **Project Description** | **Expenditures Through End of Base Period** | **Clearings Through End of Base Period** | **Base Period Ending Balance Jun-26** | **Linkage Beginning Balance Jul-26** |
| 578 | | **Total Four Corners** | **6,622,769** | **(3,032,056)** | **7,237,844** | **7,237,844** |
| 579 | | | | | | |
| 580 | | **Palo Verde 1&2** | | | | |
| 581 | 72123410 | PV U1 | 867,793 | (1,559,989) | 1,377,673 | 1,377,673 |
| 582 | 72223410 | PV U2 | 5,074,844 | (335,014) | 6,954,697 | 6,954,697 |
| 583 | | **Total Palo Verde 1&2** | **5,942,637** | **(1,895,003)** | **8,332,369** | **8,332,369** |
| 584 | | | | | | |
| 585 | | **Palo Verde 3** | | | | |
| 586 | 72323410 | PV U3 | 15,380,922 | (20,138,787) | 4,021,049 | 4,021,049 |
| 587 | | **Total Palo Verde 3** | **15,380,922** | **(20,138,787)** | **4,021,049** | **4,021,049** |
| 588 | | | | | | |
| 589 | | **Palo Verde Common** | | | | |
| 590 | 72423410 | PV common | 5,187,914 | (4,713,373) | 13,005,889 | 13,005,889 |
| 591 | 72523410 | PV water reclamation | 1,150,563 | 125,017 | 2,151,441 | 2,151,441 |
| 592 | | **Total Palo Verde Common** | **6,338,477** | **(4,588,355)** | **15,157,330** | **15,157,330** |
| 593 | | | | | | |
| 594 | | **Luna** | | | | |
| 595 | 74416021 | Luna Capital Improvements 2021 | - | - | 62,827 | 62,827 |
| 596 | 74416024 | Luna GT1 Flexibility Upgrade | (221,961) | 221,961 | - | - |
| 597 | 74416025 | Luna Capital Improvements 2025 | 109,424 | (184,898) | - | - |
| 598 | 74416026 | Luna Capital Improvements 2024 | (397) | (23,856) | - | - |
| 599 | 74416027 | Luna Capital Planned Outage 2027 | - | - | - | - |
| 600 | 74416028 | Luna Capital Improvements 2028 | - | - | - | - |
| 601 | 74416126 | Luna Capital Improvements 2026 | 342,715 | (94,991) | 247,724 | 247,724 |
| 602 | 74416127 | Luna Capital Improvement 2027 | - | - | - | - |
| 603 | 74416128 | Luna Capital Planned Outage 2028 | - | - | - | - |
| 604 | 74416415 | Luna Capital Improvements 2019 | (3) | 3 | - | - |
| 605 | 74417021 | Luna Capital Planned Outage 2021 | - | - | (64,075) | (64,075) |
| 606 | 74417024 | Luna Capital Planned Outage 2024 | - | (77,140) | - | - |
| 607 | 74417025 | Luna Capital Planned Outage 2025 | 373,946 | (1,067,061) | 45,449 | 45,449 |

| | A | B | G | H | I | J |
|---|---|---|---|---|---|---|
| 1 | **Public Service Company of New Mexico** | | | | | |
| 2 | **Schedule B-4** | | | | | |
| 3 | **Construction Work In Progress** | | | | | |
| 4 | **Base Period Ending 6/30/2026** | | | | | |
| 5 | **Test Period Ending 9/30/2028** | | | | | |
| 6 | **This schedule is sponsored by PNM Witness Gutierrez** | | | | | |
| 7 | **Project #** | **Project Description** | **Expenditures Through End of Base Period** | **Clearings Through End of Base Period** | **Base Period Ending Balance Jun-26** | **Linkage Beginning Balance Jul-26** |
| 608 | 74417123 | Luna Capital Planned Outage 2023 | (1,629) | (16,481) | - | - |
| 609 | 74417125 | Luna GT 2 GSU Transformer Replaceme | 801,529 | - | 1,529,980 | 1,529,980 |
| 610 | 74417126 | Luna Capital Planned Outage 2026 | 506,329 | (185,757) | 320,572 | 320,572 |
| 611 | 74418029 | Luna GT1 Hot Gas Path Inspection | - | - | - | - |
| 612 | | **Total Luna** | **1,909,952** | **(1,428,218)** | **2,142,476** | **2,142,476** |
| 613 | | | | | | |
| 614 | | **San Juan** | - | - | | |
| 615 | 76116001 | CBI SJ GEN ENGR FORECAST | - | - | (0) | (0) |
| 616 | 76116011 | CBI SJ GEN ENGR | - | - | 0 | 0 |
| 617 | 76616025 | Common Limestone Area Instrument | - | - | (399) | (399) |
| 618 | 76616029 | Common Brine Concentrator 4 Pipe Re | - | - | (2,442) | (2,442) |
| 619 | 76616311 | sj com pi data historian | - | - | (82) | (82) |
| 620 | 78916224 | SJGS Process Pond Closures | 3 | - | 3 | 3 |
| 621 | | **Total San Juan** | **3** | **-** | **(2,920)** | **(2,920)** |
| 622 | | | | | | |
| 623 | | **La Luz/Peaking Generation Station** | | | | |
| 624 | 75216126 | La Luz SB-310 Compressor Blade Repl | - | - | - | - |
| 625 | 75216221 | La Luz Spare GSU Transformer | 156,359 | - | 929,869 | 929,869 |
| 626 | 75216425 | La Luz Non Outage Plant Capitl 2025 | 80,847 | (47,212) | 33,635 | 33,635 |
| 627 | 75216427 | La Luz Non Outage Plant Capitl 2027 | - | - | - | - |
| 628 | 75216428 | La Luz Non Outage Plant Capitl 2028 | - | - | - | - |
| 629 | 75216625 | La Luz Mark VI E Turbine Controls | 658,366 | - | 658,366 | 658,366 |
| 630 | 75216627 | La Luz Outage Plant Capital 2027 | - | - | - | - |
| 631 | 75216725 | La Luz Balance of Plant Controls | 676,623 | - | 676,623 | 676,623 |
| 632 | 75228025 | La Luz Oper Tech Projects 2025 | 89,328 | - | 89,328 | 89,328 |
| 633 | | **Total La Luz/Peaking Generation Station** | **1,661,522** | **(47,212)** | **2,387,821** | **2,387,821** |
| 634 | | | | | | |
| 635 | | **Delta/Rio Bravo** | | | | |
| 636 | 04616027 | Rio Bravo Mark VI E Turbine Control | 7,703 | - | 7,703 | 7,703 |
| 637 | 04616127 | Rio Bravo Balance of Plant Controls | 14,646 | - | 14,646 | 14,646 |

| | A | B | G | H | I | J |
|---|---|---|---|---|---|---|
| 1 | **Public Service Company of New Mexico** | | | | | |
| 2 | **Schedule B-4** | | | | | |
| 3 | **Construction Work In Progress** | | | | | |
| 4 | **Base Period Ending 6/30/2026** | | | | | |
| 5 | **Test Period Ending 9/30/2028** | | | | | |
| 6 | **This schedule is sponsored by PNM Witness Gutierrez** | | | | | |
| 7 | **Project #** | **Project Description** | **Expenditures Through End of Base Period** | **Clearings Through End of Base Period** | **Base Period Ending Balance Jun-26** | **Linkage Beginning Balance Jul-26** |
| 638 | 04616227 | Rio Bravo Turbine Major 2029 | - | - | - | - |
| 639 | 04616327 | Rio Bravo Compressor Upgrade Pkg 3 | - | - | - | - |
| 640 | 04616425 | Rio Bravo Non Outage Plant Cap 2025 | 85,651 | (85,651) | - | - |
| 641 | 04616427 | Rio Bravo Non Outage Plant Cap 2027 | - | - | - | - |
| 642 | 04616428 | Rio Bravo Non Outage Plant Cap 2028 | - | - | - | - |
| 643 | 04616524 | Rio Bravo Outage Plant Capital 2024 | 138,404 | (166,117) | 2,020 | 2,020 |
| 644 | 04616525 | Rio Bravo Outage Plant Capital 2025 | 81,658 | - | 81,658 | 81,658 |
| 645 | 04616527 | Rio Bravo Outage Plant Capital 2027 | - | - | - | - |
| 646 | 04616528 | Rio Bravo Outage Plant Capital 2028 | - | - | - | - |
| 647 | 04616725 | Rio Bravo Emergency Hot Gas Path | 544,022 | (544,022) | - | - |
| 648 | 04628024 | Rio Bravo Oper Tech Projects 2024 | 20,514 | (20,514) | - | - |
| 649 | 04630525 | Rio Bravo Sfty Secrity Faclity 2025 | 32,663 | (32,663) | - | - |
| 650 | | **Total Delta/Rio Bravo** | **925,261** | **(848,967)** | **106,026** | **106,026** |
| 651 | | | | | | |
| 652 | | **Bulk Power Building Allocation** | | | | |
| 653 | 35730525 | WPM Plumbing Improvement | 241,057 | (241,057) | - | - |
| 654 | 35730526 | 2026 Aztec Building A Contingency | - | - | - | - |
| 655 | 35730527 | 2027 Aztec Building A Contingency | - | - | - | - |
| 656 | 35730528 | 2028 Aztec Building A Contingency | - | - | - | - |
| 657 | 35730924 | Gen Svcs Bldg Maint Aztec Bldg A | 838 | (838) | - | - |
| 658 | 35730925 | 25-01 Aztec Building A Contingency | 30,543 | (30,543) | - | - |
| 659 | 35732012 | Aztec Building renovations | - | - | (716) | (716) |
| 660 | 35732026 | Aztec A 2nd Floor Workstations | - | - | - | - |
| 661 | | **Total Bulk Power Building Allocation** | **272,437** | **(272,437)** | **(716)** | **(716)** |
| 662 | | | | | | |
| 663 | | **Battery Storage** | | | | |
| 664 | 70518222 | Dist Battery Capacity Expand Phs I | (104,004) | (706,290) | 1,662 | 1,662 |
| 665 | 70518223 | Dist Battery Capacity Expand Phs 2 | - | - | - | - |
| 666 | 70518224 | Sandia Battery Storage 60MW | 103,300,823 | (123,158,752) | 6,677,613 | 6,677,613 |
| 667 | 70518526 | Sunbelt Solar and Storage Facility | 55,157,621 | - | 55,157,621 | 55,157,621 |

| | A | B | G | H | I | J |
|---|---|---|---|---|---|---|
| 1 | **Public Service Company of New Mexico** | | | | | |
| 2 | **Schedule B-4** | | | | | |
| 3 | **Construction Work In Progress** | | | | | |
| 4 | **Base Period Ending 6/30/2026** | | | | | |
| 5 | **Test Period Ending 9/30/2028** | | | | | |
| 6 | **This schedule is sponsored by PNM Witness Gutierrez** | | | | | |
| 7 | **Project #** | **Project Description** | **Expenditures Through End of Base Period** | **Clearings Through End of Base Period** | **Base Period Ending Balance Jun-26** | **Linkage Beginning Balance Jul-26** |
| 668 | 70528028 | Tech Doc Management 2028 | - | - | - | - |
| 669 | | **Total Battery Storage** | **158,354,440** | **(123,865,042)** | **61,836,897** | **61,836,897** |
| 670 | | | | | | |
| 671 | | **Production Related** | | | | |
| 672 | 09328022 | ETRM Upgrade or Replace 2023 | 182,377 | (723,887) | - | - |
| 673 | 09328026 | ETRM Data Svcs Implement 2026 | 89,570 | - | 89,570 | 89,570 |
| 674 | 09328122 | Co 3 - CPR Corp Security 2022 | - | (7,763) | - | - |
| 675 | 70028023 | Enterprise Investmt Optimztn Softwr | (75,323) | 75,323 | (0) | (0) |
| 676 | 70028025 | Enterprise Investment Optimization | 2,597,468 | (4,086,390) | - | - |
| 677 | 70028028 | Port Opt Copperleaf 2028 | - | - | - | - |
| 678 | 70028125 | Wildfire PSPS Decision Making | - | - | - | - |
| 679 | 70028224 | Documentation System Upgrades | 477,400 | (1,530,310) | - | - |
| 680 | 70028225 | Port Opt Copperleaf 2025 | 3,601,262 | (3,601,262) | - | - |
| 681 | 70028227 | Data Historian SoftwareLicense 2027 | - | - | - | - |
| 682 | 70028327 | Adv Analytics Process Mgmt SEEQ 27 | - | - | - | - |
| 683 | 70028524 | Arrows DOE Phase 1 | 62,524 | (297,622) | - | - |
| 684 | 70029905 | Accounting True ups | 298,858 | (298,858) | - | - |
| 685 | 73128224 | Extended Day Ahead Market-EDAM 2025 | 4,643,175 | - | 4,643,175 | 4,643,175 |
| 686 | 73128324 | GHG Cost to Bidding and GenTrader | 2,389 | (143,910) | - | - |
| 687 | | **Total Production Related** | **11,879,700** | **(10,614,678)** | **4,732,746** | **4,732,746** |
| 688 | | | | | | |
| 689 | | Undistributed Balances-184 Clearing Account | 3,240,396 | - | 18,332,977 | 18,332,977 |
| 690 | | Retirement Work in Progress-108 Account | 14,627,001 | (20,692,244) | 30,538,351 | 30,538,351 |
| 691 | | | | | | |
| 692 | | **Total PNM** | **626,490,951** | **(627,908,122)** | **427,888,675** | **427,888,675** |
| 693 | | Plant additions not in CWIP: | | | | |
| 694 | | ARO Asset Four Corners (FERC 317) | | (2,808,022) | | |
| 695 | | ARO Asset Lordsburg (FERC 347) | | (3,418,126) | | |
| 696 | | Less CWIP Clearings to Account 105100: | | | | |
| 697 | | New Sandia 115 kV Control House | | 367,924 | | |

| | A | B | G | H | I | J |
|---|---|---|---|---|---|---|
| 1 | **Public Service Company of New Mexico** | | | | | |
| 2 | **Schedule B-4** | | | | | |
| 3 | **Construction Work In Progress** | | | | | |
| 4 | **Base Period Ending 6/30/2026** | | | | | |
| 5 | **Test Period Ending 9/30/2028** | | | | | |
| 6 | **This schedule is sponsored by PNM Witness Gutierrez** | | | | | |
| 7 | **Project #** | **Project Description** | **Expenditures Through End of Base Period** | **Clearings Through End of Base Period** | **Base Period Ending Balance Jun-26** | **Linkage Beginning Balance Jul-26** |
| 698 | | West Mesa Control House Replacement | | 1,346,637 | | |
| 699 | | Less CWIP Clearings Deferred to a Future Rate Case | | | | |
| 700 | | Mesa Del Sol Infrastructure Projects | | | | |
| 701 | | Grid Mod - Dist Planning & Engineer | | | | |
| 702 | | Less Retirement Work in Progress-108 Account | | 20,692,244 | | |
| 703 | | **Schedule B-1 Total Plant in Service - PNM Additions** | | **(611,727,465)** | | |
| 704 | | | | | | |
| 705 | | **Corporate** | | | | |
| 706 | 91128024 | Strategic Finance Replacement | 420,197 | (1,334,932) | - | - |
| 707 | 91128027 | PowerPlan Upg or Replace 2028 | - | - | - | - |
| 708 | 91128028 | MV90 Retail Upg 2028 | - | - | - | - |
| 709 | 91128125 | PowerPlan Upgrade 2025 | 1,703,395 | (3,422,920) | - | - |
| 710 | 91128325 | Treasury Management System | 378,628 | - | 378,628 | 378,628 |
| 711 | 91128525 | PowerPlan Licensing Uplift 2025 | 487,196 | (487,196) | - | - |
| 712 | 94128026 | NERC CIP Program-2026 | - | - | - | - |
| 713 | 94128120 | ArcFM Upgrade to Utility Network | 3,010,630 | (2,458,336) | 1,831,480 | 1,831,480 |
| 714 | 94128225 | OT Int. Sec. Network Monitoring | 59,223 | (862,077) | - | - |
| 715 | 94128325 | Fortress ELA 2025 | (20,740) | (421,047) | - | - |
| 716 | 94128328 | NERC CIP GRC ELA 2028 | - | - | - | - |
| 717 | 94128343 | Transient Cyber Assets Upgrade | (2,628) | 2,628 | - | - |
| 718 | 94128425 | NERC GRC Software 2025 | 518,196 | - | 518,196 | 518,196 |
| 719 | 94128525 | Esri ELA 2025 | 818,740 | (818,740) | - | - |
| 720 | 94128528 | Fortra FIM Tripwire ELA 2028 | - | - | - | - |
| 721 | 94130522 | Santa Fe Office Parking Lot | (1,140) | - | - | - |
| 722 | 95128124 | OT Display Wall Upg 2024 | 2 | (2) | - | - |
| 723 | 95128127 | ColdFusion Upg 2027 | - | - | - | - |
| 724 | 95128144 | CPR OT Assets Annual Refresh 2024 | 48 | (49) | (0) | (0) |
| 725 | 95128145 | CPR OT Assets Annual Refresh 2025 | 588,876 | (590,808) | - | - |
| 726 | 95128146 | CPR OT Assets Annual Refresh 2026 | 415,492 | - | 415,492 | 415,492 |
| 727 | 95128147 | CPR OT Assets Annual Refresh 2027 | - | - | - | - |

| | A | B | G | H | I | J |
|---|---|---|---|---|---|---|
| 1 | **Public Service Company of New Mexico** | | | | | |
| 2 | **Schedule B-4** | | | | | |
| 3 | **Construction Work In Progress** | | | | | |
| 4 | **Base Period Ending 6/30/2026** | | | | | |
| 5 | **Test Period Ending 9/30/2028** | | | | | |
| 6 | **This schedule is sponsored by PNM Witness Gutierrez** | | | | | |
| 7 | **Project #** | **Project Description** | **Expenditures Through End of Base Period** | **Clearings Through End of Base Period** | **Base Period Ending Balance Jun-26** | **Linkage Beginning Balance Jul-26** |
| 728 | 95128148 | CPR OT Assets Annual Refresh 2028 | - | - | - | - |
| 729 | 96828045 | KnowBe4 ELA 2025-2028 | 132,606 | (132,606) | - | - |
| 730 | 96828046 | ZenGRC ELA 2026 | 224,016 | - | 224,016 | 224,016 |
| 731 | 96828047 | IBM DataStage ETL Upg 2027 | - | - | - | - |
| 732 | 96828055 | Dataminr Phys Sec ELA 2025 | 304,229 | (304,229) | - | - |
| 733 | 96828057 | 3rd Party Risk Mgmt Ph 1 2027 | - | - | - | - |
| 734 | 96828058 | Arctic Wolf ELA 2028 | - | - | - | - |
| 735 | 96828066 | CrowdStrike ELA 2026 | - | - | - | - |
| 736 | 96828067 | Segmentation Network and ACI 2027 | - | - | - | - |
| 737 | 96828068 | Privileged Access Mgmt ELA 2028 | - | - | - | - |
| 738 | 96828086 | Network Access Control (NAC) 2026 | - | - | - | - |
| 739 | 96828123 | MS Enterprise License Agrmt 2023 | 488,315 | (488,315) | - | - |
| 740 | 96828145 | Corporate Applications Prog 2025 | 614,559 | (671,089) | 222,793 | 222,793 |
| 741 | 96828155 | Tripwire ELA 2025 | 966,981 | (966,981) | - | - |
| 742 | 96828157 | AI Detect and Correl Ph 1 2027 | - | - | - | - |
| 743 | 96828165 | VMWare Virtual Desk & App ELA 2025 | 992,073 | (992,073) | - | - |
| 744 | 96828167 | Segmentation NSX 2027 | - | - | - | - |
| 745 | 96828185 | Web Application Modernization 2025 | 223,652 | (252,344) | - | - |
| 746 | 96828224 | MS SharePoint Upgrade 2025 | 375,607 | (375,607) | - | - |
| 747 | 96828226 | MS Enterprise License Agrmt 2026 | 9,268,491 | (9,268,491) | - | - |
| 748 | 96828228 | CISCO SmartNet (HW) ELA 2028 | - | - | - | - |
| 749 | 96828247 | Disaster Recovery Refresh (HW) 2027 | - | - | - | - |
| 750 | 96828255 | Blackbaud ELA 2025 | 97,046 | (97,046) | - | - |
| 751 | 96828256 | Tenable ELA 2026 | 421,611 | (421,611) | - | - |
| 752 | 96828257 | Agentic AI SOC 2027 | - | - | - | - |
| 753 | 96828263 | Disaster Recover Refr (HW) | 596 | (33,528) | - | - |
| 754 | 96828267 | VMware vRealize ELA 2027 | - | - | - | - |
| 755 | 96828285 | CyberArk PAM Upgrade | 593,815 | (593,815) | - | - |
| 756 | 96828286 | Security Mitigation Program 2026 | 1,094,203 | - | 1,094,203 | 1,094,203 |
| 757 | 96828346 | Corporate Applications Prog 2026 | 206,061 | - | 206,061 | 206,061 |

| | A | B | G | H | I | J |
|---|---|---|---|---|---|---|
| 1 | **Public Service Company of New Mexico** | | | | | |
| 2 | **Schedule B-4** | | | | | |
| 3 | **Construction Work In Progress** | | | | | |
| 4 | **Base Period Ending 6/30/2026** | | | | | |
| 5 | **Test Period Ending 9/30/2028** | | | | | |
| 6 | **This schedule is sponsored by PNM Witness Gutierrez** | | | | | |
| 7 | **Project #** | **Project Description** | **Expenditures Through End of Base Period** | **Clearings Through End of Base Period** | **Base Period Ending Balance Jun-26** | **Linkage Beginning Balance Jul-26** |
| 758 | 96828347 | Corporate Applications Prog 2027 | - | - | - | - |
| 759 | 96828357 | CUCM Upgrade 2027 | - | - | - | - |
| 760 | 96828367 | Service Suite Upg 2027 | - | - | - | - |
| 761 | 96828385 | Oracle ELA and Azure Cloud 2025 | 11,486,692 | (11,486,692) | - | - |
| 762 | 96828386 | AI Program 2026 | 415,246 | (380,579) | 34,667 | 34,667 |
| 763 | 96828387 | AI Program 2027 | - | - | - | - |
| 764 | 96828388 | AI Program 2028 | - | - | - | - |
| 765 | 96828425 | CPR Servers Storage 2025 | 1,013,606 | (2,163,094) | 28,000 | 28,000 |
| 766 | 96828426 | CPR Servers Storage 2026 | 218,917 | - | 218,917 | 218,917 |
| 767 | 96828427 | CPR Servers Storage 2027 | - | - | - | - |
| 768 | 96828428 | CPR Servers Storage 2028 | - | - | - | - |
| 769 | 96828452 | Dense Wavelength Div Multi (DWDM) | 1,818 | (1,818) | - | - |
| 770 | 96828457 | DC OS Lifecycle Mgmt 2027 | - | - | - | - |
| 771 | 96828485 | Gigamon ELA 2025 - 2028 | 222,264 | (222,264) | - | - |
| 772 | 96828486 | Oracle Java License True Up 2026 | 724,193 | (724,193) | - | - |
| 773 | 96828524 | CPR PCs 2024 | (1,306) | 1,306 | - | - |
| 774 | 96828525 | CPR PCs 2025 | 1,421,658 | (2,164,026) | (3) | (3) |
| 775 | 96828526 | CPR PCs 2026 | 1,653,590 | - | 1,653,590 | 1,653,590 |
| 776 | 96828527 | CPR PCs 2027 | - | - | - | - |
| 777 | 96828528 | CPR PCs 2028 | - | - | - | - |
| 778 | 96828548 | Dark Trace ELA 2028 | - | - | - | - |
| 779 | 96828567 | Shadow IT Alerting and ID Ph 1 2027 | - | - | - | - |
| 780 | 96828585 | Netwrix ELA 2026 | 184,175 | (184,175) | - | - |
| 781 | 96828645 | CPR Cybersecurity 2025 | 534,728 | (537,267) | - | - |
| 782 | 96828646 | CPR Cybersecurity 2026 | 1,102,294 | - | 1,102,294 | 1,102,294 |
| 783 | 96828647 | CPR Cybersecurity 2027 | - | - | - | - |
| 784 | 96828648 | CPR Cybersecurity 2028 | - | - | - | - |
| 785 | 96828657 | DC Storage Backup Modern 2027 | - | - | - | - |
| 786 | 96828666 | Dataminr Cyber ELA 2026 | - | - | - | - |
| 787 | 96828667 | System Process App Seg Ph 1 2027 | - | - | - | - |

| | A | B | G | H | I | J |
|---|---|---|---|---|---|---|
| 1 | **Public Service Company of New Mexico** | | | | | |
| 2 | **Schedule B-4** | | | | | |
| 3 | **Construction Work In Progress** | | | | | |
| 4 | **Base Period Ending 6/30/2026** | | | | | |
| 5 | **Test Period Ending 9/30/2028** | | | | | |
| 6 | **This schedule is sponsored by PNM Witness Gutierrez** | | | | | |
| 7 | **Project #** | **Project Description** | **Expenditures Through End of Base Period** | **Clearings Through End of Base Period** | **Base Period Ending Balance Jun-26** | **Linkage Beginning Balance Jul-26** |
| 788 | 96828686 | ALM Upg and ELA 2026 | 1,081,482 | (1,080,859) | 623 | 623 |
| 789 | 96828725 | Cybersecurity Program 2025 | 362,068 | (377,053) | - | - |
| 790 | 96828748 | Adobe Licensing Agreement 2028 | - | - | - | - |
| 791 | 96828757 | Email Resil Modern Sec Ph 1 2027 | - | - | - | - |
| 792 | 96828764 | Gartner Support Contracts 2025 | 23,395 | - | 417,120 | 417,120 |
| 793 | 96828765 | Automation Anywhere ELA 2025 | 550,722 | (550,722) | - | - |
| 794 | 96828767 | TDM Decommissioning 2027 | - | - | - | - |
| 795 | 96828786 | Gigamon Co-Termed ELA 2026 | 109 | - | 109 | 109 |
| 796 | 96828825 | Infrast-New Capabilities Prgrm 2025 | 75,806 | (345,588) | - | - |
| 797 | 96828846 | Infrast-New Capabilities Prgrm 2026 | 86,146 | - | 86,146 | 86,146 |
| 798 | 96828857 | Endpoint Hardening Ph 1 2027 | - | - | - | - |
| 799 | 96828867 | Texas Internet Egress via BGP 2027 | - | - | - | - |
| 800 | 96828868 | PNM Foundation Blackbaud ELA 2028 | - | - | - | - |
| 801 | 96828926 | Lifecycle Mgmt-Infra Prgrm 2026 | 957,412 | - | 957,412 | 957,412 |
| 802 | 96828927 | Lifecycle Mgmt-Infra Prgrm 2027 | - | - | - | - |
| 803 | 96828945 | Telecom-New Capabilities Prgrm 2025 | 153,427 | (185,102) | - | - |
| 804 | 96828946 | Tech Adv-Future Cap Program 2026 | - | - | - | - |
| 805 | 96828947 | Tech Adv-Future Cap Program 2027 | - | - | - | - |
| 806 | 96828957 | Enhance Auth Modern Ph 1 2027 | - | - | - | - |
| 807 | 96828965 | Tibco Platform Upg 2025 | 657,546 | (449,763) | 207,784 | 207,784 |
| 808 | 96828966 | Blue Snow ELA 2026 | 77,232 | - | 77,232 | 77,232 |
| 809 | 96828967 | VMware Cloud Found Dev 2027 | - | - | - | - |
| 810 | 96829026 | Telecom-New Capabilities Prgrm 2026 | 6,878 | - | 6,878 | 6,878 |
| 811 | 96829048 | CyberArk PAM Upgrade 2028 | - | - | - | - |
| 812 | 96829057 | Gartner Support Contracts 2027 | - | - | - | - |
| 813 | 96829065 | NH360 Portfolio Insights ELA | 491,003 | (491,003) | - | - |
| 814 | 96829066 | SigmaFlow Upg 2026 | - | - | - | - |
| 815 | 96829067 | Threat Exp Mgmt Mod Ph 1 2027 | - | - | - | - |
| 816 | 96829068 | Optiv Saviynt True Up 2028 | - | - | - | - |
| 817 | 96829127 | Cisco Security ELA 2027 | - | - | - | - |

| | A | B | G | H | I | J |
|---|---|---|---|---|---|---|
| 1 | **Public Service Company of New Mexico** | | | | | |
| 2 | **Schedule B-4** | | | | | |
| 3 | **Construction Work In Progress** | | | | | |
| 4 | **Base Period Ending 6/30/2026** | | | | | |
| 5 | **Test Period Ending 9/30/2028** | | | | | |
| 6 | **This schedule is sponsored by PNM Witness Gutierrez** | | | | | |
| 7 | **Project #** | **Project Description** | **Expenditures Through End of Base Period** | **Clearings Through End of Base Period** | **Base Period Ending Balance Jun-26** | **Linkage Beginning Balance Jul-26** |
| 818 | 96829146 | Ent Firewall Renewal 2026 | - | - | - | - |
| 819 | 96829157 | Lewisville Network Refresh 2027 | - | - | - | - |
| 820 | 96829165 | AI Program 2025 | 3,295,311 | (3,385,142) | (0) | (0) |
| 821 | 96829228 | NetApp Banner Storage ELA 2028 | - | - | - | - |
| 822 | 96829247 | Broadcom ELA 2027 | - | - | - | - |
| 823 | 96829256 | Denodo BI ELA 2026 | 453,378 | (453,378) | - | - |
| 824 | 96829257 | Lewisville Load Balancer F5 2027 | - | - | - | - |
| 825 | 96829265 | VMware vCenter, vSphere ELA 2025 | 18,948 | (18,948) | - | - |
| 826 | 96829266 | Web App Mod Prog 2026 | - | - | - | - |
| 827 | 96829348 | Pathlock ELA 2028 | - | - | - | - |
| 828 | 96829357 | Lewisville Sec Stack Modern 2027 | - | - | - | - |
| 829 | 96829358 | Fortress ELA 2028 | - | - | - | - |
| 830 | 96829367 | CPR Crisis Resilience 2027 | - | - | - | - |
| 831 | 96829427 | Splunk IT Core Enterprise ELA 2027 | - | - | - | - |
| 832 | 96829444 | CISCO Ent Lic Agreement 2024 | (16,322) | 16,322 | - | - |
| 833 | 96829446 | CPR Corp Security 2026 | 260,775 | - | 260,775 | 260,775 |
| 834 | 96829447 | CPR Corp Security 2027 | - | - | - | - |
| 835 | 96829448 | CPR Corp Security 2028 | - | - | - | - |
| 836 | 96829457 | Network Perim File Threat 2027 | - | - | - | - |
| 837 | 96829527 | eDOCS DM Tech Stack Upgrade 2027 | - | - | - | - |
| 838 | 96829528 | SETA KnowBe4 ELA 2028 | - | - | - | - |
| 839 | 96829557 | Network Sec Infra Auto 2027 | - | - | - | - |
| 840 | 96829558 | Gartner Support Contracts 2028 | - | - | - | - |
| 841 | 96829565 | ITSM 2025 SAM Pro and Integrations | 531,325 | (2,402,130) | - | - |
| 842 | 96829625 | CPR Telecom Blanket 2025 | 1,116,875 | (1,257,747) | - | - |
| 843 | 96829627 | Tanium ELA 2027 | - | - | - | - |
| 844 | 96829628 | Oracle ELA 2028 | - | - | - | - |
| 845 | 96829646 | CPR Telecom Blanket 2026 | 300,102 | - | 300,102 | 300,102 |
| 846 | 96829647 | CPR Telecom Blanket 2027 | - | - | - | - |
| 847 | 96829648 | CPR Telecom Blanket 2028 | - | - | - | - |

| | A | B | G | H | I | J |
|---|---|---|---|---|---|---|
| 1 | **Public Service Company of New Mexico** | | | | | |
| 2 | **Schedule B-4** | | | | | |
| 3 | **Construction Work In Progress** | | | | | |
| 4 | **Base Period Ending 6/30/2026** | | | | | |
| 5 | **Test Period Ending 9/30/2028** | | | | | |
| 6 | **This schedule is sponsored by PNM Witness Gutierrez** | | | | | |
| 7 | **Project #** | **Project Description** | **Expenditures Through End of Base Period** | **Clearings Through End of Base Period** | **Base Period Ending Balance Jun-26** | **Linkage Beginning Balance Jul-26** |
| 848 | 96829665 | Enterprise Backup Replacement 2025 | 114,525 | (1,855,262) | - | - |
| 849 | 96829666 | Microsoft CSP ELA and Azure 2026 | - | - | - | - |
| 850 | 96829728 | ServiceNow ELA 2028 | - | - | - | - |
| 851 | 96829757 | Traka ELA 2027 | - | - | - | - |
| 852 | 96829765 | Adobe Licensing Agreement 2025 | 8,409 | (8,409) | - | - |
| 853 | 96829766 | Enterprise Data Storage Refr 2026 | 59,448 | - | 59,448 | 59,448 |
| 854 | 96829825 | RedHat ELA 2025 | 5,752 | (1,191,669) | - | - |
| 855 | 96829827 | Infoblox ELA 2027 | - | - | - | - |
| 856 | 96829845 | DFIN Collaboration ELA 2026 | - | - | - | - |
| 857 | 96829857 | Privil Sys Session Mgmt Ph 1 2027 | - | - | - | - |
| 858 | 96829865 | Windows 11 2025 | 299,053 | (534,161) | - | - |
| 859 | 96829866 | Cognos Upgrade 2026 | 179,986 | (179,986) | - | - |
| 860 | 96829926 | Security Video System 2026 | - | - | - | - |
| 861 | 96829928 | Mythos-Ready AI Cyber Def Prog 2028 | - | - | - | - |
| 862 | 96829945 | CPR Corp Security 2025 | 176,499 | (249,401) | - | - |
| 863 | 96829957 | RSM Qualys Portal PCI Scans 2027 | - | - | - | - |
| 864 | 96829966 | Identity Access Mgmt (IAM) 2026 | 1,896,905 | - | 1,896,905 | 1,896,905 |
| 865 | 96830525 | Aztec Data Center Chillers | 1,165,722 | (1,165,722) | - | - |
| 866 | 96830526 | Data Center Cooling Towers Repl | - | - | - | - |
| 867 | 96830625 | Aztec DC Office Improvements 2025 | (9,527) | 1,727 | (0) | (0) |
| 868 | 96830626 | Data Center BTS Help Desk Cubicles | 183,212 | (183,212) | - | - |
| 869 | 96830725 | Data Center UPS Battery Backups | 1,724,045 | (1,724,045) | - | - |
| 870 | 96830726 | Data Center NOC Split Systems | 90,256 | (90,256) | - | - |
| 871 | 96830826 | Data Center Shed and Paving | 134,856 | (134,856) | - | - |
| 872 | 96831007 | Gen Svcs Maint Blankt - Data Center | - | - | - | - |
| 873 | 96834025 | Data Center UPS Battery Backups | 407 | - | 407 | 407 |
| 874 | 96834157 | DC Server HW Ref 2027 | - | - | - | - |
| 875 | 96834158 | DC Server HW Ref 2028 | - | - | - | - |
| 876 | 97130526 | TXNM Farmington Office | 923,396 | - | 923,396 | 923,396 |
| 877 | 97131007 | Gen Svcs Maint Blanket - Farmington | - | - | - | - |

| | A | B | G | H | I | J |
|---|---|---|---|---|---|---|
| 1 | **Public Service Company of New Mexico** | | | | | |
| 2 | **Schedule B-4** | | | | | |
| 3 | **Construction Work In Progress** | | | | | |
| 4 | **Base Period Ending 6/30/2026** | | | | | |
| 5 | **Test Period Ending 9/30/2028** | | | | | |
| 6 | **This schedule is sponsored by PNM Witness Gutierrez** | | | | | |
| 7 | **Project #** | **Project Description** | **Expenditures Through End of Base Period** | **Clearings Through End of Base Period** | **Base Period Ending Balance Jun-26** | **Linkage Beginning Balance Jul-26** |
| 878 | 97230625 | Masthead TPO Roof | 1,032,963 | (1,032,963) | - | - |
| 879 | 97230725 | Masthead HVAC RTU Replacement | 1,176,371 | (1,176,371) | - | - |
| 880 | 97231007 | Gen Svcs Maint Blanket- Masthead | - | - | - | - |
| 881 | 97231026 | Masthead 2nd Floor Conference Room | 49,433 | - | 49,433 | 49,433 |
| 882 | 97728024 | Phy Sec-New Capabilities Prgrm 2024 | 97 | (97) | 0 | 0 |
| 883 | 97728025 | Phys Sec New Cap Prog 2025 | 144,747 | (144,747) | - | - |
| 884 | 97728026 | Phys Sec New Cap Prog 2026 | - | - | - | - |
| 885 | 97728027 | Phys Sec New Cap Prog 2027 | - | - | - | - |
| 886 | 97728126 | Genetec ELA 2026 | 205,880 | (205,560) | 320 | 320 |
| 887 | 97728128 | C Cure ELA 2027 | - | - | - | - |
| 888 | 97728225 | Business Cont SNOW 2025 | 275,376 | (275,376) | - | - |
| 889 | 97728228 | EVMS Upg or Replace 2028 | - | - | - | - |
| 890 | 97730018 | Building Maintenance Truck Replace | - | (16) | - | - |
| 891 | 97730024 | 2024 - Gen Svcs Bldg Maint Vehicle | - | (74) | - | - |
| 892 | 97730125 | 2025 Gen Svcs Bldg Maint Vehicle 2 | 31,398 | (31,398) | - | - |
| 893 | 97730524 | General Bldg and MRF Upgrades | - | - | - | - |
| 894 | 97730525 | Employee Parking Elevator Rebuilds | 147,446 | - | 147,446 | 147,446 |
| 895 | 97730526 | HQ Cooling Towers Replacement | - | - | - | - |
| 896 | 97730624 | HQ Roof Replacement 2024 | (112,740) | 112,740 | - | - |
| 897 | 97730625 | HQ Chillers Replacement | 1,750,568 | (1,750,568) | - | - |
| 898 | 97730725 | PNM HQ Executive Gates | 282,014 | (527,169) | - | - |
| 899 | 97731007 | Gen Svcs Bldg Maint Blanket - Corp | (64,429) | (468,840) | 14,480 | 14,480 |
| 900 | 97731121 | HQ Building Boiler Upgrades | (79,516) | 79,516 | - | - |
| 901 | 97732025 | HQ Video Sec Augmentation 2025 | 80,171 | - | 80,171 | 80,171 |
| 902 | 97734126 | Security Mitigation Program 2026 | 16,598 | - | 16,598 | 16,598 |
| 903 | 98628124 | EAM Modernization | 19,059,953 | - | 19,134,997 | 19,134,997 |
| 904 | 98628224 | Maximo Distribution Asset Mgmt 2024 | (4,578) | (281,098) | 31,348 | 31,348 |
| 905 | 99329907 | Payroll Accrual 2015 | 42,870 | - | 77,025 | 77,025 |
| 906 | | | | | | |
| 907 | | Undistributed Balances-184 Clearing Account | (2,641,868) | - | 1,594,662 | 1,594,662 |

| | A | B | G | H | I | J |
|---|---|---|---|---|---|---|
| 1 | **Public Service Company of New Mexico** | | | | | |
| 2 | **Schedule B-4** | | | | | |
| 3 | **Construction Work In Progress** | | | | | |
| 4 | **Base Period Ending 6/30/2026** | | | | | |
| 5 | **Test Period Ending 9/30/2028** | | | | | |
| 6 | **This schedule is sponsored by PNM Witness Gutierrez** | | | | | |
| 7 | **Project #** | **Project Description** | **Expenditures Through End of Base Period** | **Clearings Through End of Base Period** | **Base Period Ending Balance Jun-26** | **Linkage Beginning Balance Jul-26** |
| 908 | | Retirement Work in Progress-108 Account | 289,250 | (544,406) | 372,290 | 372,290 |
| 909 | | | | | | |
| 910 | | **Total Corporate** | **82,476,421** | **(67,396,810)** | **34,641,440** | **34,641,440** |
| 911 | | Less CWIP Clearings Deferred to a Future Rate Case | | | | |
| 912 | | ColdFusion Upg 2027 | | | | |
| 913 | | CPR OT Assets Annual Refresh 2027 | | | | |
| 914 | | Phys Sec New Cap Prog 2027 | | | | |
| 915 | | C Cure ELA 2027 | | | | |
| 916 | | General Bldg and MRF Upgrades | | | | |
| 917 | | Gen Svcs Bldg Maint Blanket - Corp | | | | |
| 918 | | EAM Modernization | | | | |
| 919 | | Less Retirement Work in Progress-108 Account | | 544,406 | | |
| 920 | | **Schedule B-1 Total Corporate Plant in Service Additions** | | **(66,852,404)** | | |

| | A | B | K | L | M | N |
|---|---|---|---|---|---|---|
| 1 | **Public Service Company of New Mexico** | | | | | |
| 2 | **Schedule B-4** | | | | | |
| 3 | **Construction Work In Progress** | | | | | |
| 4 | **Base Period Ending 6/30/2026** | | | | | |
| 5 | **Test Period Ending 9/30/2028** | | | | | |
| 6 | **This schedule is sponsored by PNM Witness Gutierrez** | | | | | |
| 7 | **Project #** | **Project Description** | **Expenditures Through End of Linkage** | **Clearings Through End of Linkage** | **Linkage Ending Balance Sep-27** | **Test Period Beginning Balance Oct-27** |
| 8 | | **Distribution** | | | | |
| 9 | 01099707 | PNM Electric Salvage | - | - | (11,230) | (11,230) |
| 10 | 09128021 | Customer Experience Program 2021 | - | - | - | - |
| 11 | 09128026 | Customer Experience Program 2026 | 573,036 | (709,228) | 1,131 | 1,131 |
| 12 | 09128027 | Customer Experience Program 2027 | 69,173 | - | 69,173 | 69,173 |
| 13 | 09128052 | Co 1-Tibco Integration Suite Upg To | - | - | - | - |
| 14 | 09128127 | Liferay & PNM.com Platform Upg 2027 | 744,090 | - | 744,090 | 744,090 |
| 15 | 09128128 | CIS Replacement | - | - | - | - |
| 16 | 09128323 | ArcFM Upgr to Utility Network Co 1 | - | - | - | - |
| 17 | 09128325 | Community Solar 2025 Cust Consent | - | - | - | - |
| 18 | 09128326 | Customer Comm CANSPAM Pref 2026 | 37,126 | (37,126) | - | - |
| 19 | 09128327 | New Customer Comm Platform 2027 | 1,527,411 | - | 1,527,411 | 1,527,411 |
| 20 | 09128328 | Community Solar Cons Bill 2028 | - | - | - | - |
| 21 | 09128525 | NM Cascade Upgrade 2025 | - | - | - | - |
| 22 | 09128528 | PNM.com Redesign 2028 | - | - | - | - |
| 23 | 09128625 | Community Solar-PRC Additions 2025 | - | - | - | - |
| 24 | 09128725 | NICE InContact Program | 1,368,772 | (843,848) | 552,813 | 552,813 |
| 25 | 09128822 | PNM Bill Redesign | - | - | - | - |
| 26 | 09132025 | Security Video System 2025-NM | - | - | - | - |
| 27 | 10000105 | Residential Line Extensions | - | - | (495) | (495) |
| 28 | 10000107 | Line Extensions - Residential | 10,700,713 | (5,957,102) | 6,918,663 | 6,918,663 |
| 29 | 10000205 | Commercial Line Extensions | - | - | 17,486 | 17,486 |
| 30 | 10000206 | Line Extensions - Commercial | - | - | 7,761 | 7,761 |
| 31 | 10000207 | Line Extensions - Commercial | 10,991,647 | (5,478,552) | 6,841,011 | 6,841,011 |
| 32 | 10000241 | Line Extensions - Residential | - | - | (5,856) | (5,856) |
| 33 | 10000407 | Line Extensions - Misc. | (2,014) | (25,943) | 193 | 193 |
| 34 | 10000507 | Lighting | 157,870 | (168,866) | 28,220 | 28,220 |
| 35 | 10000508 | Lighting T&D | 3,081,553 | (2,984,730) | 582,289 | 582,289 |
| 36 | 10000607 | Distr. Remove & Replace | 3,439,746 | (3,613,488) | 1,701,809 | 1,701,809 |
| 37 | 10000608 | Dist. Remove & Replace T&D | 4,503,522 | (3,332,543) | 2,138,510 | 2,138,510 |

| | A | B | K | L | M | N |
|---|---|---|---|---|---|---|
| 1 | **Public Service Company of New Mexico** | | | | | |
| 2 | **Schedule B-4** | | | | | |
| 3 | **Construction Work In Progress** | | | | | |
| 4 | **Base Period Ending 6/30/2026** | | | | | |
| 5 | **Test Period Ending 9/30/2028** | | | | | |
| 6 | **This schedule is sponsored by PNM Witness Gutierrez** | | | | | |
| 7 | **Project #** | **Project Description** | **Expenditures Through End of Linkage** | **Clearings Through End of Linkage** | **Linkage Ending Balance Sep-27** | **Test Period Beginning Balance Oct-27** |
| 38 | 10000707 | Distr. System Improvements | 5,548,998 | (8,001,829) | 3,124,564 | 3,124,564 |
| 39 | 10000807 | Services | 19,474,007 | (20,067,898) | 2,697,833 | 2,697,833 |
| 40 | 10000907 | Transformers | 13,693,047 | (10,382,954) | 3,687,042 | 3,687,042 |
| 41 | 10001007 | Meter Equipment | 6,493,226 | (5,621,170) | 937,874 | 937,874 |
| 42 | 10001207 | Pole Replacements | 504 | (5,882) | 4,010 | 4,010 |
| 43 | 10001307 | Cable Replacement | 451 | (88,978) | - | - |
| 44 | 10001617 | Voltage Cont Cap Upgrade to Two Way | - | - | (0) | (0) |
| 45 | 10001626 | CENT11 & VOLC11 Conductor Upgrade | 515,682 | - | 515,682 | 515,682 |
| 46 | 10001627 | Central OSMOSE Replacements 27-28 | 836,145 | - | 836,145 | 836,145 |
| 47 | 10001707 | Albuquerque Pure Project | 2,385,165 | (2,502,872) | 346,308 | 346,308 |
| 48 | 10001717 | 8th Street Circuit Rebuild | - | - | 21,446 | 21,446 |
| 49 | 10001725 | Project Array | - | (541) | (0) | (0) |
| 50 | 10001826 | San Pedro Widening | 214,854 | (214,854) | - | - |
| 51 | 10001922 | Overlook Distribution Rebuild | 7,090,521 | - | 8,962,270 | 8,962,270 |
| 52 | 10001924 | 614 Cedar Hill Rd NE | - | - | - | - |
| 53 | 10001928 | Corrales Bluff 14 Feeder | - | - | - | - |
| 54 | 10002010 | Four Hills 13 to Lawrence 14 Feeder | 575,945 | (828,699) | - | - |
| 55 | 10002022 | Valencia Substation Rebuild | 1,803,009 | (6,268,837) | - | - |
| 56 | 10002125 | Lightning Mitigation 2025-2026 | 470,240 | (558,633) | - | - |
| 57 | 10002143 | Asset Health Mntrg-Event-24-28 Co1 | - | - | - | - |
| 58 | 10002224 | AT&T Vault Relocation | 593,567 | (20,197) | (0) | (0) |
| 59 | 10002316 | Bird Guard Reliability | 276,429 | (259,703) | 36,731 | 36,731 |
| 60 | 10002325 | 4th Street and St Mary's Way | 2,210 | (435,997) | - | - |
| 61 | 10002326 | Angel Rd - CRP 23-24 | - | - | - | - |
| 62 | 10002327 | Central Feeder Upgrades | 2,586,475 | - | 2,586,475 | 2,586,475 |
| 63 | 10002421 | Sandia 46kV Breaker Replacement | 3,001,227 | (5,348,345) | 78,290 | 78,290 |
| 64 | 10002425 | Camino Sin Pasada - CRP2324 | - | - | - | - |
| 65 | 10002516 | Pole Grounds Co01 | 217,627 | (224,054) | 30,048 | 30,048 |
| 66 | 10003020 | ELDO12 Feeder Rebuild | 37,155 | (34,625) | 0 | 0 |
| 67 | 10003125 | Project Chase | - | - | (40,000) | (40,000) |

| | A | B | K | L | M | N |
|---|---|---|---|---|---|---|
| 1 | **Public Service Company of New Mexico** | | | | | |
| 2 | **Schedule B-4** | | | | | |
| 3 | **Construction Work In Progress** | | | | | |
| 4 | **Base Period Ending 6/30/2026** | | | | | |
| 5 | **Test Period Ending 9/30/2028** | | | | | |
| 6 | **This schedule is sponsored by PNM Witness Gutierrez** | | | | | |
| 7 | **Project #** | **Project Description** | **Expenditures Through End of Linkage** | **Clearings Through End of Linkage** | **Linkage Ending Balance Sep-27** | **Test Period Beginning Balance Oct-27** |
| 68 | 10003225 | Sandia 46kV Relay Replacement | 401,841 | (2,624,442) | - | - |
| 69 | 10003521 | LSCH12 Feeder Rebuild | - | - | - | - |
| 70 | 10003621 | SOCO12 Feeder Rebuild | - | - | - | - |
| 71 | 10003721 | BACA12 Feeder Rebuild | - | - | - | - |
| 72 | 10003722 | ELCE11 Feeder Rebuild | - | - | - | - |
| 73 | 10005121 | ELCE12 Feeder Rebuild | - | - | - | - |
| 74 | 10005228 | Central Osmose Pole Replacements | 707,333 | (978,686) | - | - |
| 75 | 10005251 | Mesa del Sol Infrastructure CO1 | 5,945,233 | (12,108,325) | - | - |
| 76 | 10005328 | Palomas Feeders | - | - | - | - |
| 77 | 10005424 | Sol Substation Permanent Power | - | - | 0 | 0 |
| 78 | 10005726 | Westpointe Substation-DIST | 11,722,169 | (18,314,611) | - | - |
| 79 | 10005821 | ISLE12 Feeder Rebuild | 213,615 | - | 1,335,372 | 1,335,372 |
| 80 | 10005922 | Prager 12 Volt Imprvmt and Recdtr | - | - | - | - |
| 81 | 10030524 | ESC Admin 2nd Floor Remodel | - | - | - | - |
| 82 | 10030526 | ESC Line Truck Barn Replacement | 1,066,745 | (1,127,863) | - | - |
| 83 | 10030610 | Communication and Equipment Blanket | 88,871 | (106,539) | 18,282 | 18,282 |
| 84 | 10031922 | Gen Svcs Bldg Maint Blanket-Distr | 1,280,503 | (1,346,787) | 177,061 | 177,061 |
| 85 | 10032025 | Furniture for Y Mora office | - | - | - | - |
| 86 | 10034007 | ABQ Metro 2010 Tools & Equipment | 226,653 | (362,197) | 2,586 | 2,586 |
| 87 | 10034012 | Tech Services Distribution Tools | 143,664 | (261,505) | 255 | 255 |
| 88 | 10505323 | Grid Mod - AMI (Advcd Mtrg Infrstr) | 75,888,161 | (90,353,215) | 2,703,738 | 2,703,738 |
| 89 | 10505423 | Grid Mod - Distribution Automation | 21,667,509 | (22,295,625) | - | - |
| 90 | 10505623 | Grid Mod - Dist Planning & Engineer | 2,670,593 | - | 2,670,593 | 2,670,593 |
| 91 | 10528023 | Grid Mod - Customer Info and Analyt | 1,225,684 | (1,948,029) | 18,060 | 18,060 |
| 92 | 10528123 | Grid Mod - Cybersecurity | 2,105,891 | (3,925,475) | 793,483 | 793,483 |
| 93 | 10528223 | Grid Mod - ADMS | 15,045,272 | - | 17,888,110 | 17,888,110 |
| 94 | 10528323 | Grid Mod - Data Mgmt & Architecture | 7,411,116 | (3,630,633) | 4,947,794 | 4,947,794 |
| 95 | 10534224 | Grid Mod - Telecommunications | 13,895,971 | (14,611,861) | 2,682 | 2,682 |
| 96 | 14000107 | Line Extensions - Residential | 824,416 | (580,363) | 843,151 | 843,151 |
| 97 | 14000207 | Line Extensions - Commercial | 20,630 | (23,999) | 8,592 | 8,592 |

| | A | B | K | L | M | N |
|---|---|---|---|---|---|---|
| 1 | **Public Service Company of New Mexico** | | | | | |
| 2 | **Schedule B-4** | | | | | |
| 3 | **Construction Work In Progress** | | | | | |
| 4 | **Base Period Ending 6/30/2026** | | | | | |
| 5 | **Test Period Ending 9/30/2028** | | | | | |
| 6 | **This schedule is sponsored by PNM Witness Gutierrez** | | | | | |
| 7 | **Project #** | **Project Description** | **Expenditures Through End of Linkage** | **Clearings Through End of Linkage** | **Linkage Ending Balance Sep-27** | **Test Period Beginning Balance Oct-27** |
| 98 | 14000407 | Line Extension - Misc. | - | - | - | - |
| 99 | 14000607 | Distr. Remove & Replace | 403,671 | (238,534) | 235,105 | 235,105 |
| 100 | 14000707 | Distr. System Improvements | 271,296 | (184,564) | 116,858 | 116,858 |
| 101 | 14001207 | Pole Replacements | - | - | 0 | 0 |
| 102 | 14001307 | Cable Replacement | - | 0 | (0) | (0) |
| 103 | 14001621 | TIJE12 Feeder Rebuild | 305,883 | - | 2,443,023 | 2,443,023 |
| 104 | 15000508 | Lighting T&D | 336,930 | (411,516) | 63,224 | 63,224 |
| 105 | 15000608 | Distr. Remove & Replace T&D | 2,068,965 | (4,646,520) | 1,608,864 | 1,608,864 |
| 106 | 15001816 | Cliff Sub Rebuild | - | - | - | - |
| 107 | 15002316 | Bird Guard Reliabilty Co34 | 410,142 | (434,711) | 70,691 | 70,691 |
| 108 | 15003010 | Substation Equipment Repl. blanket | - | - | 7 | 7 |
| 109 | 15003019 | Lordsburg Substation Improvements | - | - | - | - |
| 110 | 15034011 | Southern Tools & Equipment | 150,250 | (174,428) | 20,219 | 20,219 |
| 111 | 15100107 | Line Extensions - Residential | 208,193 | (37,178) | 238,586 | 238,586 |
| 112 | 15100207 | Line Extensions - Commercial | 890,375 | (318,332) | 602,135 | 602,135 |
| 113 | 15100407 | Line Extensions - Misc. | - | - | - | - |
| 114 | 15100507 | Lighting | 101,990 | (84,087) | 17,903 | 17,903 |
| 115 | 15100607 | Distr. Remove & Replace | 89,049 | (51,883) | 37,166 | 37,166 |
| 116 | 15100707 | Distr. System Improvements | 204,004 | (162,170) | 113,495 | 113,495 |
| 117 | 15100807 | Services | 494,134 | (525,088) | 79,110 | 79,110 |
| 118 | 15100907 | Transformers | 710,779 | (638,420) | 95,527 | 95,527 |
| 119 | 15101007 | Meter Equipment | 26,444 | (34,169) | 4,448 | 4,448 |
| 120 | 15101207 | Pole Replacement | - | - | (0) | (0) |
| 121 | 15101807 | Alamorgordo Pure Project | 569,557 | (603,235) | 86,767 | 86,767 |
| 122 | 15102019 | Tularosa 13 Ph Load Bal-Voltage Reg | 329,499 | (462,140) | - | - |
| 123 | 15102026 | Alamogordo Land CO1 | - | - | - | - |
| 124 | 15105222 | Alamogordo Substation Co1 | 7,712,687 | - | 7,712,687 | 7,712,687 |
| 125 | 15200107 | Line Extensions - Residential | 90,088 | (162,841) | 90,801 | 90,801 |
| 126 | 15200207 | Line Extensions - Commercial | 259,496 | (20,433) | 236,012 | 236,012 |
| 127 | 15200407 | Line Extensions - Misc. | 1 | (1) | 0 | 0 |

| | A | B | K | L | M | N |
|---|---|---|---|---|---|---|
| 1 | **Public Service Company of New Mexico** | | | | | |
| 2 | **Schedule B-4** | | | | | |
| 3 | **Construction Work In Progress** | | | | | |
| 4 | **Base Period Ending 6/30/2026** | | | | | |
| 5 | **Test Period Ending 9/30/2028** | | | | | |
| 6 | **This schedule is sponsored by PNM Witness Gutierrez** | | | | | |
| 7 | **Project #** | **Project Description** | **Expenditures Through End of Linkage** | **Clearings Through End of Linkage** | **Linkage Ending Balance Sep-27** | **Test Period Beginning Balance Oct-27** |
| 128 | 15200507 | Lighting | 35,137 | (198,188) | 12,855 | 12,855 |
| 129 | 15200607 | Distr. Remove & Replace | 233,173 | (112,294) | 119,545 | 119,545 |
| 130 | 15200707 | Distr. System Improvements | 814,271 | (725,258) | 304,992 | 304,992 |
| 131 | 15200807 | Services | 174,514 | (237,498) | 38,599 | 38,599 |
| 132 | 15200907 | Transformers | 316,333 | (259,070) | 85,877 | 85,877 |
| 133 | 15201007 | Meter Equipment | 126 | (97) | 29 | 29 |
| 134 | 15201707 | Ruidoso Pure Project | 370,435 | (359,329) | 46,431 | 46,431 |
| 135 | 15202025 | Ruidoso Hospital Upgrade | - | - | - | - |
| 136 | 15205224 | South Fork Fire Restoration | - | - | - | - |
| 137 | 15500107 | Line Extensions - Residential | 1,087,759 | (478,441) | 851,865 | 851,865 |
| 138 | 15500207 | Line Extensions - Commercial | 2,489,799 | (1,493,993) | 1,107,130 | 1,107,130 |
| 139 | 15500407 | Line Extensions - Misc. | 1,078 | (129) | 9,060 | 9,060 |
| 140 | 15500507 | Lighting | 2,772 | (27,711) | 1,259 | 1,259 |
| 141 | 15500607 | Distr. Remove & Replace | 343,890 | (153,413) | 191,708 | 191,708 |
| 142 | 15500707 | Distr. System Improvements | 624,136 | (1,071,822) | 346,216 | 346,216 |
| 143 | 15500807 | Services | 813,244 | (809,798) | 108,395 | 108,395 |
| 144 | 15500907 | Transformers | 551,945 | (492,490) | 73,610 | 73,610 |
| 145 | 15501007 | Meter Equipment | 38,831 | (31,910) | 6,920 | 6,920 |
| 146 | 15501707 | Silver City Pure Project | 1,393,113 | (1,834,913) | 139,296 | 139,296 |
| 147 | 15502027 | MD-1 Spare Transformer Replacements | 240,067 | - | 240,067 | 240,067 |
| 148 | 15502321 | Gila National Forest CO1 | 1,285,573 | (1,789,834) | - | - |
| 149 | 15505225 | HFA Pole Rplc SilverCity/Ruidoso | 1,134,206 | (2,571,450) | - | - |
| 150 | 15530525 | HVAC Silver City Service Centers | - | - | - | - |
| 151 | 15530621 | Silver City Metal Building | - | - | 62,401 | 62,401 |
| 152 | 15530624 | Standing Seam Metal Roof | - | - | - | - |
| 153 | 20000107 | Line Extensions - Residential | 201,740 | (20,120) | 226,338 | 226,338 |
| 154 | 20000207 | Line Extensions - Commercial | 451,938 | (25,939) | 355,062 | 355,062 |
| 155 | 20000407 | Line Extension - Misc. | - | - | 4,289 | 4,289 |
| 156 | 20000507 | Lighting | 6,752 | (26,931) | 2,244 | 2,244 |
| 157 | 20000607 | Distr. Remove & Replace | 418,922 | (286,122) | 226,900 | 226,900 |

| | A | B | K | L | M | N |
|---|---|---|---|---|---|---|
| 1 | **Public Service Company of New Mexico** | | | | | |
| 2 | **Schedule B-4** | | | | | |
| 3 | **Construction Work In Progress** | | | | | |
| 4 | **Base Period Ending 6/30/2026** | | | | | |
| 5 | **Test Period Ending 9/30/2028** | | | | | |
| 6 | **This schedule is sponsored by PNM Witness Gutierrez** | | | | | |
| 7 | **Project #** | **Project Description** | **Expenditures Through End of Linkage** | **Clearings Through End of Linkage** | **Linkage Ending Balance Sep-27** | **Test Period Beginning Balance Oct-27** |
| 158 | 20000707 | Distr. System Improvements | 284,440 | (255,405) | 155,648 | 155,648 |
| 159 | 20000807 | Services | 72,502 | (116,708) | 16,525 | 16,525 |
| 160 | 20001207 | Pole Replacements | - | - | 0 | 0 |
| 161 | 20001707 | Deming Pure Project | 200,122 | (207,591) | 15,476 | 15,476 |
| 162 | 20001722 | Deming & Gold Substations | 74,311 | - | 996,605 | 996,605 |
| 163 | 20002024 | Deming Streetlight Upgrades | - | - | - | - |
| 164 | 20003026 | Hondale Transformer Replacement | (5,059,915) | - | (5,059,915) | (5,059,915) |
| 165 | 20030526 | Deming Station Roof Repair | 190,585 | (190,585) | - | - |
| 166 | 30000107 | Line Extensions - Residential | 6,570 | (10,350) | 49,554 | 49,554 |
| 167 | 30000207 | Line Extensions - Commercial | 2,669,364 | (467,993) | 2,385,429 | 2,385,429 |
| 168 | 30000607 | Distr. Remove & Replace | 44,056 | (39,649) | 20,796 | 20,796 |
| 169 | 30000705 | Distr. System Imp. | - | - | 71 | 71 |
| 170 | 30000707 | Distr. System Improvements | 100,032 | (111,787) | 61,880 | 61,880 |
| 171 | 30000807 | Services | 279,061 | (315,199) | 45,566 | 45,566 |
| 172 | 30001623 | Las Vegas Streetlight Upgrades | - | - | - | - |
| 173 | 30001707 | Las Vegas Pure Project | - | - | - | - |
| 174 | 41000107 | Line Extensions - Residential | 3,362,172 | (380,817) | 3,940,504 | 3,940,504 |
| 175 | 41000207 | Line Extensions - Commercial | 849,709 | (128,520) | 1,194,167 | 1,194,167 |
| 176 | 41000407 | Line Extensions - Misc. | 5,829 | (156,211) | 7,876 | 7,876 |
| 177 | 41000507 | Lighting | 351 | (268) | 83 | 83 |
| 178 | 41000508 | Lighting T&D | - | - | - | - |
| 179 | 41000607 | Distr. Remove & Replace | 216,368 | (897,578) | 242,093 | 242,093 |
| 180 | 41000608 | Distr. Remove & Replace T&D | 969,759 | (760,043) | 421,584 | 421,584 |
| 181 | 41000707 | Distr. System Improvements | 811,328 | (922,664) | 415,023 | 415,023 |
| 182 | 41000807 | Services | 6,092,621 | (5,924,112) | 871,648 | 871,648 |
| 183 | 41001621 | Distribution Looping in SF-WFF | - | - | 0 | 0 |
| 184 | 41001622 | Caja Del Rio 13 Backbone Upgrade | (36) | 36 | - | - |
| 185 | 41001625 | Los Suenos Trail SF and Backbone | - | - | - | - |
| 186 | 41001707 | Santa Fe Pure Project | 360,753 | (312,249) | 48,504 | 48,504 |
| 187 | 41001720 | Santa Fe Streetlight Conversion | - | - | - | - |

| | A | B | K | L | M | N |
|---|---|---|---|---|---|---|
| 1 | **Public Service Company of New Mexico** | | | | | |
| 2 | **Schedule B-4** | | | | | |
| 3 | **Construction Work In Progress** | | | | | |
| 4 | **Base Period Ending 6/30/2026** | | | | | |
| 5 | **Test Period Ending 9/30/2028** | | | | | |
| 6 | **This schedule is sponsored by PNM Witness Gutierrez** | | | | | |
| 7 | **Project #** | **Project Description** | **Expenditures Through End of Linkage** | **Clearings Through End of Linkage** | **Linkage Ending Balance Sep-27** | **Test Period Beginning Balance Oct-27** |
| 188 | 41001721 | FOMA13 Feeder Rebuild | 10,785 | (2,127,510) | - | - |
| 189 | 41001820 | SF Switchgear Replacements 20-24 | - | - | - | - |
| 190 | 41001825 | Cerillos Rd | 2,329,837 | (2,397,436) | - | - |
| 191 | 41001924 | Zafarano Feeder 13 Norm Loading SI | - | - | - | - |
| 192 | 41002015 | Caja del Rio 11 to Beckner 12 FT | 2,492,616 | - | 2,492,616 | 2,492,616 |
| 193 | 41002023 | El Dorado 12 Phase 2 Feeder Rebuild | 1,590,361 | (1,944,503) | - | - |
| 194 | 41002025 | Estrada Maya - CRP1P | - | - | - | - |
| 195 | 41002124 | Beckner 14 Line Extension | 2,135,491 | - | 2,135,491 | 2,135,491 |
| 196 | 41002215 | Mejia 14 to SantaFeEstates Line Ext | - | - | 139,308 | 139,308 |
| 197 | 41002316 | Bird Guard Reliabilty | 143,392 | (127,880) | 19,648 | 19,648 |
| 198 | 41002425 | CamelTracks13 to StatePen12 Feeder | - | - | - | - |
| 199 | 41002516 | Pole Grounds | 24,125 | (28,146) | 3,448 | 3,448 |
| 200 | 41002525 | STPE12 HC Solution | 1,858,649 | (3,183,957) | - | - |
| 201 | 41002724 | COLI13 Feeder Rebuild Phase 2 | 4,300 | (851,396) | (0) | (0) |
| 202 | 41002824 | Mejia 115kV Transformer LTC Failure | 77,356 | (303,339) | - | - |
| 203 | 41003027 | Santa Fe 46kV Pole Replacemnt 2028 | 809,427 | - | 809,427 | 809,427 |
| 204 | 41005221 | COLI13 Feeder Rebuild | - | - | (0) | (0) |
| 205 | 41005324 | STPE13 Feeder Rebuild | 1,828,428 | (7,059,761) | - | - |
| 206 | 41005328 | Santa Fe 46kV Pole Replacement 2029 | - | - | - | - |
| 207 | 41005525 | Zia Substation Rebuild CO1 | 3,682,362 | (1,479,193) | 2,203,169 | 2,203,169 |
| 208 | 41030526 | Santa Fe Cooling Tower Replacement | 359,492 | (359,492) | - | - |
| 209 | 41030820 | Santa Fe Building Improvements | - | - | - | - |
| 210 | 41034007 | Tools & Equipment | 217,325 | (239,410) | 600 | 600 |
| 211 | 41037005 | M&J - Comcast connects | - | - | (333) | (333) |
| 212 | 50000107 | Line Extensions - Residential | 805,216 | (394,036) | 708,540 | 708,540 |
| 213 | 50000207 | Line Extensions - Commercial | 1,336,586 | (346,316) | 768,496 | 768,496 |
| 214 | 50000407 | Line extensions - Misc. | - | - | 0 | 0 |
| 215 | 50000507 | Lighting | 1,712 | (1,379) | 333 | 333 |
| 216 | 50000607 | Distr. Remove & Replace | 459,846 | (748,744) | 239,975 | 239,975 |
| 217 | 50000707 | Distr. System Improvements | 435,163 | (433,008) | 268,605 | 268,605 |

| | A | B | K | L | M | N |
|---|---|---|---|---|---|---|
| 1 | **Public Service Company of New Mexico** | | | | | |
| 2 | **Schedule B-4** | | | | | |
| 3 | **Construction Work In Progress** | | | | | |
| 4 | **Base Period Ending 6/30/2026** | | | | | |
| 5 | **Test Period Ending 9/30/2028** | | | | | |
| 6 | **This schedule is sponsored by PNM Witness Gutierrez** | | | | | |
| 7 | **Project #** | **Project Description** | **Expenditures Through End of Linkage** | **Clearings Through End of Linkage** | **Linkage Ending Balance Sep-27** | **Test Period Beginning Balance Oct-27** |
| 218 | 60000804 | Community Solar Services | - | - | (631,245) | (631,245) |
| 219 | 60001627 | Distribution Telecom 2027-2028 | 1,516,493 | - | 1,516,493 | 1,516,493 |
| 220 | 60001628 | COPR Central OSMOSE 2028-2029 | - | - | - | - |
| 221 | 60001643 | Sandia 115kV Dist | - | - | - | - |
| 222 | 60001644 | Cable Replacement Program 2023-2024 | 3,246 | (640,255) | - | - |
| 223 | 60001645 | Cable Replacement Program 2024-2025 | 693 | (138,217) | 0 | 0 |
| 224 | 60001646 | Cable Replacement Program 2025-2026 | 5,363,688 | (9,537,552) | - | - |
| 225 | 60001647 | Cable Replacement Program 2026-2027 | 10,185,002 | (5,414,956) | 4,770,045 | 4,770,045 |
| 226 | 60001648 | Cable Replacement Program 2027-2028 | 2,411,755 | - | 2,411,755 | 2,411,755 |
| 227 | 60001649 | Cable Replacement Program 2028-2029 | - | - | - | - |
| 228 | 60001715 | Storm Funding Project Co01 | 2,603,333 | (2,603,333) | - | - |
| 229 | 60001719 | SCADAMATE Switches (OVERHEAD) | - | - | 0 | 0 |
| 230 | 60001721 | Single Phase URD Replacement-WFF | - | - | - | - |
| 231 | 60001725 | Sub-Transmission Recloser Install | 977,274 | (1,283,088) | - | - |
| 232 | 60001726 | Distribution Telecom 2026-2027 | 7,780,557 | - | 7,780,557 | 7,780,557 |
| 233 | 60001727 | Northern OSMOSE Pole Rplcmnts 27-28 | 835,300 | - | 835,300 | 835,300 |
| 234 | 60001728 | NORP Northern OSMOSE 2028-2029 | - | - | - | - |
| 235 | 60001744 | Dist Struc Replace and Upgrade 2023 | - | - | (0) | (0) |
| 236 | 60001745 | Dist Struc Replace and Upgrade 2024 | 25 | (4,792) | (0) | (0) |
| 237 | 60001746 | Dist Struc Replace and Upgrade 2025 | 553,154 | (771,207) | - | - |
| 238 | 60001747 | Dist Struc Replace and Upgrade 2026 | 259,815 | - | 259,815 | 259,815 |
| 239 | 60001748 | Dist Struc Replace and Upgrade 2027 | 221,833 | - | 221,833 | 221,833 |
| 240 | 60001749 | Dist Struc Replace and Upgrade 2028 | - | - | - | - |
| 241 | 60001822 | Hawkins Substation | 157,963 | - | 2,118,485 | 2,118,485 |
| 242 | 60001826 | State Wide Private Light Conversion | 1,362,703 | (64,054) | 1,362,379 | 1,362,379 |
| 243 | 60001828 | SOPR Southern OSMOSE 2028-2029 | - | - | - | - |
| 244 | 60001844 | Switchgear Replace and Upgrade 2023 | - | - | - | - |
| 245 | 60001845 | Switchgear Replace and Upgrade 2024 | 404 | (80,023) | (0) | (0) |
| 246 | 60001846 | Switchgear Replace and Upgrade 2025 | 101,954 | (754,731) | - | - |
| 247 | 60001847 | Switchgear Replace and Upgrade 2026 | 520,722 | (273,733) | 246,989 | 246,989 |

| | A | B | K | L | M | N |
|---|---|---|---|---|---|---|
| 1 | **Public Service Company of New Mexico** | | | | | |
| 2 | **Schedule B-4** | | | | | |
| 3 | **Construction Work In Progress** | | | | | |
| 4 | **Base Period Ending 6/30/2026** | | | | | |
| 5 | **Test Period Ending 9/30/2028** | | | | | |
| 6 | **This schedule is sponsored by PNM Witness Gutierrez** | | | | | |
| 7 | **Project #** | **Project Description** | **Expenditures Through End of Linkage** | **Clearings Through End of Linkage** | **Linkage Ending Balance Sep-27** | **Test Period Beginning Balance Oct-27** |
| 248 | 60001848 | Switchgear Replace and Upgrade 2027 | 150,631 | - | 150,631 | 150,631 |
| 249 | 60001849 | Switchgear Replace and Upgrade 2028 | - | - | - | - |
| 250 | 60001925 | Rodeo Substation Rebuild CO1 | 9,388,505 | (13,385,140) | - | - |
| 251 | 60001927 | Joint Use Make Ready 2027 | 2,636,407 | - | 2,636,407 | 2,636,407 |
| 252 | 60001928 | Distribution Telecomm 2028-2029 | - | - | - | - |
| 253 | 60001944 | Smart Devi Replace and Upgrade 2023 | - | - | 0 | 0 |
| 254 | 60001945 | Smart Devi Replace and Upgrade 2024 | 189 | (38,557) | (0) | (0) |
| 255 | 60001946 | Smart Devi Replace and Upgrade 2025 | 632,414 | (1,390,730) | - | - |
| 256 | 60001947 | Smart Devi Replace and Upgrade 2026 | 570,884 | (570,884) | - | - |
| 257 | 60001948 | Smart Devi Replace and Upgrade 2027 | 239,070 | - | 239,070 | 239,070 |
| 258 | 60001949 | Smart Devi Replace and Upgrade 2028 | - | - | - | - |
| 259 | 60002010 | Misc Substation Improvements Blanke | 157,965 | (157,965) | - | - |
| 260 | 60002019 | Circuit Switcher Repl/Upgrade Distr | - | - | 2,599 | 2,599 |
| 261 | 60002023 | Los Luans Capacity Phase IV - Distr | - | - | - | - |
| 262 | 60002044 | PRC-002 Compliance DFR - Dist | - | - | 25,791 | 25,791 |
| 263 | 60002046 | Distr Comm Improvement 2026-2030 | 154,113 | (56,581) | 97,532 | 97,532 |
| 264 | 60002050 | Highway Crossings 2025-2026 | 272 | (9,040) | - | - |
| 265 | 60002110 | Misc 46kv Line | 131,822 | (439,734) | 62,973 | 62,973 |
| 266 | 60002120 | Distribution Relay Replacement | - | - | - | - |
| 267 | 60002144 | Open Wire Secondary Upgrade 2023-20 | - | - | 0 | 0 |
| 268 | 60002145 | Open Wire Secondary Upgrade 2024-20 | 6 | (2,048) | (0) | (0) |
| 269 | 60002146 | Open Wire Secondary Upgrade 2025-20 | 4,150 | (819,745) | - | - |
| 270 | 60002147 | Open Wire Secondary Upgrade 2026 | 1,002,368 | - | 1,002,368 | 1,002,368 |
| 271 | 60002148 | Open Wire Secondary Upgrade 2027 | 256,660 | - | 256,660 | 256,660 |
| 272 | 60002149 | Open Wire Secondary Upgrade 2028 | - | - | - | - |
| 273 | 60002206 | Deming SCADA & RCCS Upgrade | - | - | (2,625) | (2,625) |
| 274 | 60002226 | Facility Conflicts 2026 | 1,246,961 | (1,246,961) | - | - |
| 275 | 60002227 | Facility Conflicts 2027 | 757,709 | - | 757,709 | 757,709 |
| 276 | 60002228 | Facility Conflicts 2028 | - | - | - | - |
| 277 | 60002244 | Distribution Looping 2023-2024 | - | - | (0) | (0) |

| | A | B | K | L | M | N |
|---|---|---|---|---|---|---|
| 1 | **Public Service Company of New Mexico** | | | | | |
| 2 | **Schedule B-4** | | | | | |
| 3 | **Construction Work In Progress** | | | | | |
| 4 | **Base Period Ending 6/30/2026** | | | | | |
| 5 | **Test Period Ending 9/30/2028** | | | | | |
| 6 | **This schedule is sponsored by PNM Witness Gutierrez** | | | | | |
| 7 | **Project #** | **Project Description** | **Expenditures Through End of Linkage** | **Clearings Through End of Linkage** | **Linkage Ending Balance Sep-27** | **Test Period Beginning Balance Oct-27** |
| 278 | 60002245 | Distribution Looping 2024-2025 | 5,886 | (1,164,701) | (0) | (0) |
| 279 | 60002246 | Distribution Looping 2025-2026 | 968,251 | (3,707,007) | - | - |
| 280 | 60002247 | Distribution Looping 2026-2027 | 1,626,813 | (1,053,716) | 573,098 | 573,098 |
| 281 | 60002248 | Distribution Looping 2027-2028 | 1,176,954 | - | 1,176,954 | 1,176,954 |
| 282 | 60002249 | Distribution Looping 2028-2029 | - | - | - | - |
| 283 | 60002325 | Project Oppidan | 6,672 | (1,320,885) | - | - |
| 284 | 60002327 | Cochiti 12-feeder Improvements Cap | - | - | - | - |
| 285 | 60002328 | Tramway feeders | 2,115,343 | - | 2,115,343 | 2,115,343 |
| 286 | 60002424 | St Cecilia 11 Re-conductor | - | - | - | - |
| 287 | 60002442 | Not in Service Conductors-WFF | 253,869 | (306,524) | - | - |
| 288 | 60002519 | Distribution Comm Improvement 2020 | - | - | 22,126 | 22,126 |
| 289 | 60002521 | Prosperity Substation | 1,809,222 | (2,188,261) | - | - |
| 290 | 60002526 | Project Ranger | 4,228,627 | (7,171,447) | - | - |
| 291 | 60002541 | Wayne Substation | - | - | 2,625 | 2,625 |
| 292 | 60002619 | Sagebrush Station-Distribution | 19 | (1,920) | (0) | (0) |
| 293 | 60002622 | ELCE12 Feeder Laterals Rebuild | 529,221 | - | 4,003,063 | 4,003,063 |
| 294 | 60002626 | Central 15 Feeder | 1,973,718 | (1,973,718) | - | - |
| 295 | 60002714 | Pachmann Substation-Distribution | - | - | - | - |
| 296 | 60002720 | Distr System Rpl Wire to Insulated | - | - | (0) | (0) |
| 297 | 60002742 | Switchgear Rpl Vermin Damage-WFF | - | - | (0) | (0) |
| 298 | 60002743 | Recloser Replacements-WFF | - | - | (0) | (0) |
| 299 | 60002822 | Tramway Substation | 6,456,299 | (705,750) | 5,750,549 | 5,750,549 |
| 300 | 60002824 | Dist Substation Ground Replacements | - | (59,514) | (0) | (0) |
| 301 | 60002920 | Outage Contingency Plan Impr-WFF | 2,729 | (538,340) | - | - |
| 302 | 60003023 | CORNELL 14 - Feeder Backbone Rebuil | 558,830 | - | 2,868,134 | 2,868,134 |
| 303 | 60003027 | Subtransm Relay Replacement 2027-28 | 4,804,657 | - | 4,804,657 | 4,804,657 |
| 304 | 60003113 | Morris 12 Feeder Rebuild | 4,247,345 | (7,997,384) | 906,429 | 906,429 |
| 305 | 60003118 | Distr Cable Testing and Replace 201 | - | - | - | - |
| 306 | 60003119 | Distr Cable Testing - Replace 2019 | - | - | (340) | (340) |
| 307 | 60003126 | Project Lola | 474,172 | (109,867) | - | - |

| | A | B | K | L | M | N |
|---|---|---|---|---|---|---|
| 1 | **Public Service Company of New Mexico** | | | | | |
| 2 | **Schedule B-4** | | | | | |
| 3 | **Construction Work In Progress** | | | | | |
| 4 | **Base Period Ending 6/30/2026** | | | | | |
| 5 | **Test Period Ending 9/30/2028** | | | | | |
| 6 | **This schedule is sponsored by PNM Witness Gutierrez** | | | | | |
| 7 | **Project #** | **Project Description** | **Expenditures Through End of Linkage** | **Clearings Through End of Linkage** | **Linkage Ending Balance Sep-27** | **Test Period Beginning Balance Oct-27** |
| 308 | 60003421 | Underground Cable-WFF | - | - | 0 | 0 |
| 309 | 60003520 | Relay Distribution IA | 59,800 | (42,623) | 17,177 | 17,177 |
| 310 | 60003620 | Van Buren Substation Metering | - | - | - | - |
| 311 | 60003621 | Distr Comm Improvement 2021-2025 | 58,011 | (228,229) | - | - |
| 312 | 60003625 | Distribution HFA Feeder Relay Rplc | 61,927 | (1,613,214) | - | - |
| 313 | 60003825 | Valencia Distribution Feeders | 5,595,890 | - | 5,595,890 | 5,595,890 |
| 314 | 60003924 | Manzanita Dist Feeders and Equip | - | - | - | - |
| 315 | 60003925 | Sandia Battery Storage 60MW-CO1 | 5,080 | (5,109) | 0 | 0 |
| 316 | 60004025 | BLM_US Forest Service ROW - Dist | 255,502 | - | 304,837 | 304,837 |
| 317 | 60004225 | Distribution Pole Replcmt Prog 2025 | 392,290 | (773,181) | - | - |
| 318 | 60004321 | Claremont Substation | 2,842 | - | 38,112 | 38,112 |
| 319 | 60004324 | Claremont Substation-Land | - | - | - | - |
| 320 | 60004325 | Zia 46kV Relay Replacement | 3,897,647 | (5,845,289) | 73,975 | 73,975 |
| 321 | 60004421 | Girard Substation | 60,802 | - | 815,428 | 815,428 |
| 322 | 60004425 | WF Enhanced Sit Awareness Co1 | - | (7,481) | 0 | 0 |
| 323 | 60004521 | Montano Substation | 19,627 | - | 263,227 | 263,227 |
| 324 | 60005219 | Manzanita | - | - | 110 | 110 |
| 325 | 60005220 | Palomas Station-Distribution | 637,512 | (7,828,318) | - | - |
| 326 | 60005240 | Progress 2 Expansion CO1 | 2,431,997 | (5,822,418) | - | - |
| 327 | 60005321 | Dist Relay Replacement 2021-2024 | - | - | 74,683 | 74,683 |
| 328 | 60005322 | Morris Substation | 160,098 | - | 2,147,119 | 2,147,119 |
| 329 | 60005324 | Distribution Relay Upgrades | 4,092,358 | (6,867,774) | 3,530,699 | 3,530,699 |
| 330 | 60005327 | Northern Osmose Pole Replacements | 2,632,761 | (3,700,133) | 0 | 0 |
| 331 | 60005328 | Snow Vista Unit 2 | - | - | - | - |
| 332 | 60005425 | Wildfire Mitigation 2025-2026 | 1,249,151 | (3,433,023) | 0 | 0 |
| 333 | 60005426 | Wildfire Mitigation 2026-2027 | 241,597 | (632,065) | - | - |
| 334 | 60005427 | Wildfire Mitigation 2027-2028 | 2,713,654 | - | 2,713,654 | 2,713,654 |
| 335 | 60005428 | Wildfire Mitigation 2028-2029 | - | - | - | - |
| 336 | 60005522 | 33.6MVA Pwr Xfmr Critical Sp 2024 | - | - | - | - |
| 337 | 60005524 | Wildfire Pole Inspect & Treat - CO1 | - | - | - | - |

| | A | B | K | L | M | N |
|---|---|---|---|---|---|---|
| 1 | **Public Service Company of New Mexico** | | | | | |
| 2 | **Schedule B-4** | | | | | |
| 3 | **Construction Work In Progress** | | | | | |
| 4 | **Base Period Ending 6/30/2026** | | | | | |
| 5 | **Test Period Ending 9/30/2028** | | | | | |
| 6 | **This schedule is sponsored by PNM Witness Gutierrez** | | | | | |
| 7 | **Project #** | **Project Description** | **Expenditures Through End of Linkage** | **Clearings Through End of Linkage** | **Linkage Ending Balance Sep-27** | **Test Period Beginning Balance Oct-27** |
| 338 | 60005527 | Joint Use 2028 | - | - | - | - |
| 339 | 60005528 | Subtransmission Relay Repl 2029-30 | - | - | - | - |
| 340 | 60005622 | 33.6MVA Pwr Xfmr Critical Sp 2025 | - | - | 14,288,014 | 14,288,014 |
| 341 | 60005624 | NM Ops Long Lead Equip Blanket CO1 | 843,481 | - | 11,312,175 | 11,312,175 |
| 342 | 60005722 | Sky Ranch 1 - Distribution | - | - | - | - |
| 343 | 60005726 | Joint Use Make Ready 2026 | 5,964,263 | (6,460,491) | - | - |
| 344 | 60005822 | Menaul Substation | 94,459 | - | 1,266,816 | 1,266,816 |
| 345 | 60005910 | Substation Equipment Replacements B | 1,582,272 | (1,449,103) | 915,105 | 915,105 |
| 346 | 60029905 | Accounting True ups | - | - | 1,045,868 | 1,045,868 |
| 347 | 60030022 | Spec Equip and Vehicles Co1 | 549,285 | (235,145) | 324,555 | 324,555 |
| 348 | 60030524 | ESC WPM Critical Backup Facility | - | - | - | - |
| 349 | 60030526 | Las Vegas Office ADA Ramp | 41,771 | (103,580) | - | - |
| 350 | 60034022 | Fleet Tool Blanket | 60,602 | (24,330) | 37,391 | 37,391 |
| 351 | 89900107 | Line Extensions - Residential | 774,733 | (418,854) | 838,570 | 838,570 |
| 352 | 89900141 | LINE EXT RESIDENTIAL 2004 | - | - | 34 | 34 |
| 353 | 89900207 | Line Extensions - Commercial | 278,662 | (111,780) | 260,350 | 260,350 |
| 354 | 89900407 | Line extensions - Misc. | (1,239) | 2,942 | 18,731 | 18,731 |
| 355 | 89900507 | Lighting | - | - | 0 | 0 |
| 356 | 89900607 | Distr. Remove & Replace | 112,737 | (237,867) | 57,761 | 57,761 |
| 357 | 89900707 | Distr. System Improvements | 276,443 | (552,485) | 163,218 | 163,218 |
| 358 | 90000207 | Line Extensions - Commercial | 46,360 | (3,804) | 42,556 | 42,556 |
| 359 | 90000607 | Distr. Remove & Replace | 20,876 | (9,249) | 11,626 | 11,626 |
| 360 | 90000707 | Distr. System Improvements | 240 | (5,627) | 1,017 | 1,017 |
| 361 | 90000807 | Services | (953) | (2,390) | (217) | (217) |
| 362 | ALA15205 | LA LUZ CROSSROADS SUB | - | - | (3,000) | (3,000) |
| 363 | NME40305 | HOLLYWOOD LINE-DIST SUB WORK | - | - | 24,147 | 24,147 |
| 364 | | **Total Distribution** | **444,993,839** | **(428,430,832)** | **204,923,402** | **204,923,402** |
| 365 | | | | | | |
| 366 | | **Transmission** | | | | |
| 367 | 09228224 | Transmission FERC Order 2023 Heatma | - | - | - | - |

| | A | B | K | L | M | N |
|---|---|---|---|---|---|---|
| 1 | **Public Service Company of New Mexico** | | | | | |
| 2 | **Schedule B-4** | | | | | |
| 3 | **Construction Work In Progress** | | | | | |
| 4 | **Base Period Ending 6/30/2026** | | | | | |
| 5 | **Test Period Ending 9/30/2028** | | | | | |
| 6 | **This schedule is sponsored by PNM Witness Gutierrez** | | | | | |
| 7 | **Project #** | **Project Description** | **Expenditures Through End of Linkage** | **Clearings Through End of Linkage** | **Linkage Ending Balance Sep-27** | **Test Period Beginning Balance Oct-27** |
| 368 | 09228225 | Co2 OT Int Sec Network Monitoring | - | - | 6 | 6 |
| 369 | 22007021 | Gila National Forest Co02 | 2,900,643 | (3,088,336) | - | - |
| 370 | 22007110 | Misc. 115kv Trans Imp Blanket | 138,389 | (89,495) | 48,893 | 48,893 |
| 371 | 22007722 | Alamogordo Substation Co2 | 13,628,410 | - | 13,628,410 | 13,628,410 |
| 372 | 64807018 | UVLS Relay-VT Upg Gavilan-Hollywood | - | - | - | - |
| 373 | 64807025 | Leyendecker Substation | - | - | - | - |
| 374 | 64807040 | Norton Capacitor | - | - | - | - |
| 375 | 64807126 | State Pen Substation | - | - | - | - |
| 376 | 64807128 | EOL Network Replacements | - | - | - | - |
| 377 | 64807140 | Tribal Fiber-WFF | - | - | 116,749 | 116,749 |
| 378 | 64807222 | WW Reactor Breaker Replacement | 2,816,277 | (3,293,265) | - | - |
| 379 | 64807225 | Failed Sta Equip Replcmt Progm 2025 | 330,314 | (1,081,104) | - | - |
| 380 | 64807226 | Rodeo Substation Rebuild CO2 | 5,055,614 | (5,055,614) | - | - |
| 381 | 64807228 | Telecom Flashwave Replace Block 4 | - | - | - | - |
| 382 | 64807319 | North Sub Water Diversion Rtng Wall | - | - | - | - |
| 383 | 64807321 | System Equipment Upgrade-WFF | 797 | (157,167) | - | - |
| 384 | 64807322 | WFF-Reconfig Tap Sub Unit 2 | - | - | 1,574,591 | 1,574,591 |
| 385 | 64807325 | Luna GT 2 GSU Transformer CO2 | - | (51,076) | - | - |
| 386 | 64807327 | Algodones Control Enclosure | 2,602,857 | - | 2,602,857 | 2,602,857 |
| 387 | 64807328 | OCB Breaker Replacement 2029 | - | - | - | - |
| 388 | 64807420 | Guadalupe 44 MVAR Reactor Regasket | - | - | - | - |
| 389 | 64807425 | Transmission Pole Replcmt Prog 2025 | 2,825 | (557,328) | - | - |
| 390 | 64807525 | WF Enhanced Sit Awareness Co2 | - | - | - | - |
| 391 | 64807527 | Claremont Building Demolition | 1,400,461 | - | 1,400,461 | 1,400,461 |
| 392 | 64807528 | West Mesa AJ Reactor Replacement | 837,109 | - | 837,109 | 837,109 |
| 393 | 64807542 | SEL Relay Project Block 1 | - | - | - | - |
| 394 | 64807625 | FERC-881 AAR | 850,893 | - | 925,216 | 925,216 |
| 395 | 64807626 | YTH Failed Breaker Replacement | 4,257,516 | (4,287,974) | - | - |
| 396 | 64807642 | Guadalupe SVC Backup Generator | 652,707 | (1,667,115) | - | - |
| 397 | 64807919 | Acoma 115kV Tap to BW Line | - | - | - | - |

| | A | B | K | L | M | N |
|---|---|---|---|---|---|---|
| 1 | **Public Service Company of New Mexico** | | | | | |
| 2 | **Schedule B-4** | | | | | |
| 3 | **Construction Work In Progress** | | | | | |
| 4 | **Base Period Ending 6/30/2026** | | | | | |
| 5 | **Test Period Ending 9/30/2028** | | | | | |
| 6 | **This schedule is sponsored by PNM Witness Gutierrez** | | | | | |
| 7 | **Project #** | **Project Description** | **Expenditures Through End of Linkage** | **Clearings Through End of Linkage** | **Linkage Ending Balance Sep-27** | **Test Period Beginning Balance Oct-27** |
| 398 | 64807920 | Prosperity Transmission Substation | - | - | (0) | (0) |
| 399 | 64808026 | Guadalupe Reactor Replacement | 2,996,976 | (2,996,976) | - | - |
| 400 | 64808126 | Ojo Reactor Replacement | 3,146,140 | (3,146,140) | - | - |
| 401 | 64808422 | Embudo Substation | - | - | - | - |
| 402 | 64808522 | Tramway Substation | 2,244,685 | (2,244,685) | - | - |
| 403 | 64808723 | Aspen Substation | 75,436 | - | 1,011,699 | 1,011,699 |
| 404 | 64808925 | BLM_US Forest Service ROW - Trans | 308,354 | - | 428,907 | 428,907 |
| 405 | 64809026 | Progress 2 Expansion CO2 | 8,965,559 | (8,965,559) | - | - |
| 406 | 64809027 | Hidden Mountain Expansion Mid-State | - | - | - | - |
| 407 | 64809028 | Transmission HFA Relay Replace 2029 | - | - | - | - |
| 408 | 64809120 | SEL Relay Project 2020 | - | - | 0 | 0 |
| 409 | 64809126 | Midstate Reactor Procurement | 7,481,944 | - | 7,481,944 | 7,481,944 |
| 410 | 64809222 | Trans Relay Replacement 2022 | - | - | 0 | 0 |
| 411 | 64809324 | Zia and MD1 Control House Replcmt | 8,403,461 | (7,452,973) | 2,707,120 | 2,707,120 |
| 412 | 64809427 | Plus Power Oso Negro | 7,239,187 | - | 7,239,187 | 7,239,187 |
| 413 | 64809527 | Transmission HFA Relay Replace 2027 | 10,036,335 | - | 10,036,335 | 10,036,335 |
| 414 | 64830023 | Spec Equip and Vehicles Co2 | 443,239 | (290,562) | 249,611 | 249,611 |
| 415 | 65006010 | San Juan Vail | - | - | 0 | 0 |
| 416 | 65006110 | ANPP Transmission blanket | 4,364,979 | (5,085,618) | 2,069,498 | 2,069,498 |
| 417 | 65006210 | SW NM Transmission Blanket | 4,420,068 | (6,207,167) | 2,090,887 | 2,090,887 |
| 418 | 65007010 | Misc. Station Improvements | 386 | (76,799) | - | - |
| 419 | 65007047 | WM 115kV Trans | 132,699 | (545,386) | - | - |
| 420 | 65007048 | Storage for Critical Spares - Power | - | - | - | - |
| 421 | 65007050 | RTU Program | 1,091,862 | (241,593) | 1,090,648 | 1,090,648 |
| 422 | 65007110 | Misc. Transmission Blanket | 6,493,648 | (6,375,355) | 1,414,290 | 1,414,290 |
| 423 | 65007119 | Asset Health Monitoring_Event Rptg | - | - | 215,548 | 215,548 |
| 424 | 65007123 | AW 115kV Structure Replace Phase 1 | 462,097 | (462,097) | - | - |
| 425 | 65007124 | Prager to Richmond Line Upgrade | 7,164,380 | - | 7,164,380 | 7,164,380 |
| 426 | 65007140 | Long Lead Material-WFF | - | - | (0) | (0) |
| 427 | 65007143 | Asset Health Mntrg-Event Rptg 24-28 | 2,105,278 | - | 2,246,359 | 2,246,359 |

| | A | B | K | L | M | N |
|---|---|---|---|---|---|---|
| 1 | **Public Service Company of New Mexico** | | | | | |
| 2 | **Schedule B-4** | | | | | |
| 3 | **Construction Work In Progress** | | | | | |
| 4 | **Base Period Ending 6/30/2026** | | | | | |
| 5 | **Test Period Ending 9/30/2028** | | | | | |
| 6 | **This schedule is sponsored by PNM Witness Gutierrez** | | | | | |
| 7 | **Project #** | **Project Description** | **Expenditures Through End of Linkage** | **Clearings Through End of Linkage** | **Linkage Ending Balance Sep-27** | **Test Period Beginning Balance Oct-27** |
| 428 | 65007150 | Star Light Interconection Expansion | (909,580) | (2,288,623) | - | - |
| 429 | 65007219 | New Sandia 115 kV Control House | 52,976 | (2,349,061) | - | - |
| 430 | 65007223 | TAG Solar and BESS Project | - | - | (0) | (0) |
| 431 | 65007224 | EPE EP Line Relay Upgrade | (433) | 232 | (0) | (0) |
| 432 | 65007226 | Pajarito 345kV Exp-Corazon Intrcnct | 7,202,489 | - | 7,287,606 | 7,287,606 |
| 433 | 65007312 | Reeves-Embudo 115kV Rebuild | 85,252 | - | 1,143,339 | 1,143,339 |
| 434 | 65007324 | NTUA Coalmine Metering | - | - | - | - |
| 435 | 65007326 | Sunbelt San Juan 345kV Interconnect | 4,232,077 | (4,409,755) | - | - |
| 436 | 65007327 | UNM Transmission Line Relocation | (4,394,865) | - | (4,394,865) | (4,394,865) |
| 437 | 65007424 | Sandia Battery Storage 60MW-CO2 | - | (11,923) | (0) | (0) |
| 438 | 65007626 | TPL1 Breaker Replacements | 4,832,333 | (140,013) | 4,692,320 | 4,692,320 |
| 439 | 65007627 | TPL1 P5 Relay Upgrades | 558,177 | - | 846,276 | 846,276 |
| 440 | 65007644 | Transm Comm Improvement 2026-2030 | 1,192,804 | (496,545) | 766,371 | 766,371 |
| 441 | 65007710 | Switch Stations Replacements IA | 1,961,823 | (3,253,532) | 427,424 | 427,424 |
| 442 | 65007713 | Trans Sub Ground Repairs Blanket | 211,842 | - | 211,842 | 211,842 |
| 443 | 65007718 | System Wide Relay Upgrades | - | - | (0) | (0) |
| 444 | 65007726 | Ojo ICLSS RAS Relay Additions | - | - | - | - |
| 445 | 65007825 | Route 66 Interconnection Expansion | - | - | (0) | (0) |
| 446 | 65007826 | Windy Lane Interconnection | (54,139) | (1,029) | 0 | 0 |
| 447 | 65007914 | Relay IA | 99,299 | (287,122) | 23,907 | 23,907 |
| 448 | 65007925 | Quail Ranch Interconnection Exp | - | - | (0) | (0) |
| 449 | 65007926 | Fox Tail Interconnection | (315,232) | (6,437) | (0) | (0) |
| 450 | 65008018 | Transmission Communication Improvem | 216 | (42,622) | - | - |
| 451 | 65008021 | Transm Comm Improvement 2021-2025 | 379,391 | (622,327) | (0) | (0) |
| 452 | 65008026 | Four Mile Mesa Interconnection | (8,085) | (742) | (0) | (0) |
| 453 | 65008117 | NERC Physical Security-WFF | - | - | - | - |
| 454 | 65008125 | Sky Ranch Interconnection Expansion | - | - | (0) | (0) |
| 455 | 65008143 | NERC Physical Security 24-28 | - | - | - | - |
| 456 | 65008217 | Line Switch Replacement | - | - | - | - |
| 457 | 65008220 | Sagebrush Station-Transmission | - | - | - | - |

| | A | B | K | L | M | N |
|---|---|---|---|---|---|---|
| 1 | **Public Service Company of New Mexico** | | | | | |
| 2 | **Schedule B-4** | | | | | |
| 3 | **Construction Work In Progress** | | | | | |
| 4 | **Base Period Ending 6/30/2026** | | | | | |
| 5 | **Test Period Ending 9/30/2028** | | | | | |
| 6 | **This schedule is sponsored by PNM Witness Gutierrez** | | | | | |
| 7 | **Project #** | **Project Description** | **Expenditures Through End of Linkage** | **Clearings Through End of Linkage** | **Linkage Ending Balance Sep-27** | **Test Period Beginning Balance Oct-27** |
| 458 | 65008225 | Fujitsu Flashware Replacements | 486,025 | - | 596,860 | 596,860 |
| 459 | 65008315 | Storm Funding Project Co02 | - | - | - | - |
| 460 | 65008325 | LANL 115kV Interconnection | 7,080,070 | (7,094,320) | - | - |
| 461 | 65008392 | West Mesa Control House Replacement | 15,695 | (16,808) | (0) | (0) |
| 462 | 65008425 | Storage for Long Lead Equipment | 145 | (14,315) | (9,474) | (9,474) |
| 463 | 65008826 | Alamogordo Land CO2 | - | - | - | - |
| 464 | 65008912 | St Cecilia Station Co2 | - | - | (0) | (0) |
| 465 | 65008922 | Pajarito-Rio Puerco 345kV ROW | - | - | 654,227 | 654,227 |
| 466 | 65008953 | Guadalupe 72 MVAR Regasket | - | - | - | - |
| 467 | 65008994 | San Juan Solar | 16,242 | (85,853) | - | - |
| 468 | 65008997 | PRC-002 Compliance DFR Project | - | - | - | - |
| 469 | 65009007 | NM Ops Long Lead Equipment Blanket | 1,534,524 | - | 20,579,953 | 20,579,953 |
| 470 | 65009014 | Second 345/115 kV Transformer YTH | - | - | - | - |
| 471 | 65009016 | Facebook Phase I-Trans Sys Upgrade | - | - | 0 | 0 |
| 472 | 65009022 | Belen Phase Shifting Transformer | - | - | - | - |
| 473 | 65009024 | Belen PST Substation Install | - | - | - | - |
| 474 | 65009025 | Pajarito to Rio Puerco 345kV Line | 29,747,197 | - | 29,747,197 | 29,747,197 |
| 475 | 65009027 | Pajarito to Prosperity 345kV Line | 17,050,322 | - | 17,050,322 | 17,050,322 |
| 476 | 65009030 | EP Line Termination | 4,317,147 | (4,317,147) | - | - |
| 477 | 65009040 | Rio Puerco-Sandia Longlead Breakers | 3,018,256 | - | 6,226,023 | 6,226,023 |
| 478 | 65009042 | Desert Station - Transmission | - | - | - | - |
| 479 | 65009050 | Zia Substation Rebuild CO2 | 7,463,302 | (3,590,251) | 4,037,397 | 4,037,397 |
| 480 | 65009116 | Huning Ranch Expansion | - | - | 72 | 72 |
| 481 | 65009124 | Sol Substation Permanent Power Tran | - | - | 4,638 | 4,638 |
| 482 | 65009126 | Central 115-12kV Substation Rebuild | 9,559,002 | (9,559,002) | - | - |
| 483 | 65009214 | Sandia 345/115kv Spare Transformer | - | - | - | - |
| 484 | 65009223 | Norton-Hernandez 115kV Rebuild | 65,964 | - | 884,656 | 884,656 |
| 485 | 65009319 | Palomas Station-Transmission | 20,949 | (4,132,465) | - | - |
| 486 | 65009321 | Project Sky Ranch 1 | - | - | - | - |
| 487 | 65009422 | Los Lunas Capacity Expansion | - | - | - | - |

| | A | B | K | L | M | N |
|---|---|---|---|---|---|---|
| 1 | **Public Service Company of New Mexico** | | | | | |
| 2 | **Schedule B-4** | | | | | |
| 3 | **Construction Work In Progress** | | | | | |
| 4 | **Base Period Ending 6/30/2026** | | | | | |
| 5 | **Test Period Ending 9/30/2028** | | | | | |
| 6 | **This schedule is sponsored by PNM Witness Gutierrez** | | | | | |
| 7 | **Project #** | **Project Description** | **Expenditures Through End of Linkage** | **Clearings Through End of Linkage** | **Linkage Ending Balance Sep-27** | **Test Period Beginning Balance Oct-27** |
| 488 | 65009424 | Valencia Substation Rebuild - Trans | 3,124,422 | (11,899,934) | - | - |
| 489 | 65009440 | Sun Lasso Interconnection | 20,835,953 | (21,058,372) | - | - |
| 490 | 65009522 | Atrisco Interconnection | - | - | - | - |
| 491 | 65009527 | Morrow Phase II | 16,728,226 | - | 16,728,226 | 16,728,226 |
| 492 | 65009540 | Bernalillo Interconnection | (33,698) | - | 928 | 928 |
| 493 | 65009640 | Mesa del Sol Infrastructure CO2 | 29,152,708 | (2,733,201) | 27,109,944 | 27,109,944 |
| 494 | 65009722 | Belen-Sun Ranch 115kV Rebuild | 103,711 | - | 1,390,899 | 1,390,899 |
| 495 | 65009725 | Broken equipment replacement fund | 428,470 | (180,280) | 248,190 | 248,190 |
| 496 | 65009727 | Pinyon Park | 14,031,553 | - | 14,031,553 | 14,031,553 |
| 497 | 65009740 | Westpointe Substation-TRN | 26,638,117 | (28,338,061) | - | - |
| 498 | 65009823 | Person-Kirtland Switching 115kV Reb | 120,026 | - | 1,609,710 | 1,609,710 |
| 499 | 65009925 | Transmission Line Pole Replcmt 2025 | 2,178,317 | - | 2,178,317 | 2,178,317 |
| 500 | 65009926 | Los Lunas Capacity Expansion Phse 5 | 62,054,925 | (2,371,140) | 70,758,828 | 70,758,828 |
| 501 | 65009950 | Los Lunas Capacity Expansion Phase4 | 270 | (53,263) | (0) | (0) |
| 502 | 65028026 | NM Wholesale MV90 Upgrade 2026 | - | 160 | 249 | 249 |
| 503 | 65028040 | FERC 881 | 572,470 | (773,311) | 4,535 | 4,535 |
| 504 | 65028125 | Comm Improvements Software | - | - | - | - |
| 505 | 65028126 | NERC PRC-027 CORE Software | 1,790,605 | - | 1,790,605 | 1,790,605 |
| 506 | 65029905 | Accounting True ups | - | - | - | - |
| 507 | 65030610 | Communications Equipment-blanket | 325,157 | (288,438) | 65,972 | 65,972 |
| 508 | 65031922 | Gen Svcs Bldg Maint Blanket-Trans | 172,855 | (109,129) | 63,726 | 63,726 |
| 509 | 65034010 | Co2 Tools & Equipment | 193,652 | (272,151) | 417 | 417 |
| 510 | 65034012 | TECH SERVICE TRANSMISSION TOOLS | 340,096 | (367,367) | 169 | 169 |
| 511 | 67607026 | San Juan Control House Improvements | 988,283 | (988,283) | - | - |
| 512 | 67607625 | San Juan Stn Switchgear Replacement | - | (20,251) | 0 | 0 |
| 513 | 67607626 | San Juan 345kV Live Tank Breakers | 976,303 | - | 976,303 | 976,303 |
| 514 | 67607640 | SJ Lightning and Backup Power 26-01 | 317,182 | - | 317,182 | 317,182 |
| 515 | 67607641 | SJ Switchyard Capital 26-02 | 93,354 | (93,354) | - | - |
| 516 | | **Total Transmission** | **389,685,667** | **(175,685,419)** | **294,632,551** | **294,632,551** |
| 517 | | | | | | |

| | A | B | K | L | M | N |
|---|---|---|---|---|---|---|
| 1 | **Public Service Company of New Mexico** | | | | | |
| 2 | **Schedule B-4** | | | | | |
| 3 | **Construction Work In Progress** | | | | | |
| 4 | **Base Period Ending 6/30/2026** | | | | | |
| 5 | **Test Period Ending 9/30/2028** | | | | | |
| 6 | **This schedule is sponsored by PNM Witness Gutierrez** | | | | | |
| 7 | **Project #** | **Project Description** | **Expenditures Through End of Linkage** | **Clearings Through End of Linkage** | **Linkage Ending Balance Sep-27** | **Test Period Beginning Balance Oct-27** |
| 518 | | **Afton** | | | | |
| 519 | 70716025 | Afton Heat Exchanger Coil Repl | - | - | - | - |
| 520 | 70716030 | Afton Compressor Upgrade Pkg 3 2028 | 755,602 | - | 755,602 | 755,602 |
| 521 | 70716043 | Afton Steam Turbine Major Inspectn | - | - | - | - |
| 522 | 70716325 | Afton High Energy Pipe Repl HRH | - | - | - | - |
| 523 | 70716425 | Afton HRSG Lower Penetration Seal | - | - | - | - |
| 524 | 70716440 | Afton ST Generator Exciter Rewind | - | - | - | - |
| 525 | 70716724 | Afton CT Generator/Rotor Fld Rplcmt | - | - | - | - |
| 526 | 70716826 | SCR Catalyst Replacement | 45,337 | (45,337) | - | - |
| 527 | 70716926 | Afton LCI Exciter Transformer | 50 | (1,669) | - | - |
| 528 | 70717126 | Afton 52 Line Breaker Relays Repl | 1,102,513 | (1,102,513) | - | - |
| 529 | 70717424 | Afton Non Outage Plant Capital 2024 | - | - | 124,691 | 124,691 |
| 530 | 70717425 | Afton Non Outage Plant Capital 2025 | - | (60,317) | - | - |
| 531 | 70717426 | Afton Non Outage Plant Capital 2026 | 163,386 | (336,524) | - | - |
| 532 | 70717427 | Afton Non Outage Plant Capital 2027 | 547,437 | (547,437) | - | - |
| 533 | 70717428 | Afton Non Outage Plant Capital 2028 | - | - | - | - |
| 534 | 70717525 | Afton Outage Plant Capital 2025 | - | - | 4,145 | 4,145 |
| 535 | 70717526 | Afton Outage Plant Capital 2026 | 924,361 | (1,027,056) | - | - |
| 536 | 70717527 | Afton Outage Plant Capital 2027 | 1,374,968 | (1,374,968) | - | - |
| 537 | 70717528 | Afton Outage Plant Capital 2028 | - | - | - | - |
| 538 | 70717925 | Afton ST Generator Rewedge | - | - | 104 | 104 |
| 539 | 70718026 | AFT Gas Turbine Major | 2,060,981 | - | 2,060,981 | 2,060,981 |
| 540 | 70728025 | Afton Oper Tech Projects 2025 | - | - | - | - |
| 541 | | **Total Afton** | **6,974,635** | **(4,495,822)** | **2,945,523** | **2,945,523** |
| 542 | | | | | | |
| 543 | | **Lordsburg** | | | | |
| 544 | 70316025 | Lordsburg Capital Improvements 2025 | - | - | - | - |
| 545 | 70316028 | Lordsburg Non Outage Plant Cap 2028 | - | - | - | - |
| 546 | 70316124 | Lordsburg RO &Evaporation Pond | - | (100,999) | 0 | 0 |
| 547 | 70316126 | Lordsburg U1 Depot Visit | 3,172,335 | (3,172,335) | - | - |

| | A | B | K | L | M | N |
|---|---|---|---|---|---|---|
| 1 | **Public Service Company of New Mexico** | | | | | |
| 2 | **Schedule B-4** | | | | | |
| 3 | **Construction Work In Progress** | | | | | |
| 4 | **Base Period Ending 6/30/2026** | | | | | |
| 5 | **Test Period Ending 9/30/2028** | | | | | |
| 6 | **This schedule is sponsored by PNM Witness Gutierrez** | | | | | |
| 7 | **Project #** | **Project Description** | **Expenditures Through End of Linkage** | **Clearings Through End of Linkage** | **Linkage Ending Balance Sep-27** | **Test Period Beginning Balance Oct-27** |
| 548 | 70316325 | Lordsburg U2 Depot Visit | 4,125,894 | (5,959,112) | - | - |
| 549 | 70316527 | Lordsburg Cap Planned Outage 2027 | 143,093 | (143,093) | - | - |
| 550 | | **Total Lordsburg** | **7,441,322** | **(9,375,539)** | **0** | **0** |
| 551 | | | | | | |
| 552 | | **Reeves** | | | | |
| 553 | 71316027 | Reeves U2 Step Up Transformer 2029 | 1,842,342 | - | 1,842,342 | 1,842,342 |
| 554 | 71316028 | Reeves U1 Step Up Transformer 2030 | - | - | - | - |
| 555 | 71316124 | Reeves U3 Boiler Waterwall Repl | - | - | - | - |
| 556 | 71316127 | Reeves U3 Boiler Economizers 2028 | 1,180,805 | (1,180,805) | - | - |
| 557 | 71316424 | Reeves Non Outage Plant Cap 2024 | - | - | 45,209 | 45,209 |
| 558 | 71316425 | Reeves Non Outage Plant Cap 2025 | - | - | - | - |
| 559 | 71316426 | Reeves Non Outage Plant Cap 2026 | 123,618 | (142,349) | - | - |
| 560 | 71316427 | Reeves Non Outage Plant Cap 2027 | 807,607 | (807,607) | - | - |
| 561 | 71316428 | Reeves Non Outage Plant Cap 2028 | - | - | - | - |
| 562 | 71316525 | Reeves Outage Plant Capital 2025 | - | - | - | - |
| 563 | 71316526 | Reeves Outage Plant Capital 2026 | 2,892 | (570,398) | - | - |
| 564 | 71316527 | Reeves Outage Plant Capital 2027 | 1,330,963 | (1,330,963) | - | - |
| 565 | 71316528 | Reeves Outage Plant Capital 2028 | - | - | - | - |
| 566 | 71316624 | Reeves U3 Turbine Generator Outage | - | (12,525) | - | - |
| 567 | 71316626 | Reeves U2 Auxiliary Transformer | 25,907 | (1,053,724) | - | - |
| 568 | 71316813 | Unit 1 Superheater replacement | - | - | (1,077) | (1,077) |
| 569 | 71316925 | Reeves U3 Generator Exciter Contrlr | - | (2,091) | (0) | (0) |
| 570 | | **Total Reeves** | **5,314,133** | **(5,100,462)** | **1,886,474** | **1,886,474** |
| 571 | | | | | | |
| 572 | | **Four Corners** | | | | |
| 573 | 71519017 | Four Corners Facility Improvements | 8,473,761 | (6,859,598) | 8,401,236 | 8,401,236 |
| 574 | 71519117 | Four Corners Facility - Switchyard | 243,998 | (102,574) | 352,728 | 352,728 |
| 575 | 71519208 | Four Corners Facility Improvements | - | - | (744) | (744) |
| 576 | 71519209 | Four Corners Facility Improvements | - | - | (3,048) | (3,048) |
| 577 | 71519210 | Four Corners Facility Improvements | 19,081 | - | 262,340 | 262,340 |

| | A | B | K | L | M | N |
|---|---|---|---|---|---|---|
| 1 | **Public Service Company of New Mexico** | | | | | |
| 2 | **Schedule B-4** | | | | | |
| 3 | **Construction Work In Progress** | | | | | |
| 4 | **Base Period Ending 6/30/2026** | | | | | |
| 5 | **Test Period Ending 9/30/2028** | | | | | |
| 6 | **This schedule is sponsored by PNM Witness Gutierrez** | | | | | |
| 7 | **Project #** | **Project Description** | **Expenditures Through End of Linkage** | **Clearings Through End of Linkage** | **Linkage Ending Balance Sep-27** | **Test Period Beginning Balance Oct-27** |
| 578 | | **Total Four Corners** | **8,736,839** | **(6,962,172)** | **9,012,512** | **9,012,512** |
| 579 | | | | | | |
| 580 | | **Palo Verde 1&2** | | | | |
| 581 | 72123410 | PV U1 | 3,913,224 | (4,306,585) | 984,312 | 984,312 |
| 582 | 72223410 | PV U2 | 9,094,733 | (682,599) | 15,366,831 | 15,366,831 |
| 583 | | **Total Palo Verde 1&2** | **13,007,957** | **(4,989,184)** | **16,351,143** | **16,351,143** |
| 584 | | | | | | |
| 585 | | **Palo Verde 3** | | | | |
| 586 | 72323410 | PV U3 | 9,343,323 | (8,090,623) | 5,273,750 | 5,273,750 |
| 587 | | **Total Palo Verde 3** | **9,343,323** | **(8,090,623)** | **5,273,750** | **5,273,750** |
| 588 | | | | | | |
| 589 | | **Palo Verde Common** | | | | |
| 590 | 72423410 | PV common | 9,526,468 | (4,418,637) | 18,113,720 | 18,113,720 |
| 591 | 72523410 | PV water reclamation | 4,930,848 | (1,002,258) | 6,080,031 | 6,080,031 |
| 592 | | **Total Palo Verde Common** | **14,457,317** | **(5,420,895)** | **24,193,751** | **24,193,751** |
| 593 | | | | | | |
| 594 | | **Luna** | | | | |
| 595 | 74416021 | Luna Capital Improvements 2021 | - | - | 62,827 | 62,827 |
| 596 | 74416024 | Luna GT1 Flexibility Upgrade | - | - | - | - |
| 597 | 74416025 | Luna Capital Improvements 2025 | - | - | - | - |
| 598 | 74416026 | Luna Capital Improvements 2024 | - | - | - | - |
| 599 | 74416027 | Luna Capital Planned Outage 2027 | 609,401 | (208,843) | 400,558 | 400,558 |
| 600 | 74416028 | Luna Capital Improvements 2028 | - | - | - | - |
| 601 | 74416126 | Luna Capital Improvements 2026 | 369,210 | (616,933) | - | - |
| 602 | 74416127 | Luna Capital Improvement 2027 | 912,325 | (119,768) | 792,557 | 792,557 |
| 603 | 74416128 | Luna Capital Planned Outage 2028 | - | - | - | - |
| 604 | 74416415 | Luna Capital Improvements 2019 | - | - | - | - |
| 605 | 74417021 | Luna Capital Planned Outage 2021 | - | - | (64,075) | (64,075) |
| 606 | 74417024 | Luna Capital Planned Outage 2024 | - | - | - | - |
| 607 | 74417025 | Luna Capital Planned Outage 2025 | - | (45,449) | (0) | (0) |

| | A | B | K | L | M | N |
|---|---|---|---|---|---|---|
| 1 | **Public Service Company of New Mexico** | | | | | |
| 2 | **Schedule B-4** | | | | | |
| 3 | **Construction Work In Progress** | | | | | |
| 4 | **Base Period Ending 6/30/2026** | | | | | |
| 5 | **Test Period Ending 9/30/2028** | | | | | |
| 6 | **This schedule is sponsored by PNM Witness Gutierrez** | | | | | |
| 7 | **Project #** | **Project Description** | **Expenditures Through End of Linkage** | **Clearings Through End of Linkage** | **Linkage Ending Balance Sep-27** | **Test Period Beginning Balance Oct-27** |
| 608 | 74417123 | Luna Capital Planned Outage 2023 | - | - | - | - |
| 609 | 74417125 | Luna GT 2 GSU Transformer Replaceme | (742,806) | (787,174) | - | - |
| 610 | 74417126 | Luna Capital Planned Outage 2026 | 435,101 | (755,673) | - | - |
| 611 | 74418029 | Luna GT1 Hot Gas Path Inspection | - | - | - | - |
| 612 | | **Total Luna** | **1,583,229** | **(2,533,839)** | **1,191,867** | **1,191,867** |
| 613 | | | | | | |
| 614 | | **San Juan** | | | | |
| 615 | 76116001 | CBI SJ GEN ENGR FORECAST | - | - | (0) | (0) |
| 616 | 76116011 | CBI SJ GEN ENGR | - | - | 0 | 0 |
| 617 | 76616025 | Common Limestone Area Instrument | - | - | (399) | (399) |
| 618 | 76616029 | Common Brine Concentrator 4 Pipe Re | - | - | (2,442) | (2,442) |
| 619 | 76616311 | sj com pi data historian | - | - | (82) | (82) |
| 620 | 78916224 | SJGS Process Pond Closures | 0 | (3) | - | - |
| 621 | | **Total San Juan** | **0** | **(3)** | **(2,923)** | **(2,923)** |
| 622 | | | | | | |
| 623 | | **La Luz/Peaking Generation Station** | | | | |
| 624 | 75216126 | La Luz SB-310 Compressor Blade Repl | 547,892 | (547,892) | - | - |
| 625 | 75216221 | La Luz Spare GSU Transformer | - | - | 929,869 | 929,869 |
| 626 | 75216425 | La Luz Non Outage Plant Capitl 2025 | - | - | 33,635 | 33,635 |
| 627 | 75216427 | La Luz Non Outage Plant Capitl 2027 | 702,467 | (628,709) | 73,758 | 73,758 |
| 628 | 75216428 | La Luz Non Outage Plant Capitl 2028 | - | - | - | - |
| 629 | 75216625 | La Luz Mark VI E Turbine Controls | 759,588 | (1,417,954) | - | - |
| 630 | 75216627 | La Luz Outage Plant Capital 2027 | - | - | - | - |
| 631 | 75216725 | La Luz Balance of Plant Controls | 683,708 | (1,360,331) | - | - |
| 632 | 75228025 | La Luz Oper Tech Projects 2025 | - | - | 89,328 | 89,328 |
| 633 | | **Total La Luz/Peaking Generation Station** | **2,693,654** | **(3,954,886)** | **1,126,590** | **1,126,590** |
| 634 | | | | | | |
| 635 | | **Delta/Rio Bravo** | | | | |
| 636 | 04616027 | Rio Bravo Mark VI E Turbine Control | 1,677,262 | - | 1,684,965 | 1,684,965 |
| 637 | 04616127 | Rio Bravo Balance of Plant Controls | 562,523 | (572,281) | 4,888 | 4,888 |

| | A | B | K | L | M | N |
|---|---|---|---|---|---|---|
| 1 | **Public Service Company of New Mexico** | | | | | |
| 2 | **Schedule B-4** | | | | | |
| 3 | **Construction Work In Progress** | | | | | |
| 4 | **Base Period Ending 6/30/2026** | | | | | |
| 5 | **Test Period Ending 9/30/2028** | | | | | |
| 6 | **This schedule is sponsored by PNM Witness Gutierrez** | | | | | |
| 7 | **Project #** | **Project Description** | **Expenditures Through End of Linkage** | **Clearings Through End of Linkage** | **Linkage Ending Balance Sep-27** | **Test Period Beginning Balance Oct-27** |
| 638 | 04616227 | Rio Bravo Turbine Major 2029 | 1,563,948 | - | 1,563,948 | 1,563,948 |
| 639 | 04616327 | Rio Bravo Compressor Upgrade Pkg 3 | 837,075 | - | 837,075 | 837,075 |
| 640 | 04616425 | Rio Bravo Non Outage Plant Cap 2025 | - | - | - | - |
| 641 | 04616427 | Rio Bravo Non Outage Plant Cap 2027 | 845,664 | (845,664) | - | - |
| 642 | 04616428 | Rio Bravo Non Outage Plant Cap 2028 | - | - | - | - |
| 643 | 04616524 | Rio Bravo Outage Plant Capital 2024 | - | - | 2,020 | 2,020 |
| 644 | 04616525 | Rio Bravo Outage Plant Capital 2025 | - | - | 81,658 | 81,658 |
| 645 | 04616527 | Rio Bravo Outage Plant Capital 2027 | 657,903 | (657,903) | - | - |
| 646 | 04616528 | Rio Bravo Outage Plant Capital 2028 | - | - | - | - |
| 647 | 04616725 | Rio Bravo Emergency Hot Gas Path | - | - | - | - |
| 648 | 04628024 | Rio Bravo Oper Tech Projects 2024 | - | - | - | - |
| 649 | 04630525 | Rio Bravo Sfty Secrity Faclity 2025 | - | - | - | - |
| 650 | | **Total Delta/Rio Bravo** | **6,144,376** | **(2,075,847)** | **4,174,555** | **4,174,555** |
| 651 | | | | | | |
| 652 | | **Bulk Power Building Allocation** | | | | |
| 653 | 35730525 | WPM Plumbing Improvement | - | - | - | - |
| 654 | 35730526 | 2026 Aztec Building A Contingency | 94,678 | (94,678) | - | - |
| 655 | 35730527 | 2027 Aztec Building A Contingency | 70,903 | (70,903) | - | - |
| 656 | 35730528 | 2028 Aztec Building A Contingency | - | - | - | - |
| 657 | 35730924 | Gen Svcs Bldg Maint Aztec Bldg A | - | - | - | - |
| 658 | 35730925 | 25-01 Aztec Building A Contingency | - | - | - | - |
| 659 | 35732012 | Aztec Building renovations | - | - | (716) | (716) |
| 660 | 35732026 | Aztec A 2nd Floor Workstations | 111,092 | (111,092) | - | - |
| 661 | | **Total Bulk Power Building Allocation** | **276,674** | **(276,674)** | **(716)** | **(716)** |
| 662 | | | | | | |
| 663 | | **Battery Storage** | | | | |
| 664 | 70518222 | Dist Battery Capacity Expand Phs I | - | - | 1,662 | 1,662 |
| 665 | 70518223 | Dist Battery Capacity Expand Phs 2 | 75,406,845 | (75,406,845) | - | - |
| 666 | 70518224 | Sandia Battery Storage 60MW | 3,382,089 | (10,059,702) | - | - |
| 667 | 70518526 | Sunbelt Solar and Storage Facility | 195,239,666 | (249,395,698) | 1,001,589 | 1,001,589 |

| | A | B | K | L | M | N |
|---|---|---|---|---|---|---|
| 1 | **Public Service Company of New Mexico** | | | | | |
| 2 | **Schedule B-4** | | | | | |
| 3 | **Construction Work In Progress** | | | | | |
| 4 | **Base Period Ending 6/30/2026** | | | | | |
| 5 | **Test Period Ending 9/30/2028** | | | | | |
| 6 | **This schedule is sponsored by PNM Witness Gutierrez** | | | | | |
| 7 | **Project #** | **Project Description** | **Expenditures Through End of Linkage** | **Clearings Through End of Linkage** | **Linkage Ending Balance Sep-27** | **Test Period Beginning Balance Oct-27** |
| 668 | 70528028 | Tech Doc Management 2028 | - | - | - | - |
| 669 | | **Total Battery Storage** | **274,028,600** | **(334,862,245)** | **1,003,252** | **1,003,252** |
| 670 | | | | | | |
| 671 | | **Production Related** | | | | |
| 672 | 09328022 | ETRM Upgrade or Replace 2023 | - | - | - | - |
| 673 | 09328026 | ETRM Data Svcs Implement 2026 | 26,669 | (115,603) | 636 | 636 |
| 674 | 09328122 | Co 3 - CPR Corp Security 2022 | - | - | - | - |
| 675 | 70028023 | Enterprise Investmt Optimztn Softwr | - | - | (0) | (0) |
| 676 | 70028025 | Enterprise Investment Optimization | (2,314,400) | 2,338,896 | 24,496 | 24,496 |
| 677 | 70028028 | Port Opt Copperleaf 2028 | - | - | - | - |
| 678 | 70028125 | Wildfire PSPS Decision Making | 932,550 | - | 932,550 | 932,550 |
| 679 | 70028224 | Documentation System Upgrades | 131,747 | (131,747) | - | - |
| 680 | 70028225 | Port Opt Copperleaf 2025 | - | - | - | - |
| 681 | 70028227 | Data Historian SoftwareLicense 2027 | 1,478,888 | - | 1,478,888 | 1,478,888 |
| 682 | 70028327 | Adv Analytics Process Mgmt SEEQ 27 | 882,494 | (882,494) | - | - |
| 683 | 70028524 | Arrows DOE Phase 1 | - | - | - | - |
| 684 | 70029905 | Accounting True ups | - | - | - | - |
| 685 | 73128224 | Extended Day Ahead Market-EDAM 2025 | 9,265,903 | - | 13,909,079 | 13,909,079 |
| 686 | 73128324 | GHG Cost to Bidding and GenTrader | - | - | - | - |
| 687 | | **Total Production Related** | **10,403,851** | **1,209,052** | **16,345,649** | **16,345,649** |
| 688 | | | | | | |
| 689 | | Undistributed Balances-184 Clearing Account | - | - | 18,332,977 | 18,332,977 |
| 690 | | Retirement Work in Progress-108 Account | 44,589,639 | (46,305,066) | 28,822,924 | 28,822,924 |
| 691 | | | | | | |
| 692 | | **Total PNM** | **1,239,675,057** | **(1,037,350,455)** | **630,213,277** | **630,213,277** |
| 693 | | Plant additions not in CWIP: | | | | |
| 694 | | ARO Asset Four Corners (FERC 317) | | | | |
| 695 | | ARO Asset Lordsburg (FERC 347) | | | | |
| 696 | | Less CWIP Clearings to Account 105100: | | | | |
| 697 | | New Sandia 115 kV Control House | | | | |

| | A | B | K | L | M | N |
|---|---|---|---|---|---|---|
| 1 | **Public Service Company of New Mexico** | | | | | |
| 2 | **Schedule B-4** | | | | | |
| 3 | **Construction Work In Progress** | | | | | |
| 4 | **Base Period Ending 6/30/2026** | | | | | |
| 5 | **Test Period Ending 9/30/2028** | | | | | |
| 6 | **This schedule is sponsored by PNM Witness Gutierrez** | | | | | |
| 7 | **Project #** | **Project Description** | **Expenditures Through End of Linkage** | **Clearings Through End of Linkage** | **Linkage Ending Balance Sep-27** | **Test Period Beginning Balance Oct-27** |
| 698 | | West Mesa Control House Replacement | | | | |
| 699 | | Less CWIP Clearings Deferred to a Future Rate Case | | | | |
| 700 | | Mesa Del Sol Infrastructure Projects | | | | |
| 701 | | Grid Mod - Dist Planning & Engineer | | | | |
| 702 | | Less Retirement Work in Progress-108 Account | | | | |
| 703 | | **Schedule B-1 Total Plant in Service - PNM Additions** | | | | |
| 704 | | | | | | |
| 705 | | **Corporate** | | | | |
| 706 | 91128024 | Strategic Finance Replacement | - | - | - | - |
| 707 | 91128027 | PowerPlan Upg or Replace 2028 | - | - | - | - |
| 708 | 91128028 | MV90 Retail Upg 2028 | - | - | - | - |
| 709 | 91128125 | PowerPlan Upgrade 2025 | - | - | - | - |
| 710 | 91128325 | Treasury Management System | 251,273 | (620,935) | 8,966 | 8,966 |
| 711 | 91128525 | PowerPlan Licensing Uplift 2025 | - | - | - | - |
| 712 | 94128026 | NERC CIP Program-2026 | 47,731 | (47,731) | - | - |
| 713 | 94128120 | ArcFM Upgrade to Utility Network | 926,699 | (2,741,528) | 16,651 | 16,651 |
| 714 | 94128225 | OT Int. Sec. Network Monitoring | - | - | - | - |
| 715 | 94128325 | Fortress ELA 2025 | - | - | - | - |
| 716 | 94128328 | NERC CIP GRC ELA 2028 | - | - | - | - |
| 717 | 94128343 | Transient Cyber Assets Upgrade | - | - | - | - |
| 718 | 94128425 | NERC GRC Software 2025 | 43,341 | (546,948) | 14,589 | 14,589 |
| 719 | 94128525 | Esri ELA 2025 | - | - | - | - |
| 720 | 94128528 | Fortra FIM Tripwire ELA 2028 | - | - | - | - |
| 721 | 94130522 | Santa Fe Office Parking Lot | - | - | - | - |
| 722 | 95128124 | OT Display Wall Upg 2024 | - | - | - | - |
| 723 | 95128127 | ColdFusion Upg 2027 | 134,492 | - | 134,492 | 134,492 |
| 724 | 95128144 | CPR OT Assets Annual Refresh 2024 | - | - | (0) | (0) |
| 725 | 95128145 | CPR OT Assets Annual Refresh 2025 | - | - | - | - |
| 726 | 95128146 | CPR OT Assets Annual Refresh 2026 | 572,955 | (983,282) | 5,165 | 5,165 |
| 727 | 95128147 | CPR OT Assets Annual Refresh 2027 | 645,116 | - | 645,116 | 645,116 |

| | A | B | K | L | M | N |
|---|---|---|---|---|---|---|
| 1 | **Public Service Company of New Mexico** | | | | | |
| 2 | **Schedule B-4** | | | | | |
| 3 | **Construction Work In Progress** | | | | | |
| 4 | **Base Period Ending 6/30/2026** | | | | | |
| 5 | **Test Period Ending 9/30/2028** | | | | | |
| 6 | **This schedule is sponsored by PNM Witness Gutierrez** | | | | | |
| 7 | **Project #** | **Project Description** | **Expenditures Through End of Linkage** | **Clearings Through End of Linkage** | **Linkage Ending Balance Sep-27** | **Test Period Beginning Balance Oct-27** |
| 728 | 95128148 | CPR OT Assets Annual Refresh 2028 | - | - | - | - |
| 729 | 96828045 | KnowBe4 ELA 2025-2028 | - | - | - | - |
| 730 | 96828046 | ZenGRC ELA 2026 | - | (223,456) | 560 | 560 |
| 731 | 96828047 | IBM DataStage ETL Upg 2027 | 142,982 | - | 142,982 | 142,982 |
| 732 | 96828055 | Dataminr Phys Sec ELA 2025 | - | - | - | - |
| 733 | 96828057 | 3rd Party Risk Mgmt Ph 1 2027 | 342,226 | - | 342,226 | 342,226 |
| 734 | 96828058 | Arctic Wolf ELA 2028 | - | - | - | - |
| 735 | 96828066 | CrowdStrike ELA 2026 | 1,594,466 | (1,594,466) | - | - |
| 736 | 96828067 | Segmentation Network and ACI 2027 | 144,228 | - | 144,228 | 144,228 |
| 737 | 96828068 | Privileged Access Mgmt ELA 2028 | - | - | - | - |
| 738 | 96828086 | Network Access Control (NAC) 2026 | 84,232 | (84,232) | - | - |
| 739 | 96828123 | MS Enterprise License Agrmt 2023 | - | - | - | - |
| 740 | 96828145 | Corporate Applications Prog 2025 | - | (217,029) | 5,764 | 5,764 |
| 741 | 96828155 | Tripwire ELA 2025 | - | - | - | - |
| 742 | 96828157 | AI Detect and Correl Ph 1 2027 | 329,858 | - | 329,858 | 329,858 |
| 743 | 96828165 | VMWare Virtual Desk & App ELA 2025 | - | - | - | - |
| 744 | 96828167 | Segmentation NSX 2027 | 360,781 | - | 360,781 | 360,781 |
| 745 | 96828185 | Web Application Modernization 2025 | - | - | - | - |
| 746 | 96828224 | MS SharePoint Upgrade 2025 | 3,001 | (1,748) | 1,253 | 1,253 |
| 747 | 96828226 | MS Enterprise License Agrmt 2026 | - | 23,064 | 23,064 | 23,064 |
| 748 | 96828228 | CISCO SmartNet (HW) ELA 2028 | - | - | - | - |
| 749 | 96828247 | Disaster Recovery Refresh (HW) 2027 | 969,131 | - | 969,131 | 969,131 |
| 750 | 96828255 | Blackbaud ELA 2025 | - | - | - | - |
| 751 | 96828256 | Tenable ELA 2026 | - | - | - | - |
| 752 | 96828257 | Agentic AI SOC 2027 | 207,809 | - | 207,809 | 207,809 |
| 753 | 96828263 | Disaster Recover Refr (HW) | - | - | - | - |
| 754 | 96828267 | VMware vRealize ELA 2027 | - | - | - | - |
| 755 | 96828285 | CyberArk PAM Upgrade | - | - | - | - |
| 756 | 96828286 | Security Mitigation Program 2026 | 1,745,873 | (2,821,682) | 18,394 | 18,394 |
| 757 | 96828346 | Corporate Applications Prog 2026 | 616,050 | (820,516) | 1,595 | 1,595 |

| | A | B | K | L | M | N |
|---|---|---|---|---|---|---|
| 1 | **Public Service Company of New Mexico** | | | | | |
| 2 | **Schedule B-4** | | | | | |
| 3 | **Construction Work In Progress** | | | | | |
| 4 | **Base Period Ending 6/30/2026** | | | | | |
| 5 | **Test Period Ending 9/30/2028** | | | | | |
| 6 | **This schedule is sponsored by PNM Witness Gutierrez** | | | | | |
| 7 | **Project #** | **Project Description** | **Expenditures Through End of Linkage** | **Clearings Through End of Linkage** | **Linkage Ending Balance Sep-27** | **Test Period Beginning Balance Oct-27** |
| 758 | 96828347 | Corporate Applications Prog 2027 | 133,512 | - | 133,512 | 133,512 |
| 759 | 96828357 | CUCM Upgrade 2027 | 213,948 | - | 213,948 | 213,948 |
| 760 | 96828367 | Service Suite Upg 2027 | 743,781 | - | 743,781 | 743,781 |
| 761 | 96828385 | Oracle ELA and Azure Cloud 2025 | - | - | - | - |
| 762 | 96828386 | AI Program 2026 | 2,561,486 | (2,594,694) | 1,459 | 1,459 |
| 763 | 96828387 | AI Program 2027 | 1,842,048 | - | 1,842,048 | 1,842,048 |
| 764 | 96828388 | AI Program 2028 | - | - | - | - |
| 765 | 96828425 | CPR Servers Storage 2025 | - | (28,000) | (0) | (0) |
| 766 | 96828426 | CPR Servers Storage 2026 | 1,028,839 | (1,242,139) | 5,617 | 5,617 |
| 767 | 96828427 | CPR Servers Storage 2027 | 1,056,994 | - | 1,056,994 | 1,056,994 |
| 768 | 96828428 | CPR Servers Storage 2028 | - | - | - | - |
| 769 | 96828452 | Dense Wavelength Div Multi (DWDM) | - | - | - | - |
| 770 | 96828457 | DC OS Lifecycle Mgmt 2027 | 52,118 | - | 52,118 | 52,118 |
| 771 | 96828485 | Gigamon ELA 2025 - 2028 | - | - | - | - |
| 772 | 96828486 | Oracle Java License True Up 2026 | - | - | - | - |
| 773 | 96828524 | CPR PCs 2024 | - | - | - | - |
| 774 | 96828525 | CPR PCs 2025 | - | 3 | (0) | (0) |
| 775 | 96828526 | CPR PCs 2026 | (144,270) | (1,477,194) | 32,127 | 32,127 |
| 776 | 96828527 | CPR PCs 2027 | 917,425 | - | 917,425 | 917,425 |
| 777 | 96828528 | CPR PCs 2028 | - | - | - | - |
| 778 | 96828548 | Dark Trace ELA 2028 | - | - | - | - |
| 779 | 96828567 | Shadow IT Alerting and ID Ph 1 2027 | 274,206 | - | 274,206 | 274,206 |
| 780 | 96828585 | Netwrix ELA 2026 | - | - | - | - |
| 781 | 96828645 | CPR Cybersecurity 2025 | - | - | - | - |
| 782 | 96828646 | CPR Cybersecurity 2026 | (301,974) | (797,566) | 2,754 | 2,754 |
| 783 | 96828647 | CPR Cybersecurity 2027 | 1,071,825 | - | 1,071,825 | 1,071,825 |
| 784 | 96828648 | CPR Cybersecurity 2028 | - | - | - | - |
| 785 | 96828657 | DC Storage Backup Modern 2027 | 108,352 | - | 108,352 | 108,352 |
| 786 | 96828666 | Dataminr Cyber ELA 2026 | 251,520 | (251,520) | - | - |
| 787 | 96828667 | System Process App Seg Ph 1 2027 | 324,697 | - | 324,697 | 324,697 |

| | A | B | K | L | M | N |
|---|---|---|---|---|---|---|
| 1 | **Public Service Company of New Mexico** | | | | | |
| 2 | **Schedule B-4** | | | | | |
| 3 | **Construction Work In Progress** | | | | | |
| 4 | **Base Period Ending 6/30/2026** | | | | | |
| 5 | **Test Period Ending 9/30/2028** | | | | | |
| 6 | **This schedule is sponsored by PNM Witness Gutierrez** | | | | | |
| 7 | **Project #** | **Project Description** | **Expenditures Through End of Linkage** | **Clearings Through End of Linkage** | **Linkage Ending Balance Sep-27** | **Test Period Beginning Balance Oct-27** |
| 788 | 96828686 | ALM Upg and ELA 2026 | - | - | 623 | 623 |
| 789 | 96828725 | Cybersecurity Program 2025 | - | - | - | - |
| 790 | 96828748 | Adobe Licensing Agreement 2028 | - | - | - | - |
| 791 | 96828757 | Email Resil Modern Sec Ph 1 2027 | 165,976 | - | 165,976 | 165,976 |
| 792 | 96828764 | Gartner Support Contracts 2025 | - | - | 417,120 | 417,120 |
| 793 | 96828765 | Automation Anywhere ELA 2025 | - | - | - | - |
| 794 | 96828767 | TDM Decommissioning 2027 | 360,938 | - | 360,938 | 360,938 |
| 795 | 96828786 | Gigamon Co-Termed ELA 2026 | 570,834 | (570,943) | 0 | 0 |
| 796 | 96828825 | Infrast-New Capabilities Prgrm 2025 | - | - | - | - |
| 797 | 96828846 | Infrast-New Capabilities Prgrm 2026 | 147,283 | (232,133) | 1,296 | 1,296 |
| 798 | 96828857 | Endpoint Hardening Ph 1 2027 | 239,751 | - | 239,751 | 239,751 |
| 799 | 96828867 | Texas Internet Egress via BGP 2027 | 108,070 | - | 108,070 | 108,070 |
| 800 | 96828868 | PNM Foundation Blackbaud ELA 2028 | - | - | - | - |
| 801 | 96828926 | Lifecycle Mgmt-Infra Prgrm 2026 | 1,042,508 | (1,990,462) | 9,458 | 9,458 |
| 802 | 96828927 | Lifecycle Mgmt-Infra Prgrm 2027 | 157,865 | - | 157,865 | 157,865 |
| 803 | 96828945 | Telecom-New Capabilities Prgrm 2025 | - | - | - | - |
| 804 | 96828946 | Tech Adv-Future Cap Program 2026 | 493,719 | (493,719) | - | - |
| 805 | 96828947 | Tech Adv-Future Cap Program 2027 | - | - | - | - |
| 806 | 96828957 | Enhance Auth Modern Ph 1 2027 | 311,754 | - | 311,754 | 311,754 |
| 807 | 96828965 | Tibco Platform Upg 2025 | 846,045 | (1,050,074) | 3,754 | 3,754 |
| 808 | 96828966 | Blue Snow ELA 2026 | - | (77,039) | 193 | 193 |
| 809 | 96828967 | VMware Cloud Found Dev 2027 | 173,796 | - | 173,796 | 173,796 |
| 810 | 96829026 | Telecom-New Capabilities Prgrm 2026 | 1,400,721 | (1,407,566) | 33 | 33 |
| 811 | 96829048 | CyberArk PAM Upgrade 2028 | - | - | - | - |
| 812 | 96829057 | Gartner Support Contracts 2027 | 285,965 | - | 285,965 | 285,965 |
| 813 | 96829065 | NH360 Portfolio Insights ELA | - | - | - | - |
| 814 | 96829066 | SigmaFlow Upg 2026 | 260,823 | (260,823) | - | - |
| 815 | 96829067 | Threat Exp Mgmt Mod Ph 1 2027 | 252,641 | - | 252,641 | 252,641 |
| 816 | 96829068 | Optiv Saviynt True Up 2028 | - | - | - | - |
| 817 | 96829127 | Cisco Security ELA 2027 | 7,800,987 | (7,800,987) | - | - |

| | A | B | K | L | M | N |
|---|---|---|---|---|---|---|
| 1 | **Public Service Company of New Mexico** | | | | | |
| 2 | **Schedule B-4** | | | | | |
| 3 | **Construction Work In Progress** | | | | | |
| 4 | **Base Period Ending 6/30/2026** | | | | | |
| 5 | **Test Period Ending 9/30/2028** | | | | | |
| 6 | **This schedule is sponsored by PNM Witness Gutierrez** | | | | | |
| 7 | **Project #** | **Project Description** | **Expenditures Through End of Linkage** | **Clearings Through End of Linkage** | **Linkage Ending Balance Sep-27** | **Test Period Beginning Balance Oct-27** |
| 818 | 96829146 | Ent Firewall Renewal 2026 | 795,741 | (795,741) | - | - |
| 819 | 96829157 | Lewisville Network Refresh 2027 | 231,945 | - | 231,945 | 231,945 |
| 820 | 96829165 | AI Program 2025 | - | - | (0) | (0) |
| 821 | 96829228 | NetApp Banner Storage ELA 2028 | - | - | - | - |
| 822 | 96829247 | Broadcom ELA 2027 | 10,000,000 | (10,000,000) | - | - |
| 823 | 96829256 | Denodo BI ELA 2026 | - | - | - | - |
| 824 | 96829257 | Lewisville Load Balancer F5 2027 | 155,917 | - | 155,917 | 155,917 |
| 825 | 96829265 | VMware vCenter, vSphere ELA 2025 | - | - | - | - |
| 826 | 96829266 | Web App Mod Prog 2026 | 159,936 | (159,936) | - | - |
| 827 | 96829348 | Pathlock ELA 2028 | - | - | - | - |
| 828 | 96829357 | Lewisville Sec Stack Modern 2027 | 216,496 | - | 216,496 | 216,496 |
| 829 | 96829358 | Fortress ELA 2028 | - | - | - | - |
| 830 | 96829367 | CPR Crisis Resilience 2027 | 111,764 | - | 111,764 | 111,764 |
| 831 | 96829427 | Splunk IT Core Enterprise ELA 2027 | 4,968,674 | (4,968,674) | - | - |
| 832 | 96829444 | CISCO Ent Lic Agreement 2024 | - | - | - | - |
| 833 | 96829446 | CPR Corp Security 2026 | 536,962 | (794,877) | 2,860 | 2,860 |
| 834 | 96829447 | CPR Corp Security 2027 | 501,875 | - | 501,875 | 501,875 |
| 835 | 96829448 | CPR Corp Security 2028 | - | - | - | - |
| 836 | 96829457 | Network Perim File Threat 2027 | 867,508 | - | 867,508 | 867,508 |
| 837 | 96829527 | eDOCS DM Tech Stack Upgrade 2027 | 800,867 | - | 800,867 | 800,867 |
| 838 | 96829528 | SETA KnowBe4 ELA 2028 | - | - | - | - |
| 839 | 96829557 | Network Sec Infra Auto 2027 | 72,462 | - | 72,462 | 72,462 |
| 840 | 96829558 | Gartner Support Contracts 2028 | - | - | - | - |
| 841 | 96829565 | ITSM 2025 SAM Pro and Integrations | - | - | - | - |
| 842 | 96829625 | CPR Telecom Blanket 2025 | - | - | - | - |
| 843 | 96829627 | Tanium ELA 2027 | 498,702 | (498,702) | - | - |
| 844 | 96829628 | Oracle ELA 2028 | - | - | - | - |
| 845 | 96829646 | CPR Telecom Blanket 2026 | 652,965 | (950,883) | 2,184 | 2,184 |
| 846 | 96829647 | CPR Telecom Blanket 2027 | 894,569 | - | 894,569 | 894,569 |
| 847 | 96829648 | CPR Telecom Blanket 2028 | - | - | - | - |

| | A | B | K | L | M | N |
|---|---|---|---|---|---|---|
| 1 | **Public Service Company of New Mexico** | | | | | |
| 2 | **Schedule B-4** | | | | | |
| 3 | **Construction Work In Progress** | | | | | |
| 4 | **Base Period Ending 6/30/2026** | | | | | |
| 5 | **Test Period Ending 9/30/2028** | | | | | |
| 6 | **This schedule is sponsored by PNM Witness Gutierrez** | | | | | |
| 7 | **Project #** | **Project Description** | **Expenditures Through End of Linkage** | **Clearings Through End of Linkage** | **Linkage Ending Balance Sep-27** | **Test Period Beginning Balance Oct-27** |
| 848 | 96829665 | Enterprise Backup Replacement 2025 | - | - | - | - |
| 849 | 96829666 | Microsoft CSP ELA and Azure 2026 | 1,507,644 | (1,507,644) | - | - |
| 850 | 96829728 | ServiceNow ELA 2028 | - | - | - | - |
| 851 | 96829757 | Traka ELA 2027 | 69,223 | (69,223) | - | - |
| 852 | 96829765 | Adobe Licensing Agreement 2025 | - | - | - | - |
| 853 | 96829766 | Enterprise Data Storage Refr 2026 | 1,632,695 | (1,691,966) | 177 | 177 |
| 854 | 96829825 | RedHat ELA 2025 | - | - | - | - |
| 855 | 96829827 | Infoblox ELA 2027 | 167,024 | - | 167,024 | 167,024 |
| 856 | 96829845 | DFIN Collaboration ELA 2026 | 1,991,258 | (1,991,258) | - | - |
| 857 | 96829857 | Privil Sys Session Mgmt Ph 1 2027 | 274,206 | - | 274,206 | 274,206 |
| 858 | 96829865 | Windows 11 2025 | - | - | - | - |
| 859 | 96829866 | Cognos Upgrade 2026 | - | 1,438 | 1,438 | 1,438 |
| 860 | 96829926 | Security Video System 2026 | 300,457 | (300,457) | - | - |
| 861 | 96829928 | Mythos-Ready AI Cyber Def Prog 2028 | - | - | - | - |
| 862 | 96829945 | CPR Corp Security 2025 | - | - | - | - |
| 863 | 96829957 | RSM Qualys Portal PCI Scans 2027 | 50,309 | - | 50,309 | 50,309 |
| 864 | 96829966 | Identity Access Mgmt (IAM) 2026 | 948,026 | (2,823,503) | 21,428 | 21,428 |
| 865 | 96830525 | Aztec Data Center Chillers | - | - | - | - |
| 866 | 96830526 | Data Center Cooling Towers Repl | 499,699 | (499,699) | - | - |
| 867 | 96830625 | Aztec DC Office Improvements 2025 | - | - | (0) | (0) |
| 868 | 96830626 | Data Center BTS Help Desk Cubicles | - | - | - | - |
| 869 | 96830725 | Data Center UPS Battery Backups | - | - | - | - |
| 870 | 96830726 | Data Center NOC Split Systems | - | - | - | - |
| 871 | 96830826 | Data Center Shed and Paving | - | - | - | - |
| 872 | 96831007 | Gen Svcs Maint Blankt - Data Center | 376,046 | (376,046) | - | - |
| 873 | 96834025 | Data Center UPS Battery Backups | - | - | 407 | 407 |
| 874 | 96834157 | DC Server HW Ref 2027 | 174,609 | - | 174,609 | 174,609 |
| 875 | 96834158 | DC Server HW Ref 2028 | - | - | - | - |
| 876 | 97130526 | TXNM Farmington Office | 1,741,899 | (2,662,745) | 2,550 | 2,550 |
| 877 | 97131007 | Gen Svcs Maint Blanket - Farmington | - | - | - | - |

| | A | B | K | L | M | N |
|---|---|---|---|---|---|---|
| 1 | **Public Service Company of New Mexico** | | | | | |
| 2 | **Schedule B-4** | | | | | |
| 3 | **Construction Work In Progress** | | | | | |
| 4 | **Base Period Ending 6/30/2026** | | | | | |
| 5 | **Test Period Ending 9/30/2028** | | | | | |
| 6 | **This schedule is sponsored by PNM Witness Gutierrez** | | | | | |
| 7 | **Project #** | **Project Description** | **Expenditures Through End of Linkage** | **Clearings Through End of Linkage** | **Linkage Ending Balance Sep-27** | **Test Period Beginning Balance Oct-27** |
| 878 | 97230625 | Masthead TPO Roof | - | - | - | - |
| 879 | 97230725 | Masthead HVAC RTU Replacement | - | 5,695 | 5,695 | 5,695 |
| 880 | 97231007 | Gen Svcs Maint Blanket- Masthead | - | - | - | - |
| 881 | 97231026 | Masthead 2nd Floor Conference Room | - | - | 49,433 | 49,433 |
| 882 | 97728024 | Phy Sec-New Capabilities Prgrm 2024 | - | - | 0 | 0 |
| 883 | 97728025 | Phys Sec New Cap Prog 2025 | - | - | - | - |
| 884 | 97728026 | Phys Sec New Cap Prog 2026 | 230,168 | (230,168) | - | - |
| 885 | 97728027 | Phys Sec New Cap Prog 2027 | 497,026 | - | 497,026 | 497,026 |
| 886 | 97728126 | Genetec ELA 2026 | - | - | 320 | 320 |
| 887 | 97728128 | C Cure ELA 2027 | - | - | - | - |
| 888 | 97728225 | Business Cont SNOW 2025 | - | - | - | - |
| 889 | 97728228 | EVMS Upg or Replace 2028 | - | - | - | - |
| 890 | 97730018 | Building Maintenance Truck Replace | - | - | - | - |
| 891 | 97730024 | 2024 - Gen Svcs Bldg Maint Vehicle | - | - | - | - |
| 892 | 97730125 | 2025 Gen Svcs Bldg Maint Vehicle 2 | - | - | - | - |
| 893 | 97730524 | General Bldg and MRF Upgrades | 5,934,099 | (5,934,099) | - | - |
| 894 | 97730525 | Employee Parking Elevator Rebuilds | 410,110 | (554,323) | 3,233 | 3,233 |
| 895 | 97730526 | HQ Cooling Towers Replacement | 500,047 | (500,047) | - | - |
| 896 | 97730624 | HQ Roof Replacement 2024 | - | - | - | - |
| 897 | 97730625 | HQ Chillers Replacement | - | 33,748 | 33,748 | 33,748 |
| 898 | 97730725 | PNM HQ Executive Gates | - | - | - | - |
| 899 | 97731007 | Gen Svcs Bldg Maint Blanket - Corp | 1,246,751 | (1,055,666) | 205,565 | 205,565 |
| 900 | 97731121 | HQ Building Boiler Upgrades | - | - | - | - |
| 901 | 97732025 | HQ Video Sec Augmentation 2025 | - | - | 80,171 | 80,171 |
| 902 | 97734126 | Security Mitigation Program 2026 | 496 | (17,053) | 41 | 41 |
| 903 | 98628124 | EAM Modernization | 14,985,388 | - | 34,120,385 | 34,120,385 |
| 904 | 98628224 | Maximo Distribution Asset Mgmt 2024 | - | - | 31,348 | 31,348 |
| 905 | 99329907 | Payroll Accrual 2015 | - | - | 77,025 | 77,025 |
| 906 | | | | | | |
| 907 | | Undistributed Balances-184 Clearing Account | - | - | 1,594,662 | 1,594,662 |

| | A | B | K | L | M | N |
|---|---|---|---|---|---|---|
| 1 | **Public Service Company of New Mexico** | | | | | |
| 2 | **Schedule B-4** | | | | | |
| 3 | **Construction Work In Progress** | | | | | |
| 4 | **Base Period Ending 6/30/2026** | | | | | |
| 5 | **Test Period Ending 9/30/2028** | | | | | |
| 6 | **This schedule is sponsored by PNM Witness Gutierrez** | | | | | |
| 7 | **Project #** | **Project Description** | **Expenditures Through End of Linkage** | **Clearings Through End of Linkage** | **Linkage Ending Balance Sep-27** | **Test Period Beginning Balance Oct-27** |
| 908 | | Retirement Work in Progress-108 Account | - | (371,153) | 1,138 | 1,138 |
| 909 | | | | | | |
| 910 | | **Total Corporate** | **88,919,993** | **(69,668,328)** | **53,893,105** | **53,893,105** |
| 911 | | Less CWIP Clearings Deferred to a Future Rate Case | | | | |
| 912 | | ColdFusion Upg 2027 | | | | |
| 913 | | CPR OT Assets Annual Refresh 2027 | | | | |
| 914 | | Phys Sec New Cap Prog 2027 | | | | |
| 915 | | C Cure ELA 2027 | | | | |
| 916 | | General Bldg and MRF Upgrades | | | | |
| 917 | | Gen Svcs Bldg Maint Blanket - Corp | | | | |
| 918 | | EAM Modernization | | | | |
| 919 | | Less Retirement Work in Progress-108 Account | | | | |
| 920 | | **Schedule B-1 Total Corporate Plant in Service Additions** | | | | |

| | A | B | O | P | Q | R |
|---|---|---|---|---|---|---|
| 1 | **Public Service Company of New Mexico** | | | | | |
| 2 | **Schedule B-4** | | | | | |
| 3 | **Construction Work In Progress** | | | | | |
| 4 | **Base Period Ending 6/30/2026** | | | | | |
| 5 | **Test Period Ending 9/30/2028** | | | | | |
| 6 | **This schedule is sponsored by PNM Witness Gutierrez** | | | | | |
| 7 | **Project #** | **Project Description** | **Expenditures Through End of Test Period** | **Clearings Through End of Test Period** | **Test Period Ending Balance Sep-28** | **Reference** |
| 8 | | **Distribution** | | | | |
| 9 | 01099707 | PNM Electric Salvage | - | - | (11,230) | |
| 10 | 09128021 | Customer Experience Program 2021 | - | - | - | |
| 11 | 09128026 | Customer Experience Program 2026 | - | - | 1,131 | |
| 12 | 09128027 | Customer Experience Program 2027 | 32,937 | (102,109) | - | |
| 13 | 09128052 | Co 1-Tibco Integration Suite Upg To | - | - | - | |
| 14 | 09128127 | Liferay & PNM.com Platform Upg 2027 | 325,396 | (1,069,486) | - | |
| 15 | 09128128 | CIS Replacement | 19,433,705 | - | 19,433,705 | |
| 16 | 09128323 | ArcFM Upgr to Utility Network Co 1 | - | - | - | |
| 17 | 09128325 | Community Solar 2025 Cust Consent | - | - | - | |
| 18 | 09128326 | Customer Comm CANSPAM Pref 2026 | - | - | - | |
| 19 | 09128327 | New Customer Comm Platform 2027 | 471,836 | (1,999,248) | - | |
| 20 | 09128328 | Community Solar Cons Bill 2028 | 274,166 | - | 274,166 | |
| 21 | 09128525 | NM Cascade Upgrade 2025 | - | - | - | |
| 22 | 09128528 | PNM.com Redesign 2028 | 133,754 | - | 133,754 | |
| 23 | 09128625 | Community Solar-PRC Additions 2025 | - | - | - | |
| 24 | 09128725 | NICE InContact Program | 161,047 | (713,560) | 300 | |
| 25 | 09128822 | PNM Bill Redesign | - | - | - | |
| 26 | 09132025 | Security Video System 2025-NM | - | - | - | |
| 27 | 10000105 | Residential Line Extensions | - | - | (495) | |
| 28 | 10000107 | Line Extensions - Residential | 7,742,843 | (6,701,409) | 7,960,098 | |
| 29 | 10000205 | Commercial Line Extensions | - | - | 17,486 | |
| 30 | 10000206 | Line Extensions - Commercial | - | - | 7,761 | |
| 31 | 10000207 | Line Extensions - Commercial | 8,032,926 | (6,734,342) | 8,139,595 | |
| 32 | 10000241 | Line Extensions - Residential | - | - | (5,856) | |
| 33 | 10000407 | Line Extensions - Misc. | (2,588) | 1,561 | (834) | |
| 34 | 10000507 | Lighting | 132,711 | (132,820) | 28,111 | |
| 35 | 10000508 | Lighting T&D | 2,814,358 | (2,799,065) | 597,582 | |
| 36 | 10000607 | Distr. Remove & Replace | 2,717,840 | (2,761,635) | 1,658,013 | |
| 37 | 10000608 | Dist. Remove & Replace T&D | 4,154,641 | (3,838,878) | 2,454,273 | |

| | A | B | O | P | Q | R |
|---|---|---|---|---|---|---|
| 1 | **Public Service Company of New Mexico** | | | | | |
| 2 | **Schedule B-4** | | | | | |
| 3 | **Construction Work In Progress** | | | | | |
| 4 | **Base Period Ending 6/30/2026** | | | | | |
| 5 | **Test Period Ending 9/30/2028** | | | | | |
| 6 | **This schedule is sponsored by PNM Witness Gutierrez** | | | | | |
| 7 | **Project #** | **Project Description** | **Expenditures Through End of Test Period** | **Clearings Through End of Test Period** | **Test Period Ending Balance Sep-28** | **Reference** |
| 38 | 10000707 | Distr. System Improvements | 4,326,807 | (4,708,744) | 2,742,626 | |
| 39 | 10000807 | Services | 15,910,897 | (15,889,410) | 2,719,320 | |
| 40 | 10000907 | Transformers | 11,291,851 | (10,975,616) | 4,003,278 | |
| 41 | 10001007 | Meter Equipment | 5,757,117 | (5,741,367) | 953,625 | |
| 42 | 10001207 | Pole Replacements | 198 | (2,169) | 2,039 | |
| 43 | 10001307 | Cable Replacement | - | - | - | |
| 44 | 10001617 | Voltage Cont Cap Upgrade to Two Way | - | - | (0) | |
| 45 | 10001626 | CENT11 & VOLC11 Conductor Upgrade | 177,350 | (693,032) | - | |
| 46 | 10001627 | Central OSMOSE Replacements 27-28 | 3,093,535 | (3,296,945) | 632,735 | |
| 47 | 10001707 | Albuquerque Pure Project | 2,121,120 | (2,111,505) | 355,924 | |
| 48 | 10001717 | 8th Street Circuit Rebuild | - | - | 21,446 | |
| 49 | 10001725 | Project Array | - | - | (0) | |
| 50 | 10001826 | San Pedro Widening | - | - | - | |
| 51 | 10001922 | Overlook Distribution Rebuild | 1,162,260 | (10,124,531) | - | |
| 52 | 10001924 | 614 Cedar Hill Rd NE | - | - | - | |
| 53 | 10001928 | Corrales Bluff 14 Feeder | 4,217,593 | - | 4,217,593 | |
| 54 | 10002010 | Four Hills 13 to Lawrence 14 Feeder | - | - | - | |
| 55 | 10002022 | Valencia Substation Rebuild | - | - | - | |
| 56 | 10002125 | Lightning Mitigation 2025-2026 | - | - | - | |
| 57 | 10002143 | Asset Health Mntrg-Event-24-28 Co1 | - | - | - | |
| 58 | 10002224 | AT&T Vault Relocation | - | - | (0) | |
| 59 | 10002316 | Bird Guard Reliability | 220,028 | (220,107) | 36,651 | |
| 60 | 10002325 | 4th Street and St Mary's Way | - | - | - | |
| 61 | 10002326 | Angel Rd - CRP 23-24 | - | - | - | |
| 62 | 10002327 | Central Feeder Upgrades | 889,526 | (3,476,001) | - | |
| 63 | 10002421 | Sandia 46kV Breaker Replacement | 858,610 | (936,900) | - | |
| 64 | 10002425 | Camino Sin Pasada - CRP2324 | - | - | - | |
| 65 | 10002516 | Pole Grounds Co01 | 193,715 | (190,732) | 33,032 | |
| 66 | 10003020 | ELDO12 Feeder Rebuild | - | - | 0 | |
| 67 | 10003125 | Project Chase | - | - | (40,000) | |

| | A | B | O | P | Q | R |
|---|---|---|---|---|---|---|
| 1 | **Public Service Company of New Mexico** | | | | | |
| 2 | **Schedule B-4** | | | | | |
| 3 | **Construction Work In Progress** | | | | | |
| 4 | **Base Period Ending 6/30/2026** | | | | | |
| 5 | **Test Period Ending 9/30/2028** | | | | | |
| 6 | **This schedule is sponsored by PNM Witness Gutierrez** | | | | | |
| 7 | **Project #** | **Project Description** | **Expenditures Through End of Test Period** | **Clearings Through End of Test Period** | **Test Period Ending Balance Sep-28** | **Reference** |
| 68 | 10003225 | Sandia 46kV Relay Replacement | - | - | - | |
| 69 | 10003521 | LSCH12 Feeder Rebuild | - | - | - | |
| 70 | 10003621 | SOCO12 Feeder Rebuild | - | - | - | |
| 71 | 10003721 | BACA12 Feeder Rebuild | - | - | - | |
| 72 | 10003722 | ELCE11 Feeder Rebuild | - | - | - | |
| 73 | 10005121 | ELCE12 Feeder Rebuild | - | - | - | |
| 74 | 10005228 | Central Osmose Pole Replacements | - | - | - | |
| 75 | 10005251 | Mesa del Sol Infrastructure CO1 | - | - | - | |
| 76 | 10005328 | Palomas Feeders | 8,619,513 | - | 8,619,513 | |
| 77 | 10005424 | Sol Substation Permanent Power | - | - | 0 | |
| 78 | 10005726 | Westpointe Substation-DIST | - | - | - | |
| 79 | 10005821 | ISLE12 Feeder Rebuild | 4,920,544 | (3,099,327) | 3,156,589 | |
| 80 | 10005922 | Prager 12 Volt Imprvmt and Recdtr | - | - | - | |
| 81 | 10030524 | ESC Admin 2nd Floor Remodel | - | - | - | |
| 82 | 10030526 | ESC Line Truck Barn Replacement | - | - | - | |
| 83 | 10030610 | Communication and Equipment Blanket | 70,835 | (71,366) | 17,752 | |
| 84 | 10031922 | Gen Svcs Bldg Maint Blanket-Distr | 707,310 | (708,590) | 175,781 | |
| 85 | 10032025 | Furniture for Y Mora office | - | - | - | |
| 86 | 10034007 | ABQ Metro 2010 Tools & Equipment | 182,237 | (182,237) | 2,586 | |
| 87 | 10034012 | Tech Services Distribution Tools | 115,337 | (115,337) | 255 | |
| 88 | 10505323 | Grid Mod - AMI (Advcd Mtrg Infrstr) | 59,328,451 | (61,507,155) | 525,034 | |
| 89 | 10505423 | Grid Mod - Distribution Automation | 18,961,892 | (18,961,892) | - | |
| 90 | 10505623 | Grid Mod - Dist Planning & Engineer | 2,054,774 | (1,571,297) | 3,154,070 | |
| 91 | 10528023 | Grid Mod - Customer Info and Analyt | 274,290 | (274,290) | 18,060 | |
| 92 | 10528123 | Grid Mod - Cybersecurity | 744,651 | (925,839) | 612,295 | |
| 93 | 10528223 | Grid Mod - ADMS | 7,618,035 | (4,065,325) | 21,440,819 | |
| 94 | 10528323 | Grid Mod - Data Mgmt & Architecture | 1,735,118 | (6,675,390) | 7,522 | |
| 95 | 10534224 | Grid Mod - Telecommunications | 10,465,867 | (10,465,867) | 2,682 | |
| 96 | 14000107 | Line Extensions - Residential | 669,357 | (564,422) | 948,086 | |
| 97 | 14000207 | Line Extensions - Commercial | 26,614 | (25,891) | 9,315 | |

| | A | B | O | P | Q | R |
|---|---|---|---|---|---|---|
| 1 | **Public Service Company of New Mexico** | | | | | |
| 2 | **Schedule B-4** | | | | | |
| 3 | **Construction Work In Progress** | | | | | |
| 4 | **Base Period Ending 6/30/2026** | | | | | |
| 5 | **Test Period Ending 9/30/2028** | | | | | |
| 6 | **This schedule is sponsored by PNM Witness Gutierrez** | | | | | |
| 7 | **Project #** | **Project Description** | **Expenditures Through End of Test Period** | **Clearings Through End of Test Period** | **Test Period Ending Balance Sep-28** | **Reference** |
| 98 | 14000407 | Line Extension - Misc. | - | - | - | |
| 99 | 14000607 | Distr. Remove & Replace | 530,730 | (461,327) | 304,509 | |
| 100 | 14000707 | Distr. System Improvements | 210,346 | (201,526) | 125,679 | |
| 101 | 14001207 | Pole Replacements | - | - | 0 | |
| 102 | 14001307 | Cable Replacement | - | - | (0) | |
| 103 | 14001621 | TIJE12 Feeder Rebuild | 196,687 | - | 2,639,710 | |
| 104 | 15000508 | Lighting T&D | 297,509 | (297,489) | 63,243 | |
| 105 | 15000608 | Distr. Remove & Replace T&D | 2,151,720 | (2,388,927) | 1,371,657 | |
| 106 | 15001816 | Cliff Sub Rebuild | - | - | - | |
| 107 | 15002316 | Bird Guard Reliabilty Co34 | 442,892 | (438,727) | 74,857 | |
| 108 | 15003010 | Substation Equipment Repl. blanket | - | - | 7 | |
| 109 | 15003019 | Lordsburg Substation Improvements | - | - | - | |
| 110 | 15034011 | Southern Tools & Equipment | 122,621 | (121,537) | 21,302 | |
| 111 | 15100107 | Line Extensions - Residential | 266,171 | (81,943) | 422,814 | |
| 112 | 15100207 | Line Extensions - Commercial | 585,343 | (429,709) | 757,770 | |
| 113 | 15100407 | Line Extensions - Misc. | - | - | - | |
| 114 | 15100507 | Lighting | 86,431 | (85,980) | 18,354 | |
| 115 | 15100607 | Distr. Remove & Replace | 70,358 | (65,862) | 41,662 | |
| 116 | 15100707 | Distr. System Improvements | 230,614 | (209,206) | 134,903 | |
| 117 | 15100807 | Services | 466,556 | (465,927) | 79,739 | |
| 118 | 15100907 | Transformers | 590,832 | (584,970) | 101,389 | |
| 119 | 15101007 | Meter Equipment | 27,358 | (27,274) | 4,531 | |
| 120 | 15101207 | Pole Replacement | - | - | (0) | |
| 121 | 15101807 | Alamorgordo Pure Project | 531,208 | (528,851) | 89,124 | |
| 122 | 15102019 | Tularosa 13 Ph Load Bal-Voltage Reg | - | - | - | |
| 123 | 15102026 | Alamogordo Land CO1 | - | - | - | |
| 124 | 15105222 | Alamogordo Substation Co1 | 24,060,658 | (31,773,346) | - | |
| 125 | 15200107 | Line Extensions - Residential | 123,337 | (120,498) | 93,640 | |
| 126 | 15200207 | Line Extensions - Commercial | 176,691 | (64,826) | 347,877 | |
| 127 | 15200407 | Line Extensions - Misc. | 1 | (1) | 0 | |

| | A | B | O | P | Q | R |
|---|---|---|---|---|---|---|
| 1 | **Public Service Company of New Mexico** | | | | | |
| 2 | **Schedule B-4** | | | | | |
| 3 | **Construction Work In Progress** | | | | | |
| 4 | **Base Period Ending 6/30/2026** | | | | | |
| 5 | **Test Period Ending 9/30/2028** | | | | | |
| 6 | **This schedule is sponsored by PNM Witness Gutierrez** | | | | | |
| 7 | **Project #** | **Project Description** | **Expenditures Through End of Test Period** | **Clearings Through End of Test Period** | **Test Period Ending Balance Sep-28** | **Reference** |
| 128 | 15200507 | Lighting | 50,231 | (52,312) | 10,773 | |
| 129 | 15200607 | Distr. Remove & Replace | 268,518 | (233,871) | 154,192 | |
| 130 | 15200707 | Distr. System Improvements | 408,397 | (452,748) | 260,641 | |
| 131 | 15200807 | Services | 227,639 | (227,332) | 38,905 | |
| 132 | 15200907 | Transformers | 260,863 | (254,209) | 92,532 | |
| 133 | 15201007 | Meter Equipment | 183 | (181) | 31 | |
| 134 | 15201707 | Ruidoso Pure Project | 284,277 | (283,012) | 47,696 | |
| 135 | 15202025 | Ruidoso Hospital Upgrade | 1,543,511 | (1,543,511) | - | |
| 136 | 15205224 | South Fork Fire Restoration | - | - | - | |
| 137 | 15500107 | Line Extensions - Residential | 797,795 | (602,368) | 1,047,292 | |
| 138 | 15500207 | Line Extensions - Commercial | 1,498,309 | (1,462,104) | 1,143,335 | |
| 139 | 15500407 | Line Extensions - Misc. | 819 | (9,479) | 400 | |
| 140 | 15500507 | Lighting | 3,965 | (4,363) | 860 | |
| 141 | 15500607 | Distr. Remove & Replace | 452,142 | (386,282) | 257,568 | |
| 142 | 15500707 | Distr. System Improvements | 832,375 | (705,198) | 473,393 | |
| 143 | 15500807 | Services | 639,290 | (638,425) | 109,260 | |
| 144 | 15500907 | Transformers | 455,157 | (450,660) | 78,107 | |
| 145 | 15501007 | Meter Equipment | 43,110 | (42,891) | 7,139 | |
| 146 | 15501707 | Silver City Pure Project | 852,815 | (849,028) | 143,082 | |
| 147 | 15502027 | MD-1 Spare Transformer Replacements | 130,809 | - | 370,876 | |
| 148 | 15502321 | Gila National Forest CO1 | - | - | - | |
| 149 | 15505225 | HFA Pole Rplc SilverCity/Ruidoso | - | - | - | |
| 150 | 15530525 | HVAC Silver City Service Centers | - | - | - | |
| 151 | 15530621 | Silver City Metal Building | - | - | 62,401 | |
| 152 | 15530624 | Standing Seam Metal Roof | - | - | - | |
| 153 | 20000107 | Line Extensions - Residential | 151,245 | (34,910) | 342,673 | |
| 154 | 20000207 | Line Extensions - Commercial | 315,885 | (59,250) | 611,697 | |
| 155 | 20000407 | Line Extension - Misc. | - | - | 4,289 | |
| 156 | 20000507 | Lighting | 9,650 | (9,834) | 2,060 | |
| 157 | 20000607 | Distr. Remove & Replace | 474,683 | (425,647) | 275,937 | |

| | A | B | O | P | Q | R |
|---|---|---|---|---|---|---|
| 1 | **Public Service Company of New Mexico** | | | | | |
| 2 | **Schedule B-4** | | | | | |
| 3 | **Construction Work In Progress** | | | | | |
| 4 | **Base Period Ending 6/30/2026** | | | | | |
| 5 | **Test Period Ending 9/30/2028** | | | | | |
| 6 | **This schedule is sponsored by PNM Witness Gutierrez** | | | | | |
| 7 | **Project #** | **Project Description** | **Expenditures Through End of Test Period** | **Clearings Through End of Test Period** | **Test Period Ending Balance Sep-28** | **Reference** |
| 158 | 20000707 | Distr. System Improvements | 296,328 | (276,561) | 175,416 | |
| 159 | 20000807 | Services | 97,480 | (97,345) | 16,661 | |
| 160 | 20001207 | Pole Replacements | - | (0) | - | |
| 161 | 20001707 | Deming Pure Project | 94,752 | (94,331) | 15,897 | |
| 162 | 20001722 | Deming & Gold Substations | 68,137 | - | 1,064,743 | |
| 163 | 20002024 | Deming Streetlight Upgrades | - | - | - | |
| 164 | 20003026 | Hondale Transformer Replacement | 5,059,915 | (0) | (0) | |
| 165 | 20030526 | Deming Station Roof Repair | - | - | - | |
| 166 | 30000107 | Line Extensions - Residential | 8,996 | (10,249) | 48,300 | |
| 167 | 30000207 | Line Extensions - Commercial | 1,712,697 | (711,586) | 3,386,541 | |
| 168 | 30000607 | Distr. Remove & Replace | 34,807 | (34,473) | 21,130 | |
| 169 | 30000705 | Distr. System Imp. | - | - | 71 | |
| 170 | 30000707 | Distr. System Improvements | 115,016 | (108,498) | 68,398 | |
| 171 | 30000807 | Services | 268,742 | (268,378) | 45,930 | |
| 172 | 30001623 | Las Vegas Streetlight Upgrades | - | - | - | |
| 173 | 30001707 | Las Vegas Pure Project | - | - | - | |
| 174 | 41000107 | Line Extensions - Residential | 2,643,429 | (610,214) | 5,973,719 | |
| 175 | 41000207 | Line Extensions - Commercial | 645,765 | (172,515) | 1,667,416 | |
| 176 | 41000407 | Line Extensions - Misc. | 7,528 | (12,395) | 3,009 | |
| 177 | 41000507 | Lighting | 435 | (426) | 92 | |
| 178 | 41000508 | Lighting T&D | - | - | - | |
| 179 | 41000607 | Distr. Remove & Replace | 227,578 | (308,627) | 161,044 | |
| 180 | 41000608 | Distr. Remove & Replace T&D | 497,677 | (617,816) | 301,444 | |
| 181 | 41000707 | Distr. System Improvements | 637,164 | (657,967) | 394,220 | |
| 182 | 41000807 | Services | 5,140,667 | (5,133,728) | 878,587 | |
| 183 | 41001621 | Distribution Looping in SF-WFF | - | - | 0 | |
| 184 | 41001622 | Caja Del Rio 13 Backbone Upgrade | - | - | - | |
| 185 | 41001625 | Los Suenos Trail SF and Backbone | - | - | - | |
| 186 | 41001707 | Santa Fe Pure Project | 297,088 | (295,740) | 49,852 | |
| 187 | 41001720 | Santa Fe Streetlight Conversion | - | - | - | |

| | A | B | O | P | Q | R |
|---|---|---|---|---|---|---|
| 1 | **Public Service Company of New Mexico** | | | | | |
| 2 | **Schedule B-4** | | | | | |
| 3 | **Construction Work In Progress** | | | | | |
| 4 | **Base Period Ending 6/30/2026** | | | | | |
| 5 | **Test Period Ending 9/30/2028** | | | | | |
| 6 | **This schedule is sponsored by PNM Witness Gutierrez** | | | | | |
| 7 | **Project #** | **Project Description** | **Expenditures Through End of Test Period** | **Clearings Through End of Test Period** | **Test Period Ending Balance Sep-28** | **Reference** |
| 188 | 41001721 | FOMA13 Feeder Rebuild | - | - | - | |
| 189 | 41001820 | SF Switchgear Replacements 20-24 | - | - | - | |
| 190 | 41001825 | Cerillos Rd | - | - | - | |
| 191 | 41001924 | Zafarano Feeder 13 Norm Loading SI | - | - | - | |
| 192 | 41002015 | Caja del Rio 11 to Beckner 12 FT | 857,246 | (3,349,862) | - | |
| 193 | 41002023 | El Dorado 12 Phase 2 Feeder Rebuild | - | - | - | |
| 194 | 41002025 | Estrada Maya - CRP1P | - | - | - | |
| 195 | 41002124 | Beckner 14 Line Extension | 734,426 | (2,869,917) | - | |
| 196 | 41002215 | Mejia 14 to SantaFeEstates Line Ext | - | - | 139,308 | |
| 197 | 41002316 | Bird Guard Reliabilty | 123,942 | (122,596) | 20,993 | |
| 198 | 41002425 | CamelTracks13 to StatePen12 Feeder | 3,573,075 | - | 3,573,075 | |
| 199 | 41002516 | Pole Grounds | 22,266 | (21,916) | 3,799 | |
| 200 | 41002525 | STPE12 HC Solution | - | - | - | |
| 201 | 41002724 | COLI13 Feeder Rebuild Phase 2 | - | - | (0) | |
| 202 | 41002824 | Mejia 115kV Transformer LTC Failure | - | - | - | |
| 203 | 41003027 | Santa Fe 46kV Pole Replacemnt 2028 | 3,106,635 | - | 3,916,062 | |
| 204 | 41005221 | COLI13 Feeder Rebuild | - | - | (0) | |
| 205 | 41005324 | STPE13 Feeder Rebuild | - | - | - | |
| 206 | 41005328 | Santa Fe 46kV Pole Replacement 2029 | 793,350 | - | 793,350 | |
| 207 | 41005525 | Zia Substation Rebuild CO1 | 12,030,652 | (12,323,276) | 1,910,545 | |
| 208 | 41030526 | Santa Fe Cooling Tower Replacement | - | - | - | |
| 209 | 41030820 | Santa Fe Building Improvements | - | - | - | |
| 210 | 41034007 | Tools & Equipment | 178,183 | (178,183) | 600 | |
| 211 | 41037005 | M&J - Comcast connects | - | - | (333) | |
| 212 | 50000107 | Line Extensions - Residential | 740,534 | (521,358) | 927,716 | |
| 213 | 50000207 | Line Extensions - Commercial | 821,348 | (567,774) | 1,022,070 | |
| 214 | 50000407 | Line extensions - Misc. | - | - | 0 | |
| 215 | 50000507 | Lighting | 1,651 | (1,634) | 350 | |
| 216 | 50000607 | Distr. Remove & Replace | 258,853 | (323,284) | 175,543 | |
| 217 | 50000707 | Distr. System Improvements | 529,036 | (486,454) | 311,187 | |

| | A | B | O | P | Q | R |
|---|---|---|---|---|---|---|
| 1 | **Public Service Company of New Mexico** | | | | | |
| 2 | **Schedule B-4** | | | | | |
| 3 | **Construction Work In Progress** | | | | | |
| 4 | **Base Period Ending 6/30/2026** | | | | | |
| 5 | **Test Period Ending 9/30/2028** | | | | | |
| 6 | **This schedule is sponsored by PNM Witness Gutierrez** | | | | | |
| 7 | **Project #** | **Project Description** | **Expenditures Through End of Test Period** | **Clearings Through End of Test Period** | **Test Period Ending Balance Sep-28** | **Reference** |
| 218 | 60000804 | Community Solar Services | - | - | (631,245) | |
| 219 | 60001627 | Distribution Telecom 2027-2028 | 6,132,852 | (4,624,998) | 3,024,346 | |
| 220 | 60001628 | COPR Central OSMOSE 2028-2029 | 865,185 | - | 865,185 | |
| 221 | 60001643 | Sandia 115kV Dist | - | - | - | |
| 222 | 60001644 | Cable Replacement Program 2023-2024 | - | - | - | |
| 223 | 60001645 | Cable Replacement Program 2024-2025 | - | - | 0 | |
| 224 | 60001646 | Cable Replacement Program 2025-2026 | - | - | - | |
| 225 | 60001647 | Cable Replacement Program 2026-2027 | 3,438,107 | (8,208,152) | - | |
| 226 | 60001648 | Cable Replacement Program 2027-2028 | 10,287,348 | (8,573,891) | 4,125,211 | |
| 227 | 60001649 | Cable Replacement Program 2028-2029 | 2,509,766 | - | 2,509,766 | |
| 228 | 60001715 | Storm Funding Project Co01 | - | - | - | |
| 229 | 60001719 | SCADAMATE Switches (OVERHEAD) | - | - | 0 | |
| 230 | 60001721 | Single Phase URD Replacement-WFF | - | - | - | |
| 231 | 60001725 | Sub-Transmission Recloser Install | - | - | - | |
| 232 | 60001726 | Distribution Telecom 2026-2027 | 1,796,762 | (9,577,318) | - | |
| 233 | 60001727 | Northern OSMOSE Pole Rplcmnts 27-28 | 6,254,692 | (6,671,170) | 418,822 | |
| 234 | 60001728 | NORP Northern OSMOSE 2028-2029 | 1,363,504 | - | 1,363,504 | |
| 235 | 60001744 | Dist Struc Replace and Upgrade 2023 | - | - | (0) | |
| 236 | 60001745 | Dist Struc Replace and Upgrade 2024 | - | - | (0) | |
| 237 | 60001746 | Dist Struc Replace and Upgrade 2025 | - | - | - | |
| 238 | 60001747 | Dist Struc Replace and Upgrade 2026 | 30,688 | (290,503) | - | |
| 239 | 60001748 | Dist Struc Replace and Upgrade 2027 | 4,160,376 | (2,584,715) | 1,797,494 | |
| 240 | 60001749 | Dist Struc Replace and Upgrade 2028 | 223,771 | - | 223,771 | |
| 241 | 60001822 | Hawkins Substation | 144,840 | - | 2,263,325 | |
| 242 | 60001826 | State Wide Private Light Conversion | 1,965,011 | (2,823,586) | 503,805 | |
| 243 | 60001828 | SOPR Southern OSMOSE 2028-2029 | 835,794 | - | 835,794 | |
| 244 | 60001844 | Switchgear Replace and Upgrade 2023 | - | - | - | |
| 245 | 60001845 | Switchgear Replace and Upgrade 2024 | - | - | (0) | |
| 246 | 60001846 | Switchgear Replace and Upgrade 2025 | - | - | - | |
| 247 | 60001847 | Switchgear Replace and Upgrade 2026 | 16,389 | (263,377) | - | |

| | A | B | O | P | Q | R |
|---|---|---|---|---|---|---|
| 1 | **Public Service Company of New Mexico** | | | | | |
| 2 | **Schedule B-4** | | | | | |
| 3 | **Construction Work In Progress** | | | | | |
| 4 | **Base Period Ending 6/30/2026** | | | | | |
| 5 | **Test Period Ending 9/30/2028** | | | | | |
| 6 | **This schedule is sponsored by PNM Witness Gutierrez** | | | | | |
| 7 | **Project #** | **Project Description** | **Expenditures Through End of Test Period** | **Clearings Through End of Test Period** | **Test Period Ending Balance Sep-28** | **Reference** |
| 248 | 60001848 | Switchgear Replace and Upgrade 2027 | 2,107,942 | (1,391,177) | 867,395 | |
| 249 | 60001849 | Switchgear Replace and Upgrade 2028 | 158,067 | - | 158,067 | |
| 250 | 60001925 | Rodeo Substation Rebuild CO1 | - | - | - | |
| 251 | 60001927 | Joint Use Make Ready 2027 | 711,539 | (3,347,945) | - | |
| 252 | 60001928 | Distribution Telecomm 2028-2029 | 592,944 | - | 592,944 | |
| 253 | 60001944 | Smart Devi Replace and Upgrade 2023 | - | - | 0 | |
| 254 | 60001945 | Smart Devi Replace and Upgrade 2024 | - | - | (0) | |
| 255 | 60001946 | Smart Devi Replace and Upgrade 2025 | - | - | - | |
| 256 | 60001947 | Smart Devi Replace and Upgrade 2026 | - | - | - | |
| 257 | 60001948 | Smart Devi Replace and Upgrade 2027 | 2,063,350 | (1,586,400) | 716,020 | |
| 258 | 60001949 | Smart Devi Replace and Upgrade 2028 | 250,877 | - | 250,877 | |
| 259 | 60002010 | Misc Substation Improvements Blanke | - | - | - | |
| 260 | 60002019 | Circuit Switcher Repl/Upgrade Distr | - | - | 2,599 | |
| 261 | 60002023 | Los Luans Capacity Phase IV - Distr | - | - | - | |
| 262 | 60002044 | PRC-002 Compliance DFR - Dist | - | - | 25,791 | |
| 263 | 60002046 | Distr Comm Improvement 2026-2030 | 129,125 | (131,075) | 95,583 | |
| 264 | 60002050 | Highway Crossings 2025-2026 | - | - | - | |
| 265 | 60002110 | Misc 46kv Line | 104,733 | (95,735) | 71,972 | |
| 266 | 60002120 | Distribution Relay Replacement | - | - | - | |
| 267 | 60002144 | Open Wire Secondary Upgrade 2023-20 | - | - | 0 | |
| 268 | 60002145 | Open Wire Secondary Upgrade 2024-20 | - | - | (0) | |
| 269 | 60002146 | Open Wire Secondary Upgrade 2025-20 | - | - | - | |
| 270 | 60002147 | Open Wire Secondary Upgrade 2026 | 30,600 | (1,032,969) | - | |
| 271 | 60002148 | Open Wire Secondary Upgrade 2027 | 904,981 | (835,703) | 325,938 | |
| 272 | 60002149 | Open Wire Secondary Upgrade 2028 | 258,877 | - | 258,877 | |
| 273 | 60002206 | Deming SCADA & RCCS Upgrade | - | - | (2,625) | |
| 274 | 60002226 | Facility Conflicts 2026 | - | - | - | |
| 275 | 60002227 | Facility Conflicts 2027 | 325,360 | (1,083,069) | - | |
| 276 | 60002228 | Facility Conflicts 2028 | 3,312,027 | - | 3,312,027 | |
| 277 | 60002244 | Distribution Looping 2023-2024 | - | - | (0) | |

| | A | B | O | P | Q | R |
|---|---|---|---|---|---|---|
| 1 | **Public Service Company of New Mexico** | | | | | |
| 2 | **Schedule B-4** | | | | | |
| 3 | **Construction Work In Progress** | | | | | |
| 4 | **Base Period Ending 6/30/2026** | | | | | |
| 5 | **Test Period Ending 9/30/2028** | | | | | |
| 6 | **This schedule is sponsored by PNM Witness Gutierrez** | | | | | |
| 7 | **Project #** | **Project Description** | **Expenditures Through End of Test Period** | **Clearings Through End of Test Period** | **Test Period Ending Balance Sep-28** | **Reference** |
| 278 | 60002245 | Distribution Looping 2024-2025 | - | - | (0) | |
| 279 | 60002246 | Distribution Looping 2025-2026 | - | - | - | |
| 280 | 60002247 | Distribution Looping 2026-2027 | 274,743 | (847,840) | - | |
| 281 | 60002248 | Distribution Looping 2027-2028 | 4,791,310 | (3,673,920) | 2,294,344 | |
| 282 | 60002249 | Distribution Looping 2028-2029 | 1,187,111 | - | 1,187,111 | |
| 283 | 60002325 | Project Oppidan | - | - | - | |
| 284 | 60002327 | Cochiti 12-feeder Improvements Cap | 2,103,009 | - | 2,103,009 | |
| 285 | 60002328 | Tramway feeders | 727,496 | (2,842,839) | - | |
| 286 | 60002424 | St Cecilia 11 Re-conductor | - | - | - | |
| 287 | 60002442 | Not in Service Conductors-WFF | - | - | - | |
| 288 | 60002519 | Distribution Comm Improvement 2020 | - | - | 22,126 | |
| 289 | 60002521 | Prosperity Substation | - | - | - | |
| 290 | 60002526 | Project Ranger | - | - | - | |
| 291 | 60002541 | Wayne Substation | - | - | 2,625 | |
| 292 | 60002619 | Sagebrush Station-Distribution | - | - | (0) | |
| 293 | 60002622 | ELCE12 Feeder Laterals Rebuild | 1,312,546 | - | 5,315,608 | |
| 294 | 60002626 | Central 15 Feeder | - | - | - | |
| 295 | 60002714 | Pachmann Substation-Distribution | - | - | - | |
| 296 | 60002720 | Distr System Rpl Wire to Insulated | - | - | (0) | |
| 297 | 60002742 | Switchgear Rpl Vermin Damage-WFF | - | - | (0) | |
| 298 | 60002743 | Recloser Replacements-WFF | - | - | (0) | |
| 299 | 60002822 | Tramway Substation | 2,219,149 | (7,969,697) | - | |
| 300 | 60002824 | Dist Substation Ground Replacements | - | - | (0) | |
| 301 | 60002920 | Outage Contingency Plan Impr-WFF | - | - | - | |
| 302 | 60003023 | CORNELL 14 - Feeder Backbone Rebuil | 4,843,429 | - | 7,711,563 | |
| 303 | 60003027 | Subtransm Relay Replacement 2027-28 | 5,679,457 | - | 10,484,113 | |
| 304 | 60003113 | Morris 12 Feeder Rebuild | 3,010,575 | (2,278,608) | 1,638,397 | |
| 305 | 60003118 | Distr Cable Testing and Replace 201 | - | - | - | |
| 306 | 60003119 | Distr Cable Testing - Replace 2019 | - | - | (340) | |
| 307 | 60003126 | Project Lola | - | - | - | |

| | A | B | O | P | Q | R |
|---|---|---|---|---|---|---|
| 1 | **Public Service Company of New Mexico** | | | | | |
| 2 | **Schedule B-4** | | | | | |
| 3 | **Construction Work In Progress** | | | | | |
| 4 | **Base Period Ending 6/30/2026** | | | | | |
| 5 | **Test Period Ending 9/30/2028** | | | | | |
| 6 | **This schedule is sponsored by PNM Witness Gutierrez** | | | | | |
| 7 | **Project #** | **Project Description** | **Expenditures Through End of Test Period** | **Clearings Through End of Test Period** | **Test Period Ending Balance Sep-28** | **Reference** |
| 308 | 60003421 | Underground Cable-WFF | - | - | 0 | |
| 309 | 60003520 | Relay Distribution IA | 46,604 | (45,720) | 18,061 | |
| 310 | 60003620 | Van Buren Substation Metering | - | - | - | |
| 311 | 60003621 | Distr Comm Improvement 2021-2025 | - | - | - | |
| 312 | 60003625 | Distribution HFA Feeder Relay Rplc | 77,204 | (77,204) | - | |
| 313 | 60003825 | Valencia Distribution Feeders | 1,690,310 | (7,286,200) | - | |
| 314 | 60003924 | Manzanita Dist Feeders and Equip | - | - | - | |
| 315 | 60003925 | Sandia Battery Storage 60MW-CO1 | - | - | 0 | |
| 316 | 60004025 | BLM_US Forest Service ROW - Dist | 462,247 | - | 767,084 | |
| 317 | 60004225 | Distribution Pole Replcmt Prog 2025 | 4,220,531 | - | 4,220,531 | |
| 318 | 60004321 | Claremont Substation | 8,584,970 | - | 8,623,082 | |
| 319 | 60004324 | Claremont Substation-Land | - | - | - | |
| 320 | 60004325 | Zia 46kV Relay Replacement | 1,237,275 | - | 1,311,250 | |
| 321 | 60004421 | Girard Substation | 55,750 | - | 871,178 | |
| 322 | 60004425 | WF Enhanced Sit Awareness Co1 | - | - | 0 | |
| 323 | 60004521 | Montano Substation | 17,997 | - | 281,223 | |
| 324 | 60005219 | Manzanita | - | - | 110 | |
| 325 | 60005220 | Palomas Station-Distribution | 3,997,593 | - | 3,997,593 | |
| 326 | 60005240 | Progress 2 Expansion CO1 | - | - | - | |
| 327 | 60005321 | Dist Relay Replacement 2021-2024 | - | - | 74,683 | |
| 328 | 60005322 | Morris Substation | 146,797 | - | 2,293,916 | |
| 329 | 60005324 | Distribution Relay Upgrades | 2,590,532 | (6,121,231) | 0 | |
| 330 | 60005327 | Northern Osmose Pole Replacements | - | - | 0 | |
| 331 | 60005328 | Snow Vista Unit 2 | 8,503,243 | - | 8,503,243 | |
| 332 | 60005425 | Wildfire Mitigation 2025-2026 | - | - | 0 | |
| 333 | 60005426 | Wildfire Mitigation 2026-2027 | 93 | (93) | - | |
| 334 | 60005427 | Wildfire Mitigation 2027-2028 | 7,219,516 | (5,896,082) | 4,037,088 | |
| 335 | 60005428 | Wildfire Mitigation 2028-2029 | 2,711,523 | - | 2,711,523 | |
| 336 | 60005522 | 33.6MVA Pwr Xfmr Critical Sp 2024 | - | - | - | |
| 337 | 60005524 | Wildfire Pole Inspect & Treat - CO1 | - | - | - | |

| | A | B | O | P | Q | R |
|---|---|---|---|---|---|---|
| 1 | **Public Service Company of New Mexico** | | | | | |
| 2 | **Schedule B-4** | | | | | |
| 3 | **Construction Work In Progress** | | | | | |
| 4 | **Base Period Ending 6/30/2026** | | | | | |
| 5 | **Test Period Ending 9/30/2028** | | | | | |
| 6 | **This schedule is sponsored by PNM Witness Gutierrez** | | | | | |
| 7 | **Project #** | **Project Description** | **Expenditures Through End of Test Period** | **Clearings Through End of Test Period** | **Test Period Ending Balance Sep-28** | **Reference** |
| 338 | 60005527 | Joint Use 2028 | 8,185,382 | (4,610,032) | 3,575,350 | |
| 339 | 60005528 | Subtransmission Relay Repl 2029-30 | 1,879,346 | - | 1,879,346 | |
| 340 | 60005622 | 33.6MVA Pwr Xfmr Critical Sp 2025 | - | - | 14,288,014 | |
| 341 | 60005624 | NM Ops Long Lead Equip Blanket CO1 | 773,407 | - | 12,085,582 | |
| 342 | 60005722 | Sky Ranch 1 - Distribution | - | - | - | |
| 343 | 60005726 | Joint Use Make Ready 2026 | - | - | - | |
| 344 | 60005822 | Menaul Substation | 86,611 | - | 1,353,427 | |
| 345 | 60005910 | Substation Equipment Replacements B | 1,256,974 | (1,125,195) | 1,046,884 | |
| 346 | 60029905 | Accounting True ups | - | - | 1,045,868 | |
| 347 | 60030022 | Spec Equip and Vehicles Co1 | 437,709 | (435,109) | 327,155 | |
| 348 | 60030524 | ESC WPM Critical Backup Facility | - | - | - | |
| 349 | 60030526 | Las Vegas Office ADA Ramp | - | - | - | |
| 350 | 60034022 | Fleet Tool Blanket | 37,595 | (38,400) | 36,586 | |
| 351 | 89900107 | Line Extensions - Residential | 1,060,648 | (665,715) | 1,233,503 | |
| 352 | 89900141 | LINE EXT RESIDENTIAL 2004 | - | - | 34 | |
| 353 | 89900207 | Line Extensions - Commercial | 359,476 | (215,670) | 404,156 | |
| 354 | 89900407 | Line extensions - Misc. | (1,605) | 1,611 | 18,736 | |
| 355 | 89900507 | Lighting | - | - | 0 | |
| 356 | 89900607 | Distr. Remove & Replace | 76,355 | (96,692) | 37,424 | |
| 357 | 89900707 | Distr. System Improvements | 155,128 | (209,136) | 109,210 | |
| 358 | 90000207 | Line Extensions - Commercial | 30,099 | (6,637) | 66,019 | |
| 359 | 90000607 | Distr. Remove & Replace | 27,447 | (23,440) | 15,633 | |
| 360 | 90000707 | Distr. System Improvements | 37 | (820) | 234 | |
| 361 | 90000807 | Services | (1,284) | 1,281 | (220) | |
| 362 | ALA15205 | LA LUZ CROSSROADS SUB | - | - | (3,000) | |
| 363 | NME40305 | HOLLYWOOD LINE-DIST SUB WORK | - | - | 24,147 | |
| 364 | | **Total Distribution** | **428,685,977** | **(369,270,092)** | **264,339,287** | |
| 365 | | | | | | |
| 366 | | **Transmission** | | | | |
| 367 | 09228224 | Transmission FERC Order 2023 Heatma | - | - | - | |

| | A | B | O | P | Q | R |
|---|---|---|---|---|---|---|
| 1 | **Public Service Company of New Mexico** | | | | | |
| 2 | **Schedule B-4** | | | | | |
| 3 | **Construction Work In Progress** | | | | | |
| 4 | **Base Period Ending 6/30/2026** | | | | | |
| 5 | **Test Period Ending 9/30/2028** | | | | | |
| 6 | **This schedule is sponsored by PNM Witness Gutierrez** | | | | | |
| 7 | **Project #** | **Project Description** | **Expenditures Through End of Test Period** | **Clearings Through End of Test Period** | **Test Period Ending Balance Sep-28** | **Reference** |
| 368 | 09228225 | Co2 OT Int Sec Network Monitoring | - | - | 6 | |
| 369 | 22007021 | Gila National Forest Co02 | - | - | - | |
| 370 | 22007110 | Misc. 115kv Trans Imp Blanket | 119,407 | (118,455) | 49,845 | |
| 371 | 22007722 | Alamogordo Substation Co2 | 17,700,814 | (31,329,224) | - | |
| 372 | 64807018 | UVLS Relay-VT Upg Gavilan-Hollywood | - | - | - | |
| 373 | 64807025 | Leyendecker Substation | - | - | - | |
| 374 | 64807040 | Norton Capacitor | - | - | - | |
| 375 | 64807126 | State Pen Substation | 7,903,585 | - | 7,903,585 | |
| 376 | 64807128 | EOL Network Replacements | 423,386 | - | 423,386 | |
| 377 | 64807140 | Tribal Fiber-WFF | - | - | 116,749 | |
| 378 | 64807222 | WW Reactor Breaker Replacement | - | - | - | |
| 379 | 64807225 | Failed Sta Equip Replcmt Progm 2025 | - | - | - | |
| 380 | 64807226 | Rodeo Substation Rebuild CO2 | - | - | - | |
| 381 | 64807228 | Telecom Flashwave Replace Block 4 | 161,382 | - | 161,382 | |
| 382 | 64807319 | North Sub Water Diversion Rtng Wall | - | - | - | |
| 383 | 64807321 | System Equipment Upgrade-WFF | - | - | - | |
| 384 | 64807322 | WFF-Reconfig Tap Sub Unit 2 | - | - | 1,574,591 | |
| 385 | 64807325 | Luna GT 2 GSU Transformer CO2 | - | - | - | |
| 386 | 64807327 | Algodones Control Enclosure | 2,351,797 | - | 4,954,654 | |
| 387 | 64807328 | OCB Breaker Replacement 2029 | 1,136,635 | - | 1,136,635 | |
| 388 | 64807420 | Guadalupe 44 MVAR Reactor Regasket | - | - | - | |
| 389 | 64807425 | Transmission Pole Replcmt Prog 2025 | - | - | - | |
| 390 | 64807525 | WF Enhanced Sit Awareness Co2 | - | - | - | |
| 391 | 64807527 | Claremont Building Demolition | 481,638 | (1,882,099) | - | |
| 392 | 64807528 | West Mesa AJ Reactor Replacement | 2,886,408 | - | 3,723,517 | |
| 393 | 64807542 | SEL Relay Project Block 1 | - | - | - | |
| 394 | 64807625 | FERC-881 AAR | 31,630 | (956,847) | - | |
| 395 | 64807626 | YTH Failed Breaker Replacement | - | - | - | |
| 396 | 64807642 | Guadalupe SVC Backup Generator | - | - | - | |
| 397 | 64807919 | Acoma 115kV Tap to BW Line | - | - | - | |

| | A | B | O | P | Q | R |
|---|---|---|---|---|---|---|
| 1 | **Public Service Company of New Mexico** | | | | | |
| 2 | **Schedule B-4** | | | | | |
| 3 | **Construction Work In Progress** | | | | | |
| 4 | **Base Period Ending 6/30/2026** | | | | | |
| 5 | **Test Period Ending 9/30/2028** | | | | | |
| 6 | **This schedule is sponsored by PNM Witness Gutierrez** | | | | | |
| 7 | **Project #** | **Project Description** | **Expenditures Through End of Test Period** | **Clearings Through End of Test Period** | **Test Period Ending Balance Sep-28** | **Reference** |
| 398 | 64807920 | Prosperity Transmission Substation | - | - | (0) | |
| 399 | 64808026 | Guadalupe Reactor Replacement | - | - | - | |
| 400 | 64808126 | Ojo Reactor Replacement | - | - | - | |
| 401 | 64808422 | Embudo Substation | - | - | - | |
| 402 | 64808522 | Tramway Substation | - | - | - | |
| 403 | 64808723 | Aspen Substation | 69,169 | - | 1,080,869 | |
| 404 | 64808925 | BLM_US Forest Service ROW - Trans | 749,778 | - | 1,178,685 | |
| 405 | 64809026 | Progress 2 Expansion CO2 | - | - | - | |
| 406 | 64809027 | Hidden Mountain Expansion Mid-State | 9,405,896 | - | 9,405,896 | |
| 407 | 64809028 | Transmission HFA Relay Replace 2029 | 2,935,476 | - | 2,935,476 | |
| 408 | 64809120 | SEL Relay Project 2020 | - | - | 0 | |
| 409 | 64809126 | Midstate Reactor Procurement | 511,536 | - | 7,993,480 | |
| 410 | 64809222 | Trans Relay Replacement 2022 | - | - | 0 | |
| 411 | 64809324 | Zia and MD1 Control House Replcmt | 3,724,331 | - | 6,431,451 | |
| 412 | 64809427 | Plus Power Oso Negro | 9,637,881 | - | 16,877,068 | |
| 413 | 64809527 | Transmission HFA Relay Replace 2027 | 11,186,088 | (12,491,662) | 8,730,761 | |
| 414 | 64830023 | Spec Equip and Vehicles Co2 | 334,723 | (332,712) | 251,622 | |
| 415 | 65006010 | San Juan Vail | - | - | 0 | |
| 416 | 65006110 | ANPP Transmission blanket | 1,488,627 | (2,781,228) | 776,897 | |
| 417 | 65006210 | SW NM Transmission Blanket | 1,518,290 | (2,809,973) | 799,204 | |
| 418 | 65007010 | Misc. Station Improvements | - | - | - | |
| 419 | 65007047 | WM 115kV Trans | - | - | - | |
| 420 | 65007048 | Storage for Critical Spares - Power | - | - | - | |
| 421 | 65007050 | RTU Program | 1,991,601 | - | 3,082,249 | |
| 422 | 65007110 | Misc. Transmission Blanket | 5,492,276 | (5,286,184) | 1,620,382 | |
| 423 | 65007119 | Asset Health Monitoring_Event Rptg | - | - | 215,548 | |
| 424 | 65007123 | AW 115kV Structure Replace Phase 1 | 6,054,862 | (6,054,862) | - | |
| 425 | 65007124 | Prager to Richmond Line Upgrade | 867,801 | (8,032,181) | - | |
| 426 | 65007140 | Long Lead Material-WFF | - | - | (0) | |
| 427 | 65007143 | Asset Health Mntrg-Event Rptg 24-28 | 2,275,149 | - | 4,521,508 | |

| | A | B | O | P | Q | R |
|---|---|---|---|---|---|---|
| 1 | **Public Service Company of New Mexico** | | | | | |
| 2 | **Schedule B-4** | | | | | |
| 3 | **Construction Work In Progress** | | | | | |
| 4 | **Base Period Ending 6/30/2026** | | | | | |
| 5 | **Test Period Ending 9/30/2028** | | | | | |
| 6 | **This schedule is sponsored by PNM Witness Gutierrez** | | | | | |
| 7 | **Project #** | **Project Description** | **Expenditures Through End of Test Period** | **Clearings Through End of Test Period** | **Test Period Ending Balance Sep-28** | **Reference** |
| 428 | 65007150 | Star Light Interconection Expansion | - | - | - | |
| 429 | 65007219 | New Sandia 115 kV Control House | - | - | - | |
| 430 | 65007223 | TAG Solar and BESS Project | - | - | (0) | |
| 431 | 65007224 | EPE EP Line Relay Upgrade | - | - | (0) | |
| 432 | 65007226 | Pajarito 345kV Exp-Corazon Intrcnct | 6,377,603 | - | 13,665,209 | |
| 433 | 65007312 | Reeves-Embudo 115kV Rebuild | 78,169 | - | 1,221,508 | |
| 434 | 65007324 | NTUA Coalmine Metering | - | - | - | |
| 435 | 65007326 | Sunbelt San Juan 345kV Interconnect | - | - | - | |
| 436 | 65007327 | UNM Transmission Line Relocation | 3,499,466 | - | (895,400) | |
| 437 | 65007424 | Sandia Battery Storage 60MW-CO2 | - | - | (0) | |
| 438 | 65007626 | TPL1 Breaker Replacements | 10,493,132 | (14,883,287) | 302,165 | |
| 439 | 65007627 | TPL1 P5 Relay Upgrades | 71,078 | (917,354) | - | |
| 440 | 65007644 | Transm Comm Improvement 2026-2030 | 1,014,789 | (1,029,937) | 751,224 | |
| 441 | 65007710 | Switch Stations Replacements IA | 1,669,065 | (1,603,534) | 492,955 | |
| 442 | 65007713 | Trans Sub Ground Repairs Blanket | 280,516 | (284,698) | 207,661 | |
| 443 | 65007718 | System Wide Relay Upgrades | - | - | (0) | |
| 444 | 65007726 | Ojo ICLSS RAS Relay Additions | - | - | - | |
| 445 | 65007825 | Route 66 Interconnection Expansion | - | - | (0) | |
| 446 | 65007826 | Windy Lane Interconnection | - | - | 0 | |
| 447 | 65007914 | Relay IA | 55,709 | (56,099) | 23,517 | |
| 448 | 65007925 | Quail Ranch Interconnection Exp | - | - | (0) | |
| 449 | 65007926 | Fox Tail Interconnection | - | - | (0) | |
| 450 | 65008018 | Transmission Communication Improvem | - | - | - | |
| 451 | 65008021 | Transm Comm Improvement 2021-2025 | - | - | (0) | |
| 452 | 65008026 | Four Mile Mesa Interconnection | - | - | (0) | |
| 453 | 65008117 | NERC Physical Security-WFF | - | - | - | |
| 454 | 65008125 | Sky Ranch Interconnection Expansion | - | - | (0) | |
| 455 | 65008143 | NERC Physical Security 24-28 | - | - | - | |
| 456 | 65008217 | Line Switch Replacement | - | - | - | |
| 457 | 65008220 | Sagebrush Station-Transmission | - | - | - | |

| | A | B | O | P | Q | R |
|---|---|---|---|---|---|---|
| 1 | **Public Service Company of New Mexico** | | | | | |
| 2 | **Schedule B-4** | | | | | |
| 3 | **Construction Work In Progress** | | | | | |
| 4 | **Base Period Ending 6/30/2026** | | | | | |
| 5 | **Test Period Ending 9/30/2028** | | | | | |
| 6 | **This schedule is sponsored by PNM Witness Gutierrez** | | | | | |
| 7 | **Project #** | **Project Description** | **Expenditures Through End of Test Period** | **Clearings Through End of Test Period** | **Test Period Ending Balance Sep-28** | **Reference** |
| 458 | 65008225 | Fujitsu Flashware Replacements | 528,518 | - | 1,125,378 | |
| 459 | 65008315 | Storm Funding Project Co02 | - | - | - | |
| 460 | 65008325 | LANL 115kV Interconnection | - | - | - | |
| 461 | 65008392 | West Mesa Control House Replacement | - | - | (0) | |
| 462 | 65008425 | Storage for Long Lead Equipment | - | - | (9,474) | |
| 463 | 65008826 | Alamogordo Land CO2 | - | - | - | |
| 464 | 65008912 | St Cecilia Station Co2 | - | - | (0) | |
| 465 | 65008922 | Pajarito-Rio Puerco 345kV ROW | - | - | 654,227 | |
| 466 | 65008953 | Guadalupe 72 MVAR Regasket | - | - | - | |
| 467 | 65008994 | San Juan Solar | - | - | - | |
| 468 | 65008997 | PRC-002 Compliance DFR Project | - | - | - | |
| 469 | 65009007 | NM Ops Long Lead Equipment Blanket | 1,407,040 | - | 21,986,993 | |
| 470 | 65009014 | Second 345/115 kV Transformer YTH | - | - | - | |
| 471 | 65009016 | Facebook Phase I-Trans Sys Upgrade | - | - | 0 | |
| 472 | 65009022 | Belen Phase Shifting Transformer | - | - | - | |
| 473 | 65009024 | Belen PST Substation Install | - | - | - | |
| 474 | 65009025 | Pajarito to Rio Puerco 345kV Line | 62,889,602 | - | 92,636,799 | |
| 475 | 65009027 | Pajarito to Prosperity 345kV Line | 40,844,774 | - | 57,895,096 | |
| 476 | 65009030 | EP Line Termination | - | - | - | |
| 477 | 65009040 | Rio Puerco-Sandia Longlead Breakers | 5,182,455 | - | 11,408,477 | |
| 478 | 65009042 | Desert Station - Transmission | - | - | - | |
| 479 | 65009050 | Zia Substation Rebuild CO2 | 8,569,347 | (8,403,064) | 4,203,680 | |
| 480 | 65009116 | Huning Ranch Expansion | - | - | 72 | |
| 481 | 65009124 | Sol Substation Permanent Power Tran | - | - | 4,638 | |
| 482 | 65009126 | Central 115-12kV Substation Rebuild | - | - | - | |
| 483 | 65009214 | Sandia 345/115kv Spare Transformer | - | - | - | |
| 484 | 65009223 | Norton-Hernandez 115kV Rebuild | 60,483 | - | 945,139 | |
| 485 | 65009319 | Palomas Station-Transmission | 5,769,371 | - | 5,769,371 | |
| 486 | 65009321 | Project Sky Ranch 1 | - | - | - | |
| 487 | 65009422 | Los Lunas Capacity Expansion | - | - | - | |

| | A | B | O | P | Q | R |
|---|---|---|---|---|---|---|
| 1 | **Public Service Company of New Mexico** | | | | | |
| 2 | **Schedule B-4** | | | | | |
| 3 | **Construction Work In Progress** | | | | | |
| 4 | **Base Period Ending 6/30/2026** | | | | | |
| 5 | **Test Period Ending 9/30/2028** | | | | | |
| 6 | **This schedule is sponsored by PNM Witness Gutierrez** | | | | | |
| 7 | **Project #** | **Project Description** | **Expenditures Through End of Test Period** | **Clearings Through End of Test Period** | **Test Period Ending Balance Sep-28** | **Reference** |
| 488 | 65009424 | Valencia Substation Rebuild - Trans | - | - | - | |
| 489 | 65009440 | Sun Lasso Interconnection | - | - | - | |
| 490 | 65009522 | Atrisco Interconnection | - | - | - | |
| 491 | 65009527 | Morrow Phase II | 25,582,619 | - | 42,310,844 | |
| 492 | 65009540 | Bernalillo Interconnection | 5,842,956 | (5,843,884) | - | |
| 493 | 65009640 | Mesa del Sol Infrastructure CO2 | 78,878,184 | (105,988,128) | - | |
| 494 | 65009722 | Belen-Sun Ranch 115kV Rebuild | 95,095 | - | 1,485,994 | |
| 495 | 65009725 | Broken equipment replacement fund | 1,366,096 | (782,869) | 831,416 | |
| 496 | 65009727 | Pinyon Park | 43,338,067 | - | 57,369,620 | |
| 497 | 65009740 | Westpointe Substation-TRN | - | - | - | |
| 498 | 65009823 | Person-Kirtland Switching 115kV Reb | 110,055 | - | 1,719,765 | |
| 499 | 65009925 | Transmission Line Pole Replcmt 2025 | 2,888,109 | (2,927,472) | 2,138,955 | |
| 500 | 65009926 | Los Lunas Capacity Expansion Phse 5 | 38,176,354 | (108,935,182) | - | |
| 501 | 65009950 | Los Lunas Capacity Expansion Phase4 | - | - | (0) | |
| 502 | 65028026 | NM Wholesale MV90 Upgrade 2026 | - | - | 249 | |
| 503 | 65028040 | FERC 881 | - | - | 4,535 | |
| 504 | 65028125 | Comm Improvements Software | - | - | - | |
| 505 | 65028126 | NERC PRC-027 CORE Software | 419,585 | (2,210,190) | - | |
| 506 | 65029905 | Accounting True ups | - | - | - | |
| 507 | 65030610 | Communications Equipment-blanket | 280,078 | (275,788) | 70,262 | |
| 508 | 65031922 | Gen Svcs Bldg Maint Blanket-Trans | 84,334 | (85,643) | 62,418 | |
| 509 | 65034010 | Co2 Tools & Equipment | 116,154 | (116,154) | 417 | |
| 510 | 65034012 | TECH SERVICE TRANSMISSION TOOLS | 237,249 | (237,249) | 169 | |
| 511 | 67607026 | San Juan Control House Improvements | - | - | - | |
| 512 | 67607625 | San Juan Stn Switchgear Replacement | - | - | 0 | |
| 513 | 67607626 | San Juan 345kV Live Tank Breakers | 335,764 | (1,312,067) | - | |
| 514 | 67607640 | SJ Lightning and Backup Power 26-01 | 93,493 | (410,675) | - | |
| 515 | 67607641 | SJ Switchyard Capital 26-02 | - | - | - | |
| 516 | | **Total Transmission** | **438,075,475** | **(328,378,701)** | **404,329,325** | |
| 517 | | | | | | |

| | A | B | O | P | Q | R |
|---|---|---|---|---|---|---|
| 1 | **Public Service Company of New Mexico** | | | | | |
| 2 | **Schedule B-4** | | | | | |
| 3 | **Construction Work In Progress** | | | | | |
| 4 | **Base Period Ending 6/30/2026** | | | | | |
| 5 | **Test Period Ending 9/30/2028** | | | | | |
| 6 | **This schedule is sponsored by PNM Witness Gutierrez** | | | | | |
| 7 | **Project #** | **Project Description** | **Expenditures Through End of Test Period** | **Clearings Through End of Test Period** | **Test Period Ending Balance Sep-28** | **Reference** |
| 518 | | **Afton** | | | | |
| 519 | 70716025 | Afton Heat Exchanger Coil Repl | - | - | - | |
| 520 | 70716030 | Afton Compressor Upgrade Pkg 3 2028 | 51,660 | - | 807,262 | |
| 521 | 70716043 | Afton Steam Turbine Major Inspectn | - | - | - | |
| 522 | 70716325 | Afton High Energy Pipe Repl HRH | - | - | - | |
| 523 | 70716425 | Afton HRSG Lower Penetration Seal | - | - | - | |
| 524 | 70716440 | Afton ST Generator Exciter Rewind | - | - | - | |
| 525 | 70716724 | Afton CT Generator/Rotor Fld Rplcmt | - | - | - | |
| 526 | 70716826 | SCR Catalyst Replacement | - | - | - | |
| 527 | 70716926 | Afton LCI Exciter Transformer | - | - | - | |
| 528 | 70717126 | Afton 52 Line Breaker Relays Repl | - | - | - | |
| 529 | 70717424 | Afton Non Outage Plant Capital 2024 | - | - | 124,691 | |
| 530 | 70717425 | Afton Non Outage Plant Capital 2025 | - | - | - | |
| 531 | 70717426 | Afton Non Outage Plant Capital 2026 | - | - | - | |
| 532 | 70717427 | Afton Non Outage Plant Capital 2027 | - | - | - | |
| 533 | 70717428 | Afton Non Outage Plant Capital 2028 | 428,266 | (99,030) | 329,236 | |
| 534 | 70717525 | Afton Outage Plant Capital 2025 | - | - | 4,145 | |
| 535 | 70717526 | Afton Outage Plant Capital 2026 | - | - | - | |
| 536 | 70717527 | Afton Outage Plant Capital 2027 | - | - | - | |
| 537 | 70717528 | Afton Outage Plant Capital 2028 | 5,634,463 | (5,634,463) | - | |
| 538 | 70717925 | Afton ST Generator Rewedge | - | - | 104 | |
| 539 | 70718026 | AFT Gas Turbine Major | 76,624 | (2,137,605) | - | |
| 540 | 70728025 | Afton Oper Tech Projects 2025 | - | - | - | |
| 541 | | **Total Afton** | **6,191,014** | **(7,871,098)** | **1,265,438** | |
| 542 | | | | | | |
| 543 | | **Lordsburg** | | | | |
| 544 | 70316025 | Lordsburg Capital Improvements 2025 | - | - | - | |
| 545 | 70316028 | Lordsburg Non Outage Plant Cap 2028 | 118,972 | (118,972) | - | |
| 546 | 70316124 | Lordsburg RO &Evaporation Pond | - | - | 0 | |
| 547 | 70316126 | Lordsburg U1 Depot Visit | - | - | - | |

| | A | B | O | P | Q | R |
|---|---|---|---|---|---|---|
| 1 | **Public Service Company of New Mexico** | | | | | |
| 2 | **Schedule B-4** | | | | | |
| 3 | **Construction Work In Progress** | | | | | |
| 4 | **Base Period Ending 6/30/2026** | | | | | |
| 5 | **Test Period Ending 9/30/2028** | | | | | |
| 6 | **This schedule is sponsored by PNM Witness Gutierrez** | | | | | |
| 7 | **Project #** | **Project Description** | **Expenditures Through End of Test Period** | **Clearings Through End of Test Period** | **Test Period Ending Balance Sep-28** | **Reference** |
| 548 | 70316325 | Lordsburg U2 Depot Visit | - | - | - | |
| 549 | 70316527 | Lordsburg Cap Planned Outage 2027 | - | - | - | |
| 550 | | **Total Lordsburg** | **118,972** | **(118,972)** | **0** | |
| 551 | | | | | | |
| 552 | | **Reeves** | | | | |
| 553 | 71316027 | Reeves U2 Step Up Transformer 2029 | 125,960 | - | 1,968,302 | |
| 554 | 71316028 | Reeves U1 Step Up Transformer 2030 | 1,843,586 | - | 1,843,586 | |
| 555 | 71316124 | Reeves U3 Boiler Waterwall Repl | - | - | - | |
| 556 | 71316127 | Reeves U3 Boiler Economizers 2028 | 3,629,488 | (3,629,488) | - | |
| 557 | 71316424 | Reeves Non Outage Plant Cap 2024 | - | - | 45,209 | |
| 558 | 71316425 | Reeves Non Outage Plant Cap 2025 | - | - | - | |
| 559 | 71316426 | Reeves Non Outage Plant Cap 2026 | - | - | - | |
| 560 | 71316427 | Reeves Non Outage Plant Cap 2027 | - | - | - | |
| 561 | 71316428 | Reeves Non Outage Plant Cap 2028 | 1,160,545 | (1,160,545) | - | |
| 562 | 71316525 | Reeves Outage Plant Capital 2025 | - | - | - | |
| 563 | 71316526 | Reeves Outage Plant Capital 2026 | - | - | - | |
| 564 | 71316527 | Reeves Outage Plant Capital 2027 | - | - | - | |
| 565 | 71316528 | Reeves Outage Plant Capital 2028 | 4,032,306 | (3,326,544) | 705,761 | |
| 566 | 71316624 | Reeves U3 Turbine Generator Outage | - | - | - | |
| 567 | 71316626 | Reeves U2 Auxiliary Transformer | - | - | - | |
| 568 | 71316813 | Unit 1 Superheater replacement | - | - | (1,077) | |
| 569 | 71316925 | Reeves U3 Generator Exciter Contrlr | - | - | (0) | |
| 570 | | **Total Reeves** | **10,791,885** | **(8,116,577)** | **4,561,781** | |
| 571 | | | | | | |
| 572 | | **Four Corners** | | | | |
| 573 | 71519017 | Four Corners Facility Improvements | 11,017,091 | (9,470,647) | 9,947,679 | |
| 574 | 71519117 | Four Corners Facility - Switchyard | 197,543 | (404,270) | 146,001 | |
| 575 | 71519208 | Four Corners Facility Improvements | - | - | (744) | |
| 576 | 71519209 | Four Corners Facility Improvements | - | - | (3,048) | |
| 577 | 71519210 | Four Corners Facility Improvements | 17,496 | - | 279,836 | |

| | A | B | O | P | Q | R |
|---|---|---|---|---|---|---|
| 1 | **Public Service Company of New Mexico** | | | | | |
| 2 | **Schedule B-4** | | | | | |
| 3 | **Construction Work In Progress** | | | | | |
| 4 | **Base Period Ending 6/30/2026** | | | | | |
| 5 | **Test Period Ending 9/30/2028** | | | | | |
| 6 | **This schedule is sponsored by PNM Witness Gutierrez** | | | | | |
| 7 | **Project #** | **Project Description** | **Expenditures Through End of Test Period** | **Clearings Through End of Test Period** | **Test Period Ending Balance Sep-28** | **Reference** |
| 578 | | **Total Four Corners** | **11,232,130** | **(9,874,918)** | **10,369,723** | |
| 579 | | | | | | |
| 580 | | **Palo Verde 1&2** | | | | |
| 581 | 72123410 | PV U1 | 3,551,178 | (1,877,523) | 2,657,968 | |
| 582 | 72223410 | PV U2 | 8,960,270 | (14,600,273) | 9,726,827 | |
| 583 | | **Total Palo Verde 1&2** | **12,511,448** | **(16,477,796)** | **12,384,795** | |
| 584 | | | | | | |
| 585 | | **Palo Verde 3** | | | | |
| 586 | 72323410 | PV U3 | 7,653,033 | (2,560,126) | 10,366,657 | |
| 587 | | **Total Palo Verde 3** | **7,653,033** | **(2,560,126)** | **10,366,657** | |
| 588 | | | | | | |
| 589 | | **Palo Verde Common** | | | | |
| 590 | 72423410 | PV common | 11,500,743 | (7,182,453) | 22,432,009 | |
| 591 | 72523410 | PV water reclamation | 5,736,795 | (1,064,857) | 10,751,969 | |
| 592 | | **Total Palo Verde Common** | **17,237,537** | **(8,247,310)** | **33,183,978** | |
| 593 | | | | | | |
| 594 | | **Luna** | | | | |
| 595 | 74416021 | Luna Capital Improvements 2021 | - | - | 62,827 | |
| 596 | 74416024 | Luna GT1 Flexibility Upgrade | - | - | - | |
| 597 | 74416025 | Luna Capital Improvements 2025 | - | - | - | |
| 598 | 74416026 | Luna Capital Improvements 2024 | - | - | - | |
| 599 | 74416027 | Luna Capital Planned Outage 2027 | 74,110 | (474,668) | - | |
| 600 | 74416028 | Luna Capital Improvements 2028 | 513,072 | (481,157) | 31,915 | |
| 601 | 74416126 | Luna Capital Improvements 2026 | - | - | - | |
| 602 | 74416127 | Luna Capital Improvement 2027 | 690,772 | (1,483,329) | - | |
| 603 | 74416128 | Luna Capital Planned Outage 2028 | 210,088 | (90,112) | 119,976 | |
| 604 | 74416415 | Luna Capital Improvements 2019 | - | - | - | |
| 605 | 74417021 | Luna Capital Planned Outage 2021 | - | - | (64,075) | |
| 606 | 74417024 | Luna Capital Planned Outage 2024 | - | - | - | |
| 607 | 74417025 | Luna Capital Planned Outage 2025 | - | - | (0) | |

| | A | B | O | P | Q | R |
|---|---|---|---|---|---|---|
| 1 | **Public Service Company of New Mexico** | | | | | |
| 2 | **Schedule B-4** | | | | | |
| 3 | **Construction Work In Progress** | | | | | |
| 4 | **Base Period Ending 6/30/2026** | | | | | |
| 5 | **Test Period Ending 9/30/2028** | | | | | |
| 6 | **This schedule is sponsored by PNM Witness Gutierrez** | | | | | |
| 7 | **Project #** | **Project Description** | **Expenditures Through End of Test Period** | **Clearings Through End of Test Period** | **Test Period Ending Balance Sep-28** | **Reference** |
| 608 | 74417123 | Luna Capital Planned Outage 2023 | - | - | - | |
| 609 | 74417125 | Luna GT 2 GSU Transformer Replaceme | - | - | - | |
| 610 | 74417126 | Luna Capital Planned Outage 2026 | - | - | - | |
| 611 | 74418029 | Luna GT1 Hot Gas Path Inspection | 1,872,753 | - | 1,872,753 | |
| 612 | | **Total Luna** | **3,360,794** | **(2,529,266)** | **2,023,395** | |
| 613 | | | | | | |
| 614 | | **San Juan** | | | | |
| 615 | 76116001 | CBI SJ GEN ENGR FORECAST | - | - | (0) | |
| 616 | 76116011 | CBI SJ GEN ENGR | - | - | 0 | |
| 617 | 76616025 | Common Limestone Area Instrument | - | - | (399) | |
| 618 | 76616029 | Common Brine Concentrator 4 Pipe Re | - | - | (2,442) | |
| 619 | 76616311 | sj com pi data historian | - | - | (82) | |
| 620 | 78916224 | SJGS Process Pond Closures | - | - | - | |
| 621 | | **Total San Juan** | **-** | **-** | **(2,923)** | |
| 622 | | | | | | |
| 623 | | **La Luz/Peaking Generation Station** | | | | |
| 624 | 75216126 | La Luz SB-310 Compressor Blade Repl | - | - | - | |
| 625 | 75216221 | La Luz Spare GSU Transformer | - | - | 929,869 | |
| 626 | 75216425 | La Luz Non Outage Plant Capitl 2025 | - | - | 33,635 | |
| 627 | 75216427 | La Luz Non Outage Plant Capitl 2027 | 45,188 | (118,945) | - | |
| 628 | 75216428 | La Luz Non Outage Plant Capitl 2028 | 136,694 | (45,308) | 91,385 | |
| 629 | 75216625 | La Luz Mark VI E Turbine Controls | - | - | - | |
| 630 | 75216627 | La Luz Outage Plant Capital 2027 | 814,236 | (814,236) | - | |
| 631 | 75216725 | La Luz Balance of Plant Controls | - | - | - | |
| 632 | 75228025 | La Luz Oper Tech Projects 2025 | - | - | 89,328 | |
| 633 | | **Total La Luz/Peaking Generation Station** | **996,118** | **(978,490)** | **1,144,218** | |
| 634 | | | | | | |
| 635 | | **Delta/Rio Bravo** | | | | |
| 636 | 04616027 | Rio Bravo Mark VI E Turbine Control | 343,830 | (2,028,796) | - | |
| 637 | 04616127 | Rio Bravo Balance of Plant Controls | 1,260,871 | (1,265,759) | - | |

| | A | B | O | P | Q | R |
|---|---|---|---|---|---|---|
| 1 | **Public Service Company of New Mexico** | | | | | |
| 2 | **Schedule B-4** | | | | | |
| 3 | **Construction Work In Progress** | | | | | |
| 4 | **Base Period Ending 6/30/2026** | | | | | |
| 5 | **Test Period Ending 9/30/2028** | | | | | |
| 6 | **This schedule is sponsored by PNM Witness Gutierrez** | | | | | |
| 7 | **Project #** | **Project Description** | **Expenditures Through End of Test Period** | **Clearings Through End of Test Period** | **Test Period Ending Balance Sep-28** | **Reference** |
| 638 | 04616227 | Rio Bravo Turbine Major 2029 | 842,057 | - | 2,406,006 | |
| 639 | 04616327 | Rio Bravo Compressor Upgrade Pkg 3 | 57,230 | - | 894,306 | |
| 640 | 04616425 | Rio Bravo Non Outage Plant Cap 2025 | - | - | - | |
| 641 | 04616427 | Rio Bravo Non Outage Plant Cap 2027 | - | - | - | |
| 642 | 04616428 | Rio Bravo Non Outage Plant Cap 2028 | 553,805 | (295,170) | 258,635 | |
| 643 | 04616524 | Rio Bravo Outage Plant Capital 2024 | - | - | 2,020 | |
| 644 | 04616525 | Rio Bravo Outage Plant Capital 2025 | - | - | 81,658 | |
| 645 | 04616527 | Rio Bravo Outage Plant Capital 2027 | 1,552,090 | (1,552,090) | - | |
| 646 | 04616528 | Rio Bravo Outage Plant Capital 2028 | 91,417 | - | 91,417 | |
| 647 | 04616725 | Rio Bravo Emergency Hot Gas Path | - | - | - | |
| 648 | 04628024 | Rio Bravo Oper Tech Projects 2024 | - | - | - | |
| 649 | 04630525 | Rio Bravo Sfty Secrity Faclity 2025 | - | - | - | |
| 650 | | **Total Delta/Rio Bravo** | **4,701,301** | **(5,141,815)** | **3,734,041** | |
| 651 | | | | | | |
| 652 | | **Bulk Power Building Allocation** | | | | |
| 653 | 35730525 | WPM Plumbing Improvement | - | - | - | |
| 654 | 35730526 | 2026 Aztec Building A Contingency | - | - | - | |
| 655 | 35730527 | 2027 Aztec Building A Contingency | 23,634 | (23,634) | - | |
| 656 | 35730528 | 2028 Aztec Building A Contingency | 546,625 | (546,625) | - | |
| 657 | 35730924 | Gen Svcs Bldg Maint Aztec Bldg A | - | - | - | |
| 658 | 35730925 | 25-01 Aztec Building A Contingency | - | - | - | |
| 659 | 35732012 | Aztec Building renovations | - | - | (716) | |
| 660 | 35732026 | Aztec A 2nd Floor Workstations | - | - | - | |
| 661 | | **Total Bulk Power Building Allocation** | **570,259** | **(570,259)** | **(716)** | |
| 662 | | | | | | |
| 663 | | **Battery Storage** | | | | |
| 664 | 70518222 | Dist Battery Capacity Expand Phs I | - | - | 1,662 | |
| 665 | 70518223 | Dist Battery Capacity Expand Phs 2 | - | - | - | |
| 666 | 70518224 | Sandia Battery Storage 60MW | - | - | - | |
| 667 | 70518526 | Sunbelt Solar and Storage Facility | 4,940,097 | (5,941,686) | - | |

| | A | B | O | P | Q | R |
|---|---|---|---|---|---|---|
| 1 | **Public Service Company of New Mexico** | | | | | |
| 2 | **Schedule B-4** | | | | | |
| 3 | **Construction Work In Progress** | | | | | |
| 4 | **Base Period Ending 6/30/2026** | | | | | |
| 5 | **Test Period Ending 9/30/2028** | | | | | |
| 6 | **This schedule is sponsored by PNM Witness Gutierrez** | | | | | |
| 7 | **Project #** | **Project Description** | **Expenditures Through End of Test Period** | **Clearings Through End of Test Period** | **Test Period Ending Balance Sep-28** | **Reference** |
| 668 | 70528028 | Tech Doc Management 2028 | 628,358 | - | 628,358 | |
| 669 | | **Total Battery Storage** | **5,568,454** | **(5,941,686)** | **630,020** | |
| 670 | | | | | | |
| 671 | | **Production Related** | | | | |
| 672 | 09328022 | ETRM Upgrade or Replace 2023 | - | - | - | |
| 673 | 09328026 | ETRM Data Svcs Implement 2026 | - | - | 636 | |
| 674 | 09328122 | Co 3 - CPR Corp Security 2022 | - | - | - | |
| 675 | 70028023 | Enterprise Investmt Optimztn Softwr | - | - | (0) | |
| 676 | 70028025 | Enterprise Investment Optimization | - | - | 24,496 | |
| 677 | 70028028 | Port Opt Copperleaf 2028 | 1,810,250 | - | 1,810,250 | |
| 678 | 70028125 | Wildfire PSPS Decision Making | 959,852 | - | 1,892,401 | |
| 679 | 70028224 | Documentation System Upgrades | - | - | - | |
| 680 | 70028225 | Port Opt Copperleaf 2025 | - | - | - | |
| 681 | 70028227 | Data Historian SoftwareLicense 2027 | 505,103 | (1,983,991) | - | |
| 682 | 70028327 | Adv Analytics Process Mgmt SEEQ 27 | - | - | - | |
| 683 | 70028524 | Arrows DOE Phase 1 | - | - | - | |
| 684 | 70029905 | Accounting True ups | - | - | - | |
| 685 | 73128224 | Extended Day Ahead Market-EDAM 2025 | 1,335,577 | (15,235,249) | 9,407 | |
| 686 | 73128324 | GHG Cost to Bidding and GenTrader | - | - | - | |
| 687 | | **Total Production Related** | **4,610,782** | **(17,219,240)** | **3,737,191** | |
| 688 | | | | | | |
| 689 | | Undistributed Balances-184 Clearing Account | - | - | 18,332,977 | |
| 690 | | Retirement Work in Progress-108 Account | 43,449,106 | (39,162,780) | 33,109,250 | |
| 691 | | | | | | |
| 692 | | **Total PNM** | **995,754,285** | **(822,459,126)** | **803,508,436** | |
| 693 | | Plant additions not in CWIP: | | | | |
| 694 | | ARO Asset Four Corners (FERC 317) | | - | | |
| 695 | | ARO Asset Lordsburg (FERC 347) | | - | | |
| 696 | | Less CWIP Clearings to Account 105100: | | | | |
| 697 | | New Sandia 115 kV Control House | | - | | |

| | A | B | O | P | Q | R |
|---|---|---|---|---|---|---|
| 1 | **Public Service Company of New Mexico** | | | | | |
| 2 | **Schedule B-4** | | | | | |
| 3 | **Construction Work In Progress** | | | | | |
| 4 | **Base Period Ending 6/30/2026** | | | | | |
| 5 | **Test Period Ending 9/30/2028** | | | | | |
| 6 | **This schedule is sponsored by PNM Witness Gutierrez** | | | | | |
| 7 | **Project #** | **Project Description** | **Expenditures Through End of Test Period** | **Clearings Through End of Test Period** | **Test Period Ending Balance Sep-28** | **Reference** |
| 698 | | West Mesa Control House Replacement | | - | | |
| 699 | | Less CWIP Clearings Deferred to a Future Rate Case | | | | |
| 700 | | Mesa Del Sol Infrastructure Projects | | 105,988,128 | | |
| 701 | | Grid Mod - Dist Planning & Engineer | | 1,571,297 | | |
| 702 | | Less Retirement Work in Progress-108 Account | | 39,162,780 | | |
| 703 | | **Schedule B-1 Total Plant in Service - PNM Additions** | | **(675,736,921)** | | |
| 704 | | | | | | |
| 705 | | **Corporate** | | | | |
| 706 | 91128024 | Strategic Finance Replacement | - | - | - | |
| 707 | 91128027 | PowerPlan Upg or Replace 2028 | 1,580,875 | - | 1,580,875 | |
| 708 | 91128028 | MV90 Retail Upg 2028 | 51,438 | - | 51,438 | |
| 709 | 91128125 | PowerPlan Upgrade 2025 | - | - | - | |
| 710 | 91128325 | Treasury Management System | - | - | 8,966 | |
| 711 | 91128525 | PowerPlan Licensing Uplift 2025 | - | - | - | |
| 712 | 94128026 | NERC CIP Program-2026 | - | - | - | |
| 713 | 94128120 | ArcFM Upgrade to Utility Network | - | - | 16,651 | |
| 714 | 94128225 | OT Int. Sec. Network Monitoring | - | - | - | |
| 715 | 94128325 | Fortress ELA 2025 | - | - | - | |
| 716 | 94128328 | NERC CIP GRC ELA 2028 | 545,129 | (545,129) | - | |
| 717 | 94128343 | Transient Cyber Assets Upgrade | - | - | - | |
| 718 | 94128425 | NERC GRC Software 2025 | - | - | 14,589 | |
| 719 | 94128525 | Esri ELA 2025 | - | - | - | |
| 720 | 94128528 | Fortra FIM Tripwire ELA 2028 | 986,337 | (986,337) | - | |
| 721 | 94130522 | Santa Fe Office Parking Lot | - | - | - | |
| 722 | 95128124 | OT Display Wall Upg 2024 | - | - | - | |
| 723 | 95128127 | ColdFusion Upg 2027 | 14,934 | (149,425) | - | |
| 724 | 95128144 | CPR OT Assets Annual Refresh 2024 | - | - | (0) | |
| 725 | 95128145 | CPR OT Assets Annual Refresh 2025 | - | - | - | |
| 726 | 95128146 | CPR OT Assets Annual Refresh 2026 | - | - | 5,165 | |
| 727 | 95128147 | CPR OT Assets Annual Refresh 2027 | 348,551 | (993,667) | - | |

| | A | B | O | P | Q | R |
|---|---|---|---|---|---|---|
| 1 | **Public Service Company of New Mexico** | | | | | |
| 2 | **Schedule B-4** | | | | | |
| 3 | **Construction Work In Progress** | | | | | |
| 4 | **Base Period Ending 6/30/2026** | | | | | |
| 5 | **Test Period Ending 9/30/2028** | | | | | |
| 6 | **This schedule is sponsored by PNM Witness Gutierrez** | | | | | |
| 7 | **Project #** | **Project Description** | **Expenditures Through End of Test Period** | **Clearings Through End of Test Period** | **Test Period Ending Balance Sep-28** | **Reference** |
| 728 | 95128148 | CPR OT Assets Annual Refresh 2028 | 667,750 | - | 667,750 | |
| 729 | 96828045 | KnowBe4 ELA 2025-2028 | - | - | - | |
| 730 | 96828046 | ZenGRC ELA 2026 | - | - | 560 | |
| 731 | 96828047 | IBM DataStage ETL Upg 2027 | 59,232 | (202,213) | - | |
| 732 | 96828055 | Dataminr Phys Sec ELA 2025 | - | - | - | |
| 733 | 96828057 | 3rd Party Risk Mgmt Ph 1 2027 | 132,149 | (474,375) | - | |
| 734 | 96828058 | Arctic Wolf ELA 2028 | 645,217 | - | 645,217 | |
| 735 | 96828066 | CrowdStrike ELA 2026 | - | - | - | |
| 736 | 96828067 | Segmentation Network and ACI 2027 | 55,693 | (199,921) | - | |
| 737 | 96828068 | Privileged Access Mgmt ELA 2028 | 295,098 | - | 295,098 | |
| 738 | 96828086 | Network Access Control (NAC) 2026 | - | - | - | |
| 739 | 96828123 | MS Enterprise License Agrmt 2023 | - | - | - | |
| 740 | 96828145 | Corporate Applications Prog 2025 | - | - | 5,764 | |
| 741 | 96828155 | Tripwire ELA 2025 | - | - | - | |
| 742 | 96828157 | AI Detect and Correl Ph 1 2027 | 127,374 | (457,231) | - | |
| 743 | 96828165 | VMWare Virtual Desk & App ELA 2025 | - | - | - | |
| 744 | 96828167 | Segmentation NSX 2027 | 139,314 | (500,095) | - | |
| 745 | 96828185 | Web Application Modernization 2025 | - | - | - | |
| 746 | 96828224 | MS SharePoint Upgrade 2025 | - | - | 1,253 | |
| 747 | 96828226 | MS Enterprise License Agrmt 2026 | - | - | 23,064 | |
| 748 | 96828228 | CISCO SmartNet (HW) ELA 2028 | 2,367,874 | (2,367,874) | - | |
| 749 | 96828247 | Disaster Recovery Refresh (HW) 2027 | 1,020,035 | (1,989,166) | - | |
| 750 | 96828255 | Blackbaud ELA 2025 | - | - | - | |
| 751 | 96828256 | Tenable ELA 2026 | - | - | - | |
| 752 | 96828257 | Agentic AI SOC 2027 | 91,470 | (299,279) | - | |
| 753 | 96828263 | Disaster Recover Refr (HW) | - | - | - | |
| 754 | 96828267 | VMware vRealize ELA 2027 | 1,980,218 | (1,980,218) | - | |
| 755 | 96828285 | CyberArk PAM Upgrade | - | - | - | |
| 756 | 96828286 | Security Mitigation Program 2026 | - | - | 18,394 | |
| 757 | 96828346 | Corporate Applications Prog 2026 | - | - | 1,595 | |

| | A | B | O | P | Q | R |
|---|---|---|---|---|---|---|
| 1 | **Public Service Company of New Mexico** | | | | | |
| 2 | **Schedule B-4** | | | | | |
| 3 | **Construction Work In Progress** | | | | | |
| 4 | **Base Period Ending 6/30/2026** | | | | | |
| 5 | **Test Period Ending 9/30/2028** | | | | | |
| 6 | **This schedule is sponsored by PNM Witness Gutierrez** | | | | | |
| 7 | **Project #** | **Project Description** | **Expenditures Through End of Test Period** | **Clearings Through End of Test Period** | **Test Period Ending Balance Sep-28** | **Reference** |
| 758 | 96828347 | Corporate Applications Prog 2027 | 65,786 | (199,298) | - | |
| 759 | 96828357 | CUCM Upgrade 2027 | 94,172 | (308,120) | - | |
| 760 | 96828367 | Service Suite Upg 2027 | 255,957 | (999,738) | - | |
| 761 | 96828385 | Oracle ELA and Azure Cloud 2025 | - | - | - | |
| 762 | 96828386 | AI Program 2026 | - | - | 1,459 | |
| 763 | 96828387 | AI Program 2027 | 1,132,102 | (2,974,150) | - | |
| 764 | 96828388 | AI Program 2028 | 2,692,232 | - | 2,692,232 | |
| 765 | 96828425 | CPR Servers Storage 2025 | - | - | (0) | |
| 766 | 96828426 | CPR Servers Storage 2026 | - | - | 5,617 | |
| 767 | 96828427 | CPR Servers Storage 2027 | 556,730 | (1,613,723) | - | |
| 768 | 96828428 | CPR Servers Storage 2028 | 890,543 | - | 890,543 | |
| 769 | 96828452 | Dense Wavelength Div Multi (DWDM) | - | - | - | |
| 770 | 96828457 | DC OS Lifecycle Mgmt 2027 | 22,940 | (75,058) | - | |
| 771 | 96828485 | Gigamon ELA 2025 - 2028 | - | - | - | |
| 772 | 96828486 | Oracle Java License True Up 2026 | - | - | - | |
| 773 | 96828524 | CPR PCs 2024 | - | - | - | |
| 774 | 96828525 | CPR PCs 2025 | - | - | (0) | |
| 775 | 96828526 | CPR PCs 2026 | - | - | 32,127 | |
| 776 | 96828527 | CPR PCs 2027 | 582,345 | (1,499,771) | - | |
| 777 | 96828528 | CPR PCs 2028 | 1,075,842 | - | 1,075,842 | |
| 778 | 96828548 | Dark Trace ELA 2028 | 817,342 | (817,342) | - | |
| 779 | 96828567 | Shadow IT Alerting and ID Ph 1 2027 | 105,884 | (380,090) | - | |
| 780 | 96828585 | Netwrix ELA 2026 | - | - | - | |
| 781 | 96828645 | CPR Cybersecurity 2025 | - | - | - | |
| 782 | 96828646 | CPR Cybersecurity 2026 | - | - | 2,754 | |
| 783 | 96828647 | CPR Cybersecurity 2027 | 473,608 | (1,545,434) | - | |
| 784 | 96828648 | CPR Cybersecurity 2028 | 722,793 | - | 722,793 | |
| 785 | 96828657 | DC Storage Backup Modern 2027 | 41,840 | (150,192) | - | |
| 786 | 96828666 | Dataminr Cyber ELA 2026 | - | - | - | |
| 787 | 96828667 | System Process App Seg Ph 1 2027 | 125,381 | (450,078) | - | |

| | A | B | O | P | Q | R |
|---|---|---|---|---|---|---|
| 1 | **Public Service Company of New Mexico** | | | | | |
| 2 | **Schedule B-4** | | | | | |
| 3 | **Construction Work In Progress** | | | | | |
| 4 | **Base Period Ending 6/30/2026** | | | | | |
| 5 | **Test Period Ending 9/30/2028** | | | | | |
| 6 | **This schedule is sponsored by PNM Witness Gutierrez** | | | | | |
| 7 | **Project #** | **Project Description** | **Expenditures Through End of Test Period** | **Clearings Through End of Test Period** | **Test Period Ending Balance Sep-28** | **Reference** |
| 788 | 96828686 | ALM Upg and ELA 2026 | - | - | 623 | |
| 789 | 96828725 | Cybersecurity Program 2025 | - | - | - | |
| 790 | 96828748 | Adobe Licensing Agreement 2028 | 792,489 | (792,489) | - | |
| 791 | 96828757 | Email Resil Modern Sec Ph 1 2027 | 73,056 | (239,032) | - | |
| 792 | 96828764 | Gartner Support Contracts 2025 | - | - | 417,120 | |
| 793 | 96828765 | Automation Anywhere ELA 2025 | - | - | - | |
| 794 | 96828767 | TDM Decommissioning 2027 | 139,375 | (500,314) | - | |
| 795 | 96828786 | Gigamon Co-Termed ELA 2026 | - | - | 0 | |
| 796 | 96828825 | Infrast-New Capabilities Prgrm 2025 | - | - | - | |
| 797 | 96828846 | Infrast-New Capabilities Prgrm 2026 | - | - | 1,296 | |
| 798 | 96828857 | Endpoint Hardening Ph 1 2027 | 105,529 | (345,280) | - | |
| 799 | 96828867 | Texas Internet Egress via BGP 2027 | 41,731 | (149,801) | - | |
| 800 | 96828868 | PNM Foundation Blackbaud ELA 2028 | 1,340 | - | 1,340 | |
| 801 | 96828926 | Lifecycle Mgmt-Infra Prgrm 2026 | - | - | 9,458 | |
| 802 | 96828927 | Lifecycle Mgmt-Infra Prgrm 2027 | 60,959 | (218,825) | - | |
| 803 | 96828945 | Telecom-New Capabilities Prgrm 2025 | - | - | - | |
| 804 | 96828946 | Tech Adv-Future Cap Program 2026 | - | - | - | |
| 805 | 96828947 | Tech Adv-Future Cap Program 2027 | 1,288,769 | (1,288,769) | - | |
| 806 | 96828957 | Enhance Auth Modern Ph 1 2027 | 137,222 | (448,976) | - | |
| 807 | 96828965 | Tibco Platform Upg 2025 | - | - | 3,754 | |
| 808 | 96828966 | Blue Snow ELA 2026 | - | - | 193 | |
| 809 | 96828967 | VMware Cloud Found Dev 2027 | 76,498 | (250,294) | - | |
| 810 | 96829026 | Telecom-New Capabilities Prgrm 2026 | - | - | 33 | |
| 811 | 96829048 | CyberArk PAM Upgrade 2028 | 1,792 | - | 1,792 | |
| 812 | 96829057 | Gartner Support Contracts 2027 | 97,349 | (383,313) | - | |
| 813 | 96829065 | NH360 Portfolio Insights ELA | - | - | - | |
| 814 | 96829066 | SigmaFlow Upg 2026 | - | - | - | |
| 815 | 96829067 | Threat Exp Mgmt Mod Ph 1 2027 | 97,557 | (350,198) | - | |
| 816 | 96829068 | Optiv Saviynt True Up 2028 | 28,722 | (28,722) | - | |
| 817 | 96829127 | Cisco Security ELA 2027 | - | - | - | |

| | A | B | O | P | Q | R |
|---|---|---|---|---|---|---|
| 1 | **Public Service Company of New Mexico** | | | | | |
| 2 | **Schedule B-4** | | | | | |
| 3 | **Construction Work In Progress** | | | | | |
| 4 | **Base Period Ending 6/30/2026** | | | | | |
| 5 | **Test Period Ending 9/30/2028** | | | | | |
| 6 | **This schedule is sponsored by PNM Witness Gutierrez** | | | | | |
| 7 | **Project #** | **Project Description** | **Expenditures Through End of Test Period** | **Clearings Through End of Test Period** | **Test Period Ending Balance Sep-28** | **Reference** |
| 818 | 96829146 | Ent Firewall Renewal 2026 | - | - | - | |
| 819 | 96829157 | Lewisville Network Refresh 2027 | 118,797 | (350,742) | - | |
| 820 | 96829165 | AI Program 2025 | - | - | (0) | |
| 821 | 96829228 | NetApp Banner Storage ELA 2028 | 273,599 | (273,599) | - | |
| 822 | 96829247 | Broadcom ELA 2027 | - | - | - | |
| 823 | 96829256 | Denodo BI ELA 2026 | - | - | - | |
| 824 | 96829257 | Lewisville Load Balancer F5 2027 | 68,629 | (224,546) | - | |
| 825 | 96829265 | VMware vCenter, vSphere ELA 2025 | - | - | - | |
| 826 | 96829266 | Web App Mod Prog 2026 | - | - | - | |
| 827 | 96829348 | Pathlock ELA 2028 | 152,108 | (152,108) | - | |
| 828 | 96829357 | Lewisville Sec Stack Modern 2027 | 83,599 | (300,095) | - | |
| 829 | 96829358 | Fortress ELA 2028 | 439,824 | (439,824) | - | |
| 830 | 96829367 | CPR Crisis Resilience 2027 | 38,461 | (150,226) | - | |
| 831 | 96829427 | Splunk IT Core Enterprise ELA 2027 | - | - | - | |
| 832 | 96829444 | CISCO Ent Lic Agreement 2024 | - | - | - | |
| 833 | 96829446 | CPR Corp Security 2026 | - | - | 2,860 | |
| 834 | 96829447 | CPR Corp Security 2027 | 247,704 | (749,579) | - | |
| 835 | 96829448 | CPR Corp Security 2028 | 566,718 | - | 566,718 | |
| 836 | 96829457 | Network Perim File Threat 2027 | 334,986 | (1,202,494) | - | |
| 837 | 96829527 | eDOCS DM Tech Stack Upgrade 2027 | 501,311 | (1,302,177) | - | |
| 838 | 96829528 | SETA KnowBe4 ELA 2028 | 1,792 | - | 1,792 | |
| 839 | 96829557 | Network Sec Infra Auto 2027 | 27,981 | (100,443) | - | |
| 840 | 96829558 | Gartner Support Contracts 2028 | 284,243 | - | 284,243 | |
| 841 | 96829565 | ITSM 2025 SAM Pro and Integrations | - | - | - | |
| 842 | 96829625 | CPR Telecom Blanket 2025 | - | - | - | |
| 843 | 96829627 | Tanium ELA 2027 | - | - | - | |
| 844 | 96829628 | Oracle ELA 2028 | 9,920,826 | (9,920,826) | - | |
| 845 | 96829646 | CPR Telecom Blanket 2026 | - | - | 2,184 | |
| 846 | 96829647 | CPR Telecom Blanket 2027 | 355,462 | (1,250,031) | - | |
| 847 | 96829648 | CPR Telecom Blanket 2028 | 683,147 | - | 683,147 | |

| | A | B | O | P | Q | R |
|---|---|---|---|---|---|---|
| 1 | **Public Service Company of New Mexico** | | | | | |
| 2 | **Schedule B-4** | | | | | |
| 3 | **Construction Work In Progress** | | | | | |
| 4 | **Base Period Ending 6/30/2026** | | | | | |
| 5 | **Test Period Ending 9/30/2028** | | | | | |
| 6 | **This schedule is sponsored by PNM Witness Gutierrez** | | | | | |
| 7 | **Project #** | **Project Description** | **Expenditures Through End of Test Period** | **Clearings Through End of Test Period** | **Test Period Ending Balance Sep-28** | **Reference** |
| 848 | 96829665 | Enterprise Backup Replacement 2025 | - | - | - | |
| 849 | 96829666 | Microsoft CSP ELA and Azure 2026 | - | - | - | |
| 850 | 96829728 | ServiceNow ELA 2028 | 5,640,099 | (5,640,099) | - | |
| 851 | 96829757 | Traka ELA 2027 | - | - | - | |
| 852 | 96829765 | Adobe Licensing Agreement 2025 | - | - | - | |
| 853 | 96829766 | Enterprise Data Storage Refr 2026 | - | - | 177 | |
| 854 | 96829825 | RedHat ELA 2025 | - | - | - | |
| 855 | 96829827 | Infoblox ELA 2027 | 179,948 | (346,972) | - | |
| 856 | 96829845 | DFIN Collaboration ELA 2026 | - | - | - | |
| 857 | 96829857 | Privil Sys Session Mgmt Ph 1 2027 | 105,884 | (380,090) | - | |
| 858 | 96829865 | Windows 11 2025 | - | - | - | |
| 859 | 96829866 | Cognos Upgrade 2026 | - | - | 1,438 | |
| 860 | 96829926 | Security Video System 2026 | - | - | - | |
| 861 | 96829928 | Mythos-Ready AI Cyber Def Prog 2028 | 7,392,872 | - | 7,392,872 | |
| 862 | 96829945 | CPR Corp Security 2025 | - | - | - | |
| 863 | 96829957 | RSM Qualys Portal PCI Scans 2027 | 19,427 | (69,736) | - | |
| 864 | 96829966 | Identity Access Mgmt (IAM) 2026 | - | - | 21,428 | |
| 865 | 96830525 | Aztec Data Center Chillers | - | - | - | |
| 866 | 96830526 | Data Center Cooling Towers Repl | - | - | - | |
| 867 | 96830625 | Aztec DC Office Improvements 2025 | - | - | (0) | |
| 868 | 96830626 | Data Center BTS Help Desk Cubicles | - | - | - | |
| 869 | 96830725 | Data Center UPS Battery Backups | - | - | - | |
| 870 | 96830726 | Data Center NOC Split Systems | - | - | - | |
| 871 | 96830826 | Data Center Shed and Paving | - | - | - | |
| 872 | 96831007 | Gen Svcs Maint Blankt - Data Center | 499,946 | (499,946) | - | |
| 873 | 96834025 | Data Center UPS Battery Backups | - | - | 407 | |
| 874 | 96834157 | DC Server HW Ref 2027 | 25,472 | (200,080) | - | |
| 875 | 96834158 | DC Server HW Ref 2028 | 697,992 | - | 697,992 | |
| 876 | 97130526 | TXNM Farmington Office | - | - | 2,550 | |
| 877 | 97131007 | Gen Svcs Maint Blanket - Farmington | 50,000 | (50,000) | - | |

| | A | B | O | P | Q | R |
|---|---|---|---|---|---|---|
| 1 | **Public Service Company of New Mexico** | | | | | |
| 2 | **Schedule B-4** | | | | | |
| 3 | **Construction Work In Progress** | | | | | |
| 4 | **Base Period Ending 6/30/2026** | | | | | |
| 5 | **Test Period Ending 9/30/2028** | | | | | |
| 6 | **This schedule is sponsored by PNM Witness Gutierrez** | | | | | |
| 7 | **Project #** | **Project Description** | **Expenditures Through End of Test Period** | **Clearings Through End of Test Period** | **Test Period Ending Balance Sep-28** | **Reference** |
| 878 | 97230625 | Masthead TPO Roof | - | - | - | |
| 879 | 97230725 | Masthead HVAC RTU Replacement | - | - | 5,695 | |
| 880 | 97231007 | Gen Svcs Maint Blanket- Masthead | 50,000 | (50,000) | - | |
| 881 | 97231026 | Masthead 2nd Floor Conference Room | - | - | 49,433 | |
| 882 | 97728024 | Phy Sec-New Capabilities Prgrm 2024 | - | - | 0 | |
| 883 | 97728025 | Phys Sec New Cap Prog 2025 | - | - | - | |
| 884 | 97728026 | Phys Sec New Cap Prog 2026 | - | - | - | |
| 885 | 97728027 | Phys Sec New Cap Prog 2027 | 302,228 | (799,255) | - | |
| 886 | 97728126 | Genetec ELA 2026 | - | - | 320 | |
| 887 | 97728128 | C Cure ELA 2027 | 119,691 | (119,691) | - | |
| 888 | 97728225 | Business Cont SNOW 2025 | - | - | - | |
| 889 | 97728228 | EVMS Upg or Replace 2028 | 298,404 | - | 298,404 | |
| 890 | 97730018 | Building Maintenance Truck Replace | - | - | - | |
| 891 | 97730024 | 2024 - Gen Svcs Bldg Maint Vehicle | - | - | - | |
| 892 | 97730125 | 2025 Gen Svcs Bldg Maint Vehicle 2 | - | - | - | |
| 893 | 97730524 | General Bldg and MRF Upgrades | 1,057,911 | (1,057,911) | - | |
| 894 | 97730525 | Employee Parking Elevator Rebuilds | - | - | 3,233 | |
| 895 | 97730526 | HQ Cooling Towers Replacement | - | - | - | |
| 896 | 97730624 | HQ Roof Replacement 2024 | - | - | - | |
| 897 | 97730625 | HQ Chillers Replacement | - | - | 33,748 | |
| 898 | 97730725 | PNM HQ Executive Gates | - | - | - | |
| 899 | 97731007 | Gen Svcs Bldg Maint Blanket - Corp | 4,420,667 | (4,628,938) | (2,707) | |
| 900 | 97731121 | HQ Building Boiler Upgrades | - | - | - | |
| 901 | 97732025 | HQ Video Sec Augmentation 2025 | - | - | 80,171 | |
| 902 | 97734126 | Security Mitigation Program 2026 | - | - | 41 | |
| 903 | 98628124 | EAM Modernization | 181,297 | (33,801,538) | 500,143 | |
| 904 | 98628224 | Maximo Distribution Asset Mgmt 2024 | - | - | 31,348 | |
| 905 | 99329907 | Payroll Accrual 2015 | - | - | 77,025 | |
| 906 | | | | | | |
| 907 | | Undistributed Balances-184 Clearing Account | - | - | 1,594,662 | |

| | A | B | O | P | Q | R |
|---|---|---|---|---|---|---|
| 1 | **Public Service Company of New Mexico** | | | | | |
| 2 | **Schedule B-4** | | | | | |
| 3 | **Construction Work In Progress** | | | | | |
| 4 | **Base Period Ending 6/30/2026** | | | | | |
| 5 | **Test Period Ending 9/30/2028** | | | | | |
| 6 | **This schedule is sponsored by PNM Witness Gutierrez** | | | | | |
| 7 | **Project #** | **Project Description** | **Expenditures Through End of Test Period** | **Clearings Through End of Test Period** | **Test Period Ending Balance Sep-28** | **Reference** |
| 908 | | Retirement Work in Progress-108 Account | - | - | 1,138 | |
| 909 | | | | | | |
| 910 | | **Total Corporate** | **58,847,597** | **(91,214,884)** | **21,525,817** | |
| 911 | | Less CWIP Clearings Deferred to a Future Rate Case | | | | |
| 912 | | ColdFusion Upg 2027 | | 28,391 | | |
| 913 | | CPR OT Assets Annual Refresh 2027 | | 188,797 | | |
| 914 | | Phys Sec New Cap Prog 2027 | | 575,463 | | |
| 915 | | C Cure ELA 2027 | | 86,178 | | |
| 916 | | General Bldg and MRF Upgrades | | 21,158 | | |
| 917 | | Gen Svcs Bldg Maint Blanket - Corp | | 92,579 | | |
| 918 | | EAM Modernization | | 15,548,708 | | |
| 919 | | Less Retirement Work in Progress-108 Account | | - | | |
| 920 | | **Schedule B-1 Total Corporate Plant in Service Additions** | | **(74,673,611)** | | |

| | A |
|---|---|
| 1 | **Public Service Company of New Mexico** |
| 2 | **Schedule B-4** |
| 3 | **Construction Work In Progress (Notes)** |
| 4 | **Base Period Ending 6/30/2026** |
| 5 | **Test Period Ending 9/30/2028** |
| 6 | **This schedule is sponsored by PNM Witness Gutierrez** |
| 7 | |
| 8 | (1) See the Direct Testimony and Exhibits of PNM Witness Flores-Olivas for additional project information |
| 9 | (2) See the Direct Testimony and Exhibits of PNM Witness Gray for additional project information |
| 10 | (3) See the Direct Testimony and Exhibits of PNM Witness Phelps for additional project information |
| 11 | (4) See the Direct Testimony and Exhibits of PNM Witness Sanchez for additional project information |
| 12 | (5) Additional project information is generally not included in direct testimony and exhibits for projects with less |
| 13 | than $25,000 in combined absolute value of clearings during linkage and the test period |
| 14 | (6) Temporary line extension forecast to clear to operating & maintenance expense instead of plant additions |
| 15 | during linkage and the test period. |
| 16 | (7) Economic development project addressed by the proceedings for NMPRC Case No. 25-00088-UT. Ratemaking |
| 17 | and cost recovery treatment are deferred to a future PNM general rate case. |
| 18 | (8) Ratemaking and cost recovery treatment are deferred to a future PNM general rate case for all or a portion |
| 19 | of this project. |
| 20 | References of "Blanket" at the Estimated Completion Date and Estimated Cost of Project columns are related to |
| 21 | ongoing blanket projects. |
| 22 | Please see the Direct Testimony and Exhibits of PNM Witnesses Gray, Sanchez, Phelps, and Flores-Olivas |
| 23 | for discussion of adjustments/changes to the base period. |
| 24 | Base period data is historical information from the Company's Book Balance Amounts. |

# PNM Schedule B-5

Allowance for funds used during construction transferred to plant in service

| | A | B | C | D | E | F |
|---|---|---|---|---|---|---|
| 1 | **Public Service Company of New Mexico** | | | | | |
| 2 | **Schedule B-5** | | | | | |
| 3 | **Allowance For Funds Used During Construction** | | | | | |
| 4 | **Base Period Ending 6/30/2026** | | | | | |
| 5 | **Test Period Ending 9/30/2028** | | | | | |
| 6 | **This schedule is sponsored by PNM Witness Gutierrez** | | | | | |
| 7 | **Description** | **Year Jan-21 - Dec-21** | **Year Jan-22 - Dec-22** | **Year Jan-23 - Dec-23** | **Year Jan-24 - Dec-24** | **Six Months Jan-25 - Jun-25** |
| 8 | | | | | | |
| 9 | Capitalization Rates | 6.64% | 5.96% | 6.23% | 6.49% | 6.24% |
| 10 | | | | | | |
| 11 | AFUDC Generated less Nuclear Fuel (Ties to GL 107) | 9,521,974 | 9,784,616 | 16,618,595 | 22,935,880 | 8,716,579 |
| 12 | | | | | | |
| 13 | AFUDC Generated | 9,521,974 | 9,784,616 | 16,618,595 | 22,935,880 | 8,716,579 |
| 14 | | | | | | |
| 15 | | | | | | |
| 16 | | | | | | |
| 17 | AFUDC Cleared to Plant | 6,238,303 | 6,053,879 | 9,316,828 | 25,831,993 | 3,915,053 |
| 18 | | | | | | |
| 19 | AFUDC Cleared to Plant | 6,238,303 | 6,053,879 | 9,316,828 | 25,831,993 | 3,915,053 |
| 20 | | | | | | |
| 21 | Notes: | | | | | |
| 22 | Base period data is historical information from the | | | | | |
| 23 | Company's Book Balance Amounts. | | | | | |

| | A | G | H | I | J | K |
|---|---|---|---|---|---|---|
| 1 | **Public Service Company of New Mexico** | | | | | |
| 2 | **Schedule B-5** | | | | | |
| 3 | **Allowance For Funds Used During Construction** | | | | | |
| 4 | **Base Period Ending 6/30/2026** | | | | | |
| 5 | **Test Period Ending 9/30/2028** | | | | | |
| 6 | **This schedule is sponsored by PNM Witness Gutierrez** | | | | | |
| 7 | **Description** | **Base Period Jul-25 - Jun-26** | **Linkage 1 Jul-26 - Jun-27** | **Linkage 2 Oct-26 - Sept-27** | **Test Period Oct-27 - Sept-28** | **Reference** |
| 8 | | | | | | |
| 9 | Capitalization Rates | 6.12% | 6.20% | 6.24% | 6.63% | |
| 10 | | | | | | |
| 11 | AFUDC Generated less Nuclear Fuel (Ties to GL 107) | 22,831,935 | 20,512,493 | 32,045,117 | 44,826,264 | |
| 12 | | | | | | |
| 13 | AFUDC Generated | 22,831,935 | 20,512,493 | 32,045,117 | 44,826,264 | |
| 14 | | | | | | |
| 15 | | | | | | |
| 16 | | | | | | |
| 17 | AFUDC Cleared to Plant | 23,118,047 | 12,092,798 | 25,601,023 | 28,908,220 | |
| 18 | | | | | | |
| 19 | AFUDC Cleared to Plant | 23,118,047 | 12,092,798 | 25,601,023 | 28,908,220 | |
| 20 | | | | | | |
| 21 | Notes: | | | | | |
| 22 | Base period data is historical information from the | | | | | |
| 23 | Company's Book Balance Amounts. | | | | | |

# PNM Schedule B-6

Plant held for future use

| | A | B | C | D | E |
|---|---|---|---|---|---|
| 1 | **Public Service Company Of New Mexico** | | | | |
| 2 | **Schedule B-6** | | | | |
| 3 | **Original Cost Of Plant In Service - Plant Held For Future Use** | | | | |
| 4 | **Base Period Ending 6/30/2026** | | | | |
| 5 | **Test Period Ending 9/30/2028** | | | | |
| 6 | **This schedule is sponsored by PNM Witness Gutierrez** | | | | |
| 7 | | | | | |
| 8 | **Anticipated Use, Property Description and Location** | **Date Originally Included in Account** | **Date to be Placed in Service** | **Unadjusted Base Period Balance Jun-26** | **Base Period Adjustment** |
| 9 | **Land & Land Rights** | | | | |
| 10 | Claremont Station | 12/31/2025 | Unknown | 1,431,700 | - |
| 11 | Bernalillo County, NM | | | | |
| 12 | Sandia Science & Tech Park | 10/22/2020 | Unknown | 1,240,830 | - |
| 13 | Bernalillo, NM | | | | |
| 14 | San Juan Common Land | 9/30/2022 | Unknown | 1,080,477 | - |
| 15 | San Juan County, NM | | | | |
| 16 | North Albuquerque Acres | 12/31/2025 | Unknown | 611,153 | - |
| 17 | Bernalillo County, NM | | | | |
| 18 | La Cueva Substation Site | 2/28/2014 | Unknown | 530,921 | - |
| 19 | Albuquerque, NM | | | | |
| 20 | Pachman Right of Way | 9/28/2007 | Unknown | 319,859 | - |
| 21 | Rio Rancho, NM | | | | |
| 22 | Prager Station | 12/31/1994 | Unknown | 311,280 | - |
| 23 | Albuquerque, NM | | | | |
| 24 | Santa Fe Service Center | 12/31/1994 | Unknown | 207,690 | - |
| 25 | Santa Fe, NM | | | | |
| 26 | La Luz Land Generation Site | 9/30/2014 | Unknown | 162,022 | - |
| 27 | Belen, NM | | | | |

| | A | B | C | D | E |
|---|---|---|---|---|---|
| 1 | **Public Service Company Of New Mexico** | | | | |
| 2 | **Schedule B-6** | | | | |
| 3 | **Original Cost Of Plant In Service - Plant Held For Future Use** | | | | |
| 4 | **Base Period Ending 6/30/2026** | | | | |
| 5 | **Test Period Ending 9/30/2028** | | | | |
| 6 | **This schedule is sponsored by PNM Witness Gutierrez** | | | | |
| 7 | | | | | |
| 8 | **Anticipated Use, Property Description and Location** | **Date Originally Included in Account** | **Date to be Placed in Service** | **Unadjusted Base Period Balance Jun-26** | **Base Period Adjustment** |
| 28 | Former Grindstone Sub Site | 12/31/2002 | Unknown | 86,347 | - |
| 29 | Ruidoso, NM | | | | |
| 30 | Former Hidalgo All American | 12/31/2002 | Unknown | 14,456 | - |
| 31 | Silver City, NM | | | | |
| 32 | North Albuquerque Acres Substation Site | 9/30/1986 | Unknown | 1,800 | - |
| 33 | Bernalillo County, NM | | | | |
| 34 | Enchanted Hills Substation Site | 9/30/1997 | Unknown | 339 | - |
| 35 | Rio Rancho, NM | | | | |
| 36 | **Other Station Equipment & Improvements** | | | | |
| 37 | Sandia Station Equipment | 12/31/2024 | Unknown | 7,053,690 | - |
| 38 | Bernalillo County, NM | | | | |
| 39 | West Mesa Station Equipment | 12/31/2024 | Unknown | 9,214,817 | - |
| 40 | Bernalillo County, NM | | | | |
| 41 | **Other Transmission Lines** | | | | |
| 42 | Huning Ranch-Los Morros Equipment | 3/31/2025 | Unknown | 2,093,097 | - |
| 43 | Valencia County, NM | | | | |
| 44 | **Total** | | | **24,360,478** | **-** |
| 45 | Notes: Base period data is historical information from the Company's Book Balance Amounts. | | | | |

| | A | B | C | F | G | H |
|---|---|---|---|---|---|---|
| 1 | **Public Service Company Of New Mexico** | | | | | |
| 2 | **Schedule B-6** | | | | | |
| 3 | **Original Cost Of Plant In Service - Plant Held For Future Use** | | | | | |
| 4 | **Base Period Ending 6/30/2026** | | | | | |
| 5 | **Test Period Ending 9/30/2028** | | | | | |
| 6 | **This schedule is sponsored by PNM Witness Gutierrez** | | | | | |
| 7 | | | | | | |
| 8 | **Anticipated Use, Property Description and Location** | **Date Originally Included in Account** | **Date to be Placed in Service** | **Adjusted Base Period** | **Linkage Balance Sep-27** | **Test Period Balance Sep-28** |
| 9 | **Land & Land Rights** | | | | | |
| 10 | Claremont Station | 12/31/2025 | Unknown | 1,431,700 | 1,431,700 | 1,431,700 |
| 11 | Bernalillo County, NM | | | | | |
| 12 | Sandia Science & Tech Park | 10/22/2020 | Unknown | 1,240,830 | 1,240,830 | 1,240,830 |
| 13 | Bernalillo, NM | | | | | |
| 14 | San Juan Common Land | 9/30/2022 | Unknown | 1,080,477 | 1,080,477 | 1,080,477 |
| 15 | San Juan County, NM | | | | | |
| 16 | North Albuquerque Acres | 12/31/2025 | Unknown | 611,153 | 611,153 | 611,153 |
| 17 | Bernalillo County, NM | | | | | |
| 18 | La Cueva Substation Site | 2/28/2014 | Unknown | 530,921 | 530,921 | 530,921 |
| 19 | Albuquerque, NM | | | | | |
| 20 | Pachman Right of Way | 9/28/2007 | Unknown | 319,859 | 319,859 | 319,859 |
| 21 | Rio Rancho, NM | | | | | |
| 22 | Prager Station | 12/31/1994 | Unknown | 311,280 | 311,280 | 311,280 |
| 23 | Albuquerque, NM | | | | | |
| 24 | Santa Fe Service Center | 12/31/1994 | Unknown | 207,690 | 207,690 | 207,690 |
| 25 | Santa Fe, NM | | | | | |
| 26 | La Luz Land Generation Site | 9/30/2014 | Unknown | 162,022 | 162,022 | 162,022 |
| 27 | Belen, NM | | | | | |

| | A | B | C | F | G | H |
|---|---|---|---|---|---|---|
| 1 | **Public Service Company Of New Mexico** | | | | | |
| 2 | **Schedule B-6** | | | | | |
| 3 | **Original Cost Of Plant In Service - Plant Held For Future Use** | | | | | |
| 4 | **Base Period Ending 6/30/2026** | | | | | |
| 5 | **Test Period Ending 9/30/2028** | | | | | |
| 6 | **This schedule is sponsored by PNM Witness Gutierrez** | | | | | |
| 7 | | | | | | |
| 8 | **Anticipated Use, Property Description and Location** | **Date Originally Included in Account** | **Date to be Placed in Service** | **Adjusted Base Period** | **Linkage Balance Sep-27** | **Test Period Balance Sep-28** |
| 28 | Former Grindstone Sub Site | 12/31/2002 | Unknown | 86,347 | 86,347 | 86,347 |
| 29 | Ruidoso, NM | | | | | |
| 30 | Former Hidalgo All American | 12/31/2002 | Unknown | 14,456 | 14,456 | 14,456 |
| 31 | Silver City, NM | | | | | |
| 32 | North Albuquerque Acres Substation Site | 9/30/1986 | Unknown | 1,800 | 1,800 | 1,800 |
| 33 | Bernalillo County, NM | | | | | |
| 34 | Enchanted Hills Substation Site | 9/30/1997 | Unknown | 339 | 339 | 339 |
| 35 | Rio Rancho, NM | | | | | |
| 36 | **Other Station Equipment & Improvements** | | | | | |
| 37 | Sandia Station Equipment | 12/31/2024 | Unknown | 7,053,690 | 7,053,690 | 7,053,690 |
| 38 | Bernalillo County, NM | | | | | |
| 39 | West Mesa Station Equipment | 12/31/2024 | Unknown | 9,214,817 | 9,214,817 | 9,214,817 |
| 40 | Bernalillo County, NM | | | | | |
| 41 | **Other Transmission Lines** | | | | | |
| 42 | Huning Ranch-Los Morros Equipment | 3/31/2025 | Unknown | 2,093,097 | 2,093,097 | 2,093,097 |
| 43 | Valencia County, NM | | | | | |
| 44 | **Total** | | | **24,360,478** | **24,360,478** | **24,360,478** |
| 45 | Notes: Base period data is historical information from the Company's Book Balance Amounts. | | | | | |

# PNM Schedule B-7

Nuclear fuel in process

| | A | B | C | D | E | F | G | H |
|---|---|---|---|---|---|---|---|---|
| 1 | **Public Service Company Of New Mexico** | | | | | | | |
| 2 | **Schedule B-7 Nuclear Fuel in Process** | | | | | | | |
| 3 | Lead Sheet | | | | | | | |
| 4 | **Note: Base period data is historical information from the Company's Books and Records.** | | | | | | | |
| 5 | This schedule is sponsored by PNM Witness Gutierrez | | | | | | | |
| 6 | **Description** | **Base Period Beginning Balance June 2025** | **Change Jul-25** | **Change Aug-25** | **Change Sept-25** | **Change Oct-25** | **Change Nov-25** | **Change Dec-25** |
| 7 | | | | | | | | |
| 8 | Fuel in Process | | | | | | | |
| 9 | 120.1 Palo Verde Unit 1 | 100,968 | 3,883 | 2,756 | 4,646 | 2,915 | 5,873 | 5,981 |
| 10 | 120.1 Palo Verde Unit 2 | 574,039 | 10,274 | 17,367 | 4,914 | 19,504 | 15,499 | 681,279 |
| 11 | 120.1 Palo Verde Unit 3 | 2,209,342 | 297,234 | (46,120) | 126,753 | (2,551,006) | 90,874 | (65,562) |
| 12 | 120.1 Palo Verde Common | 46,953,275 | 242,983 | 308,780 | 2,223,558 | (8,405,455) | 208,338 | 2,689,824 |
| 13 | Total 120.1 | 49,837,625 | 554,374 | 282,783 | 2,359,871 | (10,934,041) | 320,584 | 3,311,522 |
| 14 | | | | | | | | |
| 15 | Fuel Stock | | | | | | | |
| 16 | 120.2 Palo Verde Unit 1 | 402,102 | - | - | - | - | - | - |
| 17 | 120.2 Palo Verde Unit 2 | - | - | - | - | - | - | - |
| 18 | 120.2 Palo Verde Unit 3 | 255,070 | - | - | - | 11,427,369 | (11,427,369) | - |
| 19 | 120.2 Palo Verde Common | - | - | - | - | - | - | - |
| 20 | Total 120.2 | 657,172 | - | - | - | 11,427,369 | (11,427,369) | - |
| 21 | | | | | | | | |
| 22 | Fuel in Core | | | | | | | |
| 23 | 120.3 Palo Verde Unit 1 | 6,510,965 | - | - | - | - | - | - |
| 24 | 120.3 Palo Verde Unit 2 | 24,522,715 | - | - | - | - | - | - |
| 25 | 120.3 Palo Verde Unit 3 | 27,408,787 | - | - | - | (11,610,022) | 11,427,369 | - |
| 26 | Total 120.3 | 58,442,468 | - | - | - | (11,610,022) | 11,427,369 | - |
| 27 | | | | | | | | |
| 28 | Spent Fuel | | | | | | | |
| 29 | 120.4 Palo Verde Unit 1 | - | - | - | - | - | - | - |
| 30 | 120.4 Palo Verde Unit 2 | - | - | - | - | - | - | - |
| 31 | 120.4 Palo Verde Unit 3 | - | - | - | - | 11,610,022 | (11,610,022) | - |
| 32 | Total 120.4 | - | - | - | - | 11,610,022 | (11,610,022) | - |
| 33 | | | | | | | | |
| 34 | Fuel Amortization **(Note 1)** | | | | | | | |
| 35 | 120.5 Palo Verde Unit 1 | (2,529,738) | (95,232) | (95,532) | (92,568) | (95,732) | (92,640) | (95,686) |
| 36 | 120.5 Palo Verde Unit 2 | (10,208,161) | (695,206) | (695,250) | (667,314) | (696,036) | (673,978) | (696,523) |
| 37 | 120.5 Palo Verde Unit 3 | (19,312,652) | (680,748) | (680,501) | (658,329) | (170,792) | 11,610,022 | (630,611) |
| 38 | Total 120.5 | (32,050,552) | (1,471,186) | (1,471,283) | (1,418,210) | (962,560) | 10,843,405 | (1,422,820) |
| 39 | | | | | | | | |
| 40 | Total | 76,886,713 | (916,813) | (1,188,500) | 941,661 | (469,233) | (446,034) | 1,888,701 |
| 41 | **Summary of Activity** | | | | | | | |
| 42 | Palo Verde | 76,886,713 | (916,813) | (1,188,500) | 941,661 | (469,233) | (446,034) | 1,888,701 |
| 43 | | | | | | | | |
| 44 | **Balances** | | | | | | | |
| 45 | Palo Verde Balance | 76,886,713 | 75,969,900 | 74,781,400 | 75,723,062 | 75,253,829 | 74,807,795 | 76,696,497 |
| 46 | | | | | | | | |
| 47 | | | | | | | | |

| | A | I | J | K | L | M | N | O |
|---|---|---|---|---|---|---|---|---|
| 1 | **Public Service Company Of New Mexico** | | | | | | | |
| 2 | **Schedule B-7 Nuclear Fuel in Process** | | | | | | | |
| 3 | Lead Sheet | | | | | | | |
| 4 | **Note: Base period data is historical information from the Company's Books and Records.** | | | | | | | |
| 5 | This schedule is sponsored by PNM Witness Gutierrez | | | | | | | |
| 6 | **Description** | **Change Jan-26** | **Change Feb-26** | **Change Mar-26** | **Change Apr-26** | **Change May-26** | **Change Jun-26** | **Base Period Ending Balance** |
| 7 | | | | | | | | |
| 8 | Fuel in Process | | | | | | | |
| 9 | 120.1 Palo Verde Unit 1 | 141,074 | 3,778 | 139,525 | (3,624) | 170,250 | 84,386 | 662,411 |
| 10 | 120.1 Palo Verde Unit 2 | (76,940) | 325,039 | 683,850 | (2,243,340) | 45,198 | 39,467 | 96,151 |
| 11 | 120.1 Palo Verde Unit 3 | 196,639 | 6,641 | 8,059 | (64,498) | 11,314 | 242,737 | 462,409 |
| 12 | 120.1 Palo Verde Common | 223,318 | 745,380 | 3,404,215 | (6,877,308) | 213,104 | 1,233,690 | 43,163,702 |
| 13 | Total 120.1 | 484,091 | 1,080,838 | 4,235,649 | (9,188,770) | 439,866 | 1,600,280 | 44,384,673 |
| 14 | | | | | | | | |
| 15 | Fuel Stock | | | | | | | |
| 16 | 120.2 Palo Verde Unit 1 | - | - | - | - | - | - | 402,102 |
| 17 | 120.2 Palo Verde Unit 2 | - | - | - | 10,419,122 | (10,419,122) | - | - |
| 18 | 120.2 Palo Verde Unit 3 | - | - | - | - | - | - | 255,070 |
| 19 | 120.2 Palo Verde Common | - | - | - | - | - | - | - |
| 20 | Total 120.2 | - | - | - | 10,419,122 | (10,419,122) | - | 657,172 |
| 21 | | | | | | | | |
| 22 | Fuel in Core | | | | | | | |
| 23 | 120.3 Palo Verde Unit 1 | - | - | - | - | - | - | 6,510,965 |
| 24 | 120.3 Palo Verde Unit 2 | - | - | - | (10,577,648) | 10,419,122 | - | 24,364,189 |
| 25 | 120.3 Palo Verde Unit 3 | - | - | - | - | - | - | 27,226,134 |
| 26 | Total 120.3 | - | - | - | (10,577,648) | 10,419,122 | - | 58,101,288 |
| 27 | | | | | | | | |
| 28 | Spent Fuel | | | | | | | |
| 29 | 120.4 Palo Verde Unit 1 | - | - | - | - | - | - | - |
| 30 | 120.4 Palo Verde Unit 2 | - | - | - | 10,577,648 | (10,577,648) | - | - |
| 31 | 120.4 Palo Verde Unit 3 | - | - | - | - | - | - | - |
| 32 | Total 120.4 | - | - | - | 10,577,648 | (10,577,648) | - | - |
| 33 | | | | | | | | |
| 34 | Fuel Amortization **(Note 1)** | | | | | | | |
| 35 | 120.5 Palo Verde Unit 1 | (95,630) | (86,256) | (95,412) | (92,212) | (95,139) | (91,121) | (3,652,897) |
| 36 | 120.5 Palo Verde Unit 2 | (696,757) | (629,259) | (410,853) | (133,434) | 10,061,143 | (652,644) | (6,794,272) |
| 37 | 120.5 Palo Verde Unit 3 | (727,863) | (646,376) | (728,026) | (704,610) | (728,347) | (699,829) | (14,758,661) |
| 38 | Total 120.5 | (1,520,249) | (1,361,891) | (1,234,290) | (930,256) | 9,237,657 | (1,443,594) | (25,205,831) |
| 39 | | | | | | | | |
| 40 | Total | (1,036,158) | (281,053) | 3,001,359 | 300,096 | (900,125) | 156,687 | 77,937,302 |
| 41 | **Summary of Activity** | | | | | | | |
| 42 | Palo Verde | (1,036,158) | (281,053) | 3,001,359 | 300,096 | (900,125) | 156,687 | 77,937,302 |
| 43 | | | | | | | | |
| 44 | **Balances** | | | | | | | |
| 45 | Palo Verde Balance | 75,660,339 | 75,379,285 | 78,380,644 | 78,680,741 | 77,780,615 | 77,937,302 | 77,937,302 |
| 46 | | | | | | | | |
| 47 | | | | | | | | |

| | A | P | Q | R | S |
|---|---|---|---|---|---|
| 1 | **Public Service Company Of New Mexico** | | | | |
| 2 | **Schedule B-7 Nuclear Fuel in Process** | | | | |
| 3 | Lead Sheet | | | | |
| 4 | **Note: Base period data is historical information from the Company's Books and Records.** | | | | |
| 5 | This schedule is sponsored by PNM Witness Gutierrez | | | | |
| 6 | **Description** | **13-Mo Average Balance** | **13-Mo Average Adjustment** | **Total Base Adjustment** | **Adjusted Base Period** |
| 7 | | | | | |
| 8 | Fuel in Process | | | | |
| 9 | 120.1 Palo Verde Unit 1 | 260,653 | (401,758) | (401,758) | 260,653 |
| 10 | 120.1 Palo Verde Unit 2 | 784,097 | 687,946 | 687,946 | 784,097 |
| 11 | 120.1 Palo Verde Unit 3 | 898,048 | 435,640 | 435,640 | 898,048 |
| 12 | 120.1 Palo Verde Common | 44,884,504 | 1,720,802 | 1,720,802 | 44,884,504 |
| 13 | Total 120.1 | 46,827,302 | 2,442,629 | 2,442,629 | 46,827,302 |
| 14 | | | | | |
| 15 | Fuel Stock | | | | |
| 16 | 120.2 Palo Verde Unit 1 | 402,102 | - | - | 402,102 |
| 17 | 120.2 Palo Verde Unit 2 | 801,471 | 801,471 | 801,471 | 801,471 |
| 18 | 120.2 Palo Verde Unit 3 | 1,134,099 | 879,028 | 879,028 | 1,134,099 |
| 19 | 120.2 Palo Verde Common | - | - | - | - |
| 20 | Total 120.2 | 2,337,672 | 1,680,499 | 1,680,499 | 2,337,672 |
| 21 | | | | | |
| 22 | Fuel in Core | | | | |
| 23 | 120.3 Palo Verde Unit 1 | 6,510,965 | - | - | 6,510,965 |
| 24 | 120.3 Palo Verde Unit 2 | 23,684,661 | (679,527) | (679,527) | 23,684,661 |
| 25 | 120.3 Palo Verde Unit 3 | 26,403,307 | (822,827) | (822,827) | 26,403,307 |
| 26 | Total 120.3 | 56,598,933 | (1,502,355) | (1,502,355) | 56,598,933 |
| 27 | | | | | |
| 28 | Spent Fuel | | | | |
| 29 | 120.4 Palo Verde Unit 1 | - | - | - | - |
| 30 | 120.4 Palo Verde Unit 2 | 813,665 | 813,665 | 813,665 | 813,665 |
| 31 | 120.4 Palo Verde Unit 3 | 893,079 | 893,079 | 893,079 | 893,079 |
| 32 | Total 120.4 | 1,706,744 | 1,706,744 | 1,706,744 | 1,706,744 |
| 33 | | | | | |
| 34 | Fuel Amortization **(Note 1)** | | | | |
| 35 | 120.5 Palo Verde Unit 1 | (3,094,089) | 558,808 | 558,808 | (3,094,089) |
| 36 | 120.5 Palo Verde Unit 2 | (12,446,321) | (5,652,049) | (5,652,049) | (12,446,321) |
| 37 | 120.5 Palo Verde Unit 3 | (15,473,461) | (714,800) | (714,800) | (15,473,461) |
| 38 | Total 120.5 | (31,013,872) | (5,808,041) | (5,808,041) | (31,013,872) |
| 39 | | | | | |
| 40 | Total | 76,456,779 | (1,480,523) | (1,480,523) | 76,456,779 |
| 41 | **Summary of Activity** | | | | |
| 42 | Palo Verde | 76,456,779 | (1,480,523) | (1,480,523) | 76,456,779 |
| 43 | | | | | |
| 44 | **Balances** | | | | |
| 45 | Palo Verde Balance | 76,456,779 | (1,480,523) | (1,480,523) | 76,456,779 |
| 46 | | | | | |
| 47 | | | | | |

| | A | T | U | V | W | X | Y |
|---|---|---|---|---|---|---|---|
| 1 | **Public Service Company Of New Mexico** | | | | | | |
| 2 | **Schedule B-7 Nuclear Fuel in Process** | | | | | | |
| 3 | Lead Sheet | | | | | | |
| 4 | **Note: Base period data is historical information from the Company's Books and Records.** | | | | | | |
| 5 | This schedule is sponsored by PNM Witness Gutierrez | | | | | | |
| 6 | **Description** | **Linkage Beginning Balance Jun-26** | **Change Jul-26** | **Change Aug-26** | **Change Sept-26** | **Change Oct-26** | **Change Nov-26** |
| 7 | | | | | | | |
| 8 | Fuel in Process | | | | | | |
| 9 | 120.1 Palo Verde Unit 1 | 260,653 | 34,077 | 33,990 | 72,101 | (2,672,761) | 18,837 |
| 10 | 120.1 Palo Verde Unit 2 | 784,097 | 14,553 | 11,674 | 11,369 | 6,597 | 11,602 |
| 11 | 120.1 Palo Verde Unit 3 | 898,048 | 29,863 | 19,766 | 712,470 | 2,820,544 | 45,735 |
| 12 | 120.1 Palo Verde Common | 44,884,504 | 1,535,033 | 254,335 | 1,177,134 | 558,083 | 264,472 |
| 13 | Total 120.1 | 46,827,302 | 1,613,526 | 319,766 | 1,973,074 | 712,462 | 340,646 |
| 14 | | | | | | | |
| 15 | Fuel Stock | | | | | | |
| 16 | 120.2 Palo Verde Unit 1 | 402,102 | - | - | - | 2,722,036 | (2,722,036) |
| 17 | 120.2 Palo Verde Unit 2 | 801,471 | - | - | - | - | - |
| 18 | 120.2 Palo Verde Unit 3 | 1,134,099 | - | - | - | - | - |
| 19 | 120.2 Palo Verde Common | - | | | | | |
| 20 | Total 120.2 | 2,337,672 | - | - | - | 2,722,036 | (2,722,036) |
| 21 | | | | | | | |
| 22 | Fuel in Core | | | | | | |
| 23 | 120.3 Palo Verde Unit 1 | 6,510,965 | - | - | - | (3,123,822) | 2,722,036 |
| 24 | 120.3 Palo Verde Unit 2 | 23,684,661 | - | - | - | - | - |
| 25 | 120.3 Palo Verde Unit 3 | 26,403,307 | - | - | - | - | - |
| 26 | Total 120.3 | 56,598,933 | - | - | - | (3,123,822) | 2,722,036 |
| 27 | | | | | | | |
| 28 | Spent Fuel | | | | | | |
| 29 | 120.4 Palo Verde Unit 1 | - | - | - | - | 3,123,822 | (3,123,822) |
| 30 | 120.4 Palo Verde Unit 2 | 813,665 | - | - | - | - | - |
| 31 | 120.4 Palo Verde Unit 3 | 893,079 | - | - | - | - | - |
| 32 | Total 120.4 | 1,706,744 | - | - | - | 3,123,822 | (3,123,822) |
| 33 | | | | | | | |
| 34 | Fuel Amortization **(Note 1)** | | | | | | |
| 35 | 120.5 Palo Verde Unit 1 | (3,094,089) | (111,417) | (111,417) | (73,658) | (26,922) | (62,948) |
| 36 | 120.5 Palo Verde Unit 2 | (12,446,321) | (627,683) | (627,683) | (484,548) | (627,683) | (623,691) |
| 37 | 120.5 Palo Verde Unit 3 | (15,473,461) | (698,340) | (698,340) | (530,754) | (698,340) | (693,666) |
| 38 | Total 120.5 | (31,013,872) | (1,437,440) | (1,437,440) | (1,088,960) | (1,352,946) | (1,380,305) |
| 39 | | | | | | | |
| 40 | Total | 76,456,779 | 176,085 | (1,117,675) | 884,113 | 2,081,553 | (4,163,481) |
| 41 | **Summary of Activity** | | | | | | |
| 42 | Palo Verde | 76,456,779 | 176,085 | (1,117,675) | 884,113 | 2,081,553 | (4,163,481) |
| 43 | | | | | | | |
| 44 | **Balances** | | | | | | |
| 45 | Palo Verde Balance | 76,456,779 | 76,632,864 | 75,515,189 | 76,399,302 | 78,480,855 | 74,317,374 |
| 46 | | | | | | | |
| 47 | | | | | | | |

| | A | Z | AA | AB | AC | AD | AE |
|---|---|---|---|---|---|---|---|
| 1 | **Public Service Company Of New Mexico** | | | | | | |
| 2 | **Schedule B-7 Nuclear Fuel in Process** | | | | | | |
| 3 | Lead Sheet | | | | | | |
| 4 | **Note: Base period data is historical information from the Company's Books and Records.** | | | | | | |
| 5 | This schedule is sponsored by PNM Witness Gutierrez | | | | | | |
| 6 | **Description** | **Change Dec-26** | **Change Jan-27** | **Change Feb-27** | **Change Mar-27** | **Change Apr-27** | **Change May-27** |
| 7 | | | | | | | |
| 8 | Fuel in Process | | | | | | |
| 9 | 120.1 Palo Verde Unit 1 | 18,052 | 31,172 | 17,753 | 17,846 | 17,939 | 18,033 |
| 10 | 120.1 Palo Verde Unit 2 | 13,542 | 51,704 | 4,852 | 4,877 | 4,096,784 | 22,581 |
| 11 | 120.1 Palo Verde Unit 3 | 29,653 | 782,189 | 523,356 | 57,100 | (11,937,920) | (12,568) |
| 12 | 120.1 Palo Verde Common | 265,821 | 272,448 | 818,782 | 2,302,553 | 1,493,331 | 301,913 |
| 13 | Total 120.1 | 327,068 | 1,137,513 | 1,364,742 | 2,382,376 | (6,329,865) | 329,960 |
| 14 | | | | | | | |
| 15 | Fuel Stock | | | | | | |
| 16 | 120.2 Palo Verde Unit 1 | - | - | - | - | - | - |
| 17 | 120.2 Palo Verde Unit 2 | - | - | - | - | - | - |
| 18 | 120.2 Palo Verde Unit 3 | - | - | - | - | 11,987,546 | (11,987,546) |
| 19 | 120.2 Palo Verde Common | | | | | | |
| 20 | Total 120.2 | - | - | - | - | 11,987,546 | (11,987,546) |
| 21 | | | | | | | |
| 22 | Fuel in Core | | | | | | |
| 23 | 120.3 Palo Verde Unit 1 | - | - | - | - | - | - |
| 24 | 120.3 Palo Verde Unit 2 | - | - | - | - | - | - |
| 25 | 120.3 Palo Verde Unit 3 | - | - | - | - | (11,120,381) | 11,987,546 |
| 26 | Total 120.3 | - | - | - | - | (11,120,381) | 11,987,546 |
| 27 | | | | | | | |
| 28 | Spent Fuel | | | | | | |
| 29 | 120.4 Palo Verde Unit 1 | - | - | - | - | - | - |
| 30 | 120.4 Palo Verde Unit 2 | - | - | - | - | - | - |
| 31 | 120.4 Palo Verde Unit 3 | - | - | - | - | 11,120,381 | (11,120,381) |
| 32 | Total 120.4 | - | - | - | - | 11,120,381 | (11,120,381) |
| 33 | | | | | | | |
| 34 | Fuel Amortization **(Note 1)** | | | | | | |
| 35 | 120.5 Palo Verde Unit 1 | (152,678) | (189,385) | (178,226) | (144,437) | (185,333) | (189,385) |
| 36 | 120.5 Palo Verde Unit 2 | (488,541) | (678,303) | (665,361) | (494,182) | (673,989) | (678,303) |
| 37 | 120.5 Palo Verde Unit 3 | (535,428) | (698,340) | (684,318) | (498,483) | (561,917) | (743,732) |
| 38 | Total 120.5 | (1,176,647) | (1,566,028) | (1,527,905) | (1,137,102) | (1,421,239) | (1,611,420) |
| 39 | | | | | | | |
| 40 | Total | (849,578) | (428,515) | (163,163) | 1,245,274 | 4,236,442 | (12,401,841) |
| 41 | **Summary of Activity** | | | | | | |
| 42 | Palo Verde | (849,578) | (428,515) | (163,163) | 1,245,274 | 4,236,442 | (12,401,841) |
| 43 | | | | | | | |
| 44 | **Balances** | | | | | | |
| 45 | Palo Verde Balance | 73,467,796 | 73,039,281 | 72,876,119 | 74,121,393 | 78,357,834 | 65,955,993 |
| 46 | | | | | | | |
| 47 | | | | | | | |

| | A | AF | AG | AH | AI | AJ | AK | AL |
|---|---|---|---|---|---|---|---|---|
| 1 | **Public Service Company Of New Mexico** | | | | | | | |
| 2 | **Schedule B-7 Nuclear Fuel in Process** | | | | | | | |
| 3 | Lead Sheet | | | | | | | |
| 4 | **Note: Base period data is historical information from the Company's Books and Records.** | | | | | | | |
| 5 | This schedule is sponsored by PNM Witness Gutierrez | | | | | | | |
| 6 | **Description** | **Change Jun-27** | **Change Jul-27** | **Change Aug-27** | **Change Sep-27** | **Linkage Ending Balance** | **Test Period Beginning Balance Sept 2027** | **Change Oct-27** |
| 7 | | | | | | | | |
| 8 | Fuel in Process | | | | | | | |
| 9 | 120.1 Palo Verde Unit 1 | 18,128 | 18,223 | 18,318 | 185,831 | (1,891,809) | (1,891,809) | 749,565 |
| 10 | 120.1 Palo Verde Unit 2 | 1,026,137 | 28,072 | 28,219 | 28,367 | 6,145,026 | 6,145,026 | (10,420,489) |
| 11 | 120.1 Palo Verde Unit 3 | (7,520) | (12,264) | (15,601) | (13,739) | (6,080,887) | (6,080,887) | (17,493) |
| 12 | 120.1 Palo Verde Common | 477,250 | 307,749 | 318,802 | 1,928,992 | 57,161,203 | 57,161,203 | 507,693 |
| 13 | Total 120.1 | 1,513,995 | 341,780 | 349,738 | 2,129,450 | 55,333,533 | 55,333,533 | (9,180,724) |
| 14 | | | | | | | | |
| 15 | Fuel Stock | | | | | | | |
| 16 | 120.2 Palo Verde Unit 1 | - | - | - | - | 402,102 | 402,102 | - |
| 17 | 120.2 Palo Verde Unit 2 | - | - | - | - | 801,471 | 801,471 | 10,449,004 |
| 18 | 120.2 Palo Verde Unit 3 | - | - | - | - | 1,134,099 | 1,134,099 | - |
| 19 | 120.2 Palo Verde Common | | | | | - | - | |
| 20 | Total 120.2 | - | - | - | - | 2,337,672 | 2,337,672 | 10,449,004 |
| 21 | | | | | | | | |
| 22 | Fuel in Core | | | | | | | |
| 23 | 120.3 Palo Verde Unit 1 | - | - | - | - | 6,109,179 | 6,109,179 | - |
| 24 | 120.3 Palo Verde Unit 2 | - | - | - | - | 23,684,661 | 23,684,661 | (10,033,284) |
| 25 | 120.3 Palo Verde Unit 3 | - | - | - | - | 27,270,472 | 27,270,472 | - |
| 26 | Total 120.3 | - | - | - | - | 57,064,312 | 57,064,312 | (10,033,284) |
| 27 | | | | | | | | |
| 28 | Spent Fuel | | | | | | | |
| 29 | 120.4 Palo Verde Unit 1 | - | - | - | - | - | - | - |
| 30 | 120.4 Palo Verde Unit 2 | - | - | - | - | 813,665 | 813,665 | 10,033,284 |
| 31 | 120.4 Palo Verde Unit 3 | - | - | - | - | 893,079 | 893,079 | - |
| 32 | Total 120.4 | - | - | - | - | 1,706,744 | 1,706,744 | 10,033,284 |
| 33 | | | | | | | | |
| 34 | Fuel Amortization **(Note 1)** | | | | | | | |
| 35 | 120.5 Palo Verde Unit 1 | (140,385) | (189,385) | (189,385) | (140,385) | (5,179,435) | (5,179,435) | (189,385) |
| 36 | 120.5 Palo Verde Unit 2 | (489,868) | (678,303) | (678,303) | (488,648) | (21,451,412) | (21,451,412) | (548,172) |
| 37 | 120.5 Palo Verde Unit 3 | (623,616) | (839,777) | (839,777) | (623,616) | (25,441,905) | (25,441,905) | (839,777) |
| 38 | Total 120.5 | (1,253,869) | (1,707,465) | (1,707,465) | (1,252,649) | (52,072,752) | (52,072,752) | (1,577,334) |
| 39 | | | | | | | | |
| 40 | Total | 260,126 | (1,365,685) | (1,357,727) | 876,801 | 64,369,508 | 64,369,508 | (309,054) |
| 41 | **Summary of Activity** | | | | | | | |
| 42 | Palo Verde | 260,126 | (1,365,685) | (1,357,727) | 876,801 | 64,369,508 | 64,369,508 | (309,054) |
| 43 | | | | | | | | |
| 44 | **Balances** | | | | | | | |
| 45 | Palo Verde Balance | 66,216,119 | 64,850,434 | 63,011,782 | 63,888,583 | 64,369,508 | 64,369,508 | 63,579,529 |
| 46 | | | | | | | | |
| 47 | | | | | | | | |

| | A | AM | AN | AO | AP | AQ | AR |
|---|---|---|---|---|---|---|---|
| 1 | **Public Service Company Of New Mexico** | | | | | | |
| 2 | **Schedule B-7 Nuclear Fuel in Process** | | | | | | |
| 3 | Lead Sheet | | | | | | |
| 4 | **Note: Base period data is historical information from the Company's Books and Records.** | | | | | | |
| 5 | This schedule is sponsored by PNM Witness Gutierrez | | | | | | |
| 6 | **Description** | **Change Nov-27** | **Change Dec-27** | **Change Jan-28** | **Change Feb-28** | **Change Mar-28** | **Change Apr-28** |
| 7 | | | | | | | |
| 8 | Fuel in Process | | | | | | |
| 9 | 120.1 Palo Verde Unit 1 | 23,311 | 23,433 | 199,794 | 144,501 | 63,152 | (3,048,773) |
| 10 | 120.1 Palo Verde Unit 2 | (26,041) | (26,178) | 535,864 | (17,654) | (17,987) | (21,374) |
| 11 | 120.1 Palo Verde Unit 3 | (21,675) | (21,380) | 728,194 | 731,711 | (22,904) | (27,022) |
| 12 | 120.1 Palo Verde Common | 311,052 | 1,276,314 | 344,244 | 3,590,012 | 3,815,360 | 1,913,465 |
| 13 | Total 120.1 | 286,646 | 1,252,190 | 1,808,096 | 4,448,570 | 3,837,620 | (1,183,703) |
| 14 | | | | | | | |
| 15 | Fuel Stock | | | | | | |
| 16 | 120.2 Palo Verde Unit 1 | - | - | - | - | - | 3,107,043 |
| 17 | 120.2 Palo Verde Unit 2 | (10,449,004) | - | - | - | - | - |
| 18 | 120.2 Palo Verde Unit 3 | - | - | - | - | - | - |
| 19 | 120.2 Palo Verde Common | | | | | | |
| 20 | Total 120.2 | (10,449,004) | - | - | - | - | 3,107,043 |
| 21 | | | | | | | |
| 22 | Fuel in Core | | | | | | |
| 23 | 120.3 Palo Verde Unit 1 | - | - | - | - | - | (2,499,452) |
| 24 | 120.3 Palo Verde Unit 2 | 10,449,004 | - | - | - | - | - |
| 25 | 120.3 Palo Verde Unit 3 | - | - | - | - | - | - |
| 26 | Total 120.3 | 10,449,004 | - | - | - | - | (2,499,452) |
| 27 | | | | | | | |
| 28 | Spent Fuel | | | | | | |
| 29 | 120.4 Palo Verde Unit 1 | - | - | - | - | - | 2,499,452 |
| 30 | 120.4 Palo Verde Unit 2 | (10,033,284) | - | - | - | - | - |
| 31 | 120.4 Palo Verde Unit 3 | - | - | - | - | - | - |
| 32 | Total 120.4 | (10,033,284) | - | - | - | - | 2,499,452 |
| 33 | | | | | | | |
| 34 | Fuel Amortization **(Note 1)** | | | | | | |
| 35 | 120.5 Palo Verde Unit 1 | (185,333) | (144,437) | (189,385) | (179,280) | (159,848) | - |
| 36 | 120.5 Palo Verde Unit 2 | (518,581) | (569,955) | (754,076) | (715,447) | (630,438) | (739,762) |
| 37 | 120.5 Palo Verde Unit 3 | (823,103) | (640,290) | (839,777) | (795,430) | (708,070) | (823,103) |
| 38 | Total 120.5 | (1,527,017) | (1,354,682) | (1,783,238) | (1,690,157) | (1,498,356) | (1,562,865) |
| 39 | | | | | | | |
| 40 | Total | (11,273,655) | (102,492) | 24,858 | 2,758,413 | 2,339,264 | 360,475 |
| 41 | **Summary of Activity** | | | | | | |
| 42 | Palo Verde | (11,273,655) | (102,492) | 24,858 | 2,758,413 | 2,339,264 | 360,475 |
| 43 | | | | | | | |
| 44 | **Balances** | | | | | | |
| 45 | Palo Verde Balance | 52,305,874 | 52,203,383 | 52,228,241 | 54,986,654 | 57,325,918 | 57,686,393 |
| 46 | | | | | | | |
| 47 | | | | | | | |

| | A | AS | AT | AU | AV | AW | AX | AY | AZ |
|---|---|---|---|---|---|---|---|---|---|
| 1 | **Public Service Company Of New Mexico** | | | | | | | | |
| 2 | **Schedule B-7 Nuclear Fuel in Process** | | | | | | | | |
| 3 | Lead Sheet | | | | | | | | |
| 4 | **Note: Base period data is historical information from the Company's Books and Records.** | | | | | | | | |
| 5 | This schedule is sponsored by PNM Witness Gutierrez | | | | | | | | |
| 6 | **Description** | **Change May-28** | **Change Jun-28** | **Change Jul-28** | **Change Aug-28** | **Change Sep-28** | **Test Period Ending Balance Sep 2028** | **13-Mo Average Adjustments** | **Adjusted Test Period Ending Balance** |
| 7 | | | | | | | | | |
| 8 | Fuel in Process | | | | | | | | |
| 9 | 120.1 Palo Verde Unit 1 | 11,806 | 11,246 | 12,958 | 12,537 | 12,549 | (3,675,728) | 1,381,584 | (2,294,144) |
| 10 | 120.1 Palo Verde Unit 2 | (18,083) | (16,880) | (14,855) | (18,683) | (18,847) | (3,936,183) | 740,791 | (3,195,392) |
| 11 | 120.1 Palo Verde Unit 3 | 747,518 | 523,410 | (8,948) | (5,816) | 77,482 | (3,397,809) | (1,352,842) | (4,750,651) |
| 12 | 120.1 Palo Verde Common | 398,583 | 719,483 | 404,870 | 407,147 | 1,957,105 | 72,806,531 | (7,865,290) | 64,941,241 |
| 13 | Total 120.1 | 1,139,823 | 1,237,259 | 394,025 | 395,185 | 2,028,290 | 61,796,811 | (7,095,757) | 54,701,053 |
| 14 | | | | | | | | | |
| 15 | Fuel Stock | | | | | | | | |
| 16 | 120.2 Palo Verde Unit 1 | (3,107,043) | - | - | - | - | 402,102 | 239,003 | 641,105 |
| 17 | 120.2 Palo Verde Unit 2 | - | - | - | - | - | 801,471 | 803,770 | 1,605,240 |
| 18 | 120.2 Palo Verde Unit 3 | - | - | - | - | - | 1,134,099 | - | 1,134,099 |
| 19 | 120.2 Palo Verde Common | | | | | | - | - | - |
| 20 | Total 120.2 | (3,107,043) | - | - | - | - | 2,337,672 | 1,042,773 | 3,380,444 |
| 21 | | | | | | | | | |
| 22 | Fuel in Core | | | | | | | | |
| 23 | 120.3 Palo Verde Unit 1 | 3,107,043 | - | - | - | - | 6,716,770 | (566,168) | 6,150,602 |
| 24 | 120.3 Palo Verde Unit 2 | - | - | - | - | - | 24,100,381 | (835,748) | 23,264,633 |
| 25 | 120.3 Palo Verde Unit 3 | - | - | - | - | - | 27,270,472 | - | 27,270,472 |
| 26 | Total 120.3 | 3,107,043 | - | - | - | - | 58,087,623 | (1,401,916) | 56,685,707 |
| 27 | | | | | | | | | |
| 28 | Spent Fuel | | | | | | | | |
| 29 | 120.4 Palo Verde Unit 1 | (2,499,452) | - | - | - | - | - | 192,266 | 192,266 |
| 30 | 120.4 Palo Verde Unit 2 | - | - | - | - | - | 813,665 | 771,791 | 1,585,456 |
| 31 | 120.4 Palo Verde Unit 3 | - | - | - | - | - | 893,079 | - | 893,079 |
| 32 | Total 120.4 | (2,499,452) | - | - | - | - | 1,706,744 | 964,057 | 2,670,801 |
| 33 | | | | | | | | | |
| 34 | Fuel Amortization **(Note 1)** | | | | | | | | |
| 35 | 120.5 Palo Verde Unit 1 | (187,035) | (173,376) | (212,808) | (212,808) | (173,376) | (7,186,506) | 1,016,349 | (6,170,158) |
| 36 | 120.5 Palo Verde Unit 2 | (754,076) | (607,124) | (754,076) | (754,076) | (607,124) | (29,404,319) | 4,112,885 | (25,291,434) |
| 37 | 120.5 Palo Verde Unit 3 | (839,777) | (679,396) | (839,777) | (839,777) | (678,367) | (34,788,549) | 4,643,212 | (30,145,337) |
| 38 | Total 120.5 | (1,780,888) | (1,459,896) | (1,806,661) | (1,806,661) | (1,458,867) | (71,379,374) | 9,772,446 | (61,606,929) |
| 39 | | | | | | | | | |
| 40 | Total | (3,140,517) | (222,637) | (1,412,636) | (1,411,476) | 569,423 | 52,549,475 | 3,281,602 | 55,831,077 |
| 41 | **Summary of Activity** | | | | | | | | |
| 42 | Palo Verde | (3,140,517) | (222,637) | (1,412,636) | (1,411,476) | 569,423 | 52,549,475 | 3,281,602 | 55,831,077 |
| 43 | | | | | | | | | |
| 44 | **Balances** | | | | | | | | |
| 45 | Palo Verde Balance | 54,545,876 | 54,323,239 | 52,910,603 | 51,499,127 | 52,068,549 | 52,549,475 | 3,281,602 | 55,831,077 |
| 46 | | | | | | | | | |
| 47 | | | | | | | | | |

| | A | B | C |
|---|---|---|---|
| 1 | **Public Service Company Of New Mexico** | | |
| 2 | **Schedule B-7 Notes** | | |
| 3 | Lead Sheet | | |
| 4 | This schedule is sponsored by PNM Witness Gutierrez | | |
| 5 | Note 1: PNM forecasts the amortization of nuclear fuel as nuclear fuel expense, based on AURORA projections. See PNM Exhibit RNG-4 WP Fuel-6 for assumptions on nuclear fuel amortization. | | |
| 6 | | | |
| 7 | **General Note**: The forecasted activity in nuclear fuel inventory for the Test Period and Linkage data is based on projections provided by APS (operator of Palo Verde) and reflect PNM's share. Please refer to the testimony of PNM Witness Wesley Gray for discussion of nuclear fuel activity. Anticipated use of nuclear fuel based on APS operational outage schedules. | | |
| 8 | | | |
| 9 | | | |
| 10 | | | |

Accumulated provision for depreciation and amortization

# PNM C Series Schedules

Schedule C-1: Accumulated provision for depreciation and amortization by functional classification and detailed plant account

Schedule C-2: Depreciation rate study

Schedule C-3: Depreciation and amortization methods

# PNM Schedule C-1

Accumulated provision for depreciation and amortization by functional classification and detailed plant account

| | A | B | C | D | E | F | G | H |
|---|---|---|---|---|---|---|---|---|
| 1 | **Public Service Company of New Mexico** | | | | | | | |
| 2 | **Schedule C-1** | | | | | | | |
| 3 | **Accumulated Provision for Depreciation and Amortization by Functional Classification** | | | | | | | |
| 4 | **Base Period Ending 6/30/2026** | | | | | | | |
| 5 | **Test Period Ending 9/30/2028** | | | | | | | |
| 6 | Link to WP Plant Lead Sheet | | | | | | | |
| 7 | **Base Period data is historical Information from the Company's Books and Records.** | | | | | | | |
| 8 | This schedule is sponsored by PNM Witness Gutierrez | | | | | | | |
| 9 | | | | | | | | |
| 10 | **Location** | **Location Number Note 2** | **FERC** | **Loc/FERC** | **FERC Description** | **Base Period Beginning Balance 7/1/2025** | **Depreciation** | **Retirements** |
| 11 | | | | | | | | |
| 12 | **Production Plant** | | | | | | | |
| 13 | **Steam Production** | | | | | | | |
| 56 | **All - Steam** | | | | | | | |
| 57 | | | 310 | | Land and Land Rights | - | - | - |
| 58 | | | 310.1 | | Land Right of Way | 17,794 | 468 | - |
| 59 | | | 311 | | Structures & Improvements | 8,200,439 | 721,814 | (21,792) |
| 60 | | | 312 | | Boiler Plant Equipment | 88,517,666 | 6,673,698 | (1,265,607) |
| 61 | | | 314 | | Turbogenerator Units | 34,914,914 | 2,709,978 | (114,100) |
| 62 | | | 315 | | Accessory Electric Equipment | 9,726,119 | 691,917 | (234,845) |
| 63 | | | 315.01 | | Computer Hardware | - | - | - |
| 64 | | | 315.02 | | Computer Software | 333,186 | 275,724 | - |
| 65 | | | 315.03 | | Communication Equipment | 170,196 | 22,547 | - |
| 66 | | | 316 | | Misc Power Plant Equipment | 5,248,165 | 1,057,164 | (531,239) |
| 67 | | | 317 | | Asset Retirement Costs - Steam | 3,671,960 | 106,713 | - |
| 68 | **Total Steam Production Accumulated Reserve** | | | | | 150,800,440 | 12,260,022 | (2,167,582) |
| 69 | | | | | | | | |
| 70 | | | | | | | | |
| 71 | **Nuclear Production** | | | | | | | |
| 129 | **All - Nuclear** | | | | | | | |
| 130 | | | 320 | | Land and Land Rights | 0 | - | - |
| 131 | | | 320.1 | | Land - Right of Way | 29,265 | 668 | - |
| 132 | | | 321 | | Structures and Improvements | 108,615,871 | 4,475,377 | (1,181,645) |
| 133 | | | 322 | | Reactor Plant Equipment | 168,121,098 | 7,753,988 | (1,060,055) |
| 134 | | | 323 | | Turbogenerator Units | 59,946,426 | 2,744,308 | (888,048) |
| 135 | | | 324 | | Accessory Electric Equipment | 42,259,258 | 1,008,219 | (102,248) |
| 136 | | | 324.01 | | Computer Hardware | - | - | - |
| 137 | | | 324.02 | | Computer Software | 2,485,541 | 1,964,072 | (974,957) |
| 138 | | | 324.03 | | Communication Equipment | 208,733 | 28,828 | (43,565) |
| 139 | | | 325 | | Misc Power Plant Equipment | 36,540,897 | 1,832,971 | (188,782) |
| 140 | | | 326 | | Asset Retirement Costs Nuclear Prod Plant | 2,966,848 | 134,219 | - |
| 141 | **Total Nuclear Production Gross Accumulated Reserve** | | | | | 421,173,938 | 19,942,648 | (4,439,300) |
| 142 | | | | | | | | |
| 143 | | | | | | | | |

| | A | B | C | D | E | F | G | H |
|---|---|---|---|---|---|---|---|---|
| 1 | **Public Service Company of New Mexico** | | | | | | | |
| 2 | **Schedule C-1** | | | | | | | |
| 3 | **Accumulated Provision for Depreciation and Amortization by Functional Classification** | | | | | | | |
| 4 | **Base Period Ending 6/30/2026** | | | | | | | |
| 5 | **Test Period Ending 9/30/2028** | | | | | | | |
| 6 | Link to WP Plant Lead Sheet | | | | | | | |
| 7 | **Base Period data is historical Information from the Company's Books and Records.** | | | | | | | |
| 8 | This schedule is sponsored by PNM Witness Gutierrez | | | | | | | |
| 9 | | | | | | | | |
| 10 | **Location** | **Location Number Note 2** | **FERC** | **Loc/FERC** | **FERC Description** | **Base Period Beginning Balance 7/1/2025** | **Depreciation** | **Retirements** |
| 144 | **Solar Production** | | | | | | | |
| 237 | **All - Solar** | | | | | | | |
| 238 | | | 338.01 | | Land & Land Rights | - | - | - |
| 239 | | | 338.02 | | Structures and Improvements | 103,505 | 9,133 | - |
| 240 | | | 338.04 | | Solar Panels | 98,717,428 | 9,265,030 | - |
| 241 | | | 338.05 | | Collector System | 1,794,772 | 286,790 | - |
| 242 | | | 338.07 | | Solar Inverters | - | - | - |
| 243 | | | 338.08 | | Other Accessory Electrical Equipment | 10,733,640 | 1,141,531 | - |
| 244 | | | 338.09 | | Computer Hardware | 1,725 | 10,352 | - |
| 245 | | | 338.10 | | Computer Software | - | - | - |
| 246 | | | 338.11 | | Communication Equipment | 129,696 | 72,579 | - |
| 247 | | | 338.12 | | Misc. Power Plant Equipment | 1,689,110 | 137,583 | - |
| 248 | **Total Solar Production Gross Accumulated Reserve** | | | | | 113,169,876 | 10,922,997 | - |
| 249 | | | | | | | | |
| 250 | **Other Production** | | | | | | | |
| 251 | | | | | | | | |
| 252 | **Other Production - Gas:** | | | | | | | |
| 339 | **All - Gas** | | 340 | | Land and Land Rights | - | - | - |
| 340 | | | 340.1 | | Land - Right of Way | 679,071 | 70,625 | - |
| 341 | | | 341 | | Structures and Improvements | 40,487,361 | 2,939,782 | (1,227,246) |
| 342 | | | 342 | | Fuel Holders, Producers, Accessories | 53,831,009 | 3,849,989 | (335,074) |
| 343 | | | 343 | | Prime Movers | - | - | - |
| 344 | | | 344 | | Generators | 91,730,025 | 8,929,313 | (4,750,626) |
| 345 | | | 345 | | Accessory Electric Equipment | 7,250,320 | 1,185,610 | (106,148) |
| 346 | | | 345.01 | | Computer Hardware | 38,621 | - | - |
| 347 | | | 345.02 | | Computer Software | 38,731 | 5,952 | - |
| 348 | | | 345.03 | | Communication Equipment | 3,037 | 2,591 | - |
| 349 | | | 346 | | Misc Power Plant Equipment | 10,585,386 | 1,508,548 | (1,211,394) |
| 350 | | | 347 | | Asset Retirement Costs - Other Production | 952,080 | 222,304 | - |
| 351 | **Total Other Production Plant - Gas** | | | | | 205,595,642 | 18,714,714 | (7,630,488) |
| 352 | | | | | | | | |
| 353 | | | | | | | | |
| 354 | **Total Other Production Accumulated Reserve** | | | | | 205,595,642 | 18,714,714 | (7,630,488) |
| 355 | | | | | | | | |
| 356 | **Total Accumulated Reserve Production** | | | | | 890,739,895 | 61,840,381 | (14,237,370) |

| | A | B | C | D | E | F | G | H |
|---|---|---|---|---|---|---|---|---|
| 1 | **Public Service Company of New Mexico** | | | | | | | |
| 2 | **Schedule C-1** | | | | | | | |
| 3 | **Accumulated Provision for Depreciation and Amortization by Functional Classification** | | | | | | | |
| 4 | **Base Period Ending 6/30/2026** | | | | | | | |
| 5 | **Test Period Ending 9/30/2028** | | | | | | | |
| 6 | Link to WP Plant Lead Sheet | | | | | | | |
| 7 | **Base Period data is historical Information from the Company's Books and Records.** | | | | | | | |
| 8 | This schedule is sponsored by PNM Witness Gutierrez | | | | | | | |
| 9 | | | | | | | | |
| 10 | **Location** | **Location Number Note 2** | **FERC** | **Loc/FERC** | **FERC Description** | **Base Period Beginning Balance 7/1/2025** | **Depreciation** | **Retirements** |
| 357 | | | | | | | | |
| 358 | | | | | | | | |
| 359 | **Accumulated Reserve Battery Storage Plant** | | | | | | | |
| 386 | **All - Energy Storage** | | 387.01 | 387.01 | Land & Land Rights | - | - | - |
| 387 | | | 387.02 | 387.02 | Structures & Improvements | 5,170 | 20,679 | - |
| 388 | | | 387.03 | 387.03 | Energy Storage Equipment | 3,766,569 | 517,139 | - |
| 389 | | | 387.05 | 387.05 | Collector System | 37,370 | 149,863 | - |
| 390 | | | 387.06 | 387.06 | Generator Step-Up Transformers (GSU) | 13,259 | 53,183 | - |
| 391 | | | 387.07 | 387.07 | Inverters | - | - | - |
| 392 | | | 387.08 | 387.08 | Computer Hardware | - | - | - |
| 393 | | | 387.09 | 387.09 | Computer Software | 121,001 | 127,003 | - |
| 394 | | | 387.10 | 387.10 | Communication Equipment | 4,224 | 16,895 | - |
| 395 | | | 387.11 | 387.11 | Misc. Energy Storage Equipment | 1,626,586 | 151,323 | - |
| 396 | | | 387.12 | 387.12 | Asset Retirement Costs for Energy Storage | - | - | - |
| 397 | **Total Accumulated Reserve Energy Storage Plant** | | | | | 5,574,178 | 1,036,086 | - |
| 398 | | | | | | | | |
| 399 | | | | | | | | |
| 400 | **Accumulated Reserve Transmission Plant** | | | | | | | |
| 453 | **All - Transmission** | | | | | | | |
| 454 | | | 350 | 350 | Land and Land Rights | 4,874,078 | 1,335,562 | - |
| 455 | | | 350.1 | 350.1 | Land - Right of Way | 25,366,156 | 506,177 | - |
| 456 | | | 351.01 | 351.01 | Computer Hardware | 3,527,775 | 3,905,795 | (2,900,627) |
| 457 | | | 351.02 | 351.02 | Computer Software | 3,611,485 | 1,667,933 | (604,441) |
| 458 | | | 351.03 | 351.03 | Communication Equipment | 13,942,898 | 3,117,999 | (666,755) |
| 459 | | | 352 | 352 | Structures and Improvements | 20,729,545 | 4,587,991 | (22,937) |
| 460 | | | 353 | 353 | Station Equipment | 212,621,745 | 26,249,243 | (10,713,322) |
| 461 | | | 353.1 | 353.1 | Station Equipment - Step-up Xfmr and Aux | 6,346,338 | 325,394 | - |
| 462 | | | 354 | 354 | Towers and Fixtures | 47,634,396 | 809,817 | (63,144) |
| 463 | | | 355 | 355 | Poles and Fixtures | 121,863,439 | 17,289,316 | (516,516) |
| 464 | | | 356 | 356 | Overhead Conductors and Devices | 96,174,023 | 5,714,482 | (277,259) |
| 465 | | | 357 | 357 | Underground Conduit | 2,350 | 3,525 | - |
| 466 | | | 359 | 359 | Roads and Trails | 2,927,553 | 143,706 | - |
| 467 | **Total Accumulated Reserve Transmission Plant** | | | | | 559,621,781 | 65,656,940 | (15,765,002) |
| 468 | | | | | | | | |

| | A | B | C | D | E | F | G | H |
|---|---|---|---|---|---|---|---|---|
| 1 | **Public Service Company of New Mexico** | | | | | | | |
| 2 | **Schedule C-1** | | | | | | | |
| 3 | **Accumulated Provision for Depreciation and Amortization by Functional Classification** | | | | | | | |
| 4 | **Base Period Ending 6/30/2026** | | | | | | | |
| 5 | **Test Period Ending 9/30/2028** | | | | | | | |
| 6 | Link to WP Plant Lead Sheet | | | | | | | |
| 7 | **Base Period data is historical Information from the Company's Books and Records.** | | | | | | | |
| 8 | This schedule is sponsored by PNM Witness Gutierrez | | | | | | | |
| 9 | | | | | | | | |
| 10 | **Location** | **Location Number Note 2** | **FERC** | **Loc/FERC** | **FERC Description** | **Base Period Beginning Balance 7/1/2025** | **Depreciation** | **Retirements** |
| 469 | | | | | | | | |
| 470 | | | | | | | | |
| 471 | **Accumulated Reserve Distribution Plant** | | | | | | | |
| 665 | **All - Distribution** | | | | | | | |
| 666 | | | 360 | | Land and Land Rights | 261,298 | - | - |
| 667 | | | 360.1 | | Land - Right of Way | 1,227,853 | 19,092 | - |
| 668 | | | 361 | | Structures and Improvements | 11,554,850 | 1,014,221 | (116,172) |
| 669 | | | 362 | | Station Equipment | 103,681,205 | 8,124,435 | (1,748,488) |
| 670 | | | 363.01 | | Computer Hardware | 1,129,284 | 1,030,083 | (284,060) |
| 671 | | | 363.02 | | Computer Software | 9,229,206 | 8,679,242 | (266,981) |
| 672 | | | 363.03 | | Communication Equipment | 6,387,198 | 1,150,426 | (456,203) |
| 673 | | | 364 | | Poles, Towers and Fixtures | 91,449,549 | 17,979,858 | (2,837,878) |
| 674 | | | 365 | | Overhead Conductors and Devices | 107,287,371 | 11,078,472 | (1,249,185) |
| 675 | | | 366 | | Underground Conduit | 72,546,887 | 3,577,347 | (703,448) |
| 676 | | | 367 | | Underground Conductors and Devices | 140,769,806 | 10,184,065 | (1,559,646) |
| 677 | | | 368 | | Line Transformers | 122,732,021 | 6,830,287 | (1,933,547) |
| 678 | | | 369 | | Services | 51,112,586 | 3,105,679 | (303,652) |
| 679 | | | 369.1 | | Services - Underground | 80,969,818 | 5,119,894 | (162,166) |
| 680 | | | 370 | | Meters | 12,102,847 | 3,143,061 | (1,243,637) |
| 681 | | | 370.4 | | Meters - Grid Mod | - | 2,633 | - |
| 682 | | | 371 | | Installations on Customers' Premises | 8,621,527 | - | - |
| 683 | | | 371.1 | | Leased Flood Lighting | 266,445 | - | - |
| 684 | | | 373 | | Street Lighting and Signal Systems | 12,912,468 | 845,058 | (335,278) |
| 685 | | | 374 | | Asset Retirement Costs - Distribution | 14,051 | 126 | (14,202) |
| 686 | **Total Accumulated Reserve Distribution Plant** | | | | | 834,256,268 | 81,883,979 | (13,214,544) |
| 687 | | | | | | | | |

| | A | B | C | D | E | F | G | H |
|---|---|---|---|---|---|---|---|---|
| 1 | **Public Service Company of New Mexico** | | | | | | | |
| 2 | **Schedule C-1** | | | | | | | |
| 3 | **Accumulated Provision for Depreciation and Amortization by Functional Classification** | | | | | | | |
| 4 | **Base Period Ending 6/30/2026** | | | | | | | |
| 5 | **Test Period Ending 9/30/2028** | | | | | | | |
| 6 | Link to WP Plant Lead Sheet | | | | | | | |
| 7 | **Base Period data is historical Information from the Company's Books and Records.** | | | | | | | |
| 8 | This schedule is sponsored by PNM Witness Gutierrez | | | | | | | |
| 9 | | | | | | | | |
| 10 | **Location** | **Location Number Note 2** | **FERC** | **Loc/FERC** | **FERC Description** | **Base Period Beginning Balance 7/1/2025** | **Depreciation** | **Retirements** |
| 688 | | | | | | | | |
| 689 | **Accumulated Reserve G&I Plant (303,389-399)** | | | | | | | |
| 719 | **Total General & Intangible Plant** | | | | | | | |
| 720 | | | 303 | 303 | Miscellaneous Intangible Plant | - | - | - |
| 721 | | | 389 | 389 | Land and Land Rights | - | - | - |
| 722 | | | 390 | 390 | Structures and Improvements | 29,669,890 | 1,394,633 | (976,725) |
| 723 | | | 390.1 | 390.1 | Bulk Power Office Building Remodeling | 5,713,965 | 11,330 | - |
| 724 | | | 390.2 | 390.2 | Bulk Power Office Building | 5,868,673 | - | (20,388) |
| 725 | | | 391 | 391 | Office Furniture and Equipment | 2,562,066 | 271,396 | (100,401) |
| 726 | | | 391.1 | 391.1 | Office Furniture and Equipment - PC System | - | - | - |
| 727 | | | 391.2 | 391.2 | Office Furniture and Equipment - PC's | - | - | - |
| 728 | | | 391.3 | 391.3 | Computer Hardware | - | - | - |
| 729 | | | 391.5 | 391.5 | Computer Hardware - Solar | - | - | - |
| 730 | | | 391.7 | 391.7 | Computer Hardware | - | - | - |
| 731 | | | 392 | 392 | Transportation Equipment - Light | 1,886,303 | 220,314 | (48,358) |
| 732 | | | 392.1 | 392.1 | Transportation Equipment - Heavy | 3,340,503 | 174,476 | - |
| 733 | | | 392.2 | 392.2 | Transportation Equipment - Trailers | 3,166,955 | 284,179 | (6,356) |
| 734 | | | 392.4 | 392.4 | Transportation Equipment - Leaseback | - | - | - |
| 735 | | | 393 | 393 | Stores Equipment | 77,755 | 4,045 | - |
| 736 | | | 394 | 394 | Tools, Shop & Garage Equipment | 8,545,212 | 947,274 | (580,842) |
| 737 | | | 395 | 395 | Laboratory Equipment | 99,247 | 21,244 | - |
| 738 | | | 396 | 396 | Power Operated Equipment | 3,927,607 | 182,100 | - |
| 739 | | | 397.01 | 397.01 | Computer Hardware | 1,344,613 | 295,938 | - |
| 740 | | | 397.02 | 397.02 | Computer Software | 15,902,189 | 6,026,954 | (888,327) |
| 741 | | | 397.03 | 397.03 | Communication Equipment | (0) | (0) | - |
| 742 | | | 398 | 398 | Miscellaneous Equipment | 1,094,430 | 67,811 | - |
| 743 | | | 399.1 | 399.1 | ARO General Plant-1 | 16,187 | 313 | - |
| 744 | **Total Accumulated Reserve G&I Plant - PNM** | | | | | 83,215,595 | 9,902,007 | (2,621,396) |
| 745 | | | | | | | | |
| 746 | **Total Electric Plant In Service** | | 101/106 | | | 2,373,407,717 | 220,319,393 | (45,838,312) |
| 747 | | | | | | | | |
| 748 | **Electric Plant Purchased** | | 102 | | | | | |
| 749 | | | | | | | | |
| 750 | **Electric Plant Acquisition Adjustment** | | | | Acq. Adj. - Palo Verde Unit 1&2 (Drexel) | | | |
| 751 | | | | | Acq. Adj. - Palo Verde Unit 2 (First Chicago) | - | - | - |
| 752 | | | | | Acq. Adj. - (EIP) | - | - | - |
| 753 | **Electric Plant Acquisition Adjustment** | | 114 | | | - | - | - |
| 754 | | | | | | | | |
| 755 | **Total Electric Plant** | | | | | 2,373,407,717 | 220,319,393 | (45,838,312) |
| 756 | | | | | | | | |

| | A | B | C | D | E | F | G | H |
|---|---|---|---|---|---|---|---|---|
| 1 | **Public Service Company of New Mexico** | | | | | | | |
| 2 | **Schedule C-1** | | | | | | | |
| 3 | **Accumulated Provision for Depreciation and Amortization by Functional Classification** | | | | | | | |
| 4 | **Base Period Ending 6/30/2026** | | | | | | | |
| 5 | **Test Period Ending 9/30/2028** | | | | | | | |
| 6 | Link to WP Plant Lead Sheet | | | | | | | |
| 7 | **Base Period data is historical Information from the Company's Books and Records.** | | | | | | | |
| 8 | This schedule is sponsored by PNM Witness Gutierrez | | | | | | | |
| 9 | | | | | | | | |
| 10 | **Location** | **Location Number Note 2** | **FERC** | **Loc/FERC** | **FERC Description** | **Base Period Beginning Balance 7/1/2025** | **Depreciation** | **Retirements** |
| 757 | | | | | | | | |
| 758 | **Corporate Unallocated** | 900 | 303 | 900303 | Miscellaneous Intangible Plant | - | - | - |
| 759 | | 900 | 389 | 900389 | Land and Land Rights | (66,097) | - | - |
| 760 | | 900 | 390 | 900390 | Structures and Improvements | 23,239,241 | 1,264,519 | (617,156) |
| 761 | | 900 | 390.1 | 900390.1 | Bulk Power Office Building Remodeling | - | - | - |
| 762 | | 900 | 390.2 | 900390.2 | Bulk Power Office Building | - | - | - |
| 763 | | 900 | 391 | 900391 | Office Furniture and Equipment | 271,630 | 47,407 | - |
| 764 | | 900 | 391.1 | 900391.1 | Office Furniture and Equipment - PC System | - | - | - |
| 765 | | 900 | 391.2 | 900391.2 | Office Furniture and Equipment - PC's | - | - | - |
| 766 | | 900 | 391.3 | 900391.3 | Computer Hardware | - | - | - |
| 767 | | 900 | 391.5 | 900391.5 | Computer Hardware - Solar | - | - | - |
| 768 | | 900 | 391.7 | 900391.7 | Computer Hardware | - | - | - |
| 769 | | 900 | 392 | 900392 | Transportation Equipment - Light | 124,904 | 17,207 | - |
| 770 | | 900 | 392.1 | 900392.1 | Transportation Equipment - Heavy | 11,638 | 2,539 | - |
| 771 | | 900 | 392.2 | 900392.2 | Transportation Equipment - Trailers | 6,575 | 343 | - |
| 772 | | 900 | 392.4 | 900392.4 | Transportation Equipment - Leaseback | - | - | - |
| 773 | | 900 | 393 | 900393 | Stores Equipment | - | - | - |
| 774 | | 900 | 394 | 900394 | Tools, Shop & Garage Equipment | 279,491 | 27,252 | - |
| 775 | | 900 | 395 | 900395 | Laboratory Equipment | - | - | - |
| 776 | | 900 | 396 | 900396 | Power Operated Equipment | 20,530 | 719 | - |
| 777 | | 900 | 397 | 900397 | Communication Equipment | - | - | - |
| 778 | | 900 | 397.01 | 900397.01 | Computer Hardware | 22,659,030 | 12,713,255 | (16,638,068) |
| 779 | | 900 | 397.02 | 900397.02 | Computer Software | 90,758,414 | 35,095,980 | (9,289,063) |
| 780 | | 900 | 397.03 | 900397.03 | Communication Equipment | 3,193,645 | 351,985 | - |
| 781 | | 900 | 397.2 | 900397.2 | Communication Equipment | - | - | - |
| 782 | | 900 | 397.3 | 900397.3 | Communication Equipment | - | - | - |
| 783 | | 900 | 398 | 900398 | Miscellaneous Equipment | - | - | - |
| 784 | | 900 | 399.1 | 900399.1 | ARO General Plant-1 | - | - | - |
| 785 | | | | | | | | |
| 786 | **Total Accumulated Reserve Corporate Plant** | | | | | 140,499,002 | 49,521,205 | (26,544,286) |
| 787 | | | | | | | | |
| 788 | **Total Electric Plant In Service - with corporate** | | 101/106 | | | 2,513,906,720 | 269,840,598 | (72,382,599) |
| 789 | | | | | | | | |
| 790 | **Electric Plant Purchased - with Corporate** | | 102 | | | | | |
| 791 | | | | | | | | |
| 792 | **Electric Plant Acq. Adj. - with Corporate** | | 114 | | | - | - | - |
| 793 | | | | | | | | |
| 794 | **Total Electric Plant - with Corporate** | | | | | 2,513,906,720 | 269,840,598 | (72,382,599) |

| | A | B | C | D | E | I | J | K |
|---|---|---|---|---|---|---|---|---|
| 1 | **Public Service Company of New Mexico** | | | | | | | |
| 2 | **Schedule C-1** | | | | | | | |
| 3 | **Accumulated Provision for Depreciation and Amortization by Functional Classification** | | | | | | | |
| 4 | **Base Period Ending 6/30/2026** | | | | | | | |
| 5 | **Test Period Ending 9/30/2028** | | | | | | | |
| 6 | Link to WP Plant Lead Sheet | | | | | | | |
| 7 | **Base Period data is historical Information from the Company's Books and Records.** | | | | | | | |
| 8 | This schedule is sponsored by PNM Witness Gutierrez | | | | | | | |
| 9 | | | | | | | | |
| 10 | **Location** | **Location Number Note 2** | **FERC** | **Loc/FERC** | **FERC Description** | **Removal Cost** | **Salvage** | **Other DR/CR** |
| 11 | | | | | | | | |
| 12 | **Production Plant** | | | | | | | |
| 13 | **Steam Production** | | | | | | | |
| 56 | **All - Steam** | | | | | | | |
| 57 | | | 310 | | Land and Land Rights | - | - | - |
| 58 | | | 310.1 | | Land Right of Way | - | - | - |
| 59 | | | 311 | | Structures & Improvements | (1,099,996) | - | - |
| 60 | | | 312 | | Boiler Plant Equipment | (530,641) | - | - |
| 61 | | | 314 | | Turbogenerator Units | (264,825) | - | - |
| 62 | | | 315 | | Accessory Electric Equipment | (655) | - | - |
| 63 | | | 315.01 | | Computer Hardware | - | - | - |
| 64 | | | 315.02 | | Computer Software | - | - | 187 |
| 65 | | | 315.03 | | Communication Equipment | - | - | - |
| 66 | | | 316 | | Misc Power Plant Equipment | (2,641) | - | - |
| 67 | | | 317 | | Asset Retirement Costs - Steam | - | - | - |
| 68 | **Total Steam Production Accumulated Reserve** | | | | | (1,898,759) | - | 187 |
| 69 | | | | | | | | |
| 70 | | | | | | | | |
| 71 | **Nuclear Production** | | | | | | | |
| 129 | **All - Nuclear** | | | | | | | |
| 130 | | | 320 | | Land and Land Rights | - | - | - |
| 131 | | | 320.1 | | Land - Right of Way | - | - | - |
| 132 | | | 321 | | Structures and Improvements | (716,540) | - | - |
| 133 | | | 322 | | Reactor Plant Equipment | (534,175) | - | - |
| 134 | | | 323 | | Turbogenerator Units | (1,060,947) | - | - |
| 135 | | | 324 | | Accessory Electric Equipment | 1,848 | - | - |
| 136 | | | 324.01 | | Computer Hardware | - | - | - |
| 137 | | | 324.02 | | Computer Software | - | - | - |
| 138 | | | 324.03 | | Communication Equipment | - | - | - |
| 139 | | | 325 | | Misc Power Plant Equipment | (54,038) | - | 4,281 |
| 140 | | | 326 | | Asset Retirement Costs Nuclear Prod Plant | - | - | - |
| 141 | **Total Nuclear Production Gross Accumulated Reserve** | | | | | (2,363,852) | - | 4,281 |
| 142 | | | | | | | | |
| 143 | | | | | | | | |

| | A | B | C | D | E | I | J | K |
|---|---|---|---|---|---|---|---|---|
| 1 | **Public Service Company of New Mexico** | | | | | | | |
| 2 | **Schedule C-1** | | | | | | | |
| 3 | **Accumulated Provision for Depreciation and Amortization by Functional Classification** | | | | | | | |
| 4 | **Base Period Ending 6/30/2026** | | | | | | | |
| 5 | **Test Period Ending 9/30/2028** | | | | | | | |
| 6 | Link to WP Plant Lead Sheet | | | | | | | |
| 7 | **Base Period data is historical Information from the Company's Books and Records.** | | | | | | | |
| 8 | This schedule is sponsored by PNM Witness Gutierrez | | | | | | | |
| 9 | | | | | | | | |
| 10 | **Location** | **Location Number Note 2** | **FERC** | **Loc/FERC** | **FERC Description** | **Removal Cost** | **Salvage** | **Other DR/CR** |
| 144 | **Solar Production** | | | | | | | |
| 237 | **All - Solar** | | | | | | | |
| 238 | | | 338.01 | | Land & Land Rights | - | - | - |
| 239 | | | 338.02 | | Structures and Improvements | - | - | - |
| 240 | | | 338.04 | | Solar Panels | - | - | - |
| 241 | | | 338.05 | | Collector System | - | - | - |
| 242 | | | 338.07 | | Solar Inverters | - | - | - |
| 243 | | | 338.08 | | Other Accessory Electrical Equipment | - | - | - |
| 244 | | | 338.09 | | Computer Hardware | - | - | - |
| 245 | | | 338.10 | | Computer Software | - | - | - |
| 246 | | | 338.11 | | Communication Equipment | - | - | - |
| 247 | | | 338.12 | | Misc. Power Plant Equipment | - | - | - |
| 248 | **Total Solar Production Gross Accumulated Reserve** | | | | | - | - | - |
| 249 | | | | | | | | |
| 250 | **Other Production** | | | | | | | |
| 251 | | | | | | | | |
| 252 | **Other Production - Gas:** | | | | | | | |
| 339 | **All - Gas** | | 340 | | Land and Land Rights | - | - | - |
| 340 | | | 340.1 | | Land - Right of Way | - | - | - |
| 341 | | | 341 | | Structures and Improvements | (61,110) | - | - |
| 342 | | | 342 | | Fuel Holders, Producers, Accessories | (123,688) | - | - |
| 343 | | | 343 | | Prime Movers | - | - | - |
| 344 | | | 344 | | Generators | (796,179) | - | - |
| 345 | | | 345 | | Accessory Electric Equipment | (26,962) | - | - |
| 346 | | | 345.01 | | Computer Hardware | - | - | - |
| 347 | | | 345.02 | | Computer Software | - | - | - |
| 348 | | | 345.03 | | Communication Equipment | - | - | (287) |
| 349 | | | 346 | | Misc Power Plant Equipment | (200,611) | - | - |
| 350 | | | 347 | | Asset Retirement Costs - Other Production | - | - | - |
| 351 | **Total Other Production Plant - Gas** | | | | | (1,208,550) | - | (287) |
| 352 | | | | | | | | |
| 353 | | | | | | | | |
| 354 | **Total Other Production Accumulated Reserve** | | | | | (1,208,550) | - | (287) |
| 355 | | | | | | | | |
| 356 | **Total Accumulated Reserve Production** | | | | | (5,471,160) | - | 4,180 |

| | A | B | C | D | E | I | J | K |
|---|---|---|---|---|---|---|---|---|
| 1 | **Public Service Company of New Mexico** | | | | | | | |
| 2 | **Schedule C-1** | | | | | | | |
| 3 | **Accumulated Provision for Depreciation and Amortization by Functional Classification** | | | | | | | |
| 4 | **Base Period Ending 6/30/2026** | | | | | | | |
| 5 | **Test Period Ending 9/30/2028** | | | | | | | |
| 6 | Link to WP Plant Lead Sheet | | | | | | | |
| 7 | **Base Period data is historical Information from the Company's Books and Records.** | | | | | | | |
| 8 | This schedule is sponsored by PNM Witness Gutierrez | | | | | | | |
| 9 | | | | | | | | |
| 10 | **Location** | **Location Number Note 2** | **FERC** | **Loc/FERC** | **FERC Description** | **Removal Cost** | **Salvage** | **Other DR/CR** |
| 357 | | | | | | | | |
| 358 | | | | | | | | |
| 359 | **Accumulated Reserve Battery Storage Plant** | | | | | | | |
| 386 | **All - Energy Storage** | | 387.01 | 387.01 | Land & Land Rights | - | - | - |
| 387 | | | 387.02 | 387.02 | Structures & Improvements | - | - | - |
| 388 | | | 387.03 | 387.03 | Energy Storage Equipment | - | - | - |
| 389 | | | 387.05 | 387.05 | Collector System | - | - | - |
| 390 | | | 387.06 | 387.06 | Generator Step-Up Transformers (GSU) | - | - | - |
| 391 | | | 387.07 | 387.07 | Inverters | - | - | - |
| 392 | | | 387.08 | 387.08 | Computer Hardware | - | - | - |
| 393 | | | 387.09 | 387.09 | Computer Software | - | - | - |
| 394 | | | 387.10 | 387.10 | Communication Equipment | - | - | - |
| 395 | | | 387.11 | 387.11 | Misc. Energy Storage Equipment | - | - | - |
| 396 | | | 387.12 | 387.12 | Asset Retirement Costs for Energy Storage | - | - | - |
| 397 | **Total Accumulated Reserve Energy Storage Plant** | | | | | - | - | - |
| 398 | | | | | | | | |
| 399 | | | | | | | | |
| 400 | **Accumulated Reserve Transmission Plant** | | | | | | | |
| 453 | **All - Transmission** | | | | | | | |
| 454 | | | 350 | 350 | Land and Land Rights | - | - | 42 |
| 455 | | | 350.1 | 350.1 | Land - Right of Way | - | - | - |
| 456 | | | 351.01 | 351.01 | Computer Hardware | (181) | - | 1,826 |
| 457 | | | 351.02 | 351.02 | Computer Software | - | - | - |
| 458 | | | 351.03 | 351.03 | Communication Equipment | (72,943) | - | (15,771) |
| 459 | | | 352 | 352 | Structures and Improvements | (290,205) | - | - |
| 460 | | | 353 | 353 | Station Equipment | (1,137,147) | 4,416,700 | (5,956) |
| 461 | | | 353.1 | 353.1 | Station Equipment - Step-up Xfmr and Aux | - | - | - |
| 462 | | | 354 | 354 | Towers and Fixtures | (1,823) | - | (303,128) |
| 463 | | | 355 | 355 | Poles and Fixtures | (520,889) | - | (81,746) |
| 464 | | | 356 | 356 | Overhead Conductors and Devices | (256,399) | - | 359,698 |
| 465 | | | 357 | 357 | Underground Conduit | - | - | - |
| 466 | | | 359 | 359 | Roads and Trails | - | - | - |
| 467 | **Total Accumulated Reserve Transmission Plant** | | | | | (2,279,587) | 4,416,700 | (45,034) |
| 468 | | | | | | | | |

| | A | B | C | D | E | I | J | K |
|---|---|---|---|---|---|---|---|---|
| 1 | **Public Service Company of New Mexico** | | | | | | | |
| 2 | **Schedule C-1** | | | | | | | |
| 3 | **Accumulated Provision for Depreciation and Amortization by Functional Classification** | | | | | | | |
| 4 | **Base Period Ending 6/30/2026** | | | | | | | |
| 5 | **Test Period Ending 9/30/2028** | | | | | | | |
| 6 | Link to WP Plant Lead Sheet | | | | | | | |
| 7 | **Base Period data is historical Information from the Company's Books and Records.** | | | | | | | |
| 8 | This schedule is sponsored by PNM Witness Gutierrez | | | | | | | |
| 9 | | | | | | | | |
| 10 | **Location** | **Location Number Note 2** | **FERC** | **Loc/FERC** | **FERC Description** | **Removal Cost** | **Salvage** | **Other DR/CR** |
| 469 | | | | | | | | |
| 470 | | | | | | | | |
| 471 | **Accumulated Reserve Distribution Plant** | | | | | | | |
| 665 | **All - Distribution** | | | | | | | |
| 666 | | | 360 | | Land and Land Rights | - | 162,102 | (167,696) |
| 667 | | | 360.1 | | Land - Right of Way | - | - | - |
| 668 | | | 361 | | Structures and Improvements | (63,821) | - | 0 |
| 669 | | | 362 | | Station Equipment | (1,221,575) | - | 31,590 |
| 670 | | | 363.01 | | Computer Hardware | (6,097) | - | 276 |
| 671 | | | 363.02 | | Computer Software | - | - | 573 |
| 672 | | | 363.03 | | Communication Equipment | (23,354) | - | (0) |
| 673 | | | 364 | | Poles, Towers and Fixtures | (8,307,090) | (7,731) | (139) |
| 674 | | | 365 | | Overhead Conductors and Devices | (2,476,266) | (4,296) | 66 |
| 675 | | | 366 | | Underground Conduit | (435,859) | - | (54) |
| 676 | | | 367 | | Underground Conductors and Devices | (1,353,198) | - | 128 |
| 677 | | | 368 | | Line Transformers | (906,312) | (53,175) | (575,484) |
| 678 | | | 369 | | Services | (682,410) | - | 822 |
| 679 | | | 369.1 | | Services - Underground | (396,925) | - | (822) |
| 680 | | | 370 | | Meters | (1,130,864) | - | - |
| 681 | | | 370.4 | | Meters - Grid Mod | - | - | - |
| 682 | | | 371 | | Installations on Customers' Premises | - | - | - |
| 683 | | | 371.1 | | Leased Flood Lighting | - | - | - |
| 684 | | | 373 | | Street Lighting and Signal Systems | (288,850) | - | - |
| 685 | | | 374 | | Asset Retirement Costs - Distribution | - | - | 25 |
| 686 | **Total Accumulated Reserve Distribution Plant** | | | | | (17,292,622) | 96,900 | (710,716) |
| 687 | | | | | | | | |

| | A | B | C | D | E | I | J | K |
|---|---|---|---|---|---|---|---|---|
| 1 | **Public Service Company of New Mexico** | | | | | | | |
| 2 | **Schedule C-1** | | | | | | | |
| 3 | **Accumulated Provision for Depreciation and Amortization by Functional Classification** | | | | | | | |
| 4 | **Base Period Ending 6/30/2026** | | | | | | | |
| 5 | **Test Period Ending 9/30/2028** | | | | | | | |
| 6 | Link to WP Plant Lead Sheet | | | | | | | |
| 7 | **Base Period data is historical Information from the Company's Books and Records.** | | | | | | | |
| 8 | This schedule is sponsored by PNM Witness Gutierrez | | | | | | | |
| 9 | | | | | | | | |
| 10 | **Location** | **Location Number Note 2** | **FERC** | **Loc/FERC** | **FERC Description** | **Removal Cost** | **Salvage** | **Other DR/CR** |
| 689 | **Accumulated Reserve G&I Plant (303,389-399)** | | | | | | | |
| 719 | **Total General & Intangible Plant** | | | | | | | |
| 720 | | | 303 | 303 | Miscellaneous Intangible Plant | - | - | - |
| 721 | | | 389 | 389 | Land and Land Rights | - | - | - |
| 722 | | | 390 | 390 | Structures and Improvements | (349,768) | - | - |
| 723 | | | 390.1 | 390.1 | Bulk Power Office Building Remodeling | - | - | - |
| 724 | | | 390.2 | 390.2 | Bulk Power Office Building | (2,160) | - | - |
| 725 | | | 391 | 391 | Office Furniture and Equipment | - | - | (276) |
| 726 | | | 391.1 | 391.1 | Office Furniture and Equipment - PC System | - | - | - |
| 727 | | | 391.2 | 391.2 | Office Furniture and Equipment - PC's | - | - | - |
| 728 | | | 391.3 | 391.3 | Computer Hardware | - | - | - |
| 729 | | | 391.5 | 391.5 | Computer Hardware - Solar | - | - | - |
| 730 | | | 391.7 | 391.7 | Computer Hardware | - | - | - |
| 731 | | | 392 | 392 | Transportation Equipment - Light | 24,365 | 6,737 | - |
| 732 | | | 392.1 | 392.1 | Transportation Equipment - Heavy | - | - | - |
| 733 | | | 392.2 | 392.2 | Transportation Equipment - Trailers | - | 3,037 | - |
| 734 | | | 392.4 | 392.4 | Transportation Equipment - Leaseback | - | - | - |
| 735 | | | 393 | 393 | Stores Equipment | - | - | - |
| 736 | | | 394 | 394 | Tools, Shop & Garage Equipment | (3,513) | - | - |
| 737 | | | 395 | 395 | Laboratory Equipment | - | - | - |
| 738 | | | 396 | 396 | Power Operated Equipment | - | - | - |
| 739 | | | 397.01 | 397.01 | Computer Hardware | (3,276) | - | 13,945 |
| 740 | | | 397.02 | 397.02 | Computer Software | - | - | (21,499) |
| 741 | | | 397.03 | 397.03 | Communication Equipment | - | - | 0 |
| 742 | | | 398 | 398 | Miscellaneous Equipment | - | - | (0) |
| 743 | | | 399.1 | 399.1 | ARO General Plant-1 | - | - | - |
| 744 | **Total Accumulated Reserve G&I Plant - PNM** | | | | | (334,352) | 9,774 | (7,830) |
| 745 | | | | | | | | |
| 746 | **Total Electric Plant In Service** | | 101/106 | | | (25,377,722) | 4,523,374 | (759,401) |
| 747 | | | | | | | | |
| 748 | **Electric Plant Purchased** | | 102 | | | | | |
| 749 | | | | | | | | |
| 750 | **Electric Plant Acquisition Adjustment** | | | | Acq. Adj. - Palo Verde Unit 1&2 (Drexel) | | | |
| 751 | | | | | Acq. Adj. - Palo Verde Unit 2 (First Chicago) | - | - | - |
| 752 | | | | | Acq. Adj. - (EIP) | - | - | - |
| 753 | **Electric Plant Acquisition Adjustment** | | 114 | | | - | - | - |
| 754 | | | | | | | | |
| 755 | **Total Electric Plant** | | | | | (25,377,722) | 4,523,374 | (759,401) |
| 756 | | | | | | | | |

| | A | B | C | D | E | I | J | K |
|---|---|---|---|---|---|---|---|---|
| 1 | **Public Service Company of New Mexico** | | | | | | | |
| 2 | **Schedule C-1** | | | | | | | |
| 3 | **Accumulated Provision for Depreciation and Amortization by Functional Classification** | | | | | | | |
| 4 | **Base Period Ending 6/30/2026** | | | | | | | |
| 5 | **Test Period Ending 9/30/2028** | | | | | | | |
| 6 | Link to WP Plant Lead Sheet | | | | | | | |
| 7 | **Base Period data is historical Information from the Company's Books and Records.** | | | | | | | |
| 8 | This schedule is sponsored by PNM Witness Gutierrez | | | | | | | |
| 9 | | | | | | | | |
| 10 | **Location** | **Location Number Note 2** | **FERC** | **Loc/FERC** | **FERC Description** | **Removal Cost** | **Salvage** | **Other DR/CR** |
| 757 | | | | | | | | |
| 758 | **Corporate Unallocated** | 900 | 303 | 900303 | Miscellaneous Intangible Plant | - | - | - |
| 759 | | 900 | 389 | 900389 | Land and Land Rights | - | - | - |
| 760 | | 900 | 390 | 900390 | Structures and Improvements | (544,406) | - | - |
| 761 | | 900 | 390.1 | 900390.1 | Bulk Power Office Building Remodeling | - | - | - |
| 762 | | 900 | 390.2 | 900390.2 | Bulk Power Office Building | - | - | - |
| 763 | | 900 | 391 | 900391 | Office Furniture and Equipment | - | - | - |
| 764 | | 900 | 391.1 | 900391.1 | Office Furniture and Equipment - PC System | - | - | - |
| 765 | | 900 | 391.2 | 900391.2 | Office Furniture and Equipment - PC's | - | - | - |
| 766 | | 900 | 391.3 | 900391.3 | Computer Hardware | - | - | - |
| 767 | | 900 | 391.5 | 900391.5 | Computer Hardware - Solar | - | - | - |
| 768 | | 900 | 391.7 | 900391.7 | Computer Hardware | - | - | - |
| 769 | | 900 | 392 | 900392 | Transportation Equipment - Light | - | - | - |
| 770 | | 900 | 392.1 | 900392.1 | Transportation Equipment - Heavy | - | - | - |
| 771 | | 900 | 392.2 | 900392.2 | Transportation Equipment - Trailers | - | - | - |
| 772 | | 900 | 392.4 | 900392.4 | Transportation Equipment - Leaseback | - | - | - |
| 773 | | 900 | 393 | 900393 | Stores Equipment | - | - | - |
| 774 | | 900 | 394 | 900394 | Tools, Shop & Garage Equipment | - | - | - |
| 775 | | 900 | 395 | 900395 | Laboratory Equipment | - | - | - |
| 776 | | 900 | 396 | 900396 | Power Operated Equipment | - | - | - |
| 777 | | 900 | 397 | 900397 | Communication Equipment | - | - | - |
| 778 | | 900 | 397.01 | 900397.01 | Computer Hardware | - | - | - |
| 779 | | 900 | 397.02 | 900397.02 | Computer Software | - | - | - |
| 780 | | 900 | 397.03 | 900397.03 | Communication Equipment | - | - | - |
| 781 | | 900 | 397.2 | 900397.2 | Communication Equipment | - | - | - |
| 782 | | 900 | 397.3 | 900397.3 | Communication Equipment | - | - | - |
| 783 | | 900 | 398 | 900398 | Miscellaneous Equipment | - | - | - |
| 784 | | 900 | 399.1 | 900399.1 | ARO General Plant-1 | - | - | - |
| 785 | | | | | | | | |
| 786 | **Total Accumulated Reserve Corporate Plant** | | | | | (544,406) | - | - |
| 787 | | | | | | | | |
| 788 | **Total Electric Plant In Service - with corporate** | | 101/106 | | | (25,922,128) | 4,523,374 | (759,401) |
| 789 | | | | | | | | |
| 790 | **Electric Plant Purchased - with Corporate** | | 102 | | | | | |
| 791 | | | | | | | | |
| 792 | **Electric Plant Acq. Adj. - with Corporate** | | 114 | | | - | - | - |
| 793 | | | | | | | | |
| 794 | **Total Electric Plant - with Corporate** | | | | | (25,922,128) | 4,523,374 | (759,401) |

| | A | B | C | D | E | L | M | N |
|---|---|---|---|---|---|---|---|---|
| 1 | **Public Service Company of New Mexico** | | | | | | | |
| 2 | **Schedule C-1** | | | | | | | |
| 3 | **Accumulated Provision for Depreciation and Amortization by Functional Classification** | | | | | | | |
| 4 | **Base Period Ending 6/30/2026** | | | | | | | |
| 5 | **Test Period Ending 9/30/2028** | | | | | | | |
| 6 | Link to WP Plant Lead Sheet | | | | | | | |
| 7 | **Base Period data is historical Information from the Company's Books and Records.** | | | | | | | |
| 8 | This schedule is sponsored by PNM Witness Gutierrez | | | | | | | |
| 9 | | | | | | | **WP C1a, Column X** | |
| 10 | **Location** | **Location Number Note 2** | **FERC** | **Loc/FERC** | **FERC Description** | **Base Period Ending Balance 6/30/2026** | **Base Period Adjustments** | **Adjusted Base Period Ending Balance 6/30/2026** |
| 11 | | | | | | | | |
| 12 | **Production Plant** | | | | | | | |
| 13 | **Steam Production** | | | | | | | |
| 56 | **All - Steam** | | | | | | | |
| 57 | | | 310 | | Land and Land Rights | - | - | - |
| 58 | | | 310.1 | | Land Right of Way | 18,262 | - | 18,262 |
| 59 | | | 311 | | Structures & Improvements | 7,800,466 | - | 7,800,466 |
| 60 | | | 312 | | Boiler Plant Equipment | 93,395,116 | - | 93,395,116 |
| 61 | | | 314 | | Turbogenerator Units | 37,245,966 | - | 37,245,966 |
| 62 | | | 315 | | Accessory Electric Equipment | 10,182,536 | - | 10,182,536 |
| 63 | | | 315.01 | | Computer Hardware | - | - | - |
| 64 | | | 315.02 | | Computer Software | 609,097 | - | 609,097 |
| 65 | | | 315.03 | | Communication Equipment | 192,743 | - | 192,743 |
| 66 | | | 316 | | Misc Power Plant Equipment | 5,771,449 | - | 5,771,449 |
| 67 | | | 317 | | Asset Retirement Costs - Steam | 3,778,674 | - | 3,778,674 |
| 68 | **Total Steam Production Accumulated Reserve** | | | | | 158,994,307 | - | 158,994,307 |
| 69 | | | | | | | | |
| 70 | | | | | | | | |
| 71 | **Nuclear Production** | | | | | | | |
| 129 | **All - Nuclear** | | | | | | | |
| 130 | | | 320 | | Land and Land Rights | 0 | - | 0 |
| 131 | | | 320.1 | | Land - Right of Way | 29,933 | - | 29,933 |
| 132 | | | 321 | | Structures and Improvements | 111,193,063 | - | 111,193,063 |
| 133 | | | 322 | | Reactor Plant Equipment | 174,280,856 | - | 174,280,856 |
| 134 | | | 323 | | Turbogenerator Units | 60,741,739 | - | 60,741,739 |
| 135 | | | 324 | | Accessory Electric Equipment | 43,167,077 | - | 43,167,077 |
| 136 | | | 324.01 | | Computer Hardware | - | - | - |
| 137 | | | 324.02 | | Computer Software | 3,474,656 | - | 3,474,656 |
| 138 | | | 324.03 | | Communication Equipment | 193,996 | - | 193,996 |
| 139 | | | 325 | | Misc Power Plant Equipment | 38,135,329 | - | 38,135,329 |
| 140 | | | 326 | | Asset Retirement Costs Nuclear Prod Plant | 3,101,067 | (3,101,067.34) | - |
| 141 | **Total Nuclear Production Gross Accumulated Reserve** | | | | | 434,317,716 | (3,101,067) | 431,216,648 |
| 142 | | | | | | | | |
| 143 | | | | | | | | |

| | A | B | C | D | E | L | M | N |
|---|---|---|---|---|---|---|---|---|
| 1 | **Public Service Company of New Mexico** | | | | | | | |
| 2 | **Schedule C-1** | | | | | | | |
| 3 | **Accumulated Provision for Depreciation and Amortization by Functional Classification** | | | | | | | |
| 4 | **Base Period Ending 6/30/2026** | | | | | | | |
| 5 | **Test Period Ending 9/30/2028** | | | | | | | |
| 6 | Link to WP Plant Lead Sheet | | | | | | | |
| 7 | **Base Period data is historical Information from the Company's Books and Records.** | | | | | | | |
| 8 | This schedule is sponsored by PNM Witness Gutierrez | | | | | | | |
| 9 | | | | | | | **WP C1a, Column X** | |
| 10 | **Location** | **Location Number Note 2** | **FERC** | **Loc/FERC** | **FERC Description** | **Base Period Ending Balance 6/30/2026** | **Base Period Adjustments** | **Adjusted Base Period Ending Balance 6/30/2026** |
| 144 | **Solar Production** | | | | | | | |
| 237 | **All - Solar** | | | | | | | |
| 238 | | | 338.01 | | Land & Land Rights | - | - | - |
| 239 | | | 338.02 | | Structures and Improvements | 112,638 | - | 112,638 |
| 240 | | | 338.04 | | Solar Panels | 107,982,457 | - | 107,982,457 |
| 241 | | | 338.05 | | Collector System | 2,081,562 | - | 2,081,562 |
| 242 | | | 338.07 | | Solar Inverters | - | - | - |
| 243 | | | 338.08 | | Other Accessory Electrical Equipment | 11,875,171 | - | 11,875,171 |
| 244 | | | 338.09 | | Computer Hardware | 12,077 | - | 12,077 |
| 245 | | | 338.10 | | Computer Software | - | - | - |
| 246 | | | 338.11 | | Communication Equipment | 202,275 | - | 202,275 |
| 247 | | | 338.12 | | Misc. Power Plant Equipment | 1,826,693 | - | 1,826,693 |
| 248 | **Total Solar Production Gross Accumulated Reserve** | | | | | 124,092,873 | - | 124,092,873 |
| 249 | | | | | | | | |
| 250 | **Other Production** | | | | | | | |
| 251 | | | | | | | | |
| 252 | **Other Production - Gas:** | | | | | | | |
| 339 | **All - Gas** | | 340 | | Land and Land Rights | - | - | - |
| 340 | | | 340.1 | | Land - Right of Way | 749,696 | - | 749,696 |
| 341 | | | 341 | | Structures and Improvements | 42,138,787 | - | 42,138,787 |
| 342 | | | 342 | | Fuel Holders, Producers, Accessories | 57,222,237 | - | 57,222,237 |
| 343 | | | 343 | | Prime Movers | - | - | - |
| 344 | | | 344 | | Generators | 95,112,532 | - | 95,112,532 |
| 345 | | | 345 | | Accessory Electric Equipment | 8,302,819 | - | 8,302,819 |
| 346 | | | 345.01 | | Computer Hardware | 38,621 | - | 38,621 |
| 347 | | | 345.02 | | Computer Software | 44,683 | - | 44,683 |
| 348 | | | 345.03 | | Communication Equipment | 5,340 | - | 5,340 |
| 349 | | | 346 | | Misc Power Plant Equipment | 10,681,930 | - | 10,681,930 |
| 350 | | | 347 | | Asset Retirement Costs - Other Production | 1,174,384 | - | 1,174,384 |
| 351 | **Total Other Production Plant - Gas** | | | | | 215,471,030 | - | 215,471,030 |
| 352 | | | | | | | | |
| 353 | | | | | | | | |
| 354 | **Total Other Production Accumulated Reserve** | | | | | 215,471,030 | - | 215,471,030 |
| 355 | | | | | | | | |
| 356 | **Total Accumulated Reserve Production** | | | | | 932,875,927 | (3,101,067) | 929,774,859 |

| | A | B | C | D | E | L | M | N |
|---|---|---|---|---|---|---|---|---|
| 1 | **Public Service Company of New Mexico** | | | | | | | |
| 2 | **Schedule C-1** | | | | | | | |
| 3 | **Accumulated Provision for Depreciation and Amortization by Functional Classification** | | | | | | | |
| 4 | **Base Period Ending 6/30/2026** | | | | | | | |
| 5 | **Test Period Ending 9/30/2028** | | | | | | | |
| 6 | Link to WP Plant Lead Sheet | | | | | | | |
| 7 | **Base Period data is historical Information from the Company's Books and Records.** | | | | | | | |
| 8 | This schedule is sponsored by PNM Witness Gutierrez | | | | | | | |
| 9 | | | | | | | **WP C1a, Column X** | |
| 10 | **Location** | **Location Number Note 2** | **FERC** | **Loc/FERC** | **FERC Description** | **Base Period Ending Balance 6/30/2026** | **Base Period Adjustments** | **Adjusted Base Period Ending Balance 6/30/2026** |
| 357 | | | | | | | | |
| 358 | | | | | | | | |
| 359 | **Accumulated Reserve Battery Storage Plant** | | | | | | | |
| 386 | **All - Energy Storage** | | 387.01 | 387.01 | Land & Land Rights | - | - | - |
| 387 | | | 387.02 | 387.02 | Structures & Improvements | 25,849 | - | 25,849 |
| 388 | | | 387.03 | 387.03 | Energy Storage Equipment | 4,283,708 | - | 4,283,708 |
| 389 | | | 387.05 | 387.05 | Collector System | 187,233 | - | 187,233 |
| 390 | | | 387.06 | 387.06 | Generator Step-Up Transformers (GSU) | 66,442 | - | 66,442 |
| 391 | | | 387.07 | 387.07 | Inverters | - | - | - |
| 392 | | | 387.08 | 387.08 | Computer Hardware | - | - | - |
| 393 | | | 387.09 | 387.09 | Computer Software | 248,005 | - | 248,005 |
| 394 | | | 387.10 | 387.10 | Communication Equipment | 21,119 | - | 21,119 |
| 395 | | | 387.11 | 387.11 | Misc. Energy Storage Equipment | 1,777,909 | - | 1,777,909 |
| 396 | | | 387.12 | 387.12 | Asset Retirement Costs for Energy Storage | - | - | - |
| 397 | **Total Accumulated Reserve Energy Storage Plant** | | | | | 6,610,264 | - | 6,610,264 |
| 398 | | | | | | | | |
| 399 | | | | | | | | |
| 400 | **Accumulated Reserve Transmission Plant** | | | | | | | |
| 453 | **All - Transmission** | | | | | | | |
| 454 | | | 350 | 350 | Land and Land Rights | 6,209,682 | - | 6,209,682 |
| 455 | | | 350.1 | 350.1 | Land - Right of Way | 25,872,333 | - | 25,872,333 |
| 456 | | | 351.01 | 351.01 | Computer Hardware | 4,534,589 | - | 4,534,589 |
| 457 | | | 351.02 | 351.02 | Computer Software | 4,674,977 | - | 4,674,977 |
| 458 | | | 351.03 | 351.03 | Communication Equipment | 16,305,427 | - | 16,305,427 |
| 459 | | | 352 | 352 | Structures and Improvements | 25,004,394 | - | 25,004,394 |
| 460 | | | 353 | 353 | Station Equipment | 231,431,263 | - | 231,431,263 |
| 461 | | | 353.1 | 353.1 | Station Equipment - Step-up Xfmr and Aux | 6,671,732 | - | 6,671,732 |
| 462 | | | 354 | 354 | Towers and Fixtures | 48,076,118 | - | 48,076,118 |
| 463 | | | 355 | 355 | Poles and Fixtures | 138,033,604 | - | 138,033,604 |
| 464 | | | 356 | 356 | Overhead Conductors and Devices | 101,714,545 | - | 101,714,545 |
| 465 | | | 357 | 357 | Underground Conduit | 5,875 | - | 5,875 |
| 466 | | | 359 | 359 | Roads and Trails | 3,071,259 | - | 3,071,259 |
| 467 | **Total Accumulated Reserve Transmission Plant** | | | | | 611,605,797 | - | 611,605,797 |
| 468 | | | | | | | | |

| | A | B | C | D | E | L | M | N |
|---|---|---|---|---|---|---|---|---|
| 1 | **Public Service Company of New Mexico** | | | | | | | |
| 2 | **Schedule C-1** | | | | | | | |
| 3 | **Accumulated Provision for Depreciation and Amortization by Functional Classification** | | | | | | | |
| 4 | **Base Period Ending 6/30/2026** | | | | | | | |
| 5 | **Test Period Ending 9/30/2028** | | | | | | | |
| 6 | Link to WP Plant Lead Sheet | | | | | | | |
| 7 | **Base Period data is historical Information from the Company's Books and Records.** | | | | | | | |
| 8 | This schedule is sponsored by PNM Witness Gutierrez | | | | | | | |
| 9 | | | | | | | **WP C1a, Column X** | |
| 10 | **Location** | **Location Number Note 2** | **FERC** | **Loc/FERC** | **FERC Description** | **Base Period Ending Balance 6/30/2026** | **Base Period Adjustments** | **Adjusted Base Period Ending Balance 6/30/2026** |
| 469 | | | | | | | | |
| 470 | | | | | | | | |
| 471 | **Accumulated Reserve Distribution Plant** | | | | | | | |
| 665 | **All - Distribution** | | | | | | | |
| 666 | | | 360 | | Land and Land Rights | 255,704 | - | 255,704 |
| 667 | | | 360.1 | | Land - Right of Way | 1,246,945 | - | 1,246,945 |
| 668 | | | 361 | | Structures and Improvements | 12,389,077 | - | 12,389,077 |
| 669 | | | 362 | | Station Equipment | 108,867,166 | - | 108,867,166 |
| 670 | | | 363.01 | | Computer Hardware | 1,869,487 | - | 1,869,487 |
| 671 | | | 363.02 | | Computer Software | 17,642,040 | - | 17,642,040 |
| 672 | | | 363.03 | | Communication Equipment | 7,058,066 | - | 7,058,066 |
| 673 | | | 364 | | Poles, Towers and Fixtures | 98,276,569 | - | 98,276,569 |
| 674 | | | 365 | | Overhead Conductors and Devices | 114,636,160 | - | 114,636,160 |
| 675 | | | 366 | | Underground Conduit | 74,984,872 | - | 74,984,872 |
| 676 | | | 367 | | Underground Conductors and Devices | 148,041,155 | - | 148,041,155 |
| 677 | | | 368 | | Line Transformers | 126,093,791 | - | 126,093,791 |
| 678 | | | 369 | | Services | 53,233,025 | - | 53,233,025 |
| 679 | | | 369.1 | | Services - Underground | 85,529,798 | - | 85,529,798 |
| 680 | | | 370 | | Meters | 12,871,407 | - | 12,871,407 |
| 681 | | | 370.4 | | Meters - Grid Mod | 2,633 | - | 2,633 |
| 682 | | | 371 | | Installations on Customers' Premises | 8,621,527 | - | 8,621,527 |
| 683 | | | 371.1 | | Leased Flood Lighting | 266,445 | - | 266,445 |
| 684 | | | 373 | | Street Lighting and Signal Systems | 13,133,398 | - | 13,133,398 |
| 685 | | | 374 | | Asset Retirement Costs - Distribution | 0 | - | 0 |
| 686 | **Total Accumulated Reserve Distribution Plant** | | | | | 885,019,265 | - | 885,019,265 |
| 687 | | | | | | | | |

| | A | B | C | D | E | L | M | N |
|---|---|---|---|---|---|---|---|---|
| 1 | **Public Service Company of New Mexico** | | | | | | | |
| 2 | **Schedule C-1** | | | | | | | |
| 3 | **Accumulated Provision for Depreciation and Amortization by Functional Classification** | | | | | | | |
| 4 | **Base Period Ending 6/30/2026** | | | | | | | |
| 5 | **Test Period Ending 9/30/2028** | | | | | | | |
| 6 | Link to WP Plant Lead Sheet | | | | | | | |
| 7 | **Base Period data is historical Information from the Company's Books and Records.** | | | | | | | |
| 8 | This schedule is sponsored by PNM Witness Gutierrez | | | | | | | |
| 9 | | | | | | | **WP C1a, Column X** | |
| 10 | **Location** | **Location Number Note 2** | **FERC** | **Loc/FERC** | **FERC Description** | **Base Period Ending Balance 6/30/2026** | **Base Period Adjustments** | **Adjusted Base Period Ending Balance 6/30/2026** |
| 689 | **Accumulated Reserve G&I Plant (303,389-399)** | | | | | | | |
| 719 | **Total General & Intangible Plant** | | | | | | | |
| 720 | | | 303 | 303 | Miscellaneous Intangible Plant | - | - | - |
| 721 | | | 389 | 389 | Land and Land Rights | - | - | - |
| 722 | | | 390 | 390 | Structures and Improvements | 29,738,030 | - | 29,738,030 |
| 723 | | | 390.1 | 390.1 | Bulk Power Office Building Remodeling | 5,725,295 | - | 5,725,295 |
| 724 | | | 390.2 | 390.2 | Bulk Power Office Building | 5,846,125 | - | 5,846,125 |
| 725 | | | 391 | 391 | Office Furniture and Equipment | 2,732,785 | - | 2,732,785 |
| 726 | | | 391.1 | 391.1 | Office Furniture and Equipment - PC System | - | - | - |
| 727 | | | 391.2 | 391.2 | Office Furniture and Equipment - PC's | - | - | - |
| 728 | | | 391.3 | 391.3 | Computer Hardware | - | - | - |
| 729 | | | 391.5 | 391.5 | Computer Hardware - Solar | - | - | - |
| 730 | | | 391.7 | 391.7 | Computer Hardware | - | - | - |
| 731 | | | 392 | 392 | Transportation Equipment - Light | 2,089,362 | - | 2,089,362 |
| 732 | | | 392.1 | 392.1 | Transportation Equipment - Heavy | 3,514,980 | - | 3,514,980 |
| 733 | | | 392.2 | 392.2 | Transportation Equipment - Trailers | 3,447,815 | - | 3,447,815 |
| 734 | | | 392.4 | 392.4 | Transportation Equipment - Leaseback | - | - | - |
| 735 | | | 393 | 393 | Stores Equipment | 81,800 | - | 81,800 |
| 736 | | | 394 | 394 | Tools, Shop & Garage Equipment | 8,908,131 | - | 8,908,131 |
| 737 | | | 395 | 395 | Laboratory Equipment | 120,491 | - | 120,491 |
| 738 | | | 396 | 396 | Power Operated Equipment | 4,109,707 | - | 4,109,707 |
| 739 | | | 397.01 | 397.01 | Computer Hardware | 1,651,220 | - | 1,651,220 |
| 740 | | | 397.02 | 397.02 | Computer Software | 21,019,317 | - | 21,019,317 |
| 741 | | | 397.03 | 397.03 | Communication Equipment | - | - | - |
| 742 | | | 398 | 398 | Miscellaneous Equipment | 1,162,240 | - | 1,162,240 |
| 743 | | | 399.1 | 399.1 | ARO General Plant-1 | 16,500 | - | 16,500 |
| 744 | **Total Accumulated Reserve G&I Plant - PNM** | | | | | 90,163,797 | - | 90,163,797 |
| 745 | | | | | | | | |
| 746 | **Total Electric Plant In Service** | | 101/106 | | | 2,526,275,049 | (3,101,067) | 2,523,173,982 |
| 747 | | | | | | | | |
| 748 | **Electric Plant Purchased** | | 102 | | | | | |
| 749 | | | | | | | | |
| 750 | **Electric Plant Acquisition Adjustment** | | | | Acq. Adj. - Palo Verde Unit 1&2 (Drexel) | | | |
| 751 | | | | | Acq. Adj. - Palo Verde Unit 2 (First Chicago) | - | - | - |
| 752 | | | | | Acq. Adj. - (EIP) | - | - | - |
| 753 | **Electric Plant Acquisition Adjustment** | | 114 | | | - | - | - |
| 754 | | | | | | | | |
| 755 | **Total Electric Plant** | | | | | 2,526,275,049 | (3,101,067) | 2,523,173,982 |
| 756 | | | | | | | | |

| | A | B | C | D | E | L | M | N |
|---|---|---|---|---|---|---|---|---|
| 1 | **Public Service Company of New Mexico** | | | | | | | |
| 2 | **Schedule C-1** | | | | | | | |
| 3 | **Accumulated Provision for Depreciation and Amortization by Functional Classification** | | | | | | | |
| 4 | **Base Period Ending 6/30/2026** | | | | | | | |
| 5 | **Test Period Ending 9/30/2028** | | | | | | | |
| 6 | Link to WP Plant Lead Sheet | | | | | | | |
| 7 | **Base Period data is historical Information from the Company's Books and Records.** | | | | | | | |
| 8 | This schedule is sponsored by PNM Witness Gutierrez | | | | | | | |
| 9 | | | | | | | **WP C1a, Column X** | |
| 10 | **Location** | **Location Number Note 2** | **FERC** | **Loc/FERC** | **FERC Description** | **Base Period Ending Balance 6/30/2026** | **Base Period Adjustments** | **Adjusted Base Period Ending Balance 6/30/2026** |
| 757 | | | | | | | | |
| 758 | **Corporate Unallocated** | 900 | 303 | 900303 | Miscellaneous Intangible Plant | - | - | - |
| 759 | | 900 | 389 | 900389 | Land and Land Rights | (66,097) | 19,532 | (46,565) |
| 760 | | 900 | 390 | 900390 | Structures and Improvements | 23,342,198 | (6,693,161) | 16,649,038 |
| 761 | | 900 | 390.1 | 900390.1 | Bulk Power Office Building Remodeling | - | - | - |
| 762 | | 900 | 390.2 | 900390.2 | Bulk Power Office Building | - | - | - |
| 763 | | 900 | 391 | 900391 | Office Furniture and Equipment | 319,037 | (106,055) | 212,982 |
| 764 | | 900 | 391.1 | 900391.1 | Office Furniture and Equipment - PC System | - | - | - |
| 765 | | 900 | 391.2 | 900391.2 | Office Furniture and Equipment - PC's | - | - | - |
| 766 | | 900 | 391.3 | 900391.3 | Computer Hardware | - | - | - |
| 767 | | 900 | 391.5 | 900391.5 | Computer Hardware - Solar | - | - | - |
| 768 | | 900 | 391.7 | 900391.7 | Computer Hardware | - | - | - |
| 769 | | 900 | 392 | 900392 | Transportation Equipment - Light | 142,111 | (49,867) | 92,244 |
| 770 | | 900 | 392.1 | 900392.1 | Transportation Equipment - Heavy | 14,177 | (4,189) | 9,988 |
| 771 | | 900 | 392.2 | 900392.2 | Transportation Equipment - Trailers | 6,918 | (2,428) | 4,490 |
| 772 | | 900 | 392.4 | 900392.4 | Transportation Equipment - Leaseback | - | - | - |
| 773 | | 900 | 393 | 900393 | Stores Equipment | - | - | - |
| 774 | | 900 | 394 | 900394 | Tools, Shop & Garage Equipment | 306,743 | (105,328) | 201,415 |
| 775 | | 900 | 395 | 900395 | Laboratory Equipment | - | - | - |
| 776 | | 900 | 396 | 900396 | Power Operated Equipment | 21,249 | (6,279) | 14,970 |
| 777 | | 900 | 397 | 900397 | Communication Equipment | - | - | - |
| 778 | | 900 | 397.01 | 900397.01 | Computer Hardware | 18,734,218 | (5,670,870) | 13,063,348 |
| 779 | | 900 | 397.02 | 900397.02 | Computer Software | 116,565,331 | (36,427,282) | 80,138,050 |
| 780 | | 900 | 397.03 | 900397.03 | Communication Equipment | 3,545,630 | (1,244,161) | 2,301,468 |
| 781 | | 900 | 397.2 | 900397.2 | Communication Equipment | | | - |
| 782 | | 900 | 397.3 | 900397.3 | Communication Equipment | | | - |
| 783 | | 900 | 398 | 900398 | Miscellaneous Equipment | - | - | - |
| 784 | | 900 | 399.1 | 900399.1 | ARO General Plant-1 | - | - | - |
| 785 | | | | | | | | |
| 786 | **Total Accumulated Reserve Corporate Plant** | | | | | 162,931,515 | (50,290,088) | 112,641,427 |
| 787 | | | | | | | | |
| 788 | **Total Electric Plant In Service - with corporate** | | 101/106 | | | 2,689,206,565 | (53,391,156) | 2,635,815,409 |
| 789 | | | | | | | | |
| 790 | **Electric Plant Purchased - with Corporate** | | 102 | | | | | |
| 791 | | | | | | | | |
| 792 | **Electric Plant Acq. Adj. - with Corporate** | | 114 | | | - | - | - |
| 793 | | | | | | | | |
| 794 | **Total Electric Plant - with Corporate** | | | | | 2,689,206,565 | (53,391,156) | 2,635,815,409 |

| | A | B | C | D | E | O | P | Q |
|---|---|---|---|---|---|---|---|---|
| 1 | **Public Service Company of New Mexico** | | | | | | | |
| 2 | **Schedule C-1** | | | | | | | |
| 3 | **Accumulated Provision for Depreciation and Amortization by Functional Classification** | | | | | | | |
| 4 | **Base Period Ending 6/30/2026** | | | | | | | |
| 5 | **Test Period Ending 9/30/2028** | | | | | | | |
| 6 | Link to WP Plant Lead Sheet | | | | | | | |
| 7 | **Base Period data is historical Information from the Company's Books and Records.** | | | | | | | |
| 8 | This schedule is sponsored by PNM Witness Gutierrez | | | | | | | |
| 9 | | | | | | | | |
| 10 | **Location** | **Location Number Note 2** | **FERC** | **Loc/FERC** | **FERC Description** | **Reference** | **Linkage 1 Beginning Balance 7/1/2026** | **Depreciation** |
| 11 | | | | | | | | |
| 12 | **Production Plant** | | | | | | | |
| 13 | **Steam Production** | | | | | | | |
| 56 | **All - Steam** | | | | | | | |
| 57 | | | 310 | | Land and Land Rights | | - | - |
| 58 | | | 310.1 | | Land Right of Way | | 18,262 | 367 |
| 59 | | | 311 | | Structures & Improvements | | 7,800,466 | 666,096 |
| 60 | | | 312 | | Boiler Plant Equipment | | 93,395,116 | 5,232,373 |
| 61 | | | 314 | | Turbogenerator Units | | 37,245,966 | 2,603,105 |
| 62 | | | 315 | | Accessory Electric Equipment | | 10,182,536 | 710,527 |
| 63 | | | 315.01 | | Computer Hardware | | - | - |
| 64 | | | 315.02 | | Computer Software | | 609,097 | 218,101 |
| 65 | | | 315.03 | | Communication Equipment | | 192,743 | 22,270 |
| 66 | | | 316 | | Misc Power Plant Equipment | | 5,771,449 | 933,619 |
| 67 | | | 317 | | Asset Retirement Costs - Steam | | 3,778,674 | (113,882) |
| 68 | **Total Steam Production Accumulated Reserve** | | | | | | 158,994,307 | 10,272,577 |
| 69 | | | | | | | | |
| 70 | | | | | | | | |
| 71 | **Nuclear Production** | | | | | | | |
| 129 | **All - Nuclear** | | | | | | | |
| 130 | | | 320 | | Land and Land Rights | | 0 | - |
| 131 | | | 320.1 | | Land - Right of Way | | 29,933 | 668 |
| 132 | | | 321 | | Structures and Improvements | | 111,193,063 | 5,290,316 |
| 133 | | | 322 | | Reactor Plant Equipment | | 174,280,856 | 9,663,045 |
| 134 | | | 323 | | Turbogenerator Units | | 60,741,739 | 3,491,734 |
| 135 | | | 324 | | Accessory Electric Equipment | | 43,167,077 | 1,354,112 |
| 136 | | | 324.01 | | Computer Hardware | | - | - |
| 137 | | | 324.02 | | Computer Software | | 3,474,656 | 2,121,290 |
| 138 | | | 324.03 | | Communication Equipment | | 193,996 | 30,621 |
| 139 | | | 325 | | Misc Power Plant Equipment | | 38,135,329 | 2,056,350 |
| 140 | | | 326 | | Asset Retirement Costs Nuclear Prod Plant | | - | 134,219 |
| 141 | **Total Nuclear Production Gross Accumulated Reserve** | | | | | | 431,216,648 | 24,142,355 |
| 142 | | | | | | | | |
| 143 | | | | | | | | |

| | A | B | C | D | E | O | P | Q |
|---|---|---|---|---|---|---|---|---|
| 1 | **Public Service Company of New Mexico** | | | | | | | |
| 2 | **Schedule C-1** | | | | | | | |
| 3 | **Accumulated Provision for Depreciation and Amortization by Functional Classification** | | | | | | | |
| 4 | **Base Period Ending 6/30/2026** | | | | | | | |
| 5 | **Test Period Ending 9/30/2028** | | | | | | | |
| 6 | Link to WP Plant Lead Sheet | | | | | | | |
| 7 | **Base Period data is historical Information from the Company's Books and Records.** | | | | | | | |
| 8 | This schedule is sponsored by PNM Witness Gutierrez | | | | | | | |
| 9 | | | | | | | | |
| 10 | **Location** | **Location Number Note 2** | **FERC** | **Loc/FERC** | **FERC Description** | **Reference** | **Linkage 1 Beginning Balance 7/1/2026** | **Depreciation** |
| 144 | **Solar Production** | | | | | | | |
| 237 | **All - Solar** | | | | | | | |
| 238 | | | 338.01 | | Land & Land Rights | | - | - |
| 239 | | | 338.02 | | Structures and Improvements | | 112,638 | 9,133 |
| 240 | | | 338.04 | | Solar Panels | | 107,982,457 | 9,265,030 |
| 241 | | | 338.05 | | Collector System | | 2,081,562 | 343,386 |
| 242 | | | 338.07 | | Solar Inverters | | - | 218,400 |
| 243 | | | 338.08 | | Other Accessory Electrical Equipment | | 11,875,171 | 855,522 |
| 244 | | | 338.09 | | Computer Hardware | | 12,077 | 10,352 |
| 245 | | | 338.10 | | Computer Software | | - | - |
| 246 | | | 338.11 | | Communication Equipment | | 202,275 | 42,505 |
| 247 | | | 338.12 | | Misc. Power Plant Equipment | | 1,826,693 | 166,635 |
| 248 | **Total Solar Production Gross Accumulated Reserve** | | | | | | 124,092,873 | 10,910,964 |
| 249 | | | | | | | | |
| 250 | **Other Production** | | | | | | | |
| 251 | | | | | | | | |
| 252 | **Other Production - Gas:** | | | | | | | |
| 339 | **All - Gas** | | 340 | | Land and Land Rights | | - | - |
| 340 | | | 340.1 | | Land - Right of Way | | 749,696 | 70,625 |
| 341 | | | 341 | | Structures and Improvements | | 42,138,787 | 2,988,361 |
| 342 | | | 342 | | Fuel Holders, Producers, Accessories | | 57,222,237 | 4,163,706 |
| 343 | | | 343 | | Prime Movers | | - | - |
| 344 | | | 344 | | Generators | | 95,112,532 | 8,866,653 |
| 345 | | | 345 | | Accessory Electric Equipment | | 8,302,819 | 1,262,004 |
| 346 | | | 345.01 | | Computer Hardware | | 38,621 | 10,777 |
| 347 | | | 345.02 | | Computer Software | | 44,683 | 9,749 |
| 348 | | | 345.03 | | Communication Equipment | | 5,340 | 2,591 |
| 349 | | | 346 | | Misc Power Plant Equipment | | 10,681,930 | 1,568,561 |
| 350 | | | 347 | | Asset Retirement Costs - Other Production | | 1,174,384 | 305,673 |
| 351 | **Total Other Production Plant - Gas** | | | | | | 215,471,030 | 19,248,700 |
| 352 | | | | | | | | |
| 353 | | | | | | | | |
| 354 | **Total Other Production Accumulated Reserve** | | | | | | 215,471,030 | 19,248,700 |
| 355 | | | | | | | | |
| 356 | **Total Accumulated Reserve Production** | | | | | | 929,774,859 | 64,574,596 |

| | A | B | C | D | E | O | P | Q |
|---|---|---|---|---|---|---|---|---|
| 1 | **Public Service Company of New Mexico** | | | | | | | |
| 2 | **Schedule C-1** | | | | | | | |
| 3 | **Accumulated Provision for Depreciation and Amortization by Functional Classification** | | | | | | | |
| 4 | **Base Period Ending 6/30/2026** | | | | | | | |
| 5 | **Test Period Ending 9/30/2028** | | | | | | | |
| 6 | Link to WP Plant Lead Sheet | | | | | | | |
| 7 | **Base Period data is historical Information from the Company's Books and Records.** | | | | | | | |
| 8 | This schedule is sponsored by PNM Witness Gutierrez | | | | | | | |
| 9 | | | | | | | | |
| 10 | **Location** | **Location Number Note 2** | **FERC** | **Loc/FERC** | **FERC Description** | **Reference** | **Linkage 1 Beginning Balance 7/1/2026** | **Depreciation** |
| 357 | | | | | | | | |
| 358 | | | | | | | | |
| 359 | **Accumulated Reserve Battery Storage Plant** | | | | | | | |
| 386 | **All - Energy Storage** | | 387.01 | 387.01 | Land & Land Rights | | - | - |
| 387 | | | 387.02 | 387.02 | Structures & Improvements | | 25,849 | 717,693 |
| 388 | | | 387.03 | 387.03 | Energy Storage Equipment | | 4,283,708 | 1,646,515 |
| 389 | | | 387.05 | 387.05 | Collector System | | 187,233 | 793,475 |
| 390 | | | 387.06 | 387.06 | Generator Step-Up Transformers (GSU) | | 66,442 | 1,831,676 |
| 391 | | | 387.07 | 387.07 | Inverters | | - | - |
| 392 | | | 387.08 | 387.08 | Computer Hardware | | - | 1,069,628 |
| 393 | | | 387.09 | 387.09 | Computer Software | | 248,005 | 154,424 |
| 394 | | | 387.10 | 387.10 | Communication Equipment | | 21,119 | 38,196 |
| 395 | | | 387.11 | 387.11 | Misc. Energy Storage Equipment | | 1,777,909 | 242,688 |
| 396 | | | 387.12 | 387.12 | Asset Retirement Costs for Energy Storage | | - | - |
| 397 | **Total Accumulated Reserve Energy Storage Plant** | | | | | | 6,610,264 | 6,494,295 |
| 398 | | | | | | | | |
| 399 | | | | | | | | |
| 400 | **Accumulated Reserve Transmission Plant** | | | | | | | |
| 453 | **All - Transmission** | | | | | | | |
| 454 | | | 350 | 350 | Land and Land Rights | | 6,209,682 | - |
| 455 | | | 350.1 | 350.1 | Land - Right of Way | | 25,872,333 | 511,997 |
| 456 | | | 351.01 | 351.01 | Computer Hardware | | 4,534,589 | 3,492,041 |
| 457 | | | 351.02 | 351.02 | Computer Software | | 4,674,977 | 1,435,270 |
| 458 | | | 351.03 | 351.03 | Communication Equipment | | 16,305,427 | 3,295,255 |
| 459 | | | 352 | 352 | Structures and Improvements | | 25,004,394 | 4,772,420 |
| 460 | | | 353 | 353 | Station Equipment | | 231,431,263 | 27,600,117 |
| 461 | | | 353.1 | 353.1 | Station Equipment - Step-up Xfmr and Aux | | 6,671,732 | 340,497 |
| 462 | | | 354 | 354 | Towers and Fixtures | | 48,076,118 | 797,012 |
| 463 | | | 355 | 355 | Poles and Fixtures | | 138,033,604 | 18,897,761 |
| 464 | | | 356 | 356 | Overhead Conductors and Devices | | 101,714,545 | 5,735,818 |
| 465 | | | 357 | 357 | Underground Conduit | | 5,875 | 8,502 |
| 466 | | | 359 | 359 | Roads and Trails | | 3,071,259 | 143,698 |
| 467 | **Total Accumulated Reserve Transmission Plant** | | | | | | 611,605,797 | 67,030,391 |
| 468 | | | | | | | | |

| | A | B | C | D | E | O | P | Q |
|---|---|---|---|---|---|---|---|---|
| 1 | **Public Service Company of New Mexico** | | | | | | | |
| 2 | **Schedule C-1** | | | | | | | |
| 3 | **Accumulated Provision for Depreciation and Amortization by Functional Classification** | | | | | | | |
| 4 | **Base Period Ending 6/30/2026** | | | | | | | |
| 5 | **Test Period Ending 9/30/2028** | | | | | | | |
| 6 | Link to WP Plant Lead Sheet | | | | | | | |
| 7 | **Base Period data is historical Information from the Company's Books and Records.** | | | | | | | |
| 8 | This schedule is sponsored by PNM Witness Gutierrez | | | | | | | |
| 9 | | | | | | | | |
| 10 | **Location** | **Location Number Note 2** | **FERC** | **Loc/FERC** | **FERC Description** | **Reference** | **Linkage 1 Beginning Balance 7/1/2026** | **Depreciation** |
| 469 | | | | | | | | |
| 470 | | | | | | | | |
| 471 | **Accumulated Reserve Distribution Plant** | | | | | | | |
| 665 | **All - Distribution** | | | | | | | |
| 666 | | | 360 | | Land and Land Rights | | 255,704 | - |
| 667 | | | 360.1 | | Land - Right of Way | | 1,246,945 | 32,242 |
| 668 | | | 361 | | Structures and Improvements | | 12,389,077 | 1,289,757 |
| 669 | | | 362 | | Station Equipment | | 108,867,166 | 8,819,488 |
| 670 | | | 363.01 | | Computer Hardware | | 1,869,487 | 2,423,902 |
| 671 | | | 363.02 | | Computer Software | | 17,642,040 | 7,996,370 |
| 672 | | | 363.03 | | Communication Equipment | | 7,058,066 | 1,659,477 |
| 673 | | | 364 | | Poles, Towers and Fixtures | | 98,276,569 | 20,583,752 |
| 674 | | | 365 | | Overhead Conductors and Devices | | 114,636,160 | 12,420,161 |
| 675 | | | 366 | | Underground Conduit | | 74,984,872 | 3,924,089 |
| 676 | | | 367 | | Underground Conductors and Devices | | 148,041,155 | 11,113,641 |
| 677 | | | 368 | | Line Transformers | | 126,093,791 | 7,075,215 |
| 678 | | | 369 | | Services | | 53,233,025 | 3,249,905 |
| 679 | | | 369.1 | | Services - Underground | | 85,529,798 | 5,598,160 |
| 680 | | | 370 | | Meters | | 12,871,407 | 3,135,712 |
| 681 | | | 370.4 | | Meters - Grid Mod | | 2,633 | 858,691 |
| 682 | | | 371 | | Installations on Customers' Premises | | 8,621,527 | 181,649 |
| 683 | | | 371.1 | | Leased Flood Lighting | | 266,445 | 7,442 |
| 684 | | | 373 | | Street Lighting and Signal Systems | | 13,133,398 | 938,273 |
| 685 | | | 374 | | Asset Retirement Costs - Distribution | | 0 | - |
| 686 | **Total Accumulated Reserve Distribution Plant** | | | | | | 885,019,265 | 91,307,927 |
| 687 | | | | | | | | |

| | A | B | C | D | E | O | P | Q |
|---|---|---|---|---|---|---|---|---|
| 1 | **Public Service Company of New Mexico** | | | | | | | |
| 2 | **Schedule C-1** | | | | | | | |
| 3 | **Accumulated Provision for Depreciation and Amortization by Functional Classification** | | | | | | | |
| 4 | **Base Period Ending 6/30/2026** | | | | | | | |
| 5 | **Test Period Ending 9/30/2028** | | | | | | | |
| 6 | Link to WP Plant Lead Sheet | | | | | | | |
| 7 | **Base Period data is historical Information from the Company's Books and Records.** | | | | | | | |
| 8 | This schedule is sponsored by PNM Witness Gutierrez | | | | | | | |
| 9 | | | | | | | | |
| 10 | **Location** | **Location Number Note 2** | **FERC** | **Loc/FERC** | **FERC Description** | **Reference** | **Linkage 1 Beginning Balance 7/1/2026** | **Depreciation** |
| 689 | **Accumulated Reserve G&I Plant (303,389-399)** | | | | | | | |
| 719 | **Total General & Intangible Plant** | | | | | | | |
| 720 | | | 303 | 303 | Miscellaneous Intangible Plant | | - | - |
| 721 | | | 389 | 389 | Land and Land Rights | | - | - |
| 722 | | | 390 | 390 | Structures and Improvements | | 29,738,030 | 1,410,362 |
| 723 | | | 390.1 | 390.1 | Bulk Power Office Building Remodeling | | 5,725,295 | 11,309 |
| 724 | | | 390.2 | 390.2 | Bulk Power Office Building | | 5,846,125 | - |
| 725 | | | 391 | 391 | Office Furniture and Equipment | | 2,732,785 | 251,112 |
| 726 | | | 391.1 | 391.1 | Office Furniture and Equipment - PC System | | - | - |
| 727 | | | 391.2 | 391.2 | Office Furniture and Equipment - PC's | | - | - |
| 728 | | | 391.3 | 391.3 | Computer Hardware | | - | - |
| 729 | | | 391.5 | 391.5 | Computer Hardware - Solar | | - | - |
| 730 | | | 391.7 | 391.7 | Computer Hardware | | - | - |
| 731 | | | 392 | 392 | Transportation Equipment - Light | | 2,089,362 | 237,513 |
| 732 | | | 392.1 | 392.1 | Transportation Equipment - Heavy | | 3,514,980 | 240,924 |
| 733 | | | 392.2 | 392.2 | Transportation Equipment - Trailers | | 3,447,815 | 285,230 |
| 734 | | | 392.4 | 392.4 | Transportation Equipment - Leaseback | | - | - |
| 735 | | | 393 | 393 | Stores Equipment | | 81,800 | 6,529 |
| 736 | | | 394 | 394 | Tools, Shop & Garage Equipment | | 8,908,131 | 1,030,271 |
| 737 | | | 395 | 395 | Laboratory Equipment | | 120,491 | 20,627 |
| 738 | | | 396 | 396 | Power Operated Equipment | | 4,109,707 | 204,898 |
| 739 | | | 397.01 | 397.01 | Computer Hardware | | 1,651,220 | 324,838 |
| 740 | | | 397.02 | 397.02 | Computer Software | | 21,019,317 | 3,466,279 |
| 741 | | | 397.03 | 397.03 | Communication Equipment | | - | - |
| 742 | | | 398 | 398 | Miscellaneous Equipment | | 1,162,240 | 119,073 |
| 743 | | | 399.1 | 399.1 | ARO General Plant-1 | | 16,500 | 315 |
| 744 | **Total Accumulated Reserve G&I Plant - PNM** | | | | | | 90,163,797 | 7,609,279 |
| 745 | | | | | | | | |
| 746 | **Total Electric Plant In Service** | | 101/106 | | | | 2,523,173,982 | 237,016,488 |
| 747 | | | | | | | | |
| 748 | **Electric Plant Purchased** | | 102 | | | | | |
| 749 | | | | | | | | |
| 750 | **Electric Plant Acquisition Adjustment** | | | | Acq. Adj. - Palo Verde Unit 1&2 (Drexel) | | | |
| 751 | | | | | Acq. Adj. - Palo Verde Unit 2 (First Chicago) | | - | 832,053 |
| 752 | | | | | Acq. Adj. - (EIP) | | - | - |
| 753 | **Electric Plant Acquisition Adjustment** | | 114 | | | | - | 832,053 |
| 754 | | | | | | | | |
| 755 | **Total Electric Plant** | | | | | | 2,523,173,982 | 237,848,542 |
| 756 | | | | | | | | |

| | A | B | C | D | E | O | P | Q |
|---|---|---|---|---|---|---|---|---|
| 1 | **Public Service Company of New Mexico** | | | | | | | |
| 2 | **Schedule C-1** | | | | | | | |
| 3 | **Accumulated Provision for Depreciation and Amortization by Functional Classification** | | | | | | | |
| 4 | **Base Period Ending 6/30/2026** | | | | | | | |
| 5 | **Test Period Ending 9/30/2028** | | | | | | | |
| 6 | Link to WP Plant Lead Sheet | | | | | | | |
| 7 | **Base Period data is historical Information from the Company's Books and Records.** | | | | | | | |
| 8 | This schedule is sponsored by PNM Witness Gutierrez | | | | | | | |
| 9 | | | | | | | | |
| 10 | **Location** | **Location Number Note 2** | **FERC** | **Loc/FERC** | **FERC Description** | **Reference** | **Linkage 1 Beginning Balance 7/1/2026** | **Depreciation** |
| 757 | | | | | | | | |
| 758 | **Corporate Unallocated** | 900 | 303 | 900303 | Miscellaneous Intangible Plant | | - | - |
| 759 | | 900 | 389 | 900389 | Land and Land Rights | | (66,097) | - |
| 760 | | 900 | 390 | 900390 | Structures and Improvements | | 23,342,198 | 1,441,827 |
| 761 | | 900 | 390.1 | 900390.1 | Bulk Power Office Building Remodeling | | - | - |
| 762 | | 900 | 390.2 | 900390.2 | Bulk Power Office Building | | - | - |
| 763 | | 900 | 391 | 900391 | Office Furniture and Equipment | | 319,037 | 64,419 |
| 764 | | 900 | 391.1 | 900391.1 | Office Furniture and Equipment - PC System | | - | - |
| 765 | | 900 | 391.2 | 900391.2 | Office Furniture and Equipment - PC's | | - | - |
| 766 | | 900 | 391.3 | 900391.3 | Computer Hardware | | - | - |
| 767 | | 900 | 391.5 | 900391.5 | Computer Hardware - Solar | | - | - |
| 768 | | 900 | 391.7 | 900391.7 | Computer Hardware | | - | - |
| 769 | | 900 | 392 | 900392 | Transportation Equipment - Light | | 142,111 | 17,991 |
| 770 | | 900 | 392.1 | 900392.1 | Transportation Equipment - Heavy | | 14,177 | 2,539 |
| 771 | | 900 | 392.2 | 900392.2 | Transportation Equipment - Trailers | | 6,918 | 343 |
| 772 | | 900 | 392.4 | 900392.4 | Transportation Equipment - Leaseback | | - | (3) |
| 773 | | 900 | 393 | 900393 | Stores Equipment | | - | - |
| 774 | | 900 | 394 | 900394 | Tools, Shop & Garage Equipment | | 306,743 | 29,660 |
| 775 | | 900 | 395 | 900395 | Laboratory Equipment | | - | - |
| 776 | | 900 | 396 | 900396 | Power Operated Equipment | | 21,249 | 719 |
| 777 | | 900 | 397 | 900397 | Communication Equipment | | - | - |
| 778 | | 900 | 397.01 | 900397.01 | Computer Hardware | | 18,734,218 | 7,535,478 |
| 779 | | 900 | 397.02 | 900397.02 | Computer Software | | 116,565,331 | 30,444,853 |
| 780 | | 900 | 397.03 | 900397.03 | Communication Equipment | | 3,545,630 | 1,019,514 |
| 781 | | 900 | 397.2 | 900397.2 | Communication Equipment | | - | - |
| 782 | | 900 | 397.3 | 900397.3 | Communication Equipment | | - | - |
| 783 | | 900 | 398 | 900398 | Miscellaneous Equipment | | - | - |
| 784 | | 900 | 399.1 | 900399.1 | ARO General Plant-1 | | - | - |
| 785 | | | | | | | | |
| 786 | **Total Accumulated Reserve Corporate Plant** | | | | | | 162,931,515 | 40,557,340 |
| 787 | | | | | | | | |
| 788 | **Total Electric Plant In Service - with corporate** | | 101/106 | | | | 2,686,105,497 | 277,573,829 |
| 789 | | | | | | | | |
| 790 | **Electric Plant Purchased - with Corporate** | | 102 | | | | | |
| 791 | | | | | | | | |
| 792 | **Electric Plant Acq. Adj. - with Corporate** | | 114 | | | | - | 832,053 |
| 793 | | | | | | | | |
| 794 | **Total Electric Plant - with Corporate** | | | | | | 2,686,105,497 | 278,405,882 |

| | A | B | C | D | E | R | S | T |
|---|---|---|---|---|---|---|---|---|
| 1 | **Public Service Company of New Mexico** | | | | | | | |
| 2 | **Schedule C-1** | | | | | | | |
| 3 | **Accumulated Provision for Depreciation and Amortization by Functional Classification** | | | | | | | |
| 4 | **Base Period Ending 6/30/2026** | | | | | | | |
| 5 | **Test Period Ending 9/30/2028** | | | | | | | |
| 6 | Link to WP Plant Lead Sheet | | | | | | | |
| 7 | **Base Period data is historical Information from the Company's Books and Records.** | | | | | | | |
| 8 | This schedule is sponsored by PNM Witness Gutierrez | | | | | | | |
| 9 | | | | | | | | |
| 10 | **Location** | **Location Number Note 2** | **FERC** | **Loc/FERC** | **FERC Description** | **Retirements** | **Removal Cost** | **Salvage** |
| 11 | | | | | | | | |
| 12 | **Production Plant** | | | | | | | |
| 13 | **Steam Production** | | | | | | | |
| 56 | **All - Steam** | | | | | | | |
| 57 | | | 310 | | Land and Land Rights | - | - | - |
| 58 | | | 310.1 | | Land Right of Way | - | - | - |
| 59 | | | 311 | | Structures & Improvements | (400,332) | (194,355) | - |
| 60 | | | 312 | | Boiler Plant Equipment | (3,863,712) | (528,604) | - |
| 61 | | | 314 | | Turbogenerator Units | (412,332) | (313,201) | - |
| 62 | | | 315 | | Accessory Electric Equipment | (168,840) | (32,507) | - |
| 63 | | | 315.01 | | Computer Hardware | - | - | - |
| 64 | | | 315.02 | | Computer Software | - | - | - |
| 65 | | | 315.03 | | Communication Equipment | - | - | - |
| 66 | | | 316 | | Misc Power Plant Equipment | (512,784) | (130,029) | - |
| 67 | | | 317 | | Asset Retirement Costs - Steam | - | - | - |
| 68 | **Total Steam Production Accumulated Reserve** | | | | | (5,358,000) | (1,198,696) | - |
| 69 | | | | | | | | |
| 70 | | | | | | | | |
| 71 | **Nuclear Production** | | | | | | | |
| 129 | **All - Nuclear** | | | | | | | |
| 130 | | | 320 | | Land and Land Rights | - | - | - |
| 131 | | | 320.1 | | Land - Right of Way | - | - | - |
| 132 | | | 321 | | Structures and Improvements | (207,180) | (104,007) | - |
| 133 | | | 322 | | Reactor Plant Equipment | (834,468) | (468,030) | - |
| 134 | | | 323 | | Turbogenerator Units | (499,836) | - | - |
| 135 | | | 324 | | Accessory Electric Equipment | (116,592) | - | - |
| 136 | | | 324.01 | | Computer Hardware | - | - | - |
| 137 | | | 324.02 | | Computer Software | - | (44,574) | - |
| 138 | | | 324.03 | | Communication Equipment | - | (7,429) | - |
| 139 | | | 325 | | Misc Power Plant Equipment | (19,332) | (118,865) | - |
| 140 | | | 326 | | Asset Retirement Costs Nuclear Prod Plant | - | - | - |
| 141 | **Total Nuclear Production Gross Accumulated Reserve** | | | | | (1,677,408) | (742,904) | - |
| 142 | | | | | | | | |
| 143 | | | | | | | | |

| | A | B | C | D | E | R | S | T |
|---|---|---|---|---|---|---|---|---|
| 1 | **Public Service Company of New Mexico** | | | | | | | |
| 2 | **Schedule C-1** | | | | | | | |
| 3 | **Accumulated Provision for Depreciation and Amortization by Functional Classification** | | | | | | | |
| 4 | **Base Period Ending 6/30/2026** | | | | | | | |
| 5 | **Test Period Ending 9/30/2028** | | | | | | | |
| 6 | Link to WP Plant Lead Sheet | | | | | | | |
| 7 | **Base Period data is historical Information from the Company's Books and Records.** | | | | | | | |
| 8 | This schedule is sponsored by PNM Witness Gutierrez | | | | | | | |
| 9 | | | | | | | | |
| 10 | **Location** | **Location Number Note 2** | **FERC** | **Loc/FERC** | **FERC Description** | **Retirements** | **Removal Cost** | **Salvage** |
| 144 | **Solar Production** | | | | | | | |
| 237 | **All - Solar** | | | | | | | |
| 238 | | | 338.01 | | Land & Land Rights | - | - | - |
| 239 | | | 338.02 | | Structures and Improvements | - | - | - |
| 240 | | | 338.04 | | Solar Panels | - | - | - |
| 241 | | | 338.05 | | Collector System | - | - | - |
| 242 | | | 338.07 | | Solar Inverters | - | - | - |
| 243 | | | 338.08 | | Other Accessory Electrical Equipment | - | - | - |
| 244 | | | 338.09 | | Computer Hardware | - | - | - |
| 245 | | | 338.10 | | Computer Software | - | - | - |
| 246 | | | 338.11 | | Communication Equipment | - | - | - |
| 247 | | | 338.12 | | Misc. Power Plant Equipment | - | - | - |
| 248 | **Total Solar Production Gross Accumulated Reserve** | | | | | - | - | - |
| 249 | | | | | | | | |
| 250 | **Other Production** | | | | | | | |
| 251 | | | | | | | | |
| 252 | **Other Production - Gas:** | | | | | | | |
| 339 | **All - Gas** | | 340 | | Land and Land Rights | - | - | - |
| 340 | | | 340.1 | | Land - Right of Way | - | - | - |
| 341 | | | 341 | | Structures and Improvements | (453,948) | (55,895) | - |
| 342 | | | 342 | | Fuel Holders, Producers, Accessories | (95,004) | (1,406,896) | - |
| 343 | | | 343 | | Prime Movers | - | - | - |
| 344 | | | 344 | | Generators | (923,460) | (813,631) | - |
| 345 | | | 345 | | Accessory Electric Equipment | (407,052) | (46,843) | - |
| 346 | | | 345.01 | | Computer Hardware | (53,885) | - | - |
| 347 | | | 345.02 | | Computer Software | - | - | - |
| 348 | | | 345.03 | | Communication Equipment | - | - | - |
| 349 | | | 346 | | Misc Power Plant Equipment | (207,504) | (448,206) | - |
| 350 | | | 347 | | Asset Retirement Costs - Other Production | - | - | - |
| 351 | **Total Other Production Plant - Gas** | | | | | (2,140,853) | (2,771,471) | - |
| 352 | | | | | | | | |
| 353 | | | | | | | | |
| 354 | **Total Other Production Accumulated Reserve** | | | | | (2,140,853) | (2,771,471) | - |
| 355 | | | | | | | | |
| 356 | **Total Accumulated Reserve Production** | | | | | (9,176,261) | (4,713,072) | - |

| | A | B | C | D | E | R | S | T |
|---|---|---|---|---|---|---|---|---|
| 1 | **Public Service Company of New Mexico** | | | | | | | |
| 2 | **Schedule C-1** | | | | | | | |
| 3 | **Accumulated Provision for Depreciation and Amortization by Functional Classification** | | | | | | | |
| 4 | **Base Period Ending 6/30/2026** | | | | | | | |
| 5 | **Test Period Ending 9/30/2028** | | | | | | | |
| 6 | Link to WP Plant Lead Sheet | | | | | | | |
| 7 | **Base Period data is historical Information from the Company's Books and Records.** | | | | | | | |
| 8 | This schedule is sponsored by PNM Witness Gutierrez | | | | | | | |
| 9 | | | | | | | | |
| 10 | **Location** | **Location Number Note 2** | **FERC** | **Loc/FERC** | **FERC Description** | **Retirements** | **Removal Cost** | **Salvage** |
| 357 | | | | | | | | |
| 358 | | | | | | | | |
| 359 | **Accumulated Reserve Battery Storage Plant** | | | | | | | |
| 386 | **All - Energy Storage** | | 387.01 | 387.01 | Land & Land Rights | - | - | - |
| 387 | | | 387.02 | 387.02 | Structures & Improvements | - | - | - |
| 388 | | | 387.03 | 387.03 | Energy Storage Equipment | - | - | - |
| 389 | | | 387.05 | 387.05 | Collector System | - | - | - |
| 390 | | | 387.06 | 387.06 | Generator Step-Up Transformers (GSU) | - | - | - |
| 391 | | | 387.07 | 387.07 | Inverters | - | - | - |
| 392 | | | 387.08 | 387.08 | Computer Hardware | - | - | - |
| 393 | | | 387.09 | 387.09 | Computer Software | - | - | - |
| 394 | | | 387.10 | 387.10 | Communication Equipment | - | - | - |
| 395 | | | 387.11 | 387.11 | Misc. Energy Storage Equipment | - | - | - |
| 396 | | | 387.12 | 387.12 | Asset Retirement Costs for Energy Storage | - | - | - |
| 397 | **Total Accumulated Reserve Energy Storage Plant** | | | | | - | - | - |
| 398 | | | | | | | | |
| 399 | | | | | | | | |
| 400 | **Accumulated Reserve Transmission Plant** | | | | | | | |
| 453 | **All - Transmission** | | | | | | | |
| 454 | | | 350 | 350 | Land and Land Rights | - | (20,815) | |
| 455 | | | 350.1 | 350.1 | Land - Right of Way | - | - | |
| 456 | | | 351.01 | 351.01 | Computer Hardware | (1,632,273) | (65,354) | |
| 457 | | | 351.02 | 351.02 | Computer Software | - | - | |
| 458 | | | 351.03 | 351.03 | Communication Equipment | (610,837) | (151,416) | |
| 459 | | | 352 | 352 | Structures and Improvements | (202,848) | (659,348) | |
| 460 | | | 353 | 353 | Station Equipment | (2,959,416) | (1,726,174) | |
| 461 | | | 353.1 | 353.1 | Station Equipment - Step-up Xfmr and Aux | (46,320) | (21,671) | |
| 462 | | | 354 | 354 | Towers and Fixtures | (297,540) | (794) | |
| 463 | | | 355 | 355 | Poles and Fixtures | (1,398,804) | (289,355) | |
| 464 | | | 356 | 356 | Overhead Conductors and Devices | (200,748) | (195,429) | |
| 465 | | | 357 | 357 | Underground Conduit | - | (4,012) | |
| 466 | | | 359 | 359 | Roads and Trails | (1,152) | - | |
| 467 | **Total Accumulated Reserve Transmission Plant** | | | | | (7,349,938) | (3,134,369) | - |
| 468 | | | | | | | | |

| | A | B | C | D | E | R | S | T |
|---|---|---|---|---|---|---|---|---|
| 1 | **Public Service Company of New Mexico** | | | | | | | |
| 2 | **Schedule C-1** | | | | | | | |
| 3 | **Accumulated Provision for Depreciation and Amortization by Functional Classification** | | | | | | | |
| 4 | **Base Period Ending 6/30/2026** | | | | | | | |
| 5 | **Test Period Ending 9/30/2028** | | | | | | | |
| 6 | Link to WP Plant Lead Sheet | | | | | | | |
| 7 | **Base Period data is historical Information from the Company's Books and Records.** | | | | | | | |
| 8 | This schedule is sponsored by PNM Witness Gutierrez | | | | | | | |
| 9 | | | | | | | | |
| 10 | **Location** | **Location Number Note 2** | **FERC** | **Loc/FERC** | **FERC Description** | **Retirements** | **Removal Cost** | **Salvage** |
| 469 | | | | | | | | |
| 470 | | | | | | | | |
| 471 | **Accumulated Reserve Distribution Plant** | | | | | | | |
| 665 | **All - Distribution** | | | | | | | |
| 666 | | | 360 | | Land and Land Rights | - | (15,638) | - |
| 667 | | | 360.1 | | Land - Right of Way | - | (137,172) | - |
| 668 | | | 361 | | Structures and Improvements | (112,980) | (261,569) | - |
| 669 | | | 362 | | Station Equipment | (1,079,424) | (4,014,430) | - |
| 670 | | | 363.01 | | Computer Hardware | - | (399,761) | - |
| 671 | | | 363.02 | | Computer Software | - | (1,188,734) | - |
| 672 | | | 363.03 | | Communication Equipment | (60,348) | (1,069,911) | - |
| 673 | | | 364 | | Poles, Towers and Fixtures | (3,668,676) | (6,963,319) | - |
| 674 | | | 365 | | Overhead Conductors and Devices | (1,808,196) | (4,742,578) | - |
| 675 | | | 366 | | Underground Conduit | (562,464) | (2,088,293) | - |
| 676 | | | 367 | | Underground Conductors and Devices | (2,115,648) | (4,580,091) | - |
| 677 | | | 368 | | Line Transformers | (1,284,948) | (696,764) | - |
| 678 | | | 369 | | Services | (373,800) | (602,069) | - |
| 679 | | | 369.1 | | Services - Underground | (198,228) | (1,906,551) | - |
| 680 | | | 370 | | Meters | (3,085,526) | (327,065) | - |
| 681 | | | 370.4 | | Meters - Grid Mod | - | (2,377,469) | - |
| 682 | | | 371 | | Installations on Customers' Premises | - | - | - |
| 683 | | | 371.1 | | Leased Flood Lighting | - | - | - |
| 684 | | | 373 | | Street Lighting and Signal Systems | (260,688) | (499,795) | - |
| 685 | | | 374 | | Asset Retirement Costs - Distribution | - | - | - |
| 686 | **Total Accumulated Reserve Distribution Plant** | | | | | (14,610,926) | (31,871,211) | - |
| 687 | | | | | | | | |

| | A | B | C | D | E | R | S | T |
|---|---|---|---|---|---|---|---|---|
| 1 | **Public Service Company of New Mexico** | | | | | | | |
| 2 | **Schedule C-1** | | | | | | | |
| 3 | **Accumulated Provision for Depreciation and Amortization by Functional Classification** | | | | | | | |
| 4 | **Base Period Ending 6/30/2026** | | | | | | | |
| 5 | **Test Period Ending 9/30/2028** | | | | | | | |
| 6 | Link to WP Plant Lead Sheet | | | | | | | |
| 7 | **Base Period data is historical Information from the Company's Books and Records.** | | | | | | | |
| 8 | This schedule is sponsored by PNM Witness Gutierrez | | | | | | | |
| 9 | | | | | | | | |
| 10 | **Location** | **Location Number Note 2** | **FERC** | **Loc/FERC** | **FERC Description** | **Retirements** | **Removal Cost** | **Salvage** |
| 689 | **Accumulated Reserve G&I Plant (303,389-399)** | | | | | | | |
| 719 | **Total General & Intangible Plant** | | | | | | | |
| 720 | | | 303 | 303 | Miscellaneous Intangible Plant | - | - | - |
| 721 | | | 389 | 389 | Land and Land Rights | - | - | - |
| 722 | | | 390 | 390 | Structures and Improvements | (384,996) | (223,889) | - |
| 723 | | | 390.1 | 390.1 | Bulk Power Office Building Remodeling | (25,932) | - | - |
| 724 | | | 390.2 | 390.2 | Bulk Power Office Building | - | - | - |
| 725 | | | 391 | 391 | Office Furniture and Equipment | (71,589) | (3,513) | - |
| 726 | | | 391.1 | 391.1 | Office Furniture and Equipment - PC System | - | - | - |
| 727 | | | 391.2 | 391.2 | Office Furniture and Equipment - PC's | - | - | - |
| 728 | | | 391.3 | 391.3 | Computer Hardware | - | - | - |
| 729 | | | 391.5 | 391.5 | Computer Hardware - Solar | - | - | - |
| 730 | | | 391.7 | 391.7 | Computer Hardware | - | - | - |
| 731 | | | 392 | 392 | Transportation Equipment - Light | (33,828) | (22,384) | - |
| 732 | | | 392.1 | 392.1 | Transportation Equipment - Heavy | (258,996) | (6,860) | - |
| 733 | | | 392.2 | 392.2 | Transportation Equipment - Trailers | (3,288) | (2,860) | - |
| 734 | | | 392.4 | 392.4 | Transportation Equipment - Leaseback | - | - | - |
| 735 | | | 393 | 393 | Stores Equipment | - | - | - |
| 736 | | | 394 | 394 | Tools, Shop & Garage Equipment | (561,029) | (49,928) | - |
| 737 | | | 395 | 395 | Laboratory Equipment | - | - | - |
| 738 | | | 396 | 396 | Power Operated Equipment | (3,240) | (3,985) | - |
| 739 | | | 397.01 | 397.01 | Computer Hardware | (1,530,853) | - | - |
| 740 | | | 397.02 | 397.02 | Computer Software | - | - | - |
| 741 | | | 397.03 | 397.03 | Communication Equipment | - | - | - |
| 742 | | | 398 | 398 | Miscellaneous Equipment | (30,004) | (5,550) | - |
| 743 | | | 399.1 | 399.1 | ARO General Plant-1 | - | - | - |
| 744 | **Total Accumulated Reserve G&I Plant - PNM** | | | | | (2,903,755) | (318,967) | - |
| 745 | | | | | | | | |
| 746 | **Total Electric Plant In Service** | | 101/106 | | | (34,040,880) | (40,037,618) | - |
| 747 | | | | | | | | |
| 748 | **Electric Plant Purchased** | | 102 | | | | | |
| 749 | | | | | | | | |
| 750 | **Electric Plant Acquisition Adjustment** | | | | Acq. Adj. - Palo Verde Unit 1&2 (Drexel) | | | |
| 751 | | | | | Acq. Adj. - Palo Verde Unit 2 (First Chicago) | - | - | |
| 752 | | | | | Acq. Adj. - (EIP) | - | - | |
| 753 | **Electric Plant Acquisition Adjustment** | | 114 | | | - | - | - |
| 754 | | | | | | | | |
| 755 | **Total Electric Plant** | | | | | (34,040,880) | (40,037,618) | - |
| 756 | | | | | | | | |

| | A | B | C | D | E | R | S | T |
|---|---|---|---|---|---|---|---|---|
| 1 | **Public Service Company of New Mexico** | | | | | | | |
| 2 | **Schedule C-1** | | | | | | | |
| 3 | **Accumulated Provision for Depreciation and Amortization by Functional Classification** | | | | | | | |
| 4 | **Base Period Ending 6/30/2026** | | | | | | | |
| 5 | **Test Period Ending 9/30/2028** | | | | | | | |
| 6 | Link to WP Plant Lead Sheet | | | | | | | |
| 7 | **Base Period data is historical Information from the Company's Books and Records.** | | | | | | | |
| 8 | This schedule is sponsored by PNM Witness Gutierrez | | | | | | | |
| 9 | | | | | | | | |
| 10 | **Location** | **Location Number Note 2** | **FERC** | **Loc/FERC** | **FERC Description** | **Retirements** | **Removal Cost** | **Salvage** |
| 757 | | | | | | | | |
| 758 | **Corporate Unallocated** | 900 | 303 | 900303 | Miscellaneous Intangible Plant | - | | |
| 759 | | 900 | 389 | 900389 | Land and Land Rights | - | | |
| 760 | | 900 | 390 | 900390 | Structures and Improvements | (544,032) | (356,306) | |
| 761 | | 900 | 390.1 | 900390.1 | Bulk Power Office Building Remodeling | - | | |
| 762 | | 900 | 390.2 | 900390.2 | Bulk Power Office Building | - | | |
| 763 | | 900 | 391 | 900391 | Office Furniture and Equipment | - | (7,423) | |
| 764 | | 900 | 391.1 | 900391.1 | Office Furniture and Equipment - PC System | - | | |
| 765 | | 900 | 391.2 | 900391.2 | Office Furniture and Equipment - PC's | - | | |
| 766 | | 900 | 391.3 | 900391.3 | Computer Hardware | - | | |
| 767 | | 900 | 391.5 | 900391.5 | Computer Hardware - Solar | - | | |
| 768 | | 900 | 391.7 | 900391.7 | Computer Hardware | - | | |
| 769 | | 900 | 392 | 900392 | Transportation Equipment - Light | - | | |
| 770 | | 900 | 392.1 | 900392.1 | Transportation Equipment - Heavy | - | | |
| 771 | | 900 | 392.2 | 900392.2 | Transportation Equipment - Trailers | (181,424) | | |
| 772 | | 900 | 392.4 | 900392.4 | Transportation Equipment - Leaseback | (144) | | |
| 773 | | 900 | 393 | 900393 | Stores Equipment | - | | |
| 774 | | 900 | 394 | 900394 | Tools, Shop & Garage Equipment | - | | |
| 775 | | 900 | 395 | 900395 | Laboratory Equipment | - | | |
| 776 | | 900 | 396 | 900396 | Power Operated Equipment | - | | |
| 777 | | 900 | 397 | 900397 | Communication Equipment | - | | |
| 778 | | 900 | 397.01 | 900397.01 | Computer Hardware | (12,803,231) | (7,423) | |
| 779 | | 900 | 397.02 | 900397.02 | Computer Software | - | - | |
| 780 | | 900 | 397.03 | 900397.03 | Communication Equipment | (1,329,066) | - | |
| 781 | | 900 | 397.2 | 900397.2 | Communication Equipment | - | - | |
| 782 | | 900 | 397.3 | 900397.3 | Communication Equipment | - | - | |
| 783 | | 900 | 398 | 900398 | Miscellaneous Equipment | - | - | |
| 784 | | 900 | 399.1 | 900399.1 | ARO General Plant-1 | - | - | |
| 785 | | | | | | | | |
| 786 | **Total Accumulated Reserve Corporate Plant** | | | | | (14,857,896) | (371,153) | - |
| 787 | | | | | | | | |
| 788 | **Total Electric Plant In Service - with corporate** | | 101/106 | | | (48,898,776) | (40,408,771) | - |
| 789 | | | | | | | | |
| 790 | **Electric Plant Purchased - with Corporate** | | 102 | | | | | |
| 791 | | | | | | | | |
| 792 | **Electric Plant Acq. Adj. - with Corporate** | | 114 | | | - | - | - |
| 793 | | | | | | | | |
| 794 | **Total Electric Plant - with Corporate** | | | | | (48,898,776) | (40,408,771) | - |

| | A | B | C | D | E | U | V | W |
|---|---|---|---|---|---|---|---|---|
| 1 | **Public Service Company of New Mexico** | | | | | | | |
| 2 | **Schedule C-1** | | | | | | | |
| 3 | **Accumulated Provision for Depreciation and Amortization by Functional Classification** | | | | | | | |
| 4 | **Base Period Ending 6/30/2026** | | | | | | | |
| 5 | **Test Period Ending 9/30/2028** | | | | | | | |
| 6 | Link to WP Plant Lead Sheet | | | | | | | |
| 7 | **Base Period data is historical Information from the Company's Books and Records.** | | | | | | | |
| 8 | This schedule is sponsored by PNM Witness Gutierrez | | | | | | | |
| 9 | | | | | | | | |
| 10 | **Location** | **Location Number Note 2** | **FERC** | **Loc/FERC** | **FERC Description** | **Other DR/CR** | **Linkage 1 Ending Balance 6/30/2027** | **Linkage 1 Adjustments** |
| 11 | | | | | | | | |
| 12 | **Production Plant** | | | | | | | |
| 13 | **Steam Production** | | | | | | | |
| 56 | **All - Steam** | | | | | | | |
| 57 | | | 310 | | Land and Land Rights | - | - | - |
| 58 | | | 310.1 | | Land Right of Way | - | 18,629 | - |
| 59 | | | 311 | | Structures & Improvements | - | 7,871,874 | - |
| 60 | | | 312 | | Boiler Plant Equipment | - | 94,235,173 | - |
| 61 | | | 314 | | Turbogenerator Units | - | 39,123,538 | - |
| 62 | | | 315 | | Accessory Electric Equipment | - | 10,691,716 | - |
| 63 | | | 315.01 | | Computer Hardware | - | - | - |
| 64 | | | 315.02 | | Computer Software | - | 827,198 | - |
| 65 | | | 315.03 | | Communication Equipment | - | 215,013 | - |
| 66 | | | 316 | | Misc Power Plant Equipment | - | 6,062,255 | - |
| 67 | | | 317 | | Asset Retirement Costs - Steam | - | 3,664,792 | - |
| 68 | **Total Steam Production Accumulated Reserve** | | | | | - | 162,710,188 | - |
| 69 | | | | | | | | |
| 70 | | | | | | | | |
| 71 | **Nuclear Production** | | | | | | | |
| 129 | **All - Nuclear** | | | | | | | |
| 130 | | | 320 | | Land and Land Rights | - | 0 | - |
| 131 | | | 320.1 | | Land - Right of Way | - | 30,601 | - |
| 132 | | | 321 | | Structures and Improvements | - | 116,172,192 | - |
| 133 | | | 322 | | Reactor Plant Equipment | - | 182,641,403 | - |
| 134 | | | 323 | | Turbogenerator Units | - | 63,733,637 | - |
| 135 | | | 324 | | Accessory Electric Equipment | - | 44,404,596 | - |
| 136 | | | 324.01 | | Computer Hardware | - | - | - |
| 137 | | | 324.02 | | Computer Software | - | 5,551,371 | - |
| 138 | | | 324.03 | | Communication Equipment | - | 217,188 | - |
| 139 | | | 325 | | Misc Power Plant Equipment | - | 40,053,483 | - |
| 140 | | | 326 | | Asset Retirement Costs Nuclear Prod Plant | - | 134,219 | - |
| 141 | **Total Nuclear Production Gross Accumulated Reserve** | | | | | - | 452,938,691 | - |
| 142 | | | | | | | | |
| 143 | | | | | | | | |

| | A | B | C | D | E | U | V | W |
|---|---|---|---|---|---|---|---|---|
| 1 | **Public Service Company of New Mexico** | | | | | | | |
| 2 | **Schedule C-1** | | | | | | | |
| 3 | **Accumulated Provision for Depreciation and Amortization by Functional Classification** | | | | | | | |
| 4 | **Base Period Ending 6/30/2026** | | | | | | | |
| 5 | **Test Period Ending 9/30/2028** | | | | | | | |
| 6 | Link to WP Plant Lead Sheet | | | | | | | |
| 7 | **Base Period data is historical Information from the Company's Books and Records.** | | | | | | | |
| 8 | This schedule is sponsored by PNM Witness Gutierrez | | | | | | | |
| 9 | | | | | | | | |
| 10 | **Location** | **Location Number Note 2** | **FERC** | **Loc/FERC** | **FERC Description** | **Other DR/CR** | **Linkage 1 Ending Balance 6/30/2027** | **Linkage 1 Adjustments** |
| 144 | **Solar Production** | | | | | | | |
| 237 | **All - Solar** | | | | | | | |
| 238 | | | 338.01 | | Land & Land Rights | - | - | - |
| 239 | | | 338.02 | | Structures and Improvements | - | 121,771 | - |
| 240 | | | 338.04 | | Solar Panels | - | 117,247,487 | - |
| 241 | | | 338.05 | | Collector System | - | 2,424,948 | - |
| 242 | | | 338.07 | | Solar Inverters | - | 218,400 | - |
| 243 | | | 338.08 | | Other Accessory Electrical Equipment | - | 12,730,693 | - |
| 244 | | | 338.09 | | Computer Hardware | - | 22,429 | - |
| 245 | | | 338.10 | | Computer Software | - | - | - |
| 246 | | | 338.11 | | Communication Equipment | - | 244,780 | - |
| 247 | | | 338.12 | | Misc. Power Plant Equipment | - | 1,993,328 | - |
| 248 | **Total Solar Production Gross Accumulated Reserve** | | | | | - | 135,003,837 | - |
| 249 | | | | | | | | |
| 250 | **Other Production** | | | | | | | |
| 251 | | | | | | | | |
| 252 | **Other Production - Gas:** | | | | | | | |
| 339 | **All - Gas** | | 340 | | Land and Land Rights | - | - | - |
| 340 | | | 340.1 | | Land - Right of Way | - | 820,322 | - |
| 341 | | | 341 | | Structures and Improvements | - | 44,617,305 | - |
| 342 | | | 342 | | Fuel Holders, Producers, Accessories | - | 59,884,043 | - |
| 343 | | | 343 | | Prime Movers | - | - | - |
| 344 | | | 344 | | Generators | - | 102,242,095 | - |
| 345 | | | 345 | | Accessory Electric Equipment | - | 9,110,928 | - |
| 346 | | | 345.01 | | Computer Hardware | - | (4,487) | - |
| 347 | | | 345.02 | | Computer Software | - | 54,432 | - |
| 348 | | | 345.03 | | Communication Equipment | - | 7,931 | - |
| 349 | | | 346 | | Misc Power Plant Equipment | - | 11,594,781 | - |
| 350 | | | 347 | | Asset Retirement Costs - Other Production | - | 1,480,058 | - |
| 351 | **Total Other Production Plant - Gas** | | | | | - | 229,807,407 | - |
| 352 | | | | | | | | |
| 353 | | | | | | | | |
| 354 | **Total Other Production Accumulated Reserve** | | | | | - | 229,807,407 | - |
| 355 | | | | | | | | |
| 356 | **Total Accumulated Reserve Production** | | | | | - | 980,460,124 | - |

| | A | B | C | D | E | U | V | W |
|---|---|---|---|---|---|---|---|---|
| 1 | **Public Service Company of New Mexico** | | | | | | | |
| 2 | **Schedule C-1** | | | | | | | |
| 3 | **Accumulated Provision for Depreciation and Amortization by Functional Classification** | | | | | | | |
| 4 | **Base Period Ending 6/30/2026** | | | | | | | |
| 5 | **Test Period Ending 9/30/2028** | | | | | | | |
| 6 | Link to WP Plant Lead Sheet | | | | | | | |
| 7 | **Base Period data is historical Information from the Company's Books and Records.** | | | | | | | |
| 8 | This schedule is sponsored by PNM Witness Gutierrez | | | | | | | |
| 9 | | | | | | | | |
| 10 | **Location** | **Location Number Note 2** | **FERC** | **Loc/FERC** | **FERC Description** | **Other DR/CR** | **Linkage 1 Ending Balance 6/30/2027** | **Linkage 1 Adjustments** |
| 357 | | | | | | | | |
| 358 | | | | | | | | |
| 359 | **Accumulated Reserve Battery Storage Plant** | | | | | | | |
| 386 | **All - Energy Storage** | | 387.01 | 387.01 | Land & Land Rights | - | - | - |
| 387 | | | 387.02 | 387.02 | Structures & Improvements | - | 743,542 | - |
| 388 | | | 387.03 | 387.03 | Energy Storage Equipment | - | 5,930,223 | - |
| 389 | | | 387.05 | 387.05 | Collector System | - | 980,708 | - |
| 390 | | | 387.06 | 387.06 | Generator Step-Up Transformers (GSU) | - | 1,898,118 | - |
| 391 | | | 387.07 | 387.07 | Inverters | - | - | - |
| 392 | | | 387.08 | 387.08 | Computer Hardware | - | 1,069,628 | - |
| 393 | | | 387.09 | 387.09 | Computer Software | - | 402,428 | - |
| 394 | | | 387.10 | 387.10 | Communication Equipment | - | 59,315 | - |
| 395 | | | 387.11 | 387.11 | Misc. Energy Storage Equipment | - | 2,020,598 | - |
| 396 | | | 387.12 | 387.12 | Asset Retirement Costs for Energy Storage | - | - | - |
| 397 | **Total Accumulated Reserve Energy Storage Plant** | | | | | - | 13,104,559 | - |
| 398 | | | | | | | | |
| 399 | | | | | | | | |
| 400 | **Accumulated Reserve Transmission Plant** | | | | | | | |
| 453 | **All - Transmission** | | | | | | | |
| 454 | | | 350 | 350 | Land and Land Rights | - | 6,188,867 | |
| 455 | | | 350.1 | 350.1 | Land - Right of Way | - | 26,384,330 | |
| 456 | | | 351.01 | 351.01 | Computer Hardware | - | 6,329,002 | |
| 457 | | | 351.02 | 351.02 | Computer Software | - | 6,110,246 | |
| 458 | | | 351.03 | 351.03 | Communication Equipment | - | 18,838,430 | |
| 459 | | | 352 | 352 | Structures and Improvements | - | 28,914,618 | |
| 460 | | | 353 | 353 | Station Equipment | - | 254,345,790 | |
| 461 | | | 353.1 | 353.1 | Station Equipment - Step-up Xfmr and Aux | - | 6,944,238 | |
| 462 | | | 354 | 354 | Towers and Fixtures | - | 48,574,796 | |
| 463 | | | 355 | 355 | Poles and Fixtures | - | 155,243,207 | |
| 464 | | | 356 | 356 | Overhead Conductors and Devices | - | 107,054,186 | |
| 465 | | | 357 | 357 | Underground Conduit | - | 10,365 | |
| 466 | | | 359 | 359 | Roads and Trails | - | 3,213,805 | |
| 467 | **Total Accumulated Reserve Transmission Plant** | | | | | - | 668,151,880 | - |
| 468 | | | | | | | | |

| | A | B | C | D | E | U | V | W |
|---|---|---|---|---|---|---|---|---|
| 1 | **Public Service Company of New Mexico** | | | | | | | |
| 2 | **Schedule C-1** | | | | | | | |
| 3 | **Accumulated Provision for Depreciation and Amortization by Functional Classification** | | | | | | | |
| 4 | **Base Period Ending 6/30/2026** | | | | | | | |
| 5 | **Test Period Ending 9/30/2028** | | | | | | | |
| 6 | Link to WP Plant Lead Sheet | | | | | | | |
| 7 | **Base Period data is historical Information from the Company's Books and Records.** | | | | | | | |
| 8 | This schedule is sponsored by PNM Witness Gutierrez | | | | | | | |
| 9 | | | | | | | | |
| 10 | **Location** | **Location Number Note 2** | **FERC** | **Loc/FERC** | **FERC Description** | **Other DR/CR** | **Linkage 1 Ending Balance 6/30/2027** | **Linkage 1 Adjustments** |
| 469 | | | | | | | | |
| 470 | | | | | | | | |
| 471 | **Accumulated Reserve Distribution Plant** | | | | | | | |
| 665 | **All - Distribution** | | | | | | | |
| 666 | | | 360 | | Land and Land Rights | - | 240,066 | |
| 667 | | | 360.1 | | Land - Right of Way | - | 1,142,015 | |
| 668 | | | 361 | | Structures and Improvements | - | 13,304,285 | |
| 669 | | | 362 | | Station Equipment | - | 112,592,801 | |
| 670 | | | 363.01 | | Computer Hardware | - | 3,893,628 | |
| 671 | | | 363.02 | | Computer Software | - | 24,449,676 | |
| 672 | | | 363.03 | | Communication Equipment | - | 7,587,284 | |
| 673 | | | 364 | | Poles, Towers and Fixtures | - | 108,228,326 | |
| 674 | | | 365 | | Overhead Conductors and Devices | - | 120,505,547 | |
| 675 | | | 366 | | Underground Conduit | - | 76,258,204 | |
| 676 | | | 367 | | Underground Conductors and Devices | - | 152,459,057 | |
| 677 | | | 368 | | Line Transformers | - | 131,187,294 | |
| 678 | | | 369 | | Services | - | 55,507,061 | |
| 679 | | | 369.1 | | Services - Underground | - | 89,023,179 | |
| 680 | | | 370 | | Meters | - | 12,594,527 | |
| 681 | | | 370.4 | | Meters - Grid Mod | - | (1,516,144) | |
| 682 | | | 371 | | Installations on Customers' Premises | - | 8,803,176 | |
| 683 | | | 371.1 | | Leased Flood Lighting | - | 273,888 | |
| 684 | | | 373 | | Street Lighting and Signal Systems | - | 13,311,188 | |
| 685 | | | 374 | | Asset Retirement Costs - Distribution | - | 0 | |
| 686 | **Total Accumulated Reserve Distribution Plant** | | | | | - | 929,845,055 | - |
| 687 | | | | | | | | |

| | A | B | C | D | E | U | V | W |
|---|---|---|---|---|---|---|---|---|
| 1 | **Public Service Company of New Mexico** | | | | | | | |
| 2 | **Schedule C-1** | | | | | | | |
| 3 | **Accumulated Provision for Depreciation and Amortization by Functional Classification** | | | | | | | |
| 4 | **Base Period Ending 6/30/2026** | | | | | | | |
| 5 | **Test Period Ending 9/30/2028** | | | | | | | |
| 6 | Link to WP Plant Lead Sheet | | | | | | | |
| 7 | **Base Period data is historical Information from the Company's Books and Records.** | | | | | | | |
| 8 | This schedule is sponsored by PNM Witness Gutierrez | | | | | | | |
| 9 | | | | | | | | |
| 10 | **Location** | **Location Number Note 2** | **FERC** | **Loc/FERC** | **FERC Description** | **Other DR/CR** | **Linkage 1 Ending Balance 6/30/2027** | **Linkage 1 Adjustments** |
| 689 | **Accumulated Reserve G&I Plant (303,389-399)** | | | | | | | |
| 719 | **Total General & Intangible Plant** | | | | | | | |
| 720 | | | 303 | 303 | Miscellaneous Intangible Plant | - | - | - |
| 721 | | | 389 | 389 | Land and Land Rights | - | - | - |
| 722 | | | 390 | 390 | Structures and Improvements | - | 30,539,507 | - |
| 723 | | | 390.1 | 390.1 | Bulk Power Office Building Remodeling | - | 5,710,672 | - |
| 724 | | | 390.2 | 390.2 | Bulk Power Office Building | - | 5,846,125 | - |
| 725 | | | 391 | 391 | Office Furniture and Equipment | - | 2,908,795 | - |
| 726 | | | 391.1 | 391.1 | Office Furniture and Equipment - PC System | - | - | - |
| 727 | | | 391.2 | 391.2 | Office Furniture and Equipment - PC's | - | - | - |
| 728 | | | 391.3 | 391.3 | Computer Hardware | - | - | - |
| 729 | | | 391.5 | 391.5 | Computer Hardware - Solar | - | - | - |
| 730 | | | 391.7 | 391.7 | Computer Hardware | - | - | - |
| 731 | | | 392 | 392 | Transportation Equipment - Light | - | 2,270,664 | - |
| 732 | | | 392.1 | 392.1 | Transportation Equipment - Heavy | - | 3,490,047 | - |
| 733 | | | 392.2 | 392.2 | Transportation Equipment - Trailers | - | 3,726,896 | - |
| 734 | | | 392.4 | 392.4 | Transportation Equipment - Leaseback | - | - | - |
| 735 | | | 393 | 393 | Stores Equipment | - | 88,329 | - |
| 736 | | | 394 | 394 | Tools, Shop & Garage Equipment | - | 9,327,445 | - |
| 737 | | | 395 | 395 | Laboratory Equipment | - | 141,117 | - |
| 738 | | | 396 | 396 | Power Operated Equipment | - | 4,307,381 | - |
| 739 | | | 397.01 | 397.01 | Computer Hardware | - | 445,206 | - |
| 740 | | | 397.02 | 397.02 | Computer Software | - | 24,485,595 | - |
| 741 | | | 397.03 | 397.03 | Communication Equipment | - | - | - |
| 742 | | | 398 | 398 | Miscellaneous Equipment | - | 1,245,759 | - |
| 743 | | | 399.1 | 399.1 | ARO General Plant-1 | - | 16,815 | - |
| 744 | **Total Accumulated Reserve G&I Plant - PNM** | | | | | - | 94,550,355 | - |
| 745 | | | | | | | | |
| 746 | **Total Electric Plant In Service** | | 101/106 | | | - | 2,686,111,973 | - |
| 747 | | | | | | | | |
| 748 | **Electric Plant Purchased** | | 102 | | | | | |
| 749 | | | | | | | | |
| 750 | **Electric Plant Acquisition Adjustment** | | | | Acq. Adj. - Palo Verde Unit 1&2 (Drexel) | | | |
| 751 | | | | | Acq. Adj. - Palo Verde Unit 2 (First Chicago) | | 832,053 | |
| 752 | | | | | Acq. Adj. - (EIP) | | - | |
| 753 | **Electric Plant Acquisition Adjustment** | | 114 | | | - | 832,053 | - |
| 754 | | | | | | | | |
| 755 | **Total Electric Plant** | | | | | - | 2,686,944,026 | - |
| 756 | | | | | | | | |

| | A | B | C | D | E | U | V | W |
|---|---|---|---|---|---|---|---|---|
| 1 | **Public Service Company of New Mexico** | | | | | | | |
| 2 | **Schedule C-1** | | | | | | | |
| 3 | **Accumulated Provision for Depreciation and Amortization by Functional Classification** | | | | | | | |
| 4 | **Base Period Ending 6/30/2026** | | | | | | | |
| 5 | **Test Period Ending 9/30/2028** | | | | | | | |
| 6 | Link to WP Plant Lead Sheet | | | | | | | |
| 7 | **Base Period data is historical Information from the Company's Books and Records.** | | | | | | | |
| 8 | This schedule is sponsored by PNM Witness Gutierrez | | | | | | | |
| 9 | | | | | | | | |
| 10 | **Location** | **Location Number Note 2** | **FERC** | **Loc/FERC** | **FERC Description** | **Other DR/CR** | **Linkage 1 Ending Balance 6/30/2027** | **Linkage 1 Adjustments** |
| 757 | | | | | | | | |
| 758 | **Corporate Unallocated** | 900 | 303 | 900303 | Miscellaneous Intangible Plant | | - | |
| 759 | | 900 | 389 | 900389 | Land and Land Rights | | (66,097) | |
| 760 | | 900 | 390 | 900390 | Structures and Improvements | | 23,883,687 | |
| 761 | | 900 | 390.1 | 900390.1 | Bulk Power Office Building Remodeling | | - | |
| 762 | | 900 | 390.2 | 900390.2 | Bulk Power Office Building | | - | |
| 763 | | 900 | 391 | 900391 | Office Furniture and Equipment | | 376,033 | |
| 764 | | 900 | 391.1 | 900391.1 | Office Furniture and Equipment - PC System | | - | |
| 765 | | 900 | 391.2 | 900391.2 | Office Furniture and Equipment - PC's | | - | |
| 766 | | 900 | 391.3 | 900391.3 | Computer Hardware | | - | |
| 767 | | 900 | 391.5 | 900391.5 | Computer Hardware - Solar | | - | |
| 768 | | 900 | 391.7 | 900391.7 | Computer Hardware | | - | |
| 769 | | 900 | 392 | 900392 | Transportation Equipment - Light | | 160,102 | |
| 770 | | 900 | 392.1 | 900392.1 | Transportation Equipment - Heavy | | 16,716 | |
| 771 | | 900 | 392.2 | 900392.2 | Transportation Equipment - Trailers | | (174,163) | |
| 772 | | 900 | 392.4 | 900392.4 | Transportation Equipment - Leaseback | | (147) | |
| 773 | | 900 | 393 | 900393 | Stores Equipment | | - | |
| 774 | | 900 | 394 | 900394 | Tools, Shop & Garage Equipment | | 336,403 | |
| 775 | | 900 | 395 | 900395 | Laboratory Equipment | | - | |
| 776 | | 900 | 396 | 900396 | Power Operated Equipment | | 21,968 | |
| 777 | | 900 | 397 | 900397 | Communication Equipment | | - | |
| 778 | | 900 | 397.01 | 900397.01 | Computer Hardware | | 13,459,042 | |
| 779 | | 900 | 397.02 | 900397.02 | Computer Software | | 147,010,184 | |
| 780 | | 900 | 397.03 | 900397.03 | Communication Equipment | | 3,236,078 | |
| 781 | | 900 | 397.2 | 900397.2 | Communication Equipment | | - | |
| 782 | | 900 | 397.3 | 900397.3 | Communication Equipment | | - | |
| 783 | | 900 | 398 | 900398 | Miscellaneous Equipment | | - | |
| 784 | | 900 | 399.1 | 900399.1 | ARO General Plant-1 | | - | |
| 785 | | | | | | | | |
| 786 | **Total Accumulated Reserve Corporate Plant** | | | | | - | 188,259,807 | - |
| 787 | | | | | | | | |
| 788 | **Total Electric Plant In Service - with corporate** | | 101/106 | | | - | 2,874,371,779 | - |
| 789 | | | | | | | | |
| 790 | **Electric Plant Purchased - with Corporate** | | 102 | | | | | |
| 791 | | | | | | | | |
| 792 | **Electric Plant Acq. Adj. - with Corporate** | | 114 | | | - | 832,053 | - |
| 793 | | | | | | | | |
| 794 | **Total Electric Plant - with Corporate** | | | | | - | 2,875,203,832 | - |

| | A | B | C | D | E | X | Y | Z |
|---|---|---|---|---|---|---|---|---|
| 1 | **Public Service Company of New Mexico** | | | | | | | |
| 2 | **Schedule C-1** | | | | | | | |
| 3 | **Accumulated Provision for Depreciation and Amortization by Functional Classification** | | | | | | | |
| 4 | **Base Period Ending 6/30/2026** | | | | | | | |
| 5 | **Test Period Ending 9/30/2028** | | | | | | | |
| 6 | Link to WP Plant Lead Sheet | | | | | | | |
| 7 | **Base Period data is historical Information from the Company's Books and Records.** | | | | | | | |
| 8 | This schedule is sponsored by PNM Witness Gutierrez | | | | | | | |
| 9 | | | | | | | | **WP C1a, Column AB** |
| 10 | **Location** | **Location Number Note 2** | **FERC** | **Loc/FERC** | **FERC Description** | **Adjusted Linkage 1 Ending Balance 6/30/2027** | **Reference** | **Linkage 2 Beginning Balance 10/1/2026** |
| 11 | | | | | | | | |
| 12 | **Production Plant** | | | | | | | |
| 13 | **Steam Production** | | | | | | | |
| 56 | **All - Steam** | | | | | | | |
| 57 | | | 310 | | Land and Land Rights | - | | - |
| 58 | | | 310.1 | | Land Right of Way | 18,629 | | 18,354 |
| 59 | | | 311 | | Structures & Improvements | 7,871,874 | | 7,783,560 |
| 60 | | | 312 | | Boiler Plant Equipment | 94,235,173 | | 93,377,307 |
| 61 | | | 314 | | Turbogenerator Units | 39,123,538 | | 37,578,825 |
| 62 | | | 315 | | Accessory Electric Equipment | 10,691,716 | | 10,294,319 |
| 63 | | | 315.01 | | Computer Hardware | - | | - |
| 64 | | | 315.02 | | Computer Software | 827,198 | | 663,622 |
| 65 | | | 315.03 | | Communication Equipment | 215,013 | | 198,311 |
| 66 | | | 316 | | Misc Power Plant Equipment | 6,062,255 | | 5,781,893 |
| 67 | | | 317 | | Asset Retirement Costs - Steam | 3,664,792 | | 3,750,203 |
| 68 | **Total Steam Production Accumulated Reserve** | | | | | 162,710,188 | | 159,446,393 |
| 69 | | | | | | | | |
| 70 | | | | | | | | |
| 71 | **Nuclear Production** | | | | | | | |
| 129 | **All - Nuclear** | | | | | | | |
| 130 | | | 320 | | Land and Land Rights | 0 | | 0 |
| 131 | | | 320.1 | | Land - Right of Way | 30,601 | | 30,100 |
| 132 | | | 321 | | Structures and Improvements | 116,172,192 | | 112,453,415 |
| 133 | | | 322 | | Reactor Plant Equipment | 182,641,403 | | 176,438,099 |
| 134 | | | 323 | | Turbogenerator Units | 63,733,637 | | 61,491,163 |
| 135 | | | 324 | | Accessory Electric Equipment | 44,404,596 | | 43,476,705 |
| 136 | | | 324.01 | | Computer Hardware | - | | - |
| 137 | | | 324.02 | | Computer Software | 5,551,371 | | 3,991,603 |
| 138 | | | 324.03 | | Communication Equipment | 217,188 | | 200,429 |
| 139 | | | 325 | | Misc Power Plant Equipment | 40,053,483 | | 38,631,777 |
| 140 | | | 326 | | Asset Retirement Costs Nuclear Prod Plant | 134,219 | | 33,555 |
| 141 | **Total Nuclear Production Gross Accumulated Reserve** | | | | | 452,938,691 | | 436,746,846 |
| 142 | | | | | | | | |
| 143 | | | | | | | | |

| | A | B | C | D | E | X | Y | Z |
|---|---|---|---|---|---|---|---|---|
| 1 | **Public Service Company of New Mexico** | | | | | | | |
| 2 | **Schedule C-1** | | | | | | | |
| 3 | **Accumulated Provision for Depreciation and Amortization by Functional Classification** | | | | | | | |
| 4 | **Base Period Ending 6/30/2026** | | | | | | | |
| 5 | **Test Period Ending 9/30/2028** | | | | | | | |
| 6 | Link to WP Plant Lead Sheet | | | | | | | |
| 7 | **Base Period data is historical Information from the Company's Books and Records.** | | | | | | | |
| 8 | This schedule is sponsored by PNM Witness Gutierrez | | | | | | | |
| 9 | | | | | | | | **WP C1a, Column AB** |
| 10 | **Location** | **Location Number Note 2** | **FERC** | **Loc/FERC** | **FERC Description** | **Adjusted Linkage 1 Ending Balance 6/30/2027** | **Reference** | **Linkage 2 Beginning Balance 10/1/2026** |
| 144 | **Solar Production** | | | | | | | |
| 237 | **All - Solar** | | | | | | | |
| 238 | | | 338.01 | | Land & Land Rights | - | | - |
| 239 | | | 338.02 | | Structures and Improvements | 121,771 | | 114,921 |
| 240 | | | 338.04 | | Solar Panels | 117,247,487 | | 110,298,715 |
| 241 | | | 338.05 | | Collector System | 2,424,948 | | 2,167,408 |
| 242 | | | 338.07 | | Solar Inverters | 218,400 | | 21,840 |
| 243 | | | 338.08 | | Other Accessory Electrical Equipment | 12,730,693 | | 12,131,953 |
| 244 | | | 338.09 | | Computer Hardware | 22,429 | | 14,665 |
| 245 | | | 338.10 | | Computer Software | - | | - |
| 246 | | | 338.11 | | Communication Equipment | 244,780 | | 183,849 |
| 247 | | | 338.12 | | Misc. Power Plant Equipment | 1,993,328 | | 1,897,404 |
| 248 | **Total Solar Production Gross Accumulated Reserve** | | | | | 135,003,837 | | 126,830,755 |
| 249 | | | | | | | | |
| 250 | **Other Production** | | | | | | | |
| 251 | | | | | | | | |
| 252 | **Other Production - Gas:** | | | | | | | |
| 339 | **All - Gas** | | 340 | | Land and Land Rights | - | | - |
| 340 | | | 340.1 | | Land - Right of Way | 820,322 | | 767,353 |
| 341 | | | 341 | | Structures and Improvements | 44,617,305 | | 42,756,891 |
| 342 | | | 342 | | Fuel Holders, Producers, Accessories | 59,884,043 | | 57,636,669 |
| 343 | | | 343 | | Prime Movers | - | | - |
| 344 | | | 344 | | Generators | 102,242,095 | | 96,934,870 |
| 345 | | | 345 | | Accessory Electric Equipment | 9,110,928 | | 8,488,336 |
| 346 | | | 345.01 | | Computer Hardware | (4,487) | | 41,315 |
| 347 | | | 345.02 | | Computer Software | 54,432 | | 47,120 |
| 348 | | | 345.03 | | Communication Equipment | 7,931 | | 5,988 |
| 349 | | | 346 | | Misc Power Plant Equipment | 11,594,781 | | 10,897,932 |
| 350 | | | 347 | | Asset Retirement Costs - Other Production | 1,480,058 | | 1,250,803 |
| 351 | **Total Other Production Plant - Gas** | | | | | 229,807,407 | | 218,827,276 |
| 352 | | | | | | | | |
| 353 | | | | | | | | |
| 354 | **Total Other Production Accumulated Reserve** | | | | | 229,807,407 | | 218,827,276 |
| 355 | | | | | | | | |
| 356 | **Total Accumulated Reserve Production** | | | | | 980,460,124 | | 941,851,271 |

| | A | B | C | D | E | X | Y | Z |
|---|---|---|---|---|---|---|---|---|
| 1 | **Public Service Company of New Mexico** | | | | | | | |
| 2 | **Schedule C-1** | | | | | | | |
| 3 | **Accumulated Provision for Depreciation and Amortization by Functional Classification** | | | | | | | |
| 4 | **Base Period Ending 6/30/2026** | | | | | | | |
| 5 | **Test Period Ending 9/30/2028** | | | | | | | |
| 6 | Link to WP Plant Lead Sheet | | | | | | | |
| 7 | **Base Period data is historical Information from the Company's Books and Records.** | | | | | | | |
| 8 | This schedule is sponsored by PNM Witness Gutierrez | | | | | | | |
| 9 | | | | | | | | **WP C1a, Column AB** |
| 10 | **Location** | **Location Number Note 2** | **FERC** | **Loc/FERC** | **FERC Description** | **Adjusted Linkage 1 Ending Balance 6/30/2027** | **Reference** | **Linkage 2 Beginning Balance 10/1/2026** |
| 357 | | | | | | | | |
| 358 | | | | | | | | |
| 359 | **Accumulated Reserve Battery Storage Plant** | | | | | | | |
| 386 | **All - Energy Storage** | | 387.01 | 387.01 | Land & Land Rights | - | | - |
| 387 | | | 387.02 | 387.02 | Structures & Improvements | 743,542 | | 205,272 |
| 388 | | | 387.03 | 387.03 | Energy Storage Equipment | 5,930,223 | | 4,539,635 |
| 389 | | | 387.05 | 387.05 | Collector System | 980,708 | | 385,601 |
| 390 | | | 387.06 | 387.06 | Generator Step-Up Transformers (GSU) | 1,898,118 | | 524,361 |
| 391 | | | 387.07 | 387.07 | Inverters | - | | - |
| 392 | | | 387.08 | 387.08 | Computer Hardware | 1,069,628 | | 267,407 |
| 393 | | | 387.09 | 387.09 | Computer Software | 402,428 | | 286,611 |
| 394 | | | 387.10 | 387.10 | Communication Equipment | 59,315 | | 30,668 |
| 395 | | | 387.11 | 387.11 | Misc. Energy Storage Equipment | 2,020,598 | | 1,838,581 |
| 396 | | | 387.12 | 387.12 | Asset Retirement Costs for Energy Storage | - | | - |
| 397 | **Total Accumulated Reserve Energy Storage Plant** | | | | | 13,104,559 | | 8,078,137 |
| 398 | | | | | | | | |
| 399 | | | | | | | | |
| 400 | **Accumulated Reserve Transmission Plant** | | | | | | | |
| 453 | **All - Transmission** | | | | | | | |
| 454 | | | 350 | 350 | Land and Land Rights | 6,188,867 | | 6,208,777 |
| 455 | | | 350.1 | 350.1 | Land - Right of Way | 26,384,330 | | 25,999,864 |
| 456 | | | 351.01 | 351.01 | Computer Hardware | 6,329,002 | | 5,398,239 |
| 457 | | | 351.02 | 351.02 | Computer Software | 6,110,246 | | 5,041,869 |
| 458 | | | 351.03 | 351.03 | Communication Equipment | 18,838,430 | | 17,072,938 |
| 459 | | | 352 | 352 | Structures and Improvements | 28,914,618 | | 25,999,254 |
| 460 | | | 353 | 353 | Station Equipment | 254,345,790 | | 237,244,417 |
| 461 | | | 353.1 | 353.1 | Station Equipment - Step-up Xfmr and Aux | 6,944,238 | | 6,729,762 |
| 462 | | | 354 | 354 | Towers and Fixtures | 48,574,796 | | 48,200,940 |
| 463 | | | 355 | 355 | Poles and Fixtures | 155,243,207 | | 142,357,713 |
| 464 | | | 356 | 356 | Overhead Conductors and Devices | 107,054,186 | | 103,071,904 |
| 465 | | | 357 | 357 | Underground Conduit | 10,365 | | 6,756 |
| 466 | | | 359 | 359 | Roads and Trails | 3,213,805 | | 3,106,897 |
| 467 | **Total Accumulated Reserve Transmission Plant** | | | | | 668,151,880 | | 626,439,330 |
| 468 | | | | | | | | |

| | A | B | C | D | E | X | Y | Z |
|---|---|---|---|---|---|---|---|---|
| 1 | **Public Service Company of New Mexico** | | | | | | | |
| 2 | **Schedule C-1** | | | | | | | |
| 3 | **Accumulated Provision for Depreciation and Amortization by Functional Classification** | | | | | | | |
| 4 | **Base Period Ending 6/30/2026** | | | | | | | |
| 5 | **Test Period Ending 9/30/2028** | | | | | | | |
| 6 | Link to WP Plant Lead Sheet | | | | | | | |
| 7 | **Base Period data is historical Information from the Company's Books and Records.** | | | | | | | |
| 8 | This schedule is sponsored by PNM Witness Gutierrez | | | | | | | |
| 9 | | | | | | | | **WP C1a, Column AB** |
| 10 | **Location** | **Location Number Note 2** | **FERC** | **Loc/FERC** | **FERC Description** | **Adjusted Linkage 1 Ending Balance 6/30/2027** | **Reference** | **Linkage 2 Beginning Balance 10/1/2026** |
| 469 | | | | | | | | |
| 470 | | | | | | | | |
| 471 | **Accumulated Reserve Distribution Plant** | | | | | | | |
| 665 | **All - Distribution** | | | | | | | |
| 666 | | | 360 | | Land and Land Rights | 240,066 | | 253,090 |
| 667 | | | 360.1 | | Land - Right of Way | 1,142,015 | | 1,235,673 |
| 668 | | | 361 | | Structures and Improvements | 13,304,285 | | 12,644,624 |
| 669 | | | 362 | | Station Equipment | 112,592,801 | | 109,773,898 |
| 670 | | | 363.01 | | Computer Hardware | 3,893,628 | | 2,254,104 |
| 671 | | | 363.02 | | Computer Software | 24,449,676 | | 19,354,652 |
| 672 | | | 363.03 | | Communication Equipment | 7,587,284 | | 7,133,379 |
| 673 | | | 364 | | Poles, Towers and Fixtures | 108,228,326 | | 100,080,025 |
| 674 | | | 365 | | Overhead Conductors and Devices | 120,505,547 | | 115,478,594 |
| 675 | | | 366 | | Underground Conduit | 76,258,204 | | 75,108,396 |
| 676 | | | 367 | | Underground Conductors and Devices | 152,459,057 | | 148,242,949 |
| 677 | | | 368 | | Line Transformers | 131,187,294 | | 127,408,298 |
| 678 | | | 369 | | Services | 55,507,061 | | 53,633,657 |
| 679 | | | 369.1 | | Services - Underground | 89,023,179 | | 85,870,194 |
| 680 | | | 370 | | Meters | 12,594,527 | | 13,402,294 |
| 681 | | | 370.4 | | Meters - Grid Mod | (1,516,144) | | (42,902) |
| 682 | | | 371 | | Installations on Customers' Premises | 8,803,176 | | 8,666,939 |
| 683 | | | 371.1 | | Leased Flood Lighting | 273,888 | | 268,306 |
| 684 | | | 373 | | Street Lighting and Signal Systems | 13,311,188 | | 13,137,656 |
| 685 | | | 374 | | Asset Retirement Costs - Distribution | 0 | | - |
| 686 | **Total Accumulated Reserve Distribution Plant** | | | | | 929,845,055 | | 893,903,827 |
| 687 | | | | | | | | |

| | A | B | C | D | E | X | Y | Z |
|---|---|---|---|---|---|---|---|---|
| 1 | **Public Service Company of New Mexico** | | | | | | | |
| 2 | **Schedule C-1** | | | | | | | |
| 3 | **Accumulated Provision for Depreciation and Amortization by Functional Classification** | | | | | | | |
| 4 | **Base Period Ending 6/30/2026** | | | | | | | |
| 5 | **Test Period Ending 9/30/2028** | | | | | | | |
| 6 | Link to WP Plant Lead Sheet | | | | | | | |
| 7 | **Base Period data is historical Information from the Company's Books and Records.** | | | | | | | |
| 8 | This schedule is sponsored by PNM Witness Gutierrez | | | | | | | |
| 9 | | | | | | | | **WP C1a, Column AB** |
| 10 | **Location** | **Location Number Note 2** | **FERC** | **Loc/FERC** | **FERC Description** | **Adjusted Linkage 1 Ending Balance 6/30/2027** | **Reference** | **Linkage 2 Beginning Balance 10/1/2026** |
| 689 | **Accumulated Reserve G&I Plant (303,389-399)** | | | | | | | |
| 719 | **Total General & Intangible Plant** | | | | | | | |
| 720 | | | 303 | 303 | Miscellaneous Intangible Plant | - | | - |
| 721 | | | 389 | 389 | Land and Land Rights | - | | - |
| 722 | | | 390 | 390 | Structures and Improvements | 30,539,507 | | 29,983,075 |
| 723 | | | 390.1 | 390.1 | Bulk Power Office Building Remodeling | 5,710,672 | | 5,721,643 |
| 724 | | | 390.2 | 390.2 | Bulk Power Office Building | 5,846,125 | | 5,846,125 |
| 725 | | | 391 | 391 | Office Furniture and Equipment | 2,908,795 | | 2,794,478 |
| 726 | | | 391.1 | 391.1 | Office Furniture and Equipment - PC System | - | | - |
| 727 | | | 391.2 | 391.2 | Office Furniture and Equipment - PC's | - | | - |
| 728 | | | 391.3 | 391.3 | Computer Hardware | - | | - |
| 729 | | | 391.5 | 391.5 | Computer Hardware - Solar | - | | - |
| 730 | | | 391.7 | 391.7 | Computer Hardware | - | | - |
| 731 | | | 392 | 392 | Transportation Equipment - Light | 2,270,664 | | 2,134,333 |
| 732 | | | 392.1 | 392.1 | Transportation Equipment - Heavy | 3,490,047 | | 3,511,055 |
| 733 | | | 392.2 | 392.2 | Transportation Equipment - Trailers | 3,726,896 | | 3,518,054 |
| 734 | | | 392.4 | 392.4 | Transportation Equipment - Leaseback | - | | - |
| 735 | | | 393 | 393 | Stores Equipment | 88,329 | | 83,432 |
| 736 | | | 394 | 394 | Tools, Shop & Garage Equipment | 9,327,445 | | 9,151,932 |
| 737 | | | 395 | 395 | Laboratory Equipment | 141,117 | | 125,647 |
| 738 | | | 396 | 396 | Power Operated Equipment | 4,307,381 | | 4,159,539 |
| 739 | | | 397.01 | 397.01 | Computer Hardware | 445,206 | | 1,770,541 |
| 740 | | | 397.02 | 397.02 | Computer Software | 24,485,595 | | 21,901,550 |
| 741 | | | 397.03 | 397.03 | Communication Equipment | - | | - |
| 742 | | | 398 | 398 | Miscellaneous Equipment | 1,245,759 | | 1,191,773 |
| 743 | | | 399.1 | 399.1 | ARO General Plant-1 | 16,815 | | 16,579 |
| 744 | **Total Accumulated Reserve G&I Plant - PNM** | | | | | 94,550,355 | | 91,909,758 |
| 745 | | | | | | | | |
| 746 | **Total Electric Plant In Service** | | 101/106 | | | 2,686,111,973 | | 2,562,182,323 |
| 747 | | | | | | | | |
| 748 | **Electric Plant Purchased** | | 102 | | | | | |
| 749 | | | | | | | | |
| 750 | **Electric Plant Acquisition Adjustment** | | | | Acq. Adj. - Palo Verde Unit 1&2 (Drexel) | | | |
| 751 | | | | | Acq. Adj. - Palo Verde Unit 2 (First Chicago) | 832,053 | | - |
| 752 | | | | | Acq. Adj. - (EIP) | - | | - |
| 753 | **Electric Plant Acquisition Adjustment** | | 114 | | | 832,053 | | - |
| 754 | | | | | | | | |
| 755 | **Total Electric Plant** | | | | | 2,686,944,026 | | 2,562,182,323 |
| 756 | | | | | | | | |

| | A | B | C | D | E | X | Y | Z |
|---|---|---|---|---|---|---|---|---|
| 1 | **Public Service Company of New Mexico** | | | | | | | |
| 2 | **Schedule C-1** | | | | | | | |
| 3 | **Accumulated Provision for Depreciation and Amortization by Functional Classification** | | | | | | | |
| 4 | **Base Period Ending 6/30/2026** | | | | | | | |
| 5 | **Test Period Ending 9/30/2028** | | | | | | | |
| 6 | Link to WP Plant Lead Sheet | | | | | | | |
| 7 | **Base Period data is historical Information from the Company's Books and Records.** | | | | | | | |
| 8 | This schedule is sponsored by PNM Witness Gutierrez | | | | | | | |
| 9 | | | | | | | | **WP C1a, Column AB** |
| 10 | **Location** | **Location Number Note 2** | **FERC** | **Loc/FERC** | **FERC Description** | **Adjusted Linkage 1 Ending Balance 6/30/2027** | **Reference** | **Linkage 2 Beginning Balance 10/1/2026** |
| 757 | | | | | | | | |
| 758 | **Corporate Unallocated** | 900 | 303 | 900303 | Miscellaneous Intangible Plant | - | | - |
| 759 | | 900 | 389 | 900389 | Land and Land Rights | (66,097) | | (66,097) |
| 760 | | 900 | 390 | 900390 | Structures and Improvements | 23,883,687 | | 23,192,007 |
| 761 | | 900 | 390.1 | 900390.1 | Bulk Power Office Building Remodeling | - | | - |
| 762 | | 900 | 390.2 | 900390.2 | Bulk Power Office Building | - | | - |
| 763 | | 900 | 391 | 900391 | Office Furniture and Equipment | 376,033 | | 324,747 |
| 764 | | 900 | 391.1 | 900391.1 | Office Furniture and Equipment - PC System | - | | - |
| 765 | | 900 | 391.2 | 900391.2 | Office Furniture and Equipment - PC's | - | | - |
| 766 | | 900 | 391.3 | 900391.3 | Computer Hardware | - | | - |
| 767 | | 900 | 391.5 | 900391.5 | Computer Hardware - Solar | - | | - |
| 768 | | 900 | 391.7 | 900391.7 | Computer Hardware | - | | - |
| 769 | | 900 | 392 | 900392 | Transportation Equipment - Light | 160,102 | | 146,609 |
| 770 | | 900 | 392.1 | 900392.1 | Transportation Equipment - Heavy | 16,716 | | 14,812 |
| 771 | | 900 | 392.2 | 900392.2 | Transportation Equipment - Trailers | (174,163) | | 7,004 |
| 772 | | 900 | 392.4 | 900392.4 | Transportation Equipment - Leaseback | (147) | | (36) |
| 773 | | 900 | 393 | 900393 | Stores Equipment | - | | - |
| 774 | | 900 | 394 | 900394 | Tools, Shop & Garage Equipment | 336,403 | | 314,146 |
| 775 | | 900 | 395 | 900395 | Laboratory Equipment | - | | - |
| 776 | | 900 | 396 | 900396 | Power Operated Equipment | 21,968 | | 21,429 |
| 777 | | 900 | 397 | 900397 | Communication Equipment | - | | - |
| 778 | | 900 | 397.01 | 900397.01 | Computer Hardware | 13,459,042 | | 20,651,047 |
| 779 | | 900 | 397.02 | 900397.02 | Computer Software | 147,010,184 | | 123,815,555 |
| 780 | | 900 | 397.03 | 900397.03 | Communication Equipment | 3,236,078 | | 3,800,508 |
| 781 | | 900 | 397.2 | 900397.2 | Communication Equipment | - | | - |
| 782 | | 900 | 397.3 | 900397.3 | Communication Equipment | - | | - |
| 783 | | 900 | 398 | 900398 | Miscellaneous Equipment | - | | - |
| 784 | | 900 | 399.1 | 900399.1 | ARO General Plant-1 | - | | - |
| 785 | | | | | | | | |
| 786 | **Total Accumulated Reserve Corporate Plant** | | | | | 188,259,807 | | 172,221,731 |
| 787 | | | | | | | | |
| 788 | **Total Electric Plant In Service - with corporate** | | 101/106 | | | 2,874,371,779 | | 2,734,404,054 |
| 789 | | | | | | | | |
| 790 | **Electric Plant Purchased - with Corporate** | | 102 | | | | | |
| 791 | | | | | | | | |
| 792 | **Electric Plant Acq. Adj. - with Corporate** | | 114 | | | 832,053 | | - |
| 793 | | | | | | | | |
| 794 | **Total Electric Plant - with Corporate** | | | | | 2,875,203,832 | | 2,734,404,054 |

| | A | B | C | D | E | AA | AB | AC |
|---|---|---|---|---|---|---|---|---|
| 1 | **Public Service Company of New Mexico** | | | | | | | |
| 2 | **Schedule C-1** | | | | | | | |
| 3 | **Accumulated Provision for Depreciation and Amortization by Functional Classification** | | | | | | | |
| 4 | **Base Period Ending 6/30/2026** | | | | | | | |
| 5 | **Test Period Ending 9/30/2028** | | | | | | | |
| 6 | Link to WP Plant Lead Sheet | | | | | | | |
| 7 | **Base Period data is historical Information from the Company's Books and Records.** | | | | | | | |
| 8 | This schedule is sponsored by PNM Witness Gutierrez | | | | | | | |
| 9 | | | | | | | | |
| 10 | **Location** | **Location Number Note 2** | **FERC** | **Loc/FERC** | **FERC Description** | **Depreciation** | **Retirements** | **Removal Cost** |
| 11 | | | | | | | | |
| 12 | **Production Plant** | | | | | | | |
| 13 | **Steam Production** | | | | | | | |
| 56 | **All - Steam** | | | | | | | |
| 57 | | | 310 | | Land and Land Rights | - | - | - |
| 58 | | | 310.1 | | Land Right of Way | 367 | - | - |
| 59 | | | 311 | | Structures & Improvements | 681,019 | (400,332) | (142,842) |
| 60 | | | 312 | | Boiler Plant Equipment | 5,235,953 | (3,863,712) | (251,413) |
| 61 | | | 314 | | Turbogenerator Units | 2,613,861 | (412,332) | (150,590) |
| 62 | | | 315 | | Accessory Electric Equipment | 711,651 | (168,840) | (14,371) |
| 63 | | | 315.01 | | Computer Hardware | - | - | - |
| 64 | | | 315.02 | | Computer Software | 218,101 | - | - |
| 65 | | | 315.03 | | Communication Equipment | 22,270 | - | - |
| 66 | | | 316 | | Misc Power Plant Equipment | 938,676 | (512,784) | (57,483) |
| 67 | | | 317 | | Asset Retirement Costs - Steam | (113,881) | - | - |
| 68 | **Total Steam Production Accumulated Reserve** | | | | | 10,308,017 | (5,358,000) | (616,698) |
| 69 | | | | | | | | |
| 70 | | | | | | | | |
| 71 | **Nuclear Production** | | | | | | | |
| 129 | **All - Nuclear** | | | | | | | |
| 130 | | | 320 | | Land and Land Rights | - | - | - |
| 131 | | | 320.1 | | Land - Right of Way | 668 | - | - |
| 132 | | | 321 | | Structures and Improvements | 5,302,614 | (207,180) | (133,665) |
| 133 | | | 322 | | Reactor Plant Equipment | 9,730,299 | (834,468) | (601,495) |
| 134 | | | 323 | | Turbogenerator Units | 3,487,868 | (499,836) | - |
| 135 | | | 324 | | Accessory Electric Equipment | 1,353,449 | (116,592) | - |
| 136 | | | 324.01 | | Computer Hardware | - | - | - |
| 137 | | | 324.02 | | Computer Software | 2,163,769 | - | (57,285) |
| 138 | | | 324.03 | | Communication Equipment | 33,233 | - | (9,548) |
| 139 | | | 325 | | Misc Power Plant Equipment | 2,072,995 | (19,332) | (152,761) |
| 140 | | | 326 | | Asset Retirement Costs Nuclear Prod Plant | 134,219 | - | - |
| 141 | **Total Nuclear Production Gross Accumulated Reserve** | | | | | 24,279,115 | (1,677,408) | (954,754) |
| 142 | | | | | | | | |
| 143 | | | | | | | | |

| | A | B | C | D | E | AA | AB | AC |
|---|---|---|---|---|---|---|---|---|
| 1 | **Public Service Company of New Mexico** | | | | | | | |
| 2 | **Schedule C-1** | | | | | | | |
| 3 | **Accumulated Provision for Depreciation and Amortization by Functional Classification** | | | | | | | |
| 4 | **Base Period Ending 6/30/2026** | | | | | | | |
| 5 | **Test Period Ending 9/30/2028** | | | | | | | |
| 6 | Link to WP Plant Lead Sheet | | | | | | | |
| 7 | **Base Period data is historical Information from the Company's Books and Records.** | | | | | | | |
| 8 | This schedule is sponsored by PNM Witness Gutierrez | | | | | | | |
| 9 | | | | | | | | |
| 10 | **Location** | **Location Number Note 2** | **FERC** | **Loc/FERC** | **FERC Description** | **Depreciation** | **Retirements** | **Removal Cost** |
| 144 | **Solar Production** | | | | | | | |
| 237 | **All - Solar** | | | | | | | |
| 238 | | | 338.01 | | Land & Land Rights | - | - | - |
| 239 | | | 338.02 | | Structures and Improvements | 9,133 | - | - |
| 240 | | | 338.04 | | Solar Panels | 9,265,030 | - | - |
| 241 | | | 338.05 | | Collector System | 343,386 | - | - |
| 242 | | | 338.07 | | Solar Inverters | 262,080 | - | - |
| 243 | | | 338.08 | | Other Accessory Electrical Equipment | 798,321 | - | - |
| 244 | | | 338.09 | | Computer Hardware | 10,352 | - | - |
| 245 | | | 338.10 | | Computer Software | - | - | - |
| 246 | | | 338.11 | | Communication Equipment | 42,505 | - | - |
| 247 | | | 338.12 | | Misc. Power Plant Equipment | 166,635 | - | - |
| 248 | **Total Solar Production Gross Accumulated Reserve** | | | | | 10,897,442 | - | - |
| 249 | | | | | | | | |
| 250 | **Other Production** | | | | | | | |
| 251 | | | | | | | | |
| 252 | **Other Production - Gas:** | | | | | | | |
| 339 | **All - Gas** | | 340 | | Land and Land Rights | - | - | - |
| 340 | | | 340.1 | | Land - Right of Way | 70,625 | - | - |
| 341 | | | 341 | | Structures and Improvements | 2,988,844 | (453,948) | (40,821) |
| 342 | | | 342 | | Fuel Holders, Producers, Accessories | 4,232,526 | (95,004) | (1,009,433) |
| 343 | | | 343 | | Prime Movers | - | - | - |
| 344 | | | 344 | | Generators | 8,907,762 | (923,460) | (665,438) |
| 345 | | | 345 | | Accessory Electric Equipment | 1,301,635 | (407,052) | (37,643) |
| 346 | | | 345.01 | | Computer Hardware | 8,083 | (53,885) | - |
| 347 | | | 345.02 | | Computer Software | 9,749 | - | - |
| 348 | | | 345.03 | | Communication Equipment | 2,591 | - | - |
| 349 | | | 346 | | Misc Power Plant Equipment | 1,586,447 | (207,504) | (341,513) |
| 350 | | | 347 | | Asset Retirement Costs - Other Production | 305,673 | - | - |
| 351 | **Total Other Production Plant - Gas** | | | | | 19,413,935 | (2,140,853) | (2,094,848) |
| 352 | | | | | | | | |
| 353 | | | | | | | | |
| 354 | **Total Other Production Accumulated Reserve** | | | | | 19,413,935 | (2,140,853) | (2,094,848) |
| 355 | | | | | | | | |
| 356 | **Total Accumulated Reserve Production** | | | | | 64,898,509 | (9,176,261) | (3,666,300) |

| | A | B | C | D | E | AA | AB | AC |
|---|---|---|---|---|---|---|---|---|
| 1 | **Public Service Company of New Mexico** | | | | | | | |
| 2 | **Schedule C-1** | | | | | | | |
| 3 | **Accumulated Provision for Depreciation and Amortization by Functional Classification** | | | | | | | |
| 4 | **Base Period Ending 6/30/2026** | | | | | | | |
| 5 | **Test Period Ending 9/30/2028** | | | | | | | |
| 6 | Link to WP Plant Lead Sheet | | | | | | | |
| 7 | **Base Period data is historical Information from the Company's Books and Records.** | | | | | | | |
| 8 | This schedule is sponsored by PNM Witness Gutierrez | | | | | | | |
| 9 | | | | | | | | |
| 10 | **Location** | **Location Number Note 2** | **FERC** | **Loc/FERC** | **FERC Description** | **Depreciation** | **Retirements** | **Removal Cost** |
| 357 | | | | | | | | |
| 358 | | | | | | | | |
| 359 | **Accumulated Reserve Battery Storage Plant** | | | | | | | |
| 386 | **All - Energy Storage** | | 387.01 | 387.01 | Land & Land Rights | - | - | - |
| 387 | | | 387.02 | 387.02 | Structures & Improvements | 717,693 | - | - |
| 388 | | | 387.03 | 387.03 | Energy Storage Equipment | 2,308,154 | - | - |
| 389 | | | 387.05 | 387.05 | Collector System | 793,475 | - | - |
| 390 | | | 387.06 | 387.06 | Generator Step-Up Transformers (GSU) | 1,831,676 | - | - |
| 391 | | | 387.07 | 387.07 | Inverters | - | - | - |
| 392 | | | 387.08 | 387.08 | Computer Hardware | 1,069,628 | - | - |
| 393 | | | 387.09 | 387.09 | Computer Software | 154,424 | - | - |
| 394 | | | 387.10 | 387.10 | Communication Equipment | 38,196 | - | - |
| 395 | | | 387.11 | 387.11 | Misc. Energy Storage Equipment | 242,688 | - | - |
| 396 | | | 387.12 | 387.12 | Asset Retirement Costs for Energy Storage | - | - | - |
| 397 | **Total Accumulated Reserve Energy Storage Plant** | | | | | 7,155,934 | - | - |
| 398 | | | | | | | | |
| 399 | | | | | | | | |
| 400 | **Accumulated Reserve Transmission Plant** | | | | | | | |
| 453 | **All - Transmission** | | | | | | | |
| 454 | | | 350 | 350 | Land and Land Rights | - | - | (31,308) |
| 455 | | | 350.1 | 350.1 | Land - Right of Way | 512,772 | - | (1,867) |
| 456 | | | 351.01 | 351.01 | Computer Hardware | 3,515,853 | (1,632,273) | (56,335) |
| 457 | | | 351.02 | 351.02 | Computer Software | 1,426,563 | - | - |
| 458 | | | 351.03 | 351.03 | Communication Equipment | 3,382,389 | (610,837) | (139,027) |
| 459 | | | 352 | 352 | Structures and Improvements | 4,879,799 | (202,848) | (594,273) |
| 460 | | | 353 | 353 | Station Equipment | 28,186,892 | (2,959,416) | (2,065,261) |
| 461 | | | 353.1 | 353.1 | Station Equipment - Step-up Xfmr and Aux | 340,555 | (46,320) | (9,580) |
| 462 | | | 354 | 354 | Towers and Fixtures | 796,678 | (297,540) | (794) |
| 463 | | | 355 | 355 | Poles and Fixtures | 18,985,136 | (1,398,804) | (324,273) |
| 464 | | | 356 | 356 | Overhead Conductors and Devices | 5,768,722 | (200,748) | (197,809) |
| 465 | | | 357 | 357 | Underground Conduit | 11,106 | - | (4,012) |
| 466 | | | 359 | 359 | Roads and Trails | 143,694 | (1,152) | - |
| 467 | **Total Accumulated Reserve Transmission Plant** | | | | | 67,950,160 | (7,349,938) | (3,424,540) |
| 468 | | | | | | | | |

| | A | B | C | D | E | AA | AB | AC |
|---|---|---|---|---|---|---|---|---|
| 1 | **Public Service Company of New Mexico** | | | | | | | |
| 2 | **Schedule C-1** | | | | | | | |
| 3 | **Accumulated Provision for Depreciation and Amortization by Functional Classification** | | | | | | | |
| 4 | **Base Period Ending 6/30/2026** | | | | | | | |
| 5 | **Test Period Ending 9/30/2028** | | | | | | | |
| 6 | Link to WP Plant Lead Sheet | | | | | | | |
| 7 | **Base Period data is historical Information from the Company's Books and Records.** | | | | | | | |
| 8 | This schedule is sponsored by PNM Witness Gutierrez | | | | | | | |
| 9 | | | | | | | | |
| 10 | **Location** | **Location Number Note 2** | **FERC** | **Loc/FERC** | **FERC Description** | **Depreciation** | **Retirements** | **Removal Cost** |
| 469 | | | | | | | | |
| 470 | | | | | | | | |
| 471 | **Accumulated Reserve Distribution Plant** | | | | | | | |
| 665 | **All - Distribution** | | | | | | | |
| 666 | | | 360 | | Land and Land Rights | - | - | (19,801) |
| 667 | | | 360.1 | | Land - Right of Way | 36,944 | - | (120,062) |
| 668 | | | 361 | | Structures and Improvements | 1,305,473 | (112,980) | (277,687) |
| 669 | | | 362 | | Station Equipment | 9,205,720 | (1,079,424) | (3,549,627) |
| 670 | | | 363.01 | | Computer Hardware | 2,945,602 | - | (538,168) |
| 671 | | | 363.02 | | Computer Software | 8,626,837 | - | (1,603,956) |
| 672 | | | 363.03 | | Communication Equipment | 1,904,447 | (60,348) | (968,200) |
| 673 | | | 364 | | Poles, Towers and Fixtures | 21,029,717 | (3,668,676) | (5,306,635) |
| 674 | | | 365 | | Overhead Conductors and Devices | 12,860,636 | (1,808,196) | (3,430,749) |
| 675 | | | 366 | | Underground Conduit | 3,997,567 | (562,464) | (1,652,700) |
| 676 | | | 367 | | Underground Conductors and Devices | 11,266,541 | (2,115,648) | (3,012,141) |
| 677 | | | 368 | | Line Transformers | 7,131,549 | (1,284,948) | (817,559) |
| 678 | | | 369 | | Services | 3,287,995 | (373,800) | (400,481) |
| 679 | | | 369.1 | | Services - Underground | 5,722,352 | (198,228) | (1,268,190) |
| 680 | | | 370 | | Meters | 3,028,569 | (4,232,649) | (382,912) |
| 681 | | | 370.4 | | Meters - Grid Mod | 1,424,804 | - | (3,207,912) |
| 682 | | | 371 | | Installations on Customers' Premises | 181,649 | - | - |
| 683 | | | 371.1 | | Leased Flood Lighting | 7,442 | - | - |
| 684 | | | 373 | | Street Lighting and Signal Systems | 968,714 | (260,688) | (415,181) |
| 685 | | | 374 | | Asset Retirement Costs - Distribution | - | - | - |
| 686 | **Total Accumulated Reserve Distribution Plant** | | | | | 94,932,558 | (15,758,049) | (26,971,961) |
| 687 | | | | | | | | |

| | A | B | C | D | E | AA | AB | AC |
|---|---|---|---|---|---|---|---|---|
| 1 | **Public Service Company of New Mexico** | | | | | | | |
| 2 | **Schedule C-1** | | | | | | | |
| 3 | **Accumulated Provision for Depreciation and Amortization by Functional Classification** | | | | | | | |
| 4 | **Base Period Ending 6/30/2026** | | | | | | | |
| 5 | **Test Period Ending 9/30/2028** | | | | | | | |
| 6 | Link to WP Plant Lead Sheet | | | | | | | |
| 7 | **Base Period data is historical Information from the Company's Books and Records.** | | | | | | | |
| 8 | This schedule is sponsored by PNM Witness Gutierrez | | | | | | | |
| 9 | | | | | | | | |
| 10 | **Location** | **Location Number Note 2** | **FERC** | **Loc/FERC** | **FERC Description** | **Depreciation** | **Retirements** | **Removal Cost** |
| 689 | **Accumulated Reserve G&I Plant (303,389-399)** | | | | | | | |
| 719 | **Total General & Intangible Plant** | | | | | | | |
| 720 | | | 303 | 303 | Miscellaneous Intangible Plant | - | - | - |
| 721 | | | 389 | 389 | Land and Land Rights | - | - | - |
| 722 | | | 390 | 390 | Structures and Improvements | 1,427,237 | (384,996) | (228,512) |
| 723 | | | 390.1 | 390.1 | Bulk Power Office Building Remodeling | 11,298 | (25,932) | - |
| 724 | | | 390.2 | 390.2 | Bulk Power Office Building | - | - | - |
| 725 | | | 391 | 391 | Office Furniture and Equipment | 252,348 | (71,589) | (3,635) |
| 726 | | | 391.1 | 391.1 | Office Furniture and Equipment - PC System | - | - | - |
| 727 | | | 391.2 | 391.2 | Office Furniture and Equipment - PC's | - | - | - |
| 728 | | | 391.3 | 391.3 | Computer Hardware | - | - | - |
| 729 | | | 391.5 | 391.5 | Computer Hardware - Solar | - | - | - |
| 730 | | | 391.7 | 391.7 | Computer Hardware | - | - | - |
| 731 | | | 392 | 392 | Transportation Equipment - Light | 242,217 | (33,828) | (19,125) |
| 732 | | | 392.1 | 392.1 | Transportation Equipment - Heavy | 238,951 | (258,996) | (6,860) |
| 733 | | | 392.2 | 392.2 | Transportation Equipment - Trailers | 285,715 | (3,288) | (2,860) |
| 734 | | | 392.4 | 392.4 | Transportation Equipment - Leaseback | - | - | - |
| 735 | | | 393 | 393 | Stores Equipment | 6,529 | - | - |
| 736 | | | 394 | 394 | Tools, Shop & Garage Equipment | 1,036,890 | (561,029) | (51,229) |
| 737 | | | 395 | 395 | Laboratory Equipment | 20,627 | - | - |
| 738 | | | 396 | 396 | Power Operated Equipment | 205,391 | (3,240) | (4,100) |
| 739 | | | 397.01 | 397.01 | Computer Hardware | 248,540 | (1,530,853) | - |
| 740 | | | 397.02 | 397.02 | Computer Software | 3,462,200 | - | - |
| 741 | | | 397.03 | 397.03 | Communication Equipment | - | - | - |
| 742 | | | 398 | 398 | Miscellaneous Equipment | 119,815 | (30,004) | (5,424) |
| 743 | | | 399.1 | 399.1 | ARO General Plant-1 | 315 | - | - |
| 744 | **Total Accumulated Reserve G&I Plant - PNM** | | | | | 7,558,074 | (2,903,755) | (321,746) |
| 745 | | | | | | | | |
| 746 | **Total Electric Plant In Service** | | 101/106 | | | 242,495,235 | (35,188,002) | (34,384,547) |
| 747 | | | | | | | | |
| 748 | **Electric Plant Purchased** | | 102 | | | | | |
| 749 | | | | | | | | |
| 750 | **Electric Plant Acquisition Adjustment** | | | | Acq. Adj. - Palo Verde Unit 1&2 (Drexel) | | | |
| 751 | | | | | Acq. Adj. - Palo Verde Unit 2 (First Chicago) | 832,053 | - | - |
| 752 | | | | | Acq. Adj. - (EIP) | - | - | - |
| 753 | **Electric Plant Acquisition Adjustment** | | 114 | | | 832,053 | - | - |
| 754 | | | | | | | | |
| 755 | **Total Electric Plant** | | | | | 243,327,288 | (35,188,002) | (34,384,547) |
| 756 | | | | | | | | |

| | A | B | C | D | E | AA | AB | AC |
|---|---|---|---|---|---|---|---|---|
| 1 | **Public Service Company of New Mexico** | | | | | | | |
| 2 | **Schedule C-1** | | | | | | | |
| 3 | **Accumulated Provision for Depreciation and Amortization by Functional Classification** | | | | | | | |
| 4 | **Base Period Ending 6/30/2026** | | | | | | | |
| 5 | **Test Period Ending 9/30/2028** | | | | | | | |
| 6 | Link to WP Plant Lead Sheet | | | | | | | |
| 7 | **Base Period data is historical Information from the Company's Books and Records.** | | | | | | | |
| 8 | This schedule is sponsored by PNM Witness Gutierrez | | | | | | | |
| 9 | | | | | | | | |
| 10 | **Location** | **Location Number Note 2** | **FERC** | **Loc/FERC** | **FERC Description** | **Depreciation** | **Retirements** | **Removal Cost** |
| 757 | | | | | | | | |
| 758 | **Corporate Unallocated** | 900 | 303 | 900303 | Miscellaneous Intangible Plant | - | - | - |
| 759 | | 900 | 389 | 900389 | Land and Land Rights | - | 0 | - |
| 760 | | 900 | 390 | 900390 | Structures and Improvements | 1,482,112 | (544,032) | - |
| 761 | | 900 | 390.1 | 900390.1 | Bulk Power Office Building Remodeling | - | - | - |
| 762 | | 900 | 390.2 | 900390.2 | Bulk Power Office Building | - | - | - |
| 763 | | 900 | 391 | 900391 | Office Furniture and Equipment | 70,583 | - | - |
| 764 | | 900 | 391.1 | 900391.1 | Office Furniture and Equipment - PC System | - | - | - |
| 765 | | 900 | 391.2 | 900391.2 | Office Furniture and Equipment - PC's | - | - | - |
| 766 | | 900 | 391.3 | 900391.3 | Computer Hardware | - | - | - |
| 767 | | 900 | 391.5 | 900391.5 | Computer Hardware - Solar | - | - | - |
| 768 | | 900 | 391.7 | 900391.7 | Computer Hardware | - | - | - |
| 769 | | 900 | 392 | 900392 | Transportation Equipment - Light | 17,991 | - | - |
| 770 | | 900 | 392.1 | 900392.1 | Transportation Equipment - Heavy | 2,539 | - | - |
| 771 | | 900 | 392.2 | 900392.2 | Transportation Equipment - Trailers | 343 | - | - |
| 772 | | 900 | 392.4 | 900392.4 | Transportation Equipment - Leaseback | (4) | (144) | - |
| 773 | | 900 | 393 | 900393 | Stores Equipment | - | - | - |
| 774 | | 900 | 394 | 900394 | Tools, Shop & Garage Equipment | 27,416 | (181,424) | - |
| 775 | | 900 | 395 | 900395 | Laboratory Equipment | - | - | - |
| 776 | | 900 | 396 | 900396 | Power Operated Equipment | 719 | - | - |
| 777 | | 900 | 397 | 900397 | Communication Equipment | - | - | - |
| 778 | | 900 | 397.01 | 900397.01 | Computer Hardware | 7,174,702 | (12,803,231) | - |
| 779 | | 900 | 397.02 | 900397.02 | Computer Software | 31,276,281 | - | - |
| 780 | | 900 | 397.03 | 900397.03 | Communication Equipment | 953,061 | (1,329,066) | - |
| 781 | | 900 | 397.2 | 900397.2 | Communication Equipment | - | - | - |
| 782 | | 900 | 397.3 | 900397.3 | Communication Equipment | - | - | - |
| 783 | | 900 | 398 | 900398 | Miscellaneous Equipment | - | - | - |
| 784 | | 900 | 399.1 | 900399.1 | ARO General Plant-1 | - | - | - |
| 785 | | | | | | | | |
| 786 | **Total Accumulated Reserve Corporate Plant** | | | | | 41,005,742 | (14,857,896) | - |
| 787 | | | | | | | | |
| 788 | **Total Electric Plant In Service - with corporate** | | 101/106 | | | 283,500,978 | (50,045,898) | (34,384,547) |
| 789 | | | | | | | | |
| 790 | **Electric Plant Purchased - with Corporate** | | 102 | | | | | |
| 791 | | | | | | | | |
| 792 | **Electric Plant Acq. Adj. - with Corporate** | | 114 | | | 832,053 | - | - |
| 793 | | | | | | | | |
| 794 | **Total Electric Plant - with Corporate** | | | | | 284,333,031 | (50,045,898) | (34,384,547) |

| | A | B | C | D | E | AD | AE | AF | AG |
|---|---|---|---|---|---|---|---|---|---|
| 1 | **Public Service Company of New Mexico** | | | | | | | | |
| 2 | **Schedule C-1** | | | | | | | | |
| 3 | **Accumulated Provision for Depreciation and Amortization by Functional Classification** | | | | | | | | |
| 4 | **Base Period Ending 6/30/2026** | | | | | | | | |
| 5 | **Test Period Ending 9/30/2028** | | | | | | | | |
| 6 | Link to WP Plant Lead Sheet | | | | | | | | |
| 7 | **Base Period data is historical Information from the Company's Books and Records.** | | | | | | | | |
| 8 | This schedule is sponsored by PNM Witness Gutierrez | | | | | | | | |
| 9 | | | | | | | | | |
| 10 | **Location** | **Location Number Note 2** | **FERC** | **Loc/FERC** | **FERC Description** | **Salvage** | **Other DR/CR** | **Linkage 2 Ending Balance 9/30/2027** | **Linkage 2 Adjustments** |
| 11 | | | | | | | | | |
| 12 | **Production Plant** | | | | | | | | |
| 13 | **Steam Production** | | | | | | | | |
| 56 | **All - Steam** | | | | | | | | |
| 57 | | | 310 | | Land and Land Rights | - | - | - | - |
| 58 | | | 310.1 | | Land Right of Way | - | - | 18,720 | - |
| 59 | | | 311 | | Structures & Improvements | - | - | 7,921,405 | - |
| 60 | | | 312 | | Boiler Plant Equipment | - | - | 94,498,135 | - |
| 61 | | | 314 | | Turbogenerator Units | - | - | 39,629,764 | - |
| 62 | | | 315 | | Accessory Electric Equipment | - | - | 10,822,759 | - |
| 63 | | | 315.01 | | Computer Hardware | - | - | - | - |
| 64 | | | 315.02 | | Computer Software | - | - | 881,723 | - |
| 65 | | | 315.03 | | Communication Equipment | - | - | 220,581 | - |
| 66 | | | 316 | | Misc Power Plant Equipment | - | - | 6,150,303 | - |
| 67 | | | 317 | | Asset Retirement Costs - Steam | - | - | 3,636,322 | - |
| 68 | **Total Steam Production Accumulated Reserve** | | | | | - | - | 163,779,712 | - |
| 69 | | | | | | | | | |
| 70 | | | | | | | | | |
| 71 | **Nuclear Production** | | | | | | | | |
| 129 | **All - Nuclear** | | | | | | | | |
| 130 | | | 320 | | Land and Land Rights | - | - | 0 | - |
| 131 | | | 320.1 | | Land - Right of Way | - | - | 30,768 | - |
| 132 | | | 321 | | Structures and Improvements | - | - | 117,415,184 | - |
| 133 | | | 322 | | Reactor Plant Equipment | - | - | 184,732,435 | - |
| 134 | | | 323 | | Turbogenerator Units | - | - | 64,479,195 | - |
| 135 | | | 324 | | Accessory Electric Equipment | - | - | 44,713,562 | - |
| 136 | | | 324.01 | | Computer Hardware | - | - | - | - |
| 137 | | | 324.02 | | Computer Software | - | - | 6,098,087 | - |
| 138 | | | 324.03 | | Communication Equipment | - | - | 224,114 | - |
| 139 | | | 325 | | Misc Power Plant Equipment | - | - | 40,532,680 | - |
| 140 | | | 326 | | Asset Retirement Costs Nuclear Prod Plant | - | - | 167,773 | - |
| 141 | **Total Nuclear Production Gross Accumulated Reserve** | | | | | - | - | 458,393,799 | - |
| 142 | | | | | | | | | |
| 143 | | | | | | | | | |

| | A | B | C | D | E | AD | AE | AF | AG |
|---|---|---|---|---|---|---|---|---|---|
| 1 | **Public Service Company of New Mexico** | | | | | | | | |
| 2 | **Schedule C-1** | | | | | | | | |
| 3 | **Accumulated Provision for Depreciation and Amortization by Functional Classification** | | | | | | | | |
| 4 | **Base Period Ending 6/30/2026** | | | | | | | | |
| 5 | **Test Period Ending 9/30/2028** | | | | | | | | |
| 6 | Link to WP Plant Lead Sheet | | | | | | | | |
| 7 | **Base Period data is historical Information from the Company's Books and Records.** | | | | | | | | |
| 8 | This schedule is sponsored by PNM Witness Gutierrez | | | | | | | | |
| 9 | | | | | | | | | |
| 10 | **Location** | **Location Number Note 2** | **FERC** | **Loc/FERC** | **FERC Description** | **Salvage** | **Other DR/CR** | **Linkage 2 Ending Balance 9/30/2027** | **Linkage 2 Adjustments** |
| 144 | **Solar Production** | | | | | | | | |
| 237 | **All - Solar** | | | | | | | | |
| 238 | | | 338.01 | | Land & Land Rights | - | - | - | - |
| 239 | | | 338.02 | | Structures and Improvements | - | - | 124,054 | - |
| 240 | | | 338.04 | | Solar Panels | - | - | 119,563,745 | - |
| 241 | | | 338.05 | | Collector System | - | - | 2,510,795 | - |
| 242 | | | 338.07 | | Solar Inverters | - | - | 283,920 | - |
| 243 | | | 338.08 | | Other Accessory Electrical Equipment | - | - | 12,930,274 | - |
| 244 | | | 338.09 | | Computer Hardware | - | - | 25,017 | - |
| 245 | | | 338.10 | | Computer Software | - | - | - | - |
| 246 | | | 338.11 | | Communication Equipment | - | - | 226,354 | - |
| 247 | | | 338.12 | | Misc. Power Plant Equipment | - | - | 2,064,039 | - |
| 248 | **Total Solar Production Gross Accumulated Reserve** | | | | | - | - | 137,728,198 | - |
| 249 | | | | | | | | | |
| 250 | **Other Production** | | | | | | | | |
| 251 | | | | | | | | | |
| 252 | **Other Production - Gas:** | | | | | | | | |
| 339 | **All - Gas** | | 340 | | Land and Land Rights | - | - | - | - |
| 340 | | | 340.1 | | Land - Right of Way | - | - | 837,978 | - |
| 341 | | | 341 | | Structures and Improvements | - | - | 45,250,966 | - |
| 342 | | | 342 | | Fuel Holders, Producers, Accessories | - | - | 60,764,758 | - |
| 343 | | | 343 | | Prime Movers | - | - | - | - |
| 344 | | | 344 | | Generators | - | - | 104,253,734 | - |
| 345 | | | 345 | | Accessory Electric Equipment | - | - | 9,345,276 | - |
| 346 | | | 345.01 | | Computer Hardware | - | - | (4,487) | - |
| 347 | | | 345.02 | | Computer Software | - | - | 56,869 | - |
| 348 | | | 345.03 | | Communication Equipment | - | - | 8,579 | - |
| 349 | | | 346 | | Misc Power Plant Equipment | - | - | 11,935,361 | - |
| 350 | | | 347 | | Asset Retirement Costs - Other Production | - | - | 1,556,476 | - |
| 351 | **Total Other Production Plant - Gas** | | | | | - | - | 234,005,511 | |
| 352 | | | | | | | | | |
| 353 | | | | | | | | | |
| 354 | **Total Other Production Accumulated Reserve** | | | | | - | - | 234,005,511 | - |
| 355 | | | | | | | | | |
| 356 | **Total Accumulated Reserve Production** | | | | | - | - | 993,907,220 | - |

| | A | B | C | D | E | AD | AE | AF | AG |
|---|---|---|---|---|---|---|---|---|---|
| 1 | **Public Service Company of New Mexico** | | | | | | | | |
| 2 | **Schedule C-1** | | | | | | | | |
| 3 | **Accumulated Provision for Depreciation and Amortization by Functional Classification** | | | | | | | | |
| 4 | **Base Period Ending 6/30/2026** | | | | | | | | |
| 5 | **Test Period Ending 9/30/2028** | | | | | | | | |
| 6 | Link to WP Plant Lead Sheet | | | | | | | | |
| 7 | **Base Period data is historical Information from the Company's Books and Records.** | | | | | | | | |
| 8 | This schedule is sponsored by PNM Witness Gutierrez | | | | | | | | |
| 9 | | | | | | | | | |
| 10 | **Location** | **Location Number Note 2** | **FERC** | **Loc/FERC** | **FERC Description** | **Salvage** | **Other DR/CR** | **Linkage 2 Ending Balance 9/30/2027** | **Linkage 2 Adjustments** |
| 357 | | | | | | | | | |
| 358 | | | | | | | | | |
| 359 | **Accumulated Reserve Battery Storage Plant** | | | | | | | | |
| 386 | **All - Energy Storage** | | 387.01 | 387.01 | Land & Land Rights | | | - | |
| 387 | | | 387.02 | 387.02 | Structures & Improvements | | | 922,965 | |
| 388 | | | 387.03 | 387.03 | Energy Storage Equipment | | | 6,847,790 | |
| 389 | | | 387.05 | 387.05 | Collector System | | | 1,179,076 | |
| 390 | | | 387.06 | 387.06 | Generator Step-Up Transformers (GSU) | | | 2,356,037 | |
| 391 | | | 387.07 | 387.07 | Inverters | | | - | |
| 392 | | | 387.08 | 387.08 | Computer Hardware | | | 1,337,035 | |
| 393 | | | 387.09 | 387.09 | Computer Software | | | 441,034 | |
| 394 | | | 387.10 | 387.10 | Communication Equipment | | | 68,864 | |
| 395 | | | 387.11 | 387.11 | Misc. Energy Storage Equipment | | | 2,081,270 | |
| 396 | | | 387.12 | 387.12 | Asset Retirement Costs for Energy Storage | | | - | |
| 397 | **Total Accumulated Reserve Energy Storage Plant** | | | | | - | - | 15,234,071 | - |
| 398 | | | | | | | | | |
| 399 | | | | | | | | | |
| 400 | **Accumulated Reserve Transmission Plant** | | | | | | | | |
| 453 | **All - Transmission** | | | | | | | | |
| 454 | | | 350 | 350 | Land and Land Rights | - | | 6,177,469 | |
| 455 | | | 350.1 | 350.1 | Land - Right of Way | - | | 26,510,770 | |
| 456 | | | 351.01 | 351.01 | Computer Hardware | - | | 7,225,484 | |
| 457 | | | 351.02 | 351.02 | Computer Software | - | | 6,468,431 | |
| 458 | | | 351.03 | 351.03 | Communication Equipment | - | | 19,705,464 | |
| 459 | | | 352 | 352 | Structures and Improvements | - | | 30,081,933 | |
| 460 | | | 353 | 353 | Station Equipment | - | | 260,406,632 | |
| 461 | | | 353.1 | 353.1 | Station Equipment - Step-up Xfmr and Aux | - | | 7,014,417 | |
| 462 | | | 354 | 354 | Towers and Fixtures | - | | 48,699,284 | |
| 463 | | | 355 | 355 | Poles and Fixtures | - | | 159,619,771 | |
| 464 | | | 356 | 356 | Overhead Conductors and Devices | - | | 108,442,069 | |
| 465 | | | 357 | 357 | Underground Conduit | - | | 13,850 | |
| 466 | | | 359 | 359 | Roads and Trails | - | | 3,249,439 | |
| 467 | **Total Accumulated Reserve Transmission Plant** | | | | | - | - | 683,615,011 | - |
| 468 | | | | | | | | | |

| | A | B | C | D | E | AD | AE | AF | AG |
|---|---|---|---|---|---|---|---|---|---|
| 1 | **Public Service Company of New Mexico** | | | | | | | | |
| 2 | **Schedule C-1** | | | | | | | | |
| 3 | **Accumulated Provision for Depreciation and Amortization by Functional Classification** | | | | | | | | |
| 4 | **Base Period Ending 6/30/2026** | | | | | | | | |
| 5 | **Test Period Ending 9/30/2028** | | | | | | | | |
| 6 | Link to WP Plant Lead Sheet | | | | | | | | |
| 7 | **Base Period data is historical Information from the Company's Books and Records.** | | | | | | | | |
| 8 | This schedule is sponsored by PNM Witness Gutierrez | | | | | | | | |
| 9 | | | | | | | | | |
| 10 | **Location** | **Location Number Note 2** | **FERC** | **Loc/FERC** | **FERC Description** | **Salvage** | **Other DR/CR** | **Linkage 2 Ending Balance 9/30/2027** | **Linkage 2 Adjustments** |
| 469 | | | | | | | | | |
| 470 | | | | | | | | | |
| 471 | **Accumulated Reserve Distribution Plant** | | | | | | | | |
| 665 | **All - Distribution** | | | | | | | | |
| 666 | | | 360 | | Land and Land Rights | - | - | 233,288 | |
| 667 | | | 360.1 | | Land - Right of Way | - | - | 1,152,556 | |
| 668 | | | 361 | | Structures and Improvements | - | - | 13,559,429 | |
| 669 | | | 362 | | Station Equipment | - | - | 114,350,567 | |
| 670 | | | 363.01 | | Computer Hardware | - | - | 4,661,538 | |
| 671 | | | 363.02 | | Computer Software | - | - | 26,377,534 | |
| 672 | | | 363.03 | | Communication Equipment | - | - | 8,009,278 | |
| 673 | | | 364 | | Poles, Towers and Fixtures | - | - | 112,134,431 | |
| 674 | | | 365 | | Overhead Conductors and Devices | - | - | 123,100,285 | |
| 675 | | | 366 | | Underground Conduit | - | - | 76,890,799 | |
| 676 | | | 367 | | Underground Conductors and Devices | - | - | 154,381,701 | |
| 677 | | | 368 | | Line Transformers | - | - | 132,437,339 | |
| 678 | | | 369 | | Services | - | - | 56,147,371 | |
| 679 | | | 369.1 | | Services - Underground | - | - | 90,126,128 | |
| 680 | | | 370 | | Meters | - | - | 11,815,303 | |
| 681 | | | 370.4 | | Meters - Grid Mod | - | - | (1,826,009) | |
| 682 | | | 371 | | Installations on Customers' Premises | - | - | 8,848,588 | |
| 683 | | | 371.1 | | Leased Flood Lighting | - | - | 275,748 | |
| 684 | | | 373 | | Street Lighting and Signal Systems | - | - | 13,430,501 | |
| 685 | | | 374 | | Asset Retirement Costs - Distribution | - | - | - | |
| 686 | **Total Accumulated Reserve Distribution Plant** | | | | | - | - | 946,106,375 | - |
| 687 | | | | | | | | | |

| | A | B | C | D | E | AD | AE | AF | AG |
|---|---|---|---|---|---|---|---|---|---|
| 1 | **Public Service Company of New Mexico** | | | | | | | | |
| 2 | **Schedule C-1** | | | | | | | | |
| 3 | **Accumulated Provision for Depreciation and Amortization by Functional Classification** | | | | | | | | |
| 4 | **Base Period Ending 6/30/2026** | | | | | | | | |
| 5 | **Test Period Ending 9/30/2028** | | | | | | | | |
| 6 | Link to WP Plant Lead Sheet | | | | | | | | |
| 7 | **Base Period data is historical Information from the Company's Books and Records.** | | | | | | | | |
| 8 | This schedule is sponsored by PNM Witness Gutierrez | | | | | | | | |
| 9 | | | | | | | | | |
| 10 | **Location** | **Location Number Note 2** | **FERC** | **Loc/FERC** | **FERC Description** | **Salvage** | **Other DR/CR** | **Linkage 2 Ending Balance 9/30/2027** | **Linkage 2 Adjustments** |
| 688 | | | | | | | | | |
| 689 | **Accumulated Reserve G&I Plant (303,389-399)** | | | | | | | | |
| 719 | **Total General & Intangible Plant** | | | | | | | | |
| 720 | | | 303 | 303 | Miscellaneous Intangible Plant | - | - | - | - |
| 721 | | | 389 | 389 | Land and Land Rights | - | - | - | - |
| 722 | | | 390 | 390 | Structures and Improvements | - | - | 30,796,804 | - |
| 723 | | | 390.1 | 390.1 | Bulk Power Office Building Remodeling | - | - | 5,707,010 | - |
| 724 | | | 390.2 | 390.2 | Bulk Power Office Building | - | - | 5,846,125 | - |
| 725 | | | 391 | 391 | Office Furniture and Equipment | - | - | 2,971,602 | - |
| 726 | | | 391.1 | 391.1 | Office Furniture and Equipment - PC System | - | - | - | - |
| 727 | | | 391.2 | 391.2 | Office Furniture and Equipment - PC's | - | - | - | - |
| 728 | | | 391.3 | 391.3 | Computer Hardware | - | - | - | - |
| 729 | | | 391.5 | 391.5 | Computer Hardware - Solar | - | - | - | - |
| 730 | | | 391.7 | 391.7 | Computer Hardware | - | - | - | - |
| 731 | | | 392 | 392 | Transportation Equipment - Light | - | - | 2,323,596 | - |
| 732 | | | 392.1 | 392.1 | Transportation Equipment - Heavy | - | - | 3,484,150 | - |
| 733 | | | 392.2 | 392.2 | Transportation Equipment - Trailers | - | - | 3,797,621 | - |
| 734 | | | 392.4 | 392.4 | Transportation Equipment - Leaseback | - | - | - | - |
| 735 | | | 393 | 393 | Stores Equipment | - | - | 89,962 | - |
| 736 | | | 394 | 394 | Tools, Shop & Garage Equipment | - | - | 9,576,564 | - |
| 737 | | | 395 | 395 | Laboratory Equipment | - | - | 146,274 | - |
| 738 | | | 396 | 396 | Power Operated Equipment | - | - | 4,357,590 | - |
| 739 | | | 397.01 | 397.01 | Computer Hardware | - | - | 488,229 | - |
| 740 | | | 397.02 | 397.02 | Computer Software | - | - | 25,363,750 | - |
| 741 | | | 397.03 | 397.03 | Communication Equipment | - | - | - | - |
| 742 | | | 398 | 398 | Miscellaneous Equipment | - | - | 1,276,160 | - |
| 743 | | | 399.1 | 399.1 | ARO General Plant-1 | - | - | 16,894 | - |
| 744 | **Total Accumulated Reserve G&I Plant - PNM** | | | | | - | - | 96,242,331 | - |
| 745 | | | | | | | | | |
| 746 | **Total Electric Plant In Service** | | 101/106 | | | - | - | 2,735,105,009 | - |
| 747 | | | | | | | | | |
| 748 | **Electric Plant Purchased** | | 102 | | | | | | |
| 749 | | | | | | | | | |
| 750 | **Electric Plant Acquisition Adjustment** | | | | Acq. Adj. - Palo Verde Unit 1&2 (Drexel) | | | | |
| 751 | | | | | Acq. Adj. - Palo Verde Unit 2 (First Chicago) | | | 832,053 | |
| 752 | | | | | Acq. Adj. - (EIP) | | | - | |
| 753 | **Electric Plant Acquisition Adjustment** | | 114 | | | - | - | 832,053 | - |
| 754 | | | | | | | | | |
| 755 | **Total Electric Plant** | | | | | - | - | 2,735,937,063 | - |
| 756 | | | | | | | | | |

| | A | B | C | D | E | AD | AE | AF | AG |
|---|---|---|---|---|---|---|---|---|---|
| 1 | **Public Service Company of New Mexico** | | | | | | | | |
| 2 | **Schedule C-1** | | | | | | | | |
| 3 | **Accumulated Provision for Depreciation and Amortization by Functional Classification** | | | | | | | | |
| 4 | **Base Period Ending 6/30/2026** | | | | | | | | |
| 5 | **Test Period Ending 9/30/2028** | | | | | | | | |
| 6 | Link to WP Plant Lead Sheet | | | | | | | | |
| 7 | **Base Period data is historical Information from the Company's Books and Records.** | | | | | | | | |
| 8 | This schedule is sponsored by PNM Witness Gutierrez | | | | | | | | |
| 9 | | | | | | | | | |
| 10 | **Location** | **Location Number Note 2** | **FERC** | **Loc/FERC** | **FERC Description** | **Salvage** | **Other DR/CR** | **Linkage 2 Ending Balance 9/30/2027** | **Linkage 2 Adjustments** |
| 757 | | | | | | | | | |
| 758 | **Corporate Unallocated** | 900 | 303 | 900303 | Miscellaneous Intangible Plant | | | - | |
| 759 | | 900 | 389 | 900389 | Land and Land Rights | | | (66,097) | |
| 760 | | 900 | 390 | 900390 | Structures and Improvements | | | 24,130,087 | |
| 761 | | 900 | 390.1 | 900390.1 | Bulk Power Office Building Remodeling | | | - | |
| 762 | | 900 | 390.2 | 900390.2 | Bulk Power Office Building | | | - | |
| 763 | | 900 | 391 | 900391 | Office Furniture and Equipment | | | 395,330 | |
| 764 | | 900 | 391.1 | 900391.1 | Office Furniture and Equipment - PC System | | | - | |
| 765 | | 900 | 391.2 | 900391.2 | Office Furniture and Equipment - PC's | | | - | |
| 766 | | 900 | 391.3 | 900391.3 | Computer Hardware | | | - | |
| 767 | | 900 | 391.5 | 900391.5 | Computer Hardware - Solar | | | - | |
| 768 | | 900 | 391.7 | 900391.7 | Computer Hardware | | | - | |
| 769 | | 900 | 392 | 900392 | Transportation Equipment - Light | | | 164,600 | |
| 770 | | 900 | 392.1 | 900392.1 | Transportation Equipment - Heavy | | | 17,351 | |
| 771 | | 900 | 392.2 | 900392.2 | Transportation Equipment - Trailers | | | 7,347 | |
| 772 | | 900 | 392.4 | 900392.4 | Transportation Equipment - Leaseback | | | (185) | |
| 773 | | 900 | 393 | 900393 | Stores Equipment | | | - | |
| 774 | | 900 | 394 | 900394 | Tools, Shop & Garage Equipment | | | 160,138 | |
| 775 | | 900 | 395 | 900395 | Laboratory Equipment | | | - | |
| 776 | | 900 | 396 | 900396 | Power Operated Equipment | | | 22,148 | |
| 777 | | 900 | 397 | 900397 | Communication Equipment | | | - | |
| 778 | | 900 | 397.01 | 900397.01 | Computer Hardware | | | 15,022,519 | |
| 779 | | 900 | 397.02 | 900397.02 | Computer Software | | | 155,091,836 | |
| 780 | | 900 | 397.03 | 900397.03 | Communication Equipment | | | 3,424,503 | |
| 781 | | 900 | 397.2 | 900397.2 | Communication Equipment | | | - | |
| 782 | | 900 | 397.3 | 900397.3 | Communication Equipment | | | - | |
| 783 | | 900 | 398 | 900398 | Miscellaneous Equipment | | | - | |
| 784 | | 900 | 399.1 | 900399.1 | ARO General Plant-1 | | | - | |
| 785 | | | | | | | | | |
| 786 | **Total Accumulated Reserve Corporate Plant** | | | | | - | - | 198,369,577 | - |
| 787 | | | | | | | | | |
| 788 | **Total Electric Plant In Service - with corporate** | | 101/106 | | | - | - | 2,933,474,587 | - |
| 789 | | | | | | | | | |
| 790 | **Electric Plant Purchased - with Corporate** | | 102 | | | | | | |
| 791 | | | | | | | | | |
| 792 | **Electric Plant Acq. Adj. - with Corporate** | | 114 | | | - | - | 832,053 | - |
| 793 | | | | | | | | | |
| 794 | **Total Electric Plant - with Corporate** | | | | | - | - | 2,934,306,640 | - |

| | A | B | C | D | E | AH | AI | AJ |
|---|---|---|---|---|---|---|---|---|
| 1 | **Public Service Company of New Mexico** | | | | | | | |
| 2 | **Schedule C-1** | | | | | | | |
| 3 | **Accumulated Provision for Depreciation and Amortization by Functional Classification** | | | | | | | |
| 4 | **Base Period Ending 6/30/2026** | | | | | | | |
| 5 | **Test Period Ending 9/30/2028** | | | | | | | |
| 6 | Link to WP Plant Lead Sheet | | | | | | | |
| 7 | **Base Period data is historical Information from the Company's Books and Records.** | | | | | | | |
| 8 | This schedule is sponsored by PNM Witness Gutierrez | | | | | | | |
| 9 | | | | | | | | |
| 10 | **Location** | **Location Number Note 2** | **FERC** | **Loc/FERC** | **FERC Description** | **Adjusted Linkage 2 Ending Balance 9/30/2027** | **Reference** | **Test Period Beginning Balance 10/1/2027** |
| 11 | | | | | | | | |
| 12 | **Production Plant** | | | | | | | |
| 13 | **Steam Production** | | | | | | | |
| 56 | **All - Steam** | | | | | | | |
| 57 | | | 310 | | Land and Land Rights | - | | - |
| 58 | | | 310.1 | | Land Right of Way | 18,720 | | 18,720 |
| 59 | | | 311 | | Structures & Improvements | 7,921,405 | | 7,921,405 |
| 60 | | | 312 | | Boiler Plant Equipment | 94,498,135 | | 94,498,135 |
| 61 | | | 314 | | Turbogenerator Units | 39,629,764 | | 39,629,764 |
| 62 | | | 315 | | Accessory Electric Equipment | 10,822,759 | | 10,822,759 |
| 63 | | | 315.01 | | Computer Hardware | - | | - |
| 64 | | | 315.02 | | Computer Software | 881,723 | | 881,723 |
| 65 | | | 315.03 | | Communication Equipment | 220,581 | | 220,581 |
| 66 | | | 316 | | Misc Power Plant Equipment | 6,150,303 | | 6,150,303 |
| 67 | | | 317 | | Asset Retirement Costs - Steam | 3,636,322 | | 3,636,322 |
| 68 | **Total Steam Production Accumulated Reserve** | | | | | 163,779,712 | | 163,779,712 |
| 69 | | | | | | | | |
| 70 | | | | | | | | |
| 71 | **Nuclear Production** | | | | | | | |
| 129 | **All - Nuclear** | | | | | | | |
| 130 | | | 320 | | Land and Land Rights | 0 | | 0 |
| 131 | | | 320.1 | | Land - Right of Way | 30,768 | | 30,768 |
| 132 | | | 321 | | Structures and Improvements | 117,415,184 | | 117,415,184 |
| 133 | | | 322 | | Reactor Plant Equipment | 184,732,435 | | 184,732,435 |
| 134 | | | 323 | | Turbogenerator Units | 64,479,195 | | 64,479,195 |
| 135 | | | 324 | | Accessory Electric Equipment | 44,713,562 | | 44,713,562 |
| 136 | | | 324.01 | | Computer Hardware | - | | - |
| 137 | | | 324.02 | | Computer Software | 6,098,087 | | 6,098,087 |
| 138 | | | 324.03 | | Communication Equipment | 224,114 | | 224,114 |
| 139 | | | 325 | | Misc Power Plant Equipment | 40,532,680 | | 40,532,680 |
| 140 | | | 326 | | Asset Retirement Costs Nuclear Prod Plant | 167,773 | | 167,773 |
| 141 | **Total Nuclear Production Gross Accumulated Reserve** | | | | | 458,393,799 | | 458,393,799 |
| 142 | | | | | | | | |
| 143 | | | | | | | | |

| | A | B | C | D | E | AH | AI | AJ |
|---|---|---|---|---|---|---|---|---|
| 1 | **Public Service Company of New Mexico** | | | | | | | |
| 2 | **Schedule C-1** | | | | | | | |
| 3 | **Accumulated Provision for Depreciation and Amortization by Functional Classification** | | | | | | | |
| 4 | **Base Period Ending 6/30/2026** | | | | | | | |
| 5 | **Test Period Ending 9/30/2028** | | | | | | | |
| 6 | Link to WP Plant Lead Sheet | | | | | | | |
| 7 | **Base Period data is historical Information from the Company's Books and Records.** | | | | | | | |
| 8 | This schedule is sponsored by PNM Witness Gutierrez | | | | | | | |
| 9 | | | | | | | | |
| 10 | **Location** | **Location Number Note 2** | **FERC** | **Loc/FERC** | **FERC Description** | **Adjusted Linkage 2 Ending Balance 9/30/2027** | **Reference** | **Test Period Beginning Balance 10/1/2027** |
| 144 | **Solar Production** | | | | | | | |
| 237 | **All - Solar** | | | | | | | |
| 238 | | | 338.01 | | Land & Land Rights | - | | - |
| 239 | | | 338.02 | | Structures and Improvements | 124,054 | | 124,054 |
| 240 | | | 338.04 | | Solar Panels | 119,563,745 | | 119,563,745 |
| 241 | | | 338.05 | | Collector System | 2,510,795 | | 2,510,795 |
| 242 | | | 338.07 | | Solar Inverters | 283,920 | | 283,920 |
| 243 | | | 338.08 | | Other Accessory Electrical Equipment | 12,930,274 | | 12,930,274 |
| 244 | | | 338.09 | | Computer Hardware | 25,017 | | 25,017 |
| 245 | | | 338.10 | | Computer Software | - | | - |
| 246 | | | 338.11 | | Communication Equipment | 226,354 | | 226,354 |
| 247 | | | 338.12 | | Misc. Power Plant Equipment | 2,064,039 | | 2,064,039 |
| 248 | **Total Solar Production Gross Accumulated Reserve** | | | | | 137,728,198 | | 137,728,198 |
| 249 | | | | | | | | |
| 250 | **Other Production** | | | | | | | |
| 251 | | | | | | | | |
| 252 | **Other Production - Gas:** | | | | | | | |
| 339 | **All - Gas** | | 340 | | Land and Land Rights | - | | - |
| 340 | | | 340.1 | | Land - Right of Way | 837,978 | | 837,978 |
| 341 | | | 341 | | Structures and Improvements | 45,250,966 | | 45,250,966 |
| 342 | | | 342 | | Fuel Holders, Producers, Accessories | 60,764,758 | | 60,764,758 |
| 343 | | | 343 | | Prime Movers | - | | - |
| 344 | | | 344 | | Generators | 104,253,734 | | 104,253,734 |
| 345 | | | 345 | | Accessory Electric Equipment | 9,345,276 | | 9,345,276 |
| 346 | | | 345.01 | | Computer Hardware | (4,487) | | (4,487) |
| 347 | | | 345.02 | | Computer Software | 56,869 | | 56,869 |
| 348 | | | 345.03 | | Communication Equipment | 8,579 | | 8,579 |
| 349 | | | 346 | | Misc Power Plant Equipment | 11,935,361 | | 11,935,361 |
| 350 | | | 347 | | Asset Retirement Costs - Other Production | 1,556,476 | | 1,556,476 |
| 351 | **Total Other Production Plant - Gas** | | | | | 234,005,511 | | 234,005,511 |
| 352 | | | | | | | | |
| 353 | | | | | | | | |
| 354 | **Total Other Production Accumulated Reserve** | | | | | 234,005,511 | | 371,733,709 |
| 355 | | | | | | | | |
| 356 | **Total Accumulated Reserve Production** | | | | | 993,907,220 | | 993,907,220 |

| | A | B | C | D | E | AH | AI | AJ |
|---|---|---|---|---|---|---|---|---|
| 1 | **Public Service Company of New Mexico** | | | | | | | |
| 2 | **Schedule C-1** | | | | | | | |
| 3 | **Accumulated Provision for Depreciation and Amortization by Functional Classification** | | | | | | | |
| 4 | **Base Period Ending 6/30/2026** | | | | | | | |
| 5 | **Test Period Ending 9/30/2028** | | | | | | | |
| 6 | Link to WP Plant Lead Sheet | | | | | | | |
| 7 | **Base Period data is historical Information from the Company's Books and Records.** | | | | | | | |
| 8 | This schedule is sponsored by PNM Witness Gutierrez | | | | | | | |
| 9 | | | | | | | | |
| 10 | **Location** | **Location Number Note 2** | **FERC** | **Loc/FERC** | **FERC Description** | **Adjusted Linkage 2 Ending Balance 9/30/2027** | **Reference** | **Test Period Beginning Balance 10/1/2027** |
| 357 | | | | | | | | |
| 358 | | | | | | | | |
| 359 | **Accumulated Reserve Battery Storage Plant** | | | | | | | |
| 386 | **All - Energy Storage** | | 387.01 | 387.01 | Land & Land Rights | - | | - |
| 387 | | | 387.02 | 387.02 | Structures & Improvements | 922,965 | | 922,965 |
| 388 | | | 387.03 | 387.03 | Energy Storage Equipment | 6,847,790 | | 6,847,790 |
| 389 | | | 387.05 | 387.05 | Collector System | 1,179,076 | | 1,179,076 |
| 390 | | | 387.06 | 387.06 | Generator Step-Up Transformers (GSU) | 2,356,037 | | 2,356,037 |
| 391 | | | 387.07 | 387.07 | Inverters | - | | - |
| 392 | | | 387.08 | 387.08 | Computer Hardware | 1,337,035 | | 1,337,035 |
| 393 | | | 387.09 | 387.09 | Computer Software | 441,034 | | 441,034 |
| 394 | | | 387.10 | 387.10 | Communication Equipment | 68,864 | | 68,864 |
| 395 | | | 387.11 | 387.11 | Misc. Energy Storage Equipment | 2,081,270 | | 2,081,270 |
| 396 | | | 387.12 | 387.12 | Asset Retirement Costs for Energy Storage | - | | - |
| 397 | **Total Accumulated Reserve Energy Storage Plant** | | | | | 15,234,071 | | 15,234,071 |
| 398 | | | | | | | | |
| 399 | | | | | | | | |
| 400 | **Accumulated Reserve Transmission Plant** | | | | | | | |
| 453 | **All - Transmission** | | | | | | | |
| 454 | | | 350 | 350 | Land and Land Rights | 6,177,469 | | 6,177,469 |
| 455 | | | 350.1 | 350.1 | Land - Right of Way | 26,510,770 | | 26,510,770 |
| 456 | | | 351.01 | 351.01 | Computer Hardware | 7,225,484 | | 7,225,484 |
| 457 | | | 351.02 | 351.02 | Computer Software | 6,468,431 | | 6,468,431 |
| 458 | | | 351.03 | 351.03 | Communication Equipment | 19,705,464 | | 19,705,464 |
| 459 | | | 352 | 352 | Structures and Improvements | 30,081,933 | | 30,081,933 |
| 460 | | | 353 | 353 | Station Equipment | 260,406,632 | | 260,406,632 |
| 461 | | | 353.1 | 353.1 | Station Equipment - Step-up Xfmr and Aux | 7,014,417 | | 7,014,417 |
| 462 | | | 354 | 354 | Towers and Fixtures | 48,699,284 | | 48,699,284 |
| 463 | | | 355 | 355 | Poles and Fixtures | 159,619,771 | | 159,619,771 |
| 464 | | | 356 | 356 | Overhead Conductors and Devices | 108,442,069 | | 108,442,069 |
| 465 | | | 357 | 357 | Underground Conduit | 13,850 | | 13,850 |
| 466 | | | 359 | 359 | Roads and Trails | 3,249,439 | | 3,249,439 |
| 467 | **Total Accumulated Reserve Transmission Plant** | | | | | 683,615,011 | | 683,615,011 |
| 468 | | | | | | | | |

| | A | B | C | D | E | AH | AI | AJ |
|---|---|---|---|---|---|---|---|---|
| 1 | **Public Service Company of New Mexico** | | | | | | | |
| 2 | **Schedule C-1** | | | | | | | |
| 3 | **Accumulated Provision for Depreciation and Amortization by Functional Classification** | | | | | | | |
| 4 | **Base Period Ending 6/30/2026** | | | | | | | |
| 5 | **Test Period Ending 9/30/2028** | | | | | | | |
| 6 | Link to WP Plant Lead Sheet | | | | | | | |
| 7 | **Base Period data is historical Information from the Company's Books and Records.** | | | | | | | |
| 8 | This schedule is sponsored by PNM Witness Gutierrez | | | | | | | |
| 9 | | | | | | | | |
| 10 | **Location** | **Location Number Note 2** | **FERC** | **Loc/FERC** | **FERC Description** | **Adjusted Linkage 2 Ending Balance 9/30/2027** | **Reference** | **Test Period Beginning Balance 10/1/2027** |
| 469 | | | | | | | | |
| 470 | | | | | | | | |
| 471 | **Accumulated Reserve Distribution Plant** | | | | | | | |
| 665 | **All - Distribution** | | | | | | | |
| 666 | | | 360 | | Land and Land Rights | 233,288 | | 233,288 |
| 667 | | | 360.1 | | Land - Right of Way | 1,152,556 | | 1,152,556 |
| 668 | | | 361 | | Structures and Improvements | 13,559,429 | | 13,559,429 |
| 669 | | | 362 | | Station Equipment | 114,350,567 | | 114,350,567 |
| 670 | | | 363.01 | | Computer Hardware | 4,661,538 | | 4,661,538 |
| 671 | | | 363.02 | | Computer Software | 26,377,534 | | 26,377,534 |
| 672 | | | 363.03 | | Communication Equipment | 8,009,278 | | 8,009,278 |
| 673 | | | 364 | | Poles, Towers and Fixtures | 112,134,431 | | 112,134,431 |
| 674 | | | 365 | | Overhead Conductors and Devices | 123,100,285 | | 123,100,285 |
| 675 | | | 366 | | Underground Conduit | 76,890,799 | | 76,890,799 |
| 676 | | | 367 | | Underground Conductors and Devices | 154,381,701 | | 154,381,701 |
| 677 | | | 368 | | Line Transformers | 132,437,339 | | 132,437,339 |
| 678 | | | 369 | | Services | 56,147,371 | | 56,147,371 |
| 679 | | | 369.1 | | Services - Underground | 90,126,128 | | 90,126,128 |
| 680 | | | 370 | | Meters | 11,815,303 | | 11,815,303 |
| 681 | | | 370.4 | | Meters - Grid Mod | (1,826,009) | | (1,826,009) |
| 682 | | | 371 | | Installations on Customers' Premises | 8,848,588 | | 8,848,588 |
| 683 | | | 371.1 | | Leased Flood Lighting | 275,748 | | 275,748 |
| 684 | | | 373 | | Street Lighting and Signal Systems | 13,430,501 | | 13,430,501 |
| 685 | | | 374 | | Asset Retirement Costs - Distribution | - | | - |
| 686 | **Total Accumulated Reserve Distribution Plant** | | | | | 946,106,375 | | 946,106,375 |
| 687 | | | | | | | | |

| | A | B | C | D | E | AH | AI | AJ |
|---|---|---|---|---|---|---|---|---|
| 1 | **Public Service Company of New Mexico** | | | | | | | |
| 2 | **Schedule C-1** | | | | | | | |
| 3 | **Accumulated Provision for Depreciation and Amortization by Functional Classification** | | | | | | | |
| 4 | **Base Period Ending 6/30/2026** | | | | | | | |
| 5 | **Test Period Ending 9/30/2028** | | | | | | | |
| 6 | Link to WP Plant Lead Sheet | | | | | | | |
| 7 | **Base Period data is historical Information from the Company's Books and Records.** | | | | | | | |
| 8 | This schedule is sponsored by PNM Witness Gutierrez | | | | | | | |
| 9 | | | | | | | | |
| 10 | **Location** | **Location Number Note 2** | **FERC** | **Loc/FERC** | **FERC Description** | **Adjusted Linkage 2 Ending Balance 9/30/2027** | **Reference** | **Test Period Beginning Balance 10/1/2027** |
| 689 | **Accumulated Reserve G&I Plant (303,389-399)** | | | | | | | |
| 719 | **Total General & Intangible Plant** | | | | | - | | |
| 720 | | | 303 | 303 | Miscellaneous Intangible Plant | - | | - |
| 721 | | | 389 | 389 | Land and Land Rights | - | | - |
| 722 | | | 390 | 390 | Structures and Improvements | 30,796,804 | | 30,796,804 |
| 723 | | | 390.1 | 390.1 | Bulk Power Office Building Remodeling | 5,707,010 | | 5,707,010 |
| 724 | | | 390.2 | 390.2 | Bulk Power Office Building | 5,846,125 | | 5,846,125 |
| 725 | | | 391 | 391 | Office Furniture and Equipment | 2,971,602 | | 2,971,602 |
| 726 | | | 391.1 | 391.1 | Office Furniture and Equipment - PC System | - | | - |
| 727 | | | 391.2 | 391.2 | Office Furniture and Equipment - PC's | - | | - |
| 728 | | | 391.3 | 391.3 | Computer Hardware | - | | - |
| 729 | | | 391.5 | 391.5 | Computer Hardware - Solar | - | | - |
| 730 | | | 391.7 | 391.7 | Computer Hardware | - | | - |
| 731 | | | 392 | 392 | Transportation Equipment - Light | 2,323,596 | | 2,323,596 |
| 732 | | | 392.1 | 392.1 | Transportation Equipment - Heavy | 3,484,150 | | 3,484,150 |
| 733 | | | 392.2 | 392.2 | Transportation Equipment - Trailers | 3,797,621 | | 3,797,621 |
| 734 | | | 392.4 | 392.4 | Transportation Equipment - Leaseback | - | | - |
| 735 | | | 393 | 393 | Stores Equipment | 89,962 | | 89,962 |
| 736 | | | 394 | 394 | Tools, Shop & Garage Equipment | 9,576,564 | | 9,576,564 |
| 737 | | | 395 | 395 | Laboratory Equipment | 146,274 | | 146,274 |
| 738 | | | 396 | 396 | Power Operated Equipment | 4,357,590 | | 4,357,590 |
| 739 | | | 397.01 | 397.01 | Computer Hardware | 488,229 | | 488,229 |
| 740 | | | 397.02 | 397.02 | Computer Software | 25,363,750 | | 25,363,750 |
| 741 | | | 397.03 | 397.03 | Communication Equipment | - | | - |
| 742 | | | 398 | 398 | Miscellaneous Equipment | 1,276,160 | | 1,276,160 |
| 743 | | | 399.1 | 399.1 | ARO General Plant-1 | 16,894 | | 16,894 |
| 744 | **Total Accumulated Reserve G&I Plant - PNM** | | | | | 96,242,331 | | 96,242,331 |
| 745 | | | | | | | | |
| 746 | **Total Electric Plant In Service** | | 101/106 | | | 2,735,105,009 | | 2,735,105,009 |
| 747 | | | | | | | | |
| 748 | **Electric Plant Purchased** | | 102 | | | | | |
| 749 | | | | | | | | |
| 750 | **Electric Plant Acquisition Adjustment** | | | | Acq. Adj. - Palo Verde Unit 1&2 (Drexel) | | | |
| 751 | | | | | Acq. Adj. - Palo Verde Unit 2 (First Chicago) | 832,053 | | 832,053 |
| 752 | | | | | Acq. Adj. - (EIP) | - | | - |
| 753 | **Electric Plant Acquisition Adjustment** | | 114 | | | 832,053 | | 832,053 |
| 754 | | | | | | | | |
| 755 | **Total Electric Plant** | | | | | 2,735,937,063 | | 2,735,937,063 |
| 756 | | | | | | | | |

| | A | B | C | D | E | AH | AI | AJ |
|---|---|---|---|---|---|---|---|---|
| 1 | **Public Service Company of New Mexico** | | | | | | | |
| 2 | **Schedule C-1** | | | | | | | |
| 3 | **Accumulated Provision for Depreciation and Amortization by Functional Classification** | | | | | | | |
| 4 | **Base Period Ending 6/30/2026** | | | | | | | |
| 5 | **Test Period Ending 9/30/2028** | | | | | | | |
| 6 | Link to WP Plant Lead Sheet | | | | | | | |
| 7 | **Base Period data is historical Information from the Company's Books and Records.** | | | | | | | |
| 8 | This schedule is sponsored by PNM Witness Gutierrez | | | | | | | |
| 9 | | | | | | | | |
| 10 | **Location** | **Location Number Note 2** | **FERC** | **Loc/FERC** | **FERC Description** | **Adjusted Linkage 2 Ending Balance 9/30/2027** | **Reference** | **Test Period Beginning Balance 10/1/2027** |
| 757 | | | | | | | | |
| 758 | **Corporate Unallocated** | 900 | 303 | 900303 | Miscellaneous Intangible Plant | - | | - |
| 759 | | 900 | 389 | 900389 | Land and Land Rights | (66,097) | | (66,097) |
| 760 | | 900 | 390 | 900390 | Structures and Improvements | 24,130,087 | | 24,130,087 |
| 761 | | 900 | 390.1 | 900390.1 | Bulk Power Office Building Remodeling | - | | - |
| 762 | | 900 | 390.2 | 900390.2 | Bulk Power Office Building | - | | - |
| 763 | | 900 | 391 | 900391 | Office Furniture and Equipment | 395,330 | | 395,330 |
| 764 | | 900 | 391.1 | 900391.1 | Office Furniture and Equipment - PC System | - | | - |
| 765 | | 900 | 391.2 | 900391.2 | Office Furniture and Equipment - PC's | - | | - |
| 766 | | 900 | 391.3 | 900391.3 | Computer Hardware | - | | - |
| 767 | | 900 | 391.5 | 900391.5 | Computer Hardware - Solar | - | | - |
| 768 | | 900 | 391.7 | 900391.7 | Computer Hardware | - | | - |
| 769 | | 900 | 392 | 900392 | Transportation Equipment - Light | 164,600 | | 164,600 |
| 770 | | 900 | 392.1 | 900392.1 | Transportation Equipment - Heavy | 17,351 | | 17,351 |
| 771 | | 900 | 392.2 | 900392.2 | Transportation Equipment - Trailers | 7,347 | | 7,347 |
| 772 | | 900 | 392.4 | 900392.4 | Transportation Equipment - Leaseback | (185) | | (185) |
| 773 | | 900 | 393 | 900393 | Stores Equipment | - | | - |
| 774 | | 900 | 394 | 900394 | Tools, Shop & Garage Equipment | 160,138 | | 160,138 |
| 775 | | 900 | 395 | 900395 | Laboratory Equipment | - | | - |
| 776 | | 900 | 396 | 900396 | Power Operated Equipment | 22,148 | | 22,148 |
| 777 | | 900 | 397 | 900397 | Communication Equipment | - | | - |
| 778 | | 900 | 397.01 | 900397.01 | Computer Hardware | 15,022,519 | | 15,022,519 |
| 779 | | 900 | 397.02 | 900397.02 | Computer Software | 155,091,836 | | 155,091,836 |
| 780 | | 900 | 397.03 | 900397.03 | Communication Equipment | 3,424,503 | | 3,424,503 |
| 781 | | 900 | 397.2 | 900397.2 | Communication Equipment | - | | - |
| 782 | | 900 | 397.3 | 900397.3 | Communication Equipment | - | | - |
| 783 | | 900 | 398 | 900398 | Miscellaneous Equipment | - | | - |
| 784 | | 900 | 399.1 | 900399.1 | ARO General Plant-1 | - | | - |
| 785 | | | | | | | | |
| 786 | **Total Accumulated Reserve Corporate Plant** | | | | | 198,369,577 | | 198,369,577 |
| 787 | | | | | | | | |
| 788 | **Total Electric Plant In Service - with corporate** | | 101/106 | | | 2,933,474,587 | | 2,933,474,587 |
| 789 | | | | | | | | |
| 790 | **Electric Plant Purchased - with Corporate** | | 102 | | | | | |
| 791 | | | | | | | | |
| 792 | **Electric Plant Acq. Adj. - with Corporate** | | 114 | | | 832,053 | | 832,053 |
| 793 | | | | | | | | |
| 794 | **Total Electric Plant - with Corporate** | | | | | 2,934,306,640 | | 2,934,306,640 |

| | A | B | C | D | E | AK | AL | AM | AN | AO |
|---|---|---|---|---|---|---|---|---|---|---|
| 1 | **Public Service Company of New Mexico** | | | | | | | | | |
| 2 | **Schedule C-1** | | | | | | | | | |
| 3 | **Accumulated Provision for Depreciation and Amortization by Functional Classification** | | | | | | | | | |
| 4 | **Base Period Ending 6/30/2026** | | | | | | | | | |
| 5 | **Test Period Ending 9/30/2028** | | | | | | | | | |
| 6 | Link to WP Plant Lead Sheet | | | | | | | | | |
| 7 | **Base Period data is historical Information from the Company's Books and Records.** | | | | | | | | | |
| 8 | This schedule is sponsored by PNM Witness Gutierrez | | | | | | | | | |
| 9 | | | | | | | | | | |
| 10 | **Location** | **Location Number Note 2** | **FERC** | **Loc/FERC** | **FERC Description** | **Depreciation** | **Retirements** | **Removal Cost** | **Salvage** | **Other DR/CR** |
| 11 | | | | | | | | | | |
| 12 | **Production Plant** | | | | | | | | | |
| 13 | **Steam Production** | | | | | | | | | |
| 56 | **All - Steam** | | | | | | | | | |
| 57 | | | 310 | | Land and Land Rights | - | - | - | - | - |
| 58 | | | 310.1 | | Land Right of Way | 333 | - | - | - | - |
| 59 | | | 311 | | Structures & Improvements | 688,132 | (400,332) | (434,996) | - | - |
| 60 | | | 312 | | Boiler Plant Equipment | 3,485,247 | (3,863,712) | (641,313) | - | - |
| 61 | | | 314 | | Turbogenerator Units | 1,548,431 | (412,332) | (386,408) | - | - |
| 62 | | | 315 | | Accessory Electric Equipment | 356,695 | (168,840) | (35,129) | - | - |
| 63 | | | 315.01 | | Computer Hardware | - | - | - | - | - |
| 64 | | | 315.02 | | Computer Software | 201,134 | - | - | - | - |
| 65 | | | 315.03 | | Communication Equipment | 23,155 | - | - | - | - |
| 66 | | | 316 | | Misc Power Plant Equipment | 712,518 | (512,784) | (140,517) | - | - |
| 67 | | | 317 | | Asset Retirement Costs - Steam | (113,881) | - | - | - | - |
| 68 | **Total Steam Production Accumulated Reserve** | | | | | 6,901,761 | (5,358,000) | (1,638,363) | - | - |
| 69 | | | | | | | | | | |
| 70 | | | | | | | | | | |
| 71 | **Nuclear Production** | | | | | | | | | |
| 129 | **All - Nuclear** | | | | | | | | | |
| 130 | | | 320 | | Land and Land Rights | - | - | - | - | - |
| 131 | | | 320.1 | | Land - Right of Way | 699 | - | - | - | - |
| 132 | | | 321 | | Structures and Improvements | 5,187,902 | (207,180) | (333,085) | - | - |
| 133 | | | 322 | | Reactor Plant Equipment | 9,105,674 | (834,468) | (1,498,883) | - | - |
| 134 | | | 323 | | Turbogenerator Units | 3,003,801 | (499,836) | - | - | - |
| 135 | | | 324 | | Accessory Electric Equipment | 966,206 | (116,592) | - | - | - |
| 136 | | | 324.01 | | Computer Hardware | - | - | - | - | - |
| 137 | | | 324.02 | | Computer Software | 2,477,056 | - | (142,751) | - | - |
| 138 | | | 324.03 | | Communication Equipment | 42,702 | - | (23,792) | - | - |
| 139 | | | 325 | | Misc Power Plant Equipment | 2,215,866 | (19,332) | (380,669) | - | - |
| 140 | | | 326 | | Asset Retirement Costs Nuclear Prod Plant | 134,219 | - | - | - | - |
| 141 | **Total Nuclear Production Gross Accumulated Reserve** | | | | | 23,134,125 | (1,677,408) | (2,379,179) | - | - |
| 142 | | | | | | | | | | |
| 143 | | | | | | | | | | |

| | A | B | C | D | E | AK | AL | AM | AN | AO |
|---|---|---|---|---|---|---|---|---|---|---|
| 1 | **Public Service Company of New Mexico** | | | | | | | | | |
| 2 | **Schedule C-1** | | | | | | | | | |
| 3 | **Accumulated Provision for Depreciation and Amortization by Functional Classification** | | | | | | | | | |
| 4 | **Base Period Ending 6/30/2026** | | | | | | | | | |
| 5 | **Test Period Ending 9/30/2028** | | | | | | | | | |
| 6 | Link to WP Plant Lead Sheet | | | | | | | | | |
| 7 | **Base Period data is historical Information from the Company's Books and Records.** | | | | | | | | | |
| 8 | This schedule is sponsored by PNM Witness Gutierrez | | | | | | | | | |
| 9 | | | | | | | | | | |
| 10 | **Location** | **Location Number Note 2** | **FERC** | **Loc/FERC** | **FERC Description** | **Depreciation** | **Retirements** | **Removal Cost** | **Salvage** | **Other DR/CR** |
| 144 | **Solar Production** | | | | | | | | | |
| 237 | **All - Solar** | | | | | | | | | |
| 238 | | | 338.01 | | Land & Land Rights | - | - | - | - | - |
| 239 | | | 338.02 | | Structures and Improvements | 9,133 | - | - | - | - |
| 240 | | | 338.04 | | Solar Panels | 14,686,888 | - | - | - | - |
| 241 | | | 338.05 | | Collector System | 314,607 | - | - | - | - |
| 242 | | | 338.07 | | Solar Inverters | 722,827 | - | - | - | - |
| 243 | | | 338.08 | | Other Accessory Electrical Equipment | 827,993 | - | - | - | - |
| 244 | | | 338.09 | | Computer Hardware | 9,969 | - | - | - | - |
| 245 | | | 338.10 | | Computer Software | - | - | - | - | - |
| 246 | | | 338.11 | | Communication Equipment | 35,719 | - | - | - | - |
| 247 | | | 338.12 | | Misc. Power Plant Equipment | 165,937 | - | - | - | - |
| 248 | **Total Solar Production Gross Accumulated Reserve** | | | | | 16,773,074 | - | - | - | - |
| 249 | | | | | | | | | | |
| 250 | **Other Production** | | | | | | | | | |
| 251 | | | | | | | | | | |
| 252 | **Other Production - Gas:** | | | | | | | | | |
| 339 | **All - Gas** | | 340 | | Land and Land Rights | - | - | - | - | - |
| 340 | | | 340.1 | | Land - Right of Way | 75,450 | - | - | - | - |
| 341 | | | 341 | | Structures and Improvements | 2,903,573 | (453,948) | (64,176) | - | - |
| 342 | | | 342 | | Fuel Holders, Producers, Accessories | 4,726,408 | (95,004) | (100,184) | - | - |
| 343 | | | 343 | | Prime Movers | - | - | - | - | - |
| 344 | | | 344 | | Generators | 11,196,443 | (923,460) | (1,437,965) | - | - |
| 345 | | | 345 | | Accessory Electric Equipment | 1,781,710 | (407,052) | (58,436) | - | - |
| 346 | | | 345.01 | | Computer Hardware | - | - | - | - | - |
| 347 | | | 345.02 | | Computer Software | 812 | - | - | - | - |
| 348 | | | 345.03 | | Communication Equipment | 2,579 | - | - | - | - |
| 349 | | | 346 | | Misc Power Plant Equipment | 2,282,203 | (207,504) | (362,024) | - | - |
| 350 | | | 347 | | Asset Retirement Costs - Other Production | 305,673 | - | - | - | - |
| 351 | **Total Other Production Plant - Gas** | | | | | 23,274,853 | (2,086,968) | (2,022,785) | - | - |
| 352 | | | | | | | | | | |
| 353 | | | | | | | | | | |
| 354 | **Total Other Production Accumulated Reserve** | | | | | 23,274,853 | (2,086,968) | (2,022,785) | - | - |
| 355 | | | | | | | | | | |
| 356 | **Total Accumulated Reserve Production** | | | | | 70,083,814 | (9,122,376) | (6,040,327) | - | - |

| | A | B | C | D | E | AK | AL | AM | AN | AO |
|---|---|---|---|---|---|---|---|---|---|---|
| 1 | **Public Service Company of New Mexico** | | | | | | | | | |
| 2 | **Schedule C-1** | | | | | | | | | |
| 3 | **Accumulated Provision for Depreciation and Amortization by Functional Classification** | | | | | | | | | |
| 4 | **Base Period Ending 6/30/2026** | | | | | | | | | |
| 5 | **Test Period Ending 9/30/2028** | | | | | | | | | |
| 6 | Link to WP Plant Lead Sheet | | | | | | | | | |
| 7 | **Base Period data is historical Information from the Company's Books and Records.** | | | | | | | | | |
| 8 | This schedule is sponsored by PNM Witness Gutierrez | | | | | | | | | |
| 9 | | | | | | | | | | |
| 10 | **Location** | **Location Number Note 2** | **FERC** | **Loc/FERC** | **FERC Description** | **Depreciation** | **Retirements** | **Removal Cost** | **Salvage** | **Other DR/CR** |
| 357 | | | | | | | | | | |
| 358 | | | | | | | | | | |
| 359 | **Accumulated Reserve Battery Storage Plant** | | | | | | | | | |
| 386 | **All - Energy Storage** | | 387.01 | 387.01 | Land & Land Rights | - | - | - | | |
| 387 | | | 387.02 | 387.02 | Structures & Improvements | 1,223,705 | - | - | | |
| 388 | | | 387.03 | 387.03 | Energy Storage Equipment | 10,023,386 | - | - | | |
| 389 | | | 387.05 | 387.05 | Collector System | 1,352,917 | - | - | | |
| 390 | | | 387.06 | 387.06 | Generator Step-Up Transformers (GSU) | 3,123,105 | - | - | | |
| 391 | | | 387.07 | 387.07 | Inverters | - | - | - | | |
| 392 | | | 387.08 | 387.08 | Computer Hardware | 877,650 | - | - | | |
| 393 | | | 387.09 | 387.09 | Computer Software | 154,424 | - | - | | |
| 394 | | | 387.10 | 387.10 | Communication Equipment | 91,369 | - | - | | |
| 395 | | | 387.11 | 387.11 | Misc. Energy Storage Equipment | 530,954 | - | - | | |
| 396 | | | 387.12 | 387.12 | Asset Retirement Costs for Energy Storage | - | - | - | | |
| 397 | **Total Accumulated Reserve Energy Storage Plant** | | | | | 17,377,509 | - | - | - | - |
| 398 | | | | | | | | | | |
| 399 | | | | | | | | | | |
| 400 | **Accumulated Reserve Transmission Plant** | | | | | | | | | |
| 453 | **All - Transmission** | | | | | | | | | |
| 454 | | | 350 | 350 | Land and Land Rights | - | - | (48,801) | - | - |
| 455 | | | 350.1 | 350.1 | Land - Right of Way | 513,923 | - | (579) | - | - |
| 456 | | | 351.01 | 351.01 | Computer Hardware | 4,942,647 | (123,843) | (60,272) | - | - |
| 457 | | | 351.02 | 351.02 | Computer Software | 1,479,662 | - | - | - | - |
| 458 | | | 351.03 | 351.03 | Communication Equipment | 3,881,966 | (1,372,326) | (120,976) | - | - |
| 459 | | | 352 | 352 | Structures and Improvements | 5,754,878 | (202,848) | (506,380) | - | - |
| 460 | | | 353 | 353 | Station Equipment | 29,354,722 | (2,959,416) | (2,590,113) | - | - |
| 461 | | | 353.1 | 353.1 | Station Equipment - Step-up Xfmr and Aux | 342,613 | (46,320) | (23,420) | - | - |
| 462 | | | 354 | 354 | Towers and Fixtures | 691,308 | (297,540) | (152,555) | - | - |
| 463 | | | 355 | 355 | Poles and Fixtures | 18,423,927 | (1,398,804) | (301,203) | - | - |
| 464 | | | 356 | 356 | Overhead Conductors and Devices | 5,933,882 | (200,748) | (113,074) | - | - |
| 465 | | | 357 | 357 | Underground Conduit | 18,144 | - | (3,313) | - | - |
| 466 | | | 359 | 359 | Roads and Trails | 148,292 | (1,152) | - | - | - |
| 467 | **Total Accumulated Reserve Transmission Plant** | | | | | 71,485,965 | (6,602,997) | (3,920,686) | - | - |
| 468 | | | | | | | | | | |

| | A | B | C | D | E | AK | AL | AM | AN | AO |
|---|---|---|---|---|---|---|---|---|---|---|
| 1 | **Public Service Company of New Mexico** | | | | | | | | | |
| 2 | **Schedule C-1** | | | | | | | | | |
| 3 | **Accumulated Provision for Depreciation and Amortization by Functional Classification** | | | | | | | | | |
| 4 | **Base Period Ending 6/30/2026** | | | | | | | | | |
| 5 | **Test Period Ending 9/30/2028** | | | | | | | | | |
| 6 | Link to WP Plant Lead Sheet | | | | | | | | | |
| 7 | **Base Period data is historical Information from the Company's Books and Records.** | | | | | | | | | |
| 8 | This schedule is sponsored by PNM Witness Gutierrez | | | | | | | | | |
| 9 | | | | | | | | | | |
| 10 | **Location** | **Location Number Note 2** | **FERC** | **Loc/FERC** | **FERC Description** | **Depreciation** | **Retirements** | **Removal Cost** | **Salvage** | **Other DR/CR** |
| 469 | | | | | | | | | | |
| 470 | | | | | | | | | | |
| 471 | **Accumulated Reserve Distribution Plant** | | | | | | | | | |
| 665 | **All - Distribution** | | | | | | | | | |
| 666 | | | 360 | | Land and Land Rights | - | - | (243,500) | - | - |
| 667 | | | 360.1 | | Land - Right of Way | 40,628 | - | (45,440) | - | - |
| 668 | | | 361 | | Structures and Improvements | 1,626,951 | (112,980) | (580,496) | - | - |
| 669 | | | 362 | | Station Equipment | 10,715,614 | (1,079,424) | (3,050,452) | - | - |
| 670 | | | 363.01 | | Computer Hardware | 5,417,918 | (1,392,452) | (461,133) | - | - |
| 671 | | | 363.02 | | Computer Software | 11,650,437 | - | (1,383,398) | - | - |
| 672 | | | 363.03 | | Communication Equipment | 3,221,974 | (1,467,991) | (1,807,246) | - | - |
| 673 | | | 364 | | Poles, Towers and Fixtures | 25,167,868 | (3,668,676) | (4,369,834) | - | - |
| 674 | | | 365 | | Overhead Conductors and Devices | 15,297,241 | (1,808,196) | (3,117,284) | - | - |
| 675 | | | 366 | | Underground Conduit | 4,530,484 | (562,464) | (1,701,442) | - | - |
| 676 | | | 367 | | Underground Conductors and Devices | 12,013,498 | (2,115,648) | (3,429,448) | - | - |
| 677 | | | 368 | | Line Transformers | 8,836,868 | (1,284,948) | (1,152,891) | - | - |
| 678 | | | 369 | | Services | 4,301,899 | (373,800) | (410,413) | - | - |
| 679 | | | 369.1 | | Services - Underground | 7,968,488 | (198,228) | (1,299,640) | - | - |
| 680 | | | 370 | | Meters | 2,165,088 | (6,456,912) | (437,423) | - | - |
| 681 | | | 370.4 | | Meters - Grid Mod | 3,686,559 | - | (2,766,796) | - | - |
| 682 | | | 371 | | Installations on Customers' Premises | 183,159 | - | - | - | - |
| 683 | | | 371.1 | | Leased Flood Lighting | 3,967 | - | - | - | - |
| 684 | | | 373 | | Street Lighting and Signal Systems | 1,269,758 | (260,688) | (525,250) | - | - |
| 685 | | | 374 | | Asset Retirement Costs - Distribution | - | - | - | - | - |
| 686 | **Total Accumulated Reserve Distribution Plant** | | | | | 118,098,399 | (20,782,407) | (26,782,083) | - | - |
| 687 | | | | | | | | | | |

| | A | B | C | D | E | AK | AL | AM | AN | AO |
|---|---|---|---|---|---|---|---|---|---|---|
| 1 | **Public Service Company of New Mexico** | | | | | | | | | |
| 2 | **Schedule C-1** | | | | | | | | | |
| 3 | **Accumulated Provision for Depreciation and Amortization by Functional Classification** | | | | | | | | | |
| 4 | **Base Period Ending 6/30/2026** | | | | | | | | | |
| 5 | **Test Period Ending 9/30/2028** | | | | | | | | | |
| 6 | Link to WP Plant Lead Sheet | | | | | | | | | |
| 7 | **Base Period data is historical Information from the Company's Books and Records.** | | | | | | | | | |
| 8 | This schedule is sponsored by PNM Witness Gutierrez | | | | | | | | | |
| 9 | | | | | | | | | | |
| 10 | **Location** | **Location Number Note 2** | **FERC** | **Loc/FERC** | **FERC Description** | **Depreciation** | **Retirements** | **Removal Cost** | **Salvage** | **Other DR/CR** |
| 689 | **Accumulated Reserve G&I Plant (303,389-399)** | | | | | | | | | |
| 719 | **Total General & Intangible Plant** | | | | | | | | | |
| 720 | | | 303 | 303 | Miscellaneous Intangible Plant | - | - | - | - | - |
| 721 | | | 389 | 389 | Land and Land Rights | - | - | - | - | - |
| 722 | | | 390 | 390 | Structures and Improvements | 1,096,417 | (384,996) | (203,674) | - | - |
| 723 | | | 390.1 | 390.1 | Bulk Power Office Building Remodeling | 15,461 | (25,932) | - | - | - |
| 724 | | | 390.2 | 390.2 | Bulk Power Office Building | 14,681 | - | - | - | - |
| 725 | | | 391 | 391 | Office Furniture and Equipment | 143,848 | (8,151) | (1,724) | - | - |
| 726 | | | 391.1 | 391.1 | Office Furniture and Equipment - PC System | - | - | - | - | - |
| 727 | | | 391.2 | 391.2 | Office Furniture and Equipment - PC's | - | - | - | - | - |
| 728 | | | 391.3 | 391.3 | Computer Hardware | - | - | - | - | - |
| 729 | | | 391.5 | 391.5 | Computer Hardware - Solar | - | - | - | - | - |
| 730 | | | 391.7 | 391.7 | Computer Hardware | - | - | - | - | - |
| 731 | | | 392 | 392 | Transportation Equipment - Light | 378,899 | (33,828) | (26,821) | - | - |
| 732 | | | 392.1 | 392.1 | Transportation Equipment - Heavy | 160,165 | (258,996) | (13,109) | - | - |
| 733 | | | 392.2 | 392.2 | Transportation Equipment - Trailers | 218,547 | (3,288) | (5,393) | - | - |
| 734 | | | 392.4 | 392.4 | Transportation Equipment - Leaseback | - | - | - | - | - |
| 735 | | | 393 | 393 | Stores Equipment | 4,102 | (4,131) | - | - | - |
| 736 | | | 394 | 394 | Tools, Shop & Garage Equipment | 945,927 | (490,244) | (39,041) | - | - |
| 737 | | | 395 | 395 | Laboratory Equipment | 715 | - | - | - | - |
| 738 | | | 396 | 396 | Power Operated Equipment | 350,379 | (3,240) | (5,926) | - | - |
| 739 | | | 397.01 | 397.01 | Computer Hardware | 141,497 | - | - | - | - |
| 740 | | | 397.02 | 397.02 | Computer Software | 5,704,775 | - | - | - | - |
| 741 | | | 397.03 | 397.03 | Communication Equipment | - | - | - | - | - |
| 742 | | | 398 | 398 | Miscellaneous Equipment | 97,296 | (7,819) | (44,551) | - | - |
| 743 | | | 399.1 | 399.1 | ARO General Plant-1 | 315 | - | - | - | - |
| 744 | **Total Accumulated Reserve G&I Plant - PNM** | | | | | 9,273,025 | (1,220,626) | (340,239) | - | - |
| 745 | | | | | | | | | | |
| 746 | **Total Electric Plant In Service** | | 101/106 | | | 286,318,711 | (37,728,406) | (37,083,334) | - | - |
| 747 | | | | | | | | | | |
| 748 | **Electric Plant Purchased** | | 102 | | | | | | | |
| 749 | | | | | | | | | | |
| 750 | **Electric Plant Acquisition Adjustment** | | | | Acq. Adj. - Palo Verde Unit 1&2 (Drexel) | | | | | |
| 751 | | | | | Acq. Adj. - Palo Verde Unit 2 (First Chicago) | 832,053 | - | - | | |
| 752 | | | | | Acq. Adj. - (EIP) | - | - | - | | |
| 753 | **Electric Plant Acquisition Adjustment** | | 114 | | | 832,053 | - | - | - | - |
| 754 | | | | | | | | | | |
| 755 | **Total Electric Plant** | | | | | 287,150,764 | (37,728,406) | (37,083,334) | - | - |
| 756 | | | | | | | | | | |

| | A | B | C | D | E | AK | AL | AM | AN | AO |
|---|---|---|---|---|---|---|---|---|---|---|
| 1 | **Public Service Company of New Mexico** | | | | | | | | | |
| 2 | **Schedule C-1** | | | | | | | | | |
| 3 | **Accumulated Provision for Depreciation and Amortization by Functional Classification** | | | | | | | | | |
| 4 | **Base Period Ending 6/30/2026** | | | | | | | | | |
| 5 | **Test Period Ending 9/30/2028** | | | | | | | | | |
| 6 | Link to WP Plant Lead Sheet | | | | | | | | | |
| 7 | **Base Period data is historical Information from the Company's Books and Records.** | | | | | | | | | |
| 8 | This schedule is sponsored by PNM Witness Gutierrez | | | | | | | | | |
| 9 | | | | | | | | | | |
| 10 | **Location** | **Location Number Note 2** | **FERC** | **Loc/FERC** | **FERC Description** | **Depreciation** | **Retirements** | **Removal Cost** | **Salvage** | **Other DR/CR** |
| 757 | | | | | | | | | | |
| 758 | **Corporate Unallocated** | 900 | 303 | 900303 | Miscellaneous Intangible Plant | - | - | - | | |
| 759 | | 900 | 389 | 900389 | Land and Land Rights | - | - | - | | |
| 760 | | 900 | 390 | 900390 | Structures and Improvements | 1,600,078 | (543,356) | - | | |
| 761 | | 900 | 390.1 | 900390.1 | Bulk Power Office Building Remodeling | - | - | - | | |
| 762 | | 900 | 390.2 | 900390.2 | Bulk Power Office Building | - | - | - | | |
| 763 | | 900 | 391 | 900391 | Office Furniture and Equipment | 106,146 | (6,584) | - | | |
| 764 | | 900 | 391.1 | 900391.1 | Office Furniture and Equipment - PC System | - | - | - | | |
| 765 | | 900 | 391.2 | 900391.2 | Office Furniture and Equipment - PC's | - | - | - | | |
| 766 | | 900 | 391.3 | 900391.3 | Computer Hardware | - | - | - | | |
| 767 | | 900 | 391.5 | 900391.5 | Computer Hardware - Solar | - | - | - | | |
| 768 | | 900 | 391.7 | 900391.7 | Computer Hardware | - | - | - | | |
| 769 | | 900 | 392 | 900392 | Transportation Equipment - Light | 17,991 | - | - | | |
| 770 | | 900 | 392.1 | 900392.1 | Transportation Equipment - Heavy | 2,539 | - | - | | |
| 771 | | 900 | 392.2 | 900392.2 | Transportation Equipment - Trailers | 343 | - | - | | |
| 772 | | 900 | 392.4 | 900392.4 | Transportation Equipment - Leaseback | (11) | (144) | - | | |
| 773 | | 900 | 393 | 900393 | Stores Equipment | - | - | - | | |
| 774 | | 900 | 394 | 900394 | Tools, Shop & Garage Equipment | 21,736 | - | - | | |
| 775 | | 900 | 395 | 900395 | Laboratory Equipment | - | - | - | | |
| 776 | | 900 | 396 | 900396 | Power Operated Equipment | 719 | - | - | | |
| 777 | | 900 | 397 | 900397 | Communication Equipment | - | - | - | | |
| 778 | | 900 | 397.01 | 900397.01 | Computer Hardware | 6,326,114 | (4,495,662) | - | | |
| 779 | | 900 | 397.02 | 900397.02 | Computer Software | 38,436,042 | - | - | | |
| 780 | | 900 | 397.03 | 900397.03 | Communication Equipment | 663,222 | (1,809,583) | - | | |
| 781 | | 900 | 397.2 | 900397.2 | Communication Equipment | - | - | - | | |
| 782 | | 900 | 397.3 | 900397.3 | Communication Equipment | - | - | - | | |
| 783 | | 900 | 398 | 900398 | Miscellaneous Equipment | - | - | - | | |
| 784 | | 900 | 399.1 | 900399.1 | ARO General Plant-1 | - | - | - | | |
| 785 | | | | | | | | | | |
| 786 | **Total Accumulated Reserve Corporate Plant** | | | | | 47,174,920 | (6,855,329) | - | - | - |
| 787 | | | | | | | | | | |
| 788 | **Total Electric Plant In Service - with corporate** | | 101/106 | | | 333,493,631 | (44,583,735) | (37,083,334) | - | - |
| 789 | | | | | | | | | | |
| 790 | **Electric Plant Purchased - with Corporate** | | 102 | | | | | | | |
| 791 | | | | | | | | | | |
| 792 | **Electric Plant Acq. Adj. - with Corporate** | | 114 | | | 832,053 | - | - | - | - |
| 793 | | | | | | | | | | |
| 794 | **Total Electric Plant - with Corporate** | | | | | 334,325,684 | (44,583,735) | (37,083,334) | - | - |

| | A | B | C | D | E | AP | AQ | AR | AS |
|---|---|---|---|---|---|---|---|---|---|
| 1 | **Public Service Company of New Mexico** | | | | | | | | |
| 2 | **Schedule C-1** | | | | | | | | |
| 3 | **Accumulated Provision for Depreciation and Amortization by Functional Classification** | | | | | | | | |
| 4 | **Base Period Ending 6/30/2026** | | | | | | | | |
| 5 | **Test Period Ending 9/30/2028** | | | | | | | | |
| 6 | Link to WP Plant Lead Sheet | | | | | | | | |
| 7 | **Base Period data is historical Information from the Company's Books and Records.** | | | | | | | | |
| 8 | This schedule is sponsored by PNM Witness Gutierrez | | | | | | | | |
| 9 | | | | | | | | | |
| 10 | **Location** | **Location Number Note 2** | **FERC** | **Loc/FERC** | **FERC Description** | **Test Period Ending Balance 9/30/2028** | **Test Period Adjustments** | **Adjusted Test Period Ending Balance 9/30/2028** | **Reference** |
| 11 | | | | | | | | | |
| 12 | **Production Plant** | | | | | | | | |
| 13 | **Steam Production** | | | | | | | | |
| 56 | **All - Steam** | | | | | | | | |
| 57 | | | 310 | | Land and Land Rights | - | - | - | |
| 58 | | | 310.1 | | Land Right of Way | 19,053 | (166) | 18,887 | |
| 59 | | | 311 | | Structures & Improvements | 7,774,209 | 68,834 | 7,843,043 | |
| 60 | | | 312 | | Boiler Plant Equipment | 93,478,356 | 499,535 | 93,977,891 | |
| 61 | | | 314 | | Turbogenerator Units | 40,379,455 | (382,277) | 39,997,178 | |
| 62 | | | 315 | | Accessory Electric Equipment | 10,975,485 | (77,163) | 10,898,322 | |
| 63 | | | 315.01 | | Computer Hardware | - | - | - | |
| 64 | | | 315.02 | | Computer Software | 1,082,857 | (97,308) | 985,549 | |
| 65 | | | 315.03 | | Communication Equipment | 243,735 | (11,577) | 232,158 | |
| 66 | | | 316 | | Misc Power Plant Equipment | 6,209,520 | (34,259) | 6,175,261 | |
| 67 | | | 317 | | Asset Retirement Costs - Steam | 3,522,440 | 56,941 | 3,579,381 | |
| 68 | **Total Steam Production Accumulated Reserve** | | | | | 163,685,111 | 22,558 | 163,707,669 | |
| 69 | | | | | | | | | |
| 70 | | | | | | | | | |
| 71 | **Nuclear Production** | | | | | | | | |
| 129 | **All - Nuclear** | | | | | | | | |
| 130 | | | 320 | | Land and Land Rights | 0 | - | 0 | |
| 131 | | | 320.1 | | Land - Right of Way | 31,467 | (349) | 31,117 | |
| 132 | | | 321 | | Structures and Improvements | 122,062,821 | (2,380,905) | 119,681,916 | |
| 133 | | | 322 | | Reactor Plant Equipment | 191,504,758 | (3,647,408) | 187,857,350 | |
| 134 | | | 323 | | Turbogenerator Units | 66,983,160 | (1,250,840) | 65,732,320 | |
| 135 | | | 324 | | Accessory Electric Equipment | 45,563,177 | (424,662) | 45,138,515 | |
| 136 | | | 324.01 | | Computer Hardware | - | - | - | |
| 137 | | | 324.02 | | Computer Software | 8,432,393 | (1,211,202) | 7,221,192 | |
| 138 | | | 324.03 | | Communication Equipment | 243,025 | (14,424) | 228,601 | |
| 139 | | | 325 | | Misc Power Plant Equipment | 42,348,545 | (973,699) | 41,374,846 | |
| 140 | | | 326 | | Asset Retirement Costs Nuclear Prod Plant | 301,992 | (67,109) | 234,883 | |
| 141 | **Total Nuclear Production Gross Accumulated Reserve** | | | | | 477,471,338 | (9,970,598) | 467,500,740 | |
| 142 | | | | | | | | | |
| 143 | | | | | | | | | |

| | A | B | C | D | E | AP | AQ | AR | AS |
|---|---|---|---|---|---|---|---|---|---|
| 1 | **Public Service Company of New Mexico** | | | | | | | | |
| 2 | **Schedule C-1** | | | | | | | | |
| 3 | **Accumulated Provision for Depreciation and Amortization by Functional Classification** | | | | | | | | |
| 4 | **Base Period Ending 6/30/2026** | | | | | | | | |
| 5 | **Test Period Ending 9/30/2028** | | | | | | | | |
| 6 | Link to WP Plant Lead Sheet | | | | | | | | |
| 7 | **Base Period data is historical Information from the Company's Books and Records.** | | | | | | | | |
| 8 | This schedule is sponsored by PNM Witness Gutierrez | | | | | | | | |
| 9 | | | | | | | | | |
| 10 | **Location** | **Location Number Note 2** | **FERC** | **Loc/FERC** | **FERC Description** | **Test Period Ending Balance 9/30/2028** | **Test Period Adjustments** | **Adjusted Test Period Ending Balance 9/30/2028** | **Reference** |
| 144 | **Solar Production** | | | | | | | | |
| 237 | **All - Solar** | | | | | | | | |
| 238 | | | 338.01 | | Land & Land Rights | - | - | - | |
| 239 | | | 338.02 | | Structures and Improvements | 133,188 | (4,567) | 128,621 | |
| 240 | | | 338.04 | | Solar Panels | 134,250,633 | (7,354,428) | 126,896,205 | |
| 241 | | | 338.05 | | Collector System | 2,825,402 | (157,304) | 2,668,098 | |
| 242 | | | 338.07 | | Solar Inverters | 1,006,746 | (361,413) | 645,333 | |
| 243 | | | 338.08 | | Other Accessory Electrical Equipment | 13,758,267 | (413,997) | 13,344,270 | |
| 244 | | | 338.09 | | Computer Hardware | 34,986 | (4,984) | 30,002 | |
| 245 | | | 338.10 | | Computer Software | - | - | - | |
| 246 | | | 338.11 | | Communication Equipment | 262,073 | (17,860) | 244,214 | |
| 247 | | | 338.12 | | Misc. Power Plant Equipment | 2,229,977 | (82,969) | 2,147,008 | |
| 248 | **Total Solar Production Gross Accumulated Reserve** | | | | | 154,501,271 | (8,397,521) | 146,103,751 | |
| 249 | | | | | | | | | |
| 250 | **Other Production** | | | | | | | | |
| 251 | | | | | | | | | |
| 252 | **Other Production - Gas:** | | | | | | | | |
| 339 | **All - Gas** | | 340 | | Land and Land Rights | - | - | - | |
| 340 | | | 340.1 | | Land - Right of Way | 913,428 | (37,725) | 875,703 | |
| 341 | | | 341 | | Structures and Improvements | 47,636,415 | (1,190,306) | 46,446,110 | |
| 342 | | | 342 | | Fuel Holders, Producers, Accessories | 65,295,978 | (2,271,824) | 63,024,155 | |
| 343 | | | 343 | | Prime Movers | - | - | - | |
| 344 | | | 344 | | Generators | 113,088,752 | (4,606,742) | 108,482,010 | |
| 345 | | | 345 | | Accessory Electric Equipment | 10,661,498 | (661,774) | 9,999,724 | |
| 346 | | | 345.01 | | Computer Hardware | (4,487) | - | (4,487) | |
| 347 | | | 345.02 | | Computer Software | 57,682 | (62) | 57,619 | |
| 348 | | | 345.03 | | Communication Equipment | 11,158 | (1,290) | 9,868 | |
| 349 | | | 346 | | Misc Power Plant Equipment | 13,648,037 | (951,790) | 12,696,246 | |
| 350 | | | 347 | | Asset Retirement Costs - Other Production | 1,862,150 | (152,837) | 1,709,313 | |
| 351 | **Total Other Production Plant - Gas** | | | | | 253,170,611 | (9,874,350) | 243,296,261 | |
| 352 | | | | | | | | | |
| 353 | | | | | | | | | |
| 354 | **Total Other Production Accumulated Reserve** | | | | | 407,671,883 | (18,271,871) | 389,400,012 | |
| 355 | | | | | | | | | |
| 356 | **Total Accumulated Reserve Production** | | | | | 1,048,828,331 | (28,219,910) | 1,020,608,421 | |

| | A | B | C | D | E | AP | AQ | AR | AS |
|---|---|---|---|---|---|---|---|---|---|
| 1 | **Public Service Company of New Mexico** | | | | | | | | |
| 2 | **Schedule C-1** | | | | | | | | |
| 3 | **Accumulated Provision for Depreciation and Amortization by Functional Classification** | | | | | | | | |
| 4 | **Base Period Ending 6/30/2026** | | | | | | | | |
| 5 | **Test Period Ending 9/30/2028** | | | | | | | | |
| 6 | Link to WP Plant Lead Sheet | | | | | | | | |
| 7 | **Base Period data is historical Information from the Company's Books and Records.** | | | | | | | | |
| 8 | This schedule is sponsored by PNM Witness Gutierrez | | | | | | | | |
| 9 | | | | | | | | | |
| 10 | **Location** | **Location Number Note 2** | **FERC** | **Loc/FERC** | **FERC Description** | **Test Period Ending Balance 9/30/2028** | **Test Period Adjustments** | **Adjusted Test Period Ending Balance 9/30/2028** | **Reference** |
| 357 | | | | | | | | | |
| 358 | | | | | | | | | |
| 359 | **Accumulated Reserve Battery Storage Plant** | | | | | | | | |
| 386 | **All - Energy Storage** | | 387.01 | 387.01 | Land & Land Rights | - | - | - | |
| 387 | | | 387.02 | 387.02 | Structures & Improvements | 2,146,670 | (611,852) | 1,534,817 | |
| 388 | | | 387.03 | 387.03 | Energy Storage Equipment | 16,871,176 | (5,020,532) | 11,850,644 | |
| 389 | | | 387.05 | 387.05 | Collector System | 2,531,993 | (676,458) | 1,855,535 | |
| 390 | | | 387.06 | 387.06 | Generator Step-Up Transformers (GSU) | 5,479,142 | (1,561,553) | 3,917,590 | |
| 391 | | | 387.07 | 387.07 | Inverters | - | - | - | |
| 392 | | | 387.08 | 387.08 | Computer Hardware | 2,214,685 | (438,825) | 1,775,860 | |
| 393 | | | 387.09 | 387.09 | Computer Software | 595,458 | (77,212) | 518,246 | |
| 394 | | | 387.10 | 387.10 | Communication Equipment | 160,233 | (45,684) | 114,548 | |
| 395 | | | 387.11 | 387.11 | Misc. Energy Storage Equipment | 2,612,224 | (265,477) | 2,346,747 | |
| 396 | | | 387.12 | 387.12 | Asset Retirement Costs for Energy Storage | - | - | - | |
| 397 | **Total Accumulated Reserve Energy Storage Plant** | | | | | 32,611,580 | (8,697,594) | 23,913,987 | |
| 398 | | | | | | | | | |
| 399 | | | | | | | | | |
| 400 | **Accumulated Reserve Transmission Plant** | | | | | | | | |
| 453 | **All - Transmission** | | | | | | | | |
| 454 | | | 350 | 350 | Land and Land Rights | 6,128,668 | 28,733 | 6,157,402 | |
| 455 | | | 350.1 | 350.1 | Land - Right of Way | 27,024,114 | (256,852) | 26,767,262 | |
| 456 | | | 351.01 | 351.01 | Computer Hardware | 11,984,017 | (2,430,240) | 9,553,776 | |
| 457 | | | 351.02 | 351.02 | Computer Software | 7,948,093 | (769,772) | 7,178,321 | |
| 458 | | | 351.03 | 351.03 | Communication Equipment | 22,094,128 | (925,236) | 21,168,892 | |
| 459 | | | 352 | 352 | Structures and Improvements | 35,127,582 | (2,482,717) | 32,644,865 | |
| 460 | | | 353 | 353 | Station Equipment | 284,211,825 | (11,837,018) | 272,374,807 | |
| 461 | | | 353.1 | 353.1 | Station Equipment - Step-up Xfmr and Aux | 7,287,290 | (136,951) | 7,150,339 | |
| 462 | | | 354 | 354 | Towers and Fixtures | 48,940,496 | (101,944) | 48,838,553 | |
| 463 | | | 355 | 355 | Poles and Fixtures | 176,343,691 | (8,367,685) | 167,976,006 | |
| 464 | | | 356 | 356 | Overhead Conductors and Devices | 114,062,128 | (2,823,518) | 111,238,611 | |
| 465 | | | 357 | 357 | Underground Conduit | 28,681 | (7,714) | 20,967 | |
| 466 | | | 359 | 359 | Roads and Trails | 3,396,579 | (73,569) | 3,323,010 | |
| 467 | **Total Accumulated Reserve Transmission Plant** | | | | | 744,577,293 | (30,184,483) | 714,392,810 | |
| 468 | | | | | | | | | |

| | A | B | C | D | E | AP | AQ | AR | AS |
|---|---|---|---|---|---|---|---|---|---|
| 1 | **Public Service Company of New Mexico** | | | | | | | | |
| 2 | **Schedule C-1** | | | | | | | | |
| 3 | **Accumulated Provision for Depreciation and Amortization by Functional Classification** | | | | | | | | |
| 4 | **Base Period Ending 6/30/2026** | | | | | | | | |
| 5 | **Test Period Ending 9/30/2028** | | | | | | | | |
| 6 | Link to WP Plant Lead Sheet | | | | | | | | |
| 7 | **Base Period data is historical Information from the Company's Books and Records.** | | | | | | | | |
| 8 | This schedule is sponsored by PNM Witness Gutierrez | | | | | | | | |
| 9 | | | | | | | | | |
| 10 | **Location** | **Location Number Note 2** | **FERC** | **Loc/FERC** | **FERC Description** | **Test Period Ending Balance 9/30/2028** | **Test Period Adjustments** | **Adjusted Test Period Ending Balance 9/30/2028** | **Reference** |
| 469 | | | | | | | | | |
| 470 | | | | | | | | | |
| 471 | **Accumulated Reserve Distribution Plant** | | | | | | | | |
| 665 | **All - Distribution** | | | | | | | | |
| 666 | | | 360 | | Land and Land Rights | (10,211) | 217,068 | 206,856 | |
| 667 | | | 360.1 | | Land - Right of Way | 1,147,744 | 21,630 | 1,169,374 | |
| 668 | | | 361 | | Structures and Improvements | 14,492,904 | (426,280) | 14,066,625 | |
| 669 | | | 362 | | Station Equipment | 120,936,304 | (2,960,512) | 117,975,792 | |
| 670 | | | 363.01 | | Computer Hardware | 8,225,871 | (2,294,317) | 5,931,554 | |
| 671 | | | 363.02 | | Computer Software | 36,644,572 | (5,424,038) | 31,220,534 | |
| 672 | | | 363.03 | | Communication Equipment | 7,956,016 | 177,440 | 8,133,456 | |
| 673 | | | 364 | | Poles, Towers and Fixtures | 129,263,790 | (8,634,573) | 120,629,217 | |
| 674 | | | 365 | | Overhead Conductors and Devices | 133,472,046 | (5,236,475) | 128,235,571 | |
| 675 | | | 366 | | Underground Conduit | 79,157,377 | (1,166,090) | 77,991,287 | |
| 676 | | | 367 | | Underground Conductors and Devices | 160,850,103 | (3,114,755) | 157,735,349 | |
| 677 | | | 368 | | Line Transformers | 138,836,368 | (3,251,544) | 135,584,825 | |
| 678 | | | 369 | | Services | 59,665,058 | (1,803,819) | 57,861,239 | |
| 679 | | | 369.1 | | Services - Underground | 96,596,748 | (3,380,248) | 93,216,500 | |
| 680 | | | 370 | | Meters | 7,086,056 | (979,795) | 6,106,261 | |
| 681 | | | 370.4 | | Meters - Grid Mod | (906,246) | (770,631) | (1,676,876) | |
| 682 | | | 371 | | Installations on Customers' Premises | 9,031,747 | (91,579) | 8,940,167 | |
| 683 | | | 371.1 | | Leased Flood Lighting | 279,715 | (1,984) | 277,732 | |
| 684 | | | 373 | | Street Lighting and Signal Systems | 13,914,322 | (285,136) | 13,629,186 | |
| 685 | | | 374 | | Asset Retirement Costs - Distribution | - | - | - | |
| 686 | **Total Accumulated Reserve Distribution Plant** | | | | | 1,016,640,285 | (39,405,636) | 977,234,648 | |
| 687 | | | | | | | | | |

| | A | B | C | D | E | AP | AQ | AR | AS |
|---|---|---|---|---|---|---|---|---|---|
| 1 | **Public Service Company of New Mexico** | | | | | | | | |
| 2 | **Schedule C-1** | | | | | | | | |
| 3 | **Accumulated Provision for Depreciation and Amortization by Functional Classification** | | | | | | | | |
| 4 | **Base Period Ending 6/30/2026** | | | | | | | | |
| 5 | **Test Period Ending 9/30/2028** | | | | | | | | |
| 6 | Link to WP Plant Lead Sheet | | | | | | | | |
| 7 | **Base Period data is historical Information from the Company's Books and Records.** | | | | | | | | |
| 8 | This schedule is sponsored by PNM Witness Gutierrez | | | | | | | | |
| 9 | | | | | | | | | |
| 10 | **Location** | **Location Number Note 2** | **FERC** | **Loc/FERC** | **FERC Description** | **Test Period Ending Balance 9/30/2028** | **Test Period Adjustments** | **Adjusted Test Period Ending Balance 9/30/2028** | **Reference** |
| 688 | | | | | | | | | |
| 689 | **Accumulated Reserve G&I Plant (303,389-399)** | | | | | | | | |
| 719 | **Total General & Intangible Plant** | | | | | | | | |
| 720 | | | 303 | 303 | Miscellaneous Intangible Plant | - | - | - | |
| 721 | | | 389 | 389 | Land and Land Rights | - | - | - | |
| 722 | | | 390 | 390 | Structures and Improvements | 31,304,551 | (252,232) | 31,052,319 | |
| 723 | | | 390.1 | 390.1 | Bulk Power Office Building Remodeling | 5,696,539 | 5,239 | 5,701,777 | |
| 724 | | | 390.2 | 390.2 | Bulk Power Office Building | 5,860,806 | (7,340) | 5,853,466 | |
| 725 | | | 391 | 391 | Office Furniture and Equipment | 3,105,575 | (69,238) | 3,036,336 | |
| 726 | | | 391.1 | 391.1 | Office Furniture and Equipment - PC System | - | - | - | |
| 727 | | | 391.2 | 391.2 | Office Furniture and Equipment - PC's | - | - | - | |
| 728 | | | 391.3 | 391.3 | Computer Hardware | - | - | - | |
| 729 | | | 391.5 | 391.5 | Computer Hardware - Solar | - | - | - | |
| 730 | | | 391.7 | 391.7 | Computer Hardware | - | - | - | |
| 731 | | | 392 | 392 | Transportation Equipment - Light | 2,641,847 | (168,997) | 2,472,851 | |
| 732 | | | 392.1 | 392.1 | Transportation Equipment - Heavy | 3,372,211 | 52,585 | 3,424,796 | |
| 733 | | | 392.2 | 392.2 | Transportation Equipment - Trailers | 4,007,488 | (106,587) | 3,900,900 | |
| 734 | | | 392.4 | 392.4 | Transportation Equipment - Leaseback | - | - | - | |
| 735 | | | 393 | 393 | Stores Equipment | 89,933 | 824 | 90,757 | |
| 736 | | | 394 | 394 | Tools, Shop & Garage Equipment | 9,993,205 | (112,905) | 9,880,301 | |
| 737 | | | 395 | 395 | Laboratory Equipment | 146,989 | (358) | 146,631 | |
| 738 | | | 396 | 396 | Power Operated Equipment | 4,698,802 | (171,868) | 4,526,935 | |
| 739 | | | 397.01 | 397.01 | Computer Hardware | 629,725 | (70,812) | 558,913 | |
| 740 | | | 397.02 | 397.02 | Computer Software | 31,068,525 | (2,904,228) | 28,164,297 | |
| 741 | | | 397.03 | 397.03 | Communication Equipment | - | - | - | |
| 742 | | | 398 | 398 | Miscellaneous Equipment | 1,321,086 | (10,243) | 1,310,844 | |
| 743 | | | 399.1 | 399.1 | ARO General Plant-1 | 17,209 | (158) | 17,051 | |
| 744 | **Total Accumulated Reserve G&I Plant - PNM** | | | | | 103,954,492 | (3,816,318) | 100,138,174 | |
| 745 | | | | | | | | | |
| 746 | **Total Electric Plant In Service** | | 101/106 | | | 2,946,611,981 | (110,323,941) | 2,836,288,040 | |
| 747 | | | | | | | | | |
| 748 | **Electric Plant Purchased** | | 102 | | | | | | |
| 749 | | | | | | | | | |
| 750 | **Electric Plant Acquisition Adjustment** | | | | Acq. Adj. - Palo Verde Unit 1&2 (Drexel) | | | | |
| 751 | | | | | Acq. Adj. - Palo Verde Unit 2 (First Chicago) | 1,664,106 | - | 1,664,106 | |
| 752 | | | | | Acq. Adj. - (EIP) | - | - | - | |
| 753 | **Electric Plant Acquisition Adjustment** | | 114 | | | 1,664,106 | - | 1,664,106 | |
| 754 | | | | | | | | | |
| 755 | **Total Electric Plant** | | | | | 2,948,276,087 | (110,323,941) | 2,837,952,146 | |
| 756 | | | | | | | | | |

| | A | B | C | D | E | AP | AQ | AR | AS |
|---|---|---|---|---|---|---|---|---|---|
| 1 | **Public Service Company of New Mexico** | | | | | | | | |
| 2 | **Schedule C-1** | | | | | | | | |
| 3 | **Accumulated Provision for Depreciation and Amortization by Functional Classification** | | | | | | | | |
| 4 | **Base Period Ending 6/30/2026** | | | | | | | | |
| 5 | **Test Period Ending 9/30/2028** | | | | | | | | |
| 6 | Link to WP Plant Lead Sheet | | | | | | | | |
| 7 | **Base Period data is historical Information from the Company's Books and Records.** | | | | | | | | |
| 8 | This schedule is sponsored by PNM Witness Gutierrez | | | | | | | | |
| 9 | | | | | | | | | |
| 10 | **Location** | **Location Number Note 2** | **FERC** | **Loc/FERC** | **FERC Description** | **Test Period Ending Balance 9/30/2028** | **Test Period Adjustments** | **Adjusted Test Period Ending Balance 9/30/2028** | **Reference** |
| 757 | | | | | | | | | |
| 758 | **Corporate Unallocated** | 900 | 303 | 900303 | Miscellaneous Intangible Plant | - | - | - | |
| 759 | | 900 | 389 | 900389 | Land and Land Rights | (66,097) | 20,814 | (45,283) | |
| 760 | | 900 | 390 | 900390 | Structures and Improvements | 25,186,809 | (8,052,347) | 17,134,462 | |
| 761 | | 900 | 390.1 | 900390.1 | Bulk Power Office Building Remodeling | - | - | - | |
| 762 | | 900 | 390.2 | 900390.2 | Bulk Power Office Building | - | - | - | |
| 763 | | 900 | 391 | 900391 | Office Furniture and Equipment | 494,892 | (207,882) | 287,010 | |
| 764 | | 900 | 391.1 | 900391.1 | Office Furniture and Equipment - PC System | - | - | - | |
| 765 | | 900 | 391.2 | 900391.2 | Office Furniture and Equipment - PC's | - | - | - | |
| 766 | | 900 | 391.3 | 900391.3 | Computer Hardware | - | - | - | |
| 767 | | 900 | 391.5 | 900391.5 | Computer Hardware - Solar | - | - | - | |
| 768 | | 900 | 391.7 | 900391.7 | Computer Hardware | - | - | - | |
| 769 | | 900 | 392 | 900392 | Transportation Equipment - Light | 182,591 | (74,337) | 108,254 | |
| 770 | | 900 | 392.1 | 900392.1 | Transportation Equipment - Heavy | 19,889 | (7,133) | 12,757 | |
| 771 | | 900 | 392.2 | 900392.2 | Transportation Equipment - Trailers | 7,689 | (3,001) | 4,688 | |
| 772 | | 900 | 392.4 | 900392.4 | Transportation Equipment - Leaseback | (339) | 176 | (163) | |
| 773 | | 900 | 393 | 900393 | Stores Equipment | - | - | - | |
| 774 | | 900 | 394 | 900394 | Tools, Shop & Garage Equipment | 181,875 | (72,017) | 109,858 | |
| 775 | | 900 | 395 | 900395 | Laboratory Equipment | - | - | - | |
| 776 | | 900 | 396 | 900396 | Power Operated Equipment | 22,867 | (7,447) | 15,420 | |
| 777 | | 900 | 397 | 900397 | Communication Equipment | - | - | - | |
| 778 | | 900 | 397.01 | 900397.01 | Computer Hardware | 16,852,971 | (7,039,055) | 9,813,916 | |
| 779 | | 900 | 397.02 | 900397.02 | Computer Software | 193,527,877 | (76,086,432) | 117,441,445 | |
| 780 | | 900 | 397.03 | 900397.03 | Communication Equipment | 2,278,142 | (263,516) | 2,014,626 | |
| 781 | | 900 | 397.2 | 900397.2 | Communication Equipment | - | - | - | |
| 782 | | 900 | 397.3 | 900397.3 | Communication Equipment | - | - | - | |
| 783 | | 900 | 398 | 900398 | Miscellaneous Equipment | - | - | - | |
| 784 | | 900 | 399.1 | 900399.1 | ARO General Plant-1 | - | - | - | |
| 785 | | | | | | | | | |
| 786 | **Total Accumulated Reserve Corporate Plant** | | | | | 238,689,168 | (91,792,177) | 146,896,991 | |
| 787 | | | | | | | | | |
| 788 | **Total Electric Plant In Service - with corporate** | | 101/106 | | | 3,185,301,149 | (202,116,118) | 2,983,185,031 | |
| 789 | | | | | | | | | |
| 790 | **Electric Plant Purchased - with Corporate** | | 102 | | | | | | |
| 791 | | | | | | | | | |
| 792 | **Electric Plant Acq. Adj. - with Corporate** | | 114 | | | 1,664,106 | - | 1,664,106 | |
| 793 | | | | | | | | | |
| 794 | **Total Electric Plant - with Corporate** | | | | | 3,186,965,256 | (202,116,118) | 2,984,849,138 | |

| | A |
|---|---|
| 1 | **Public Service Company of New Mexico** |
| 2 | **Schedule C-1 (Notes)** |
| 3 | **Accumulated Provision for Depreciation and Amortization by Functional Classification** |
| 4 | **Base Period Ending 6/30/2026** |
| 5 | **Test Period Ending 9/30/2028** |
| 6 | Link to WP Plant Lead |
| 7 | |
| 8 | **Note 1**: FERC accounts 365 (Overhead Conductors and Devices), 366 (Underground Conduit) and 367 (Underground Conductors and Devices) are allocated between Primary and Secondary System Distribution based on conductor footage study. See WP Plant -1 for allocation percentages. Also see the Direct Testimony of PNM Witness Gray for further discussion on the conductor footage study. This note relates to information grouped within the outline function and is not visible on the printed schedule. |
| 9 | **Note 2**: Information in Column B "Location Number" is utilized to identify the applicable depreciation rates. |
| 10 | |
| 11 | **General Notes:** |
| 12 | The electronic version of this worksheet uses the Microsoft excel outline function. This function groups the elements of cost, and or columns for print formatting purposes. |

| | A | B | C | D | E | F | G | H |
|---|---|---|---|---|---|---|---|---|
| 1 | **Public Service Company of New Mexico** | | | | | | | |
| 2 | **Schedule C-1 a** | | | | | | | |
| 3 | **Accumulated Provision for Depreciation and Amortization by Functional Classification** | | | | | | | |
| 4 | **Base Period Ending 6/30/2026** | | | | | | | |
| 5 | **Test Period Ending 9/30/2028** | | | | | | | |
| 6 | Link to WP Plant Lead Sheet | | | | | | | |
| 7 | Base Period data is historical Information from the Company's Books and Records. | | | | | | | |
| 8 | **This schedule is sponsored by PNM Witness Gutierrez** | | | | | | | |
| 9 | Please see the Direct Testimony of PNM Witness Gutierrez for discussion of adjustments/changes to the Base Period, Test Period, and Linkage Data. | | | | | | | |
| 10 | **Description** | **Location Number Note 6** | **FERC** | **Loc/FERC** | **FERC Description** | **Base Period Beginning Balance 7/1/25** | **Balance 8/1/25** | **Balance 9/1/25** |
| 11 | | | | | | | | |
| 12 | **Accumulated Depreciation Production Plant** | | | | | | | |
| 13 | **Steam Production** | | | | | | | |
| 56 | **All - Steam** | | | | | | | |
| 57 | | | 310 | | Land and Land Rights | - | - | - |
| 58 | | | 310.1 | | Land Right of Way | 17,794 | 17,833 | 17,872 |
| 59 | | | 311 | | Structures & Improvements | 8,200,439 | 8,260,554 | 8,320,679 |
| 60 | | | 312 | | Boiler Plant Equipment | 88,517,666 | 88,910,572 | 89,467,473 |
| 61 | | | 314 | | Turbogenerator Units | 34,914,914 | 35,125,627 | 35,351,469 |
| 62 | | | 315 | | Accessory Electric Equipment | 9,726,119 | 9,783,724 | 9,841,335 |
| 63 | | | 315.01 | | Computer Hardware | - | - | - |
| 64 | | | 315.02 | | Computer Software | 333,186 | 355,712 | 378,238 |
| 65 | | | 315.03 | | Communication Equipment | 170,196 | 172,054 | 173,912 |
| 66 | | | 316 | | Misc Power Plant Equipment | 5,248,165 | 5,335,373 | 5,422,714 |
| 67 | | | 317 | | Asset Retirement Costs - Steam | 3,671,960 | 3,705,021 | 3,738,082 |
| 68 | **Total Steam Production Accumulated Reserve** | | | | | 150,800,440 | 151,666,472 | 152,711,774 |
| 69 | | | | | | | | |
| 70 | | | | | | | | |
| 71 | **Nuclear Production** | | | | | | | |
| 129 | **All - Nuclear** | | | | | | | |
| 130 | | | 320 | | Land and Land Rights | 0 | 0 | 0 |
| 131 | | | 320.1 | | Land - Right of Way | 29,265 | 29,321 | 29,377 |
| 132 | | | 321 | | Structures and Improvements | 108,615,871 | 108,986,615 | 109,357,386 |
| 133 | | | 322 | | Reactor Plant Equipment | 168,121,098 | 168,765,010 | 169,410,722 |
| 134 | | | 323 | | Turbogenerator Units | 59,946,426 | 60,172,823 | 60,400,235 |
| 135 | | | 324 | | Accessory Electric Equipment | 42,259,258 | 42,340,524 | 42,422,141 |
| 136 | | | 324.01 | | Computer Hardware | - | - | - |
| 137 | | | 324.02 | | Computer Software | 2,485,541 | 2,575,346 | 2,649,619 |
| 138 | | | 324.03 | | Communication Equipment | 208,733 | 211,099 | 213,464 |
| 139 | | | 325 | | Misc Power Plant Equipment | 36,540,897 | 36,693,677 | 36,847,101 |
| 140 | | | 326 | | Asset Retirement Costs Nuclear Prod Plant | 2,966,848 | 2,978,033 | 2,989,218 |
| 141 | **Total Nuclear Production Accumulated Reserve** | | | | | 421,173,938 | 422,752,448 | 424,319,262 |
| 142 | | | | | | | | |
| 143 | | | | | | | | |

| | A | B | C | D | E | F | G | H |
|---|---|---|---|---|---|---|---|---|
| 1 | **Public Service Company of New Mexico** | | | | | | | |
| 2 | **Schedule C-1 a** | | | | | | | |
| 3 | **Accumulated Provision for Depreciation and Amortization by Functional Classification** | | | | | | | |
| 4 | **Base Period Ending 6/30/2026** | | | | | | | |
| 5 | **Test Period Ending 9/30/2028** | | | | | | | |
| 6 | Link to WP Plant Lead Sheet | | | | | | | |
| 7 | Base Period data is historical Information from the Company's Books and Records. | | | | | | | |
| 8 | **This schedule is sponsored by PNM Witness Gutierrez** | | | | | | | |
| 9 | Please see the Direct Testimony of PNM Witness Gutierrez for discussion of adjustments/changes to the Base Period, Test Period, and Linkage Data. | | | | | | | |
| 10 | **Description** | **Location Number Note 6** | **FERC** | **Loc/FERC** | **FERC Description** | **Base Period Beginning Balance 7/1/25** | **Balance 8/1/25** | **Balance 9/1/25** |
| 144 | **Solar Production** | | | | | | | |
| 237 | **All - Solar** | | | | | | | |
| 238 | | | 338.01 | | Land & Land Rights | - | - | - |
| 239 | | | 338.02 | | Structures and Improvements | 103,505 | 104,266 | 105,027 |
| 240 | | | 338.04 | | Solar Panels | 98,717,428 | 99,489,513 | 100,261,599 |
| 241 | | | 338.05 | | Collector System | 1,794,772 | 1,818,671 | 1,842,570 |
| 242 | | | 338.07 | | Solar Inverters | - | - | - |
| 243 | | | 338.08 | | Other Accessory Electrical Equipment | 10,733,640 | 10,828,768 | 10,923,896 |
| 244 | | | 338.09 | | Computer Hardware | 1,725 | 2,588 | 3,451 |
| 245 | | | 338.10 | | Computer Software | - | - | - |
| 246 | | | 338.11 | | Communication Equipment | 129,696 | 133,323 | 136,951 |
| 247 | | | 338.12 | | Misc. Power Plant Equipment | 1,689,110 | 1,702,996 | 1,716,882 |
| 248 | **Total Solar Production Accumulated Reserve** | | | | | 113,169,876 | 114,080,125 | 114,990,375 |
| 249 | | | | | | | | |
| 250 | **Other Production** | | | | | | | |
| 251 | | | | | | | | |
| 252 | **Other Production - Gas:** | | | | | | | |
| 339 | **All - Gas** | | 340 | | Land and Land Rights | - | - | - |
| 340 | | | 340.1 | | Land - Right of Way | 679,071 | 684,957 | 690,842 |
| 341 | | | 341 | | Structures and Improvements | 40,487,361 | 40,732,744 | 40,978,168 |
| 342 | | | 342 | | Fuel Holders, Producers, Accessories | 53,831,009 | 54,139,971 | 54,452,234 |
| 343 | | | 343 | | Prime Movers | - | - | - |
| 344 | | | 344 | | Generators | 91,730,025 | 92,472,695 | 93,217,974 |
| 345 | | | 345 | | Accessory Electric Equipment | 7,250,320 | 7,348,869 | 7,447,420 |
| 346 | | | 345.01 | | Computer Hardware | 38,621 | 38,621 | 38,621 |
| 347 | | | 345.02 | | Computer Software | 38,731 | 40,693 | 42,654 |
| 348 | | | 345.03 | | Communication Equipment | 3,037 | 3,253 | 3,469 |
| 349 | | | 346 | | Misc Power Plant Equipment | 10,585,386 | 10,712,522 | 10,840,081 |
| 350 | | | 347 | | Asset Retirement Costs - Other Production | 952,080 | 960,879 | 969,678 |
| 351 | **Total Other Production Plant - Gas** | | | | | 205,595,642 | 207,135,203 | 208,681,140 |
| 352 | | | | | | | | |
| 353 | | | | | | | | |
| 354 | **Total Other Production Accumulated Reserve** | | | | | 205,595,642 | 207,135,203 | 208,681,140 |

| | A | B | C | D | E | F | G | H |
|---|---|---|---|---|---|---|---|---|
| 1 | **Public Service Company of New Mexico** | | | | | | | |
| 2 | **Schedule C-1 a** | | | | | | | |
| 3 | **Accumulated Provision for Depreciation and Amortization by Functional Classification** | | | | | | | |
| 4 | **Base Period Ending 6/30/2026** | | | | | | | |
| 5 | **Test Period Ending 9/30/2028** | | | | | | | |
| 6 | Link to WP Plant Lead Sheet | | | | | | | |
| 7 | Base Period data is historical Information from the Company's Books and Records. | | | | | | | |
| 8 | **This schedule is sponsored by PNM Witness Gutierrez** | | | | | | | |
| 9 | Please see the Direct Testimony of PNM Witness Gutierrez for discussion of adjustments/changes to the Base Period, Test Period, and Linkage Data. | | | | | | | |
| 10 | **Description** | **Location Number Note 6** | **FERC** | **Loc/FERC** | **FERC Description** | **Base Period Beginning Balance 7/1/25** | **Balance 8/1/25** | **Balance 9/1/25** |
| 355 | | | | | | | | |
| 356 | **Total Accumulated Reserve Production** | | | | | 890,739,895 | 895,634,249 | 900,702,551 |
| 357 | | | | | | | | |
| 358 | | | | | | | | |
| 359 | **Accumulated Energy Storage Plant** | | | | | | | |
| 386 | **All - Energy Storage** | | 387.01 | 387.01 | Land & Land Rights | - | - | - |
| 387 | | | 387.02 | 387.02 | Structures & Improvements | 5,170 | 6,893 | 8,616 |
| 388 | | | 387.03 | 387.03 | Energy Storage Equipment | 3,766,569 | 3,809,538 | 3,852,507 |
| 389 | | | 387.05 | 387.05 | Collector System | 37,370 | 49,826 | 62,283 |
| 390 | | | 387.06 | 387.06 | Generator Step-Up Transformers (GSU) | 13,259 | 17,678 | 22,098 |
| 391 | | | 387.07 | 387.07 | Inverters | - | - | - |
| 392 | | | 387.08 | 387.08 | Computer Hardware | - | - | - |
| 393 | | | 387.09 | 387.09 | Computer Software | 121,001 | 131,085 | 141,168 |
| 394 | | | 387.10 | 387.10 | Communication Equipment | 4,224 | 5,632 | 7,040 |
| 395 | | | 387.11 | 387.11 | Misc. Energy Storage Equipment | 1,626,586 | 1,638,278 | 1,649,971 |
| 396 | | | 387.12 | 387.12 | Asset Retirement Costs for Energy Storage | - | - | - |
| 397 | **Total Energy Storage Plant** | | | | | 5,574,178 | 5,658,930 | 5,743,682 |
| 398 | | | | | | | | |
| 399 | | | | | | | | |
| 400 | **Accumulated Reserve Transmission Plant** | | | | | | | |
| 453 | **All - Transmission** | | | | | | | |
| 454 | | | 350 | | Land and Land Rights | 4,874,078 | 4,985,378 | 5,096,679 |
| 455 | | | 350.1 | | Land - Right of Way | 25,366,156 | 25,408,341 | 25,450,526 |
| 456 | | | 351.01 | | Computer Hardware | 3,527,775 | 3,815,082 | 4,102,516 |
| 457 | | | 351.02 | | Computer Software | 3,611,485 | 3,743,113 | 3,864,880 |
| 458 | | | 351.03 | | Communication Equipment | 13,942,898 | 14,187,352 | 14,431,897 |
| 459 | | | 352 | | Structures and Improvements | 20,729,545 | 21,083,173 | 21,436,814 |
| 460 | | | 353 | | Station Equipment | 212,621,745 | 214,719,773 | 216,766,036 |
| 461 | | | 353.1 | | Station Equipment - Step-up Xfmr and Aux | 6,346,338 | 6,373,454 | 6,400,570 |
| 462 | | | 354 | | Towers and Fixtures | 47,634,396 | 47,398,953 | 47,466,562 |
| 463 | | | 355 | | Poles and Fixtures | 121,863,439 | 123,577,126 | 124,982,499 |
| 464 | | | 356 | | Overhead Conductors and Devices | 96,174,023 | 96,643,957 | 97,113,414 |
| 465 | | | 357 | | Underground Conduit | 2,350 | 2,644 | 2,937 |
| 466 | | | 359 | | Roads and Trails | 2,927,553 | 2,939,528 | 2,951,504 |
| 467 | **Total Accumulated Reserve Transmission Plant** | | | | | 559,621,781 | 564,877,874 | 570,066,834 |
| 468 | | | | | | | | |
| 469 | | | | | | | | |

| | A | B | C | D | E | F | G | H |
|---|---|---|---|---|---|---|---|---|
| 1 | **Public Service Company of New Mexico** | | | | | | | |
| 2 | **Schedule C-1 a** | | | | | | | |
| 3 | **Accumulated Provision for Depreciation and Amortization by Functional Classification** | | | | | | | |
| 4 | **Base Period Ending 6/30/2026** | | | | | | | |
| 5 | **Test Period Ending 9/30/2028** | | | | | | | |
| 6 | Link to WP Plant Lead Sheet | | | | | | | |
| 7 | Base Period data is historical Information from the Company's Books and Records. | | | | | | | |
| 8 | **This schedule is sponsored by PNM Witness Gutierrez** | | | | | | | |
| 9 | Please see the Direct Testimony of PNM Witness Gutierrez for discussion of adjustments/changes to the Base Period, Test Period, and Linkage Data. | | | | | | | |
| 10 | **Description** | **Location Number Note 6** | **FERC** | **Loc/FERC** | **FERC Description** | **Base Period Beginning Balance 7/1/25** | **Balance 8/1/25** | **Balance 9/1/25** |
| 470 | | | | | | | | |
| 471 | **Accumulated Reserve Distribution Plant** | | | | | | | |
| 665 | **All - Distribution** | | | | | | | |
| 666 | | | 360 | | Land and Land Rights | 261,298 | 261,298 | 261,298 |
| 667 | | | 360.1 | | Land - Right of Way | 1,227,853 | 1,229,444 | 1,231,035 |
| 668 | | | 361 | | Structures and Improvements | 11,554,850 | 11,617,324 | 11,679,807 |
| 669 | | | 362 | | Station Equipment | 103,681,205 | 104,296,105 | 104,937,573 |
| 670 | | | 363.01 | | Computer Hardware | 1,129,284 | 1,181,723 | 1,234,104 |
| 671 | | | 363.02 | | Computer Software | 9,229,206 | 9,712,634 | 10,194,255 |
| 672 | | | 363.03 | | Communication Equipment | 6,387,198 | 6,444,666 | 6,536,231 |
| 673 | | | 364 | | Poles, Towers and Fixtures | 91,449,549 | 92,267,754 | 92,915,692 |
| 674 | | | 365 | | Overhead Conductors and Devices | 107,287,371 | 108,082,953 | 108,744,692 |
| 675 | | | 366 | | Underground Conduit | 72,546,887 | 72,794,260 | 73,026,067 |
| 676 | | | 367 | | Underground Conductors and Devices | 140,769,806 | 141,387,799 | 142,089,720 |
| 677 | | | 368 | | Line Transformers | 122,732,021 | 123,288,661 | 123,093,808 |
| 678 | | | 369 | | Services | 51,112,586 | 51,363,861 | 51,619,095 |
| 679 | | | 369.1 | | Services - Underground | 80,969,818 | 81,370,949 | 81,784,923 |
| 680 | | | 370 | | Meters | 12,102,847 | 12,242,679 | 12,502,916 |
| 681 | | | 370.4 | | Meters - Grid Mod | - | - | - |
| 682 | | | 371 | | Installations on Customers' Premises | 8,621,527 | 8,621,527 | 8,621,527 |
| 683 | | | 371.1 | | Leased Flood Lighting | 266,445 | 266,445 | 266,445 |
| 684 | | | 373 | | Street Lighting and Signal Systems | 12,912,468 | 12,971,036 | 13,030,581 |
| 685 | | | 374 | | Asset Retirement Costs - Distribution | 14,051 | 14,076 | 14,101 |
| 686 | **Total Accumulated Reserve Distribution Plant** | | | | | 834,256,268 | 839,415,197 | 843,783,869 |
| 687 | | | | | | | | |
| 688 | | | | | | | | |

| | A | B | C | D | E | F | G | H |
|---|---|---|---|---|---|---|---|---|
| 1 | **Public Service Company of New Mexico** | | | | | | | |
| 2 | **Schedule C-1 a** | | | | | | | |
| 3 | **Accumulated Provision for Depreciation and Amortization by Functional Classification** | | | | | | | |
| 4 | **Base Period Ending 6/30/2026** | | | | | | | |
| 5 | **Test Period Ending 9/30/2028** | | | | | | | |
| 6 | Link to WP Plant Lead Sheet | | | | | | | |
| 7 | Base Period data is historical Information from the Company's Books and Records. | | | | | | | |
| 8 | **This schedule is sponsored by PNM Witness Gutierrez** | | | | | | | |
| 9 | Please see the Direct Testimony of PNM Witness Gutierrez for discussion of adjustments/changes to the Base Period, Test Period, and Linkage Data. | | | | | | | |
| 10 | **Description** | **Location Number Note 6** | **FERC** | **Loc/FERC** | **FERC Description** | **Base Period Beginning Balance 7/1/25** | **Balance 8/1/25** | **Balance 9/1/25** |
| 689 | **Gross Plant G&I Plant (303,389-399)** | | | | | | | |
| 719 | **Total General & Intangible Plant** | | | | | | | |
| 720 | | | 303 | | Miscellaneous Intangible Plant | - | - | - |
| 721 | | | 389 | | Land and Land Rights | - | - | - |
| 722 | | | 390 | | Structures and Improvements | 29,669,890 | 29,787,640 | 29,905,394 |
| 723 | | | 390.1 | | Bulk Power Office Building Remodeling | 5,713,965 | 5,714,909 | 5,715,853 |
| 724 | | | 390.2 | | Bulk Power Office Building | 5,868,673 | 5,868,673 | 5,868,673 |
| 725 | | | 391 | | Office Furniture and Equipment | 2,562,066 | 2,584,413 | 2,606,761 |
| 726 | | | 391.1 | | Office Furniture and Equipment - PC System | - | - | - |
| 727 | | | 391.2 | | Office Furniture and Equipment - PC's | - | - | - |
| 728 | | | 391.3 | | Computer Hardware | - | - | - |
| 729 | | | 391.5 | | Computer Hardware - Solar | - | - | - |
| 730 | | | 391.7 | | Computer Hardware | - | - | - |
| 731 | | | 392 | | Transportation Equipment - Light | 1,886,303 | 1,904,427 | 1,922,550 |
| 732 | | | 392.1 | | Transportation Equipment - Heavy | 3,340,503 | 3,360,374 | 3,380,244 |
| 733 | | | 392.2 | | Transportation Equipment - Trailers | 3,166,955 | 3,190,645 | 3,214,336 |
| 734 | | | 392.4 | | Transportation Equipment - Leaseback | - | - | - |
| 735 | | | 393 | | Stores Equipment | 77,755 | 78,092 | 78,429 |
| 736 | | | 394 | | Tools, Shop & Garage Equipment | 8,545,212 | 8,622,710 | 8,700,296 |
| 737 | | | 395 | | Laboratory Equipment | 99,247 | 101,017 | 102,787 |
| 738 | | | 396 | | Power Operated Equipment | 3,927,607 | 3,942,705 | 3,957,804 |
| 739 | | | 397.01 | | Computer Hardware | 1,344,613 | 1,394,994 | 1,445,379 |
| 740 | | | 397.02 | | Computer Software | 15,902,189 | 16,363,704 | 16,793,034 |
| 741 | | | 397.03 | | Communication Equipment | (0) | (0) | - |
| 742 | | | 398 | | Miscellaneous Equipment | 1,094,430 | 1,100,087 | 1,105,744 |
| 743 | | | 399.1 | | ARO General Plant-1 | 16,187 | 16,213 | 16,239 |
| 744 | **Total Accumulated Reserve G&I Plant - PNM** | | | | | 83,215,595 | 84,030,605 | 84,813,523 |
| 745 | | | | | | | | |
| 746 | **Total Electric Plant In Service** | | 101/106 | | | 2,373,407,717 | 2,389,616,854 | 2,405,110,459 |
| 747 | | | | | | | | |
| 748 | **Electric Plant Purchased** | | 102 | | | | | |
| 749 | | | | | | | | |
| 750 | **Electric Plant Acquisition Adjustment** | | | | Acq. Adj. - Palo Verde Unit 1&2 (Drexel) | | | |
| 751 | | | | | Acq. Adj. - Palo Verde Unit 2 (First Chicago) | - | - | - |
| 752 | | | | | Acq. Adj. - (EIP) | - | - | - |
| 753 | **Electric Plant Acquisition Adjustment** | | 114 | | | - | - | - |
| 754 | | | | | | | | |
| 755 | **Total Electric Plant** | | | | | 2,373,407,717 | 2,389,616,854 | 2,405,110,459 |
| 756 | | | | | | | | |

| | A | B | C | D | E | F | G | H |
|---|---|---|---|---|---|---|---|---|
| 1 | **Public Service Company of New Mexico** | | | | | | | |
| 2 | **Schedule C-1 a** | | | | | | | |
| 3 | **Accumulated Provision for Depreciation and Amortization by Functional Classification** | | | | | | | |
| 4 | **Base Period Ending 6/30/2026** | | | | | | | |
| 5 | **Test Period Ending 9/30/2028** | | | | | | | |
| 6 | Link to WP Plant Lead Sheet | | | | | | | |
| 7 | Base Period data is historical Information from the Company's Books and Records. | | | | | | | |
| 8 | **This schedule is sponsored by PNM Witness Gutierrez** | | | | | | | |
| 9 | Please see the Direct Testimony of PNM Witness Gutierrez for discussion of adjustments/changes to the Base Period, Test Period, and Linkage Data. | | | | | | | |
| 10 | **Description** | **Location Number Note 6** | **FERC** | **Loc/FERC** | **FERC Description** | **Base Period Beginning Balance 7/1/25** | **Balance 8/1/25** | **Balance 9/1/25** |
| 757 | | | | | | | | |
| 758 | **Corporate Unallocated** | 900 | 303 | 900303 | Miscellaneous Intangible Plant | - | - | - |
| 759 | | 900 | 389 | 900389 | Land and Land Rights | (66,097) | (66,097) | (66,097) |
| 760 | | 900 | 390 | 900390 | Structures and Improvements | 23,239,241 | 23,340,608 | 23,441,974 |
| 761 | | 900 | 390.1 | 900390.1 | Bulk Power Office Building Remodeling | - | - | - |
| 762 | | 900 | 390.2 | 900390.2 | Bulk Power Office Building | - | - | - |
| 763 | | 900 | 391 | 900391 | Office Furniture and Equipment | 271,630 | 275,458 | 279,296 |
| 764 | | 900 | 391.1 | 900391.1 | Office Furniture and Equipment - PC System | - | - | - |
| 765 | | 900 | 391.2 | 900391.2 | Office Furniture and Equipment - PC's | - | - | - |
| 766 | | 900 | 391.3 | 900391.3 | Computer Hardware | - | - | - |
| 767 | | 900 | 391.5 | 900391.5 | Computer Hardware - Solar | - | - | - |
| 768 | | 900 | 391.7 | 900391.7 | Computer Hardware | - | - | - |
| 769 | | 900 | 392 | 900392 | Transportation Equipment - Light | 124,904 | 126,268 | 127,633 |
| 770 | | 900 | 392.1 | 900392.1 | Transportation Equipment - Heavy | 11,638 | 11,850 | 12,061 |
| 771 | | 900 | 392.2 | 900392.2 | Transportation Equipment - Trailers | 6,575 | 6,604 | 6,632 |
| 772 | | 900 | 392.4 | 900392.4 | Transportation Equipment - Leaseback | - | - | - |
| 773 | | 900 | 393 | 900393 | Stores Equipment | - | - | - |
| 774 | | 900 | 394 | 900394 | Tools, Shop & Garage Equipment | 279,491 | 281,749 | 284,007 |
| 775 | | 900 | 395 | 900395 | Laboratory Equipment | - | - | - |
| 776 | | 900 | 396 | 900396 | Power Operated Equipment | 20,530 | 20,590 | 20,650 |
| 777 | | 900 | 397 | 900397 | Communication Equipment | - | - | - |
| 778 | | 900 | 397.01 | 900397.01 | Computer Hardware | 22,659,030 | 23,741,731 | 24,824,431 |
| 779 | | 900 | 397.02 | 900397.02 | Computer Software | 90,758,414 | 93,218,823 | 95,783,379 |
| 780 | | 900 | 397.03 | 900397.03 | Communication Equipment | 3,193,645 | 3,222,995 | 3,252,344 |
| 781 | | 900 | 397.2 | 900397.2 | Communication Equipment | - | - | - |
| 782 | | 900 | 397.3 | 900397.3 | Communication Equipment | - | - | - |
| 783 | | 900 | 398 | 900398 | Miscellaneous Equipment | - | - | - |
| 784 | | 900 | 399.1 | 900399.1 | ARO General Plant-1 | - | - | - |
| 785 | | | | | | | | |
| 786 | **Total Accumulated Reserve Corporate Plant** | | | | | 140,499,002 | 144,180,578 | 147,966,311 |
| 787 | | | | | | | | |
| 788 | **Total Electric Plant In Service - with Corporate** | | 101/106 | | | 2,513,906,720 | 2,533,797,432 | 2,553,076,770 |
| 790 | **Electric Plant Purchased - with Corporate** | | 102 | | | - | - | - |
| 792 | **Electric Plant Acq. Adj. - with Corporate** | | 114 | | | - | - | - |
| 793 | | | | | | | | |
| 794 | **Total Electric Plant - with Corporate** | | | | | 2,513,906,720 | 2,533,797,432 | 2,553,076,770 |

| | A | B | C | D | E | I | J | K |
|---|---|---|---|---|---|---|---|---|
| 1 | **Public Service Company of New Mexico** | | | | | | | |
| 2 | **Schedule C-1 a** | | | | | | | |
| 3 | **Accumulated Provision for Depreciation and Amortization by Functional Classification** | | | | | | | |
| 4 | **Base Period Ending 6/30/2026** | | | | | | | |
| 5 | **Test Period Ending 9/30/2028** | | | | | | | |
| 6 | Link to WP Plant Lead Sheet | | | | | | | |
| 7 | Base Period data is historical Information from the Company's Books and Records. | | | | | | | |
| 8 | **This schedule is sponsored by PNM Witness Gutierrez** | | | | | | | |
| 9 | Please see the Direct Testimony of PNM Witness Gutierrez for discussion of adjustments/changes to the Base Period, Test Period, and Linkage Data. | | | | | | | |
| 10 | **Description** | **Location Number Note 6** | **FERC** | **Loc/FERC** | **FERC Description** | **Balance 10/1/25** | **Balance 11/1/25** | **Balance 12/1/25** |
| 11 | | | | | | | | |
| 12 | **Accumulated Depreciation Production Plant** | | | | | | | |
| 13 | **Steam Production** | | | | | | | |
| 56 | **All - Steam** | | | | | | | |
| 57 | | | 310 | | Land and Land Rights | - | - | - |
| 58 | | | 310.1 | | Land Right of Way | 17,911 | 17,950 | 17,989 |
| 59 | | | 311 | | Structures & Improvements | 8,380,804 | 8,440,931 | 8,501,053 |
| 60 | | | 312 | | Boiler Plant Equipment | 89,868,536 | 90,425,272 | 90,601,795 |
| 61 | | | 314 | | Turbogenerator Units | 35,577,592 | 35,803,874 | 36,030,751 |
| 62 | | | 315 | | Accessory Electric Equipment | 9,898,975 | 9,956,615 | 10,014,312 |
| 63 | | | 315.01 | | Computer Hardware | - | - | - |
| 64 | | | 315.02 | | Computer Software | 401,318 | 424,057 | 450,065 |
| 65 | | | 315.03 | | Communication Equipment | 175,770 | 177,627 | 179,485 |
| 66 | | | 316 | | Misc Power Plant Equipment | 5,510,063 | 5,597,418 | 5,684,381 |
| 67 | | | 317 | | Asset Retirement Costs - Steam | 3,771,142 | 3,804,203 | 3,837,263 |
| 68 | **Total Steam Production Accumulated Reserve** | | | | | 153,602,111 | 154,647,947 | 155,317,094 |
| 69 | | | | | | | | |
| 70 | | | | | | | | |
| 71 | **Nuclear Production** | | | | | | | |
| 129 | **All - Nuclear** | | | | | | | |
| 130 | | | 320 | | Land and Land Rights | 0 | 0 | 0 |
| 131 | | | 320.1 | | Land - Right of Way | 29,432 | 29,488 | 29,544 |
| 132 | | | 321 | | Structures and Improvements | 109,646,646 | 110,017,124 | 109,850,862 |
| 133 | | | 322 | | Reactor Plant Equipment | 169,823,841 | 170,469,008 | 170,968,914 |
| 134 | | | 323 | | Turbogenerator Units | 60,561,900 | 60,755,026 | 61,012,001 |
| 135 | | | 324 | | Accessory Electric Equipment | 42,417,243 | 42,498,776 | 42,580,082 |
| 136 | | | 324.01 | | Computer Hardware | - | - | - |
| 137 | | | 324.02 | | Computer Software | 2,723,891 | 2,798,164 | 2,971,291 |
| 138 | | | 324.03 | | Communication Equipment | 215,830 | 218,195 | 220,560 |
| 139 | | | 325 | | Misc Power Plant Equipment | 36,990,070 | 37,141,475 | 37,268,791 |
| 140 | | | 326 | | Asset Retirement Costs Nuclear Prod Plant | 3,000,403 | 3,011,588 | 3,022,773 |
| 141 | **Total Nuclear Production Accumulated Reserve** | | | | | 425,409,257 | 426,938,845 | 427,924,816 |
| 142 | | | | | | | | |
| 143 | | | | | | | | |

| | A | B | C | D | E | I | J | K |
|---|---|---|---|---|---|---|---|---|
| 1 | **Public Service Company of New Mexico** | | | | | | | |
| 2 | **Schedule C-1 a** | | | | | | | |
| 3 | **Accumulated Provision for Depreciation and Amortization by Functional Classification** | | | | | | | |
| 4 | **Base Period Ending 6/30/2026** | | | | | | | |
| 5 | **Test Period Ending 9/30/2028** | | | | | | | |
| 6 | Link to WP Plant Lead Sheet | | | | | | | |
| 7 | Base Period data is historical Information from the Company's Books and Records. | | | | | | | |
| 8 | **This schedule is sponsored by PNM Witness Gutierrez** | | | | | | | |
| 9 | Please see the Direct Testimony of PNM Witness Gutierrez for discussion of adjustments/changes to the Base Period, Test Period, and Linkage Data. | | | | | | | |
| 10 | **Description** | **Location Number Note 6** | **FERC** | **Loc/FERC** | **FERC Description** | **Balance 10/1/25** | **Balance 11/1/25** | **Balance 12/1/25** |
| 144 | **Solar Production** | | | | | | | |
| 237 | **All - Solar** | | | | | | | |
| 238 | | | 338.01 | | Land & Land Rights | - | - | - |
| 239 | | | 338.02 | | Structures and Improvements | 105,788 | 106,549 | 107,310 |
| 240 | | | 338.04 | | Solar Panels | 101,033,685 | 101,805,771 | 102,577,856 |
| 241 | | | 338.05 | | Collector System | 1,866,469 | 1,890,369 | 1,914,268 |
| 242 | | | 338.07 | | Solar Inverters | - | - | - |
| 243 | | | 338.08 | | Other Accessory Electrical Equipment | 11,019,023 | 11,114,151 | 11,209,278 |
| 244 | | | 338.09 | | Computer Hardware | 4,313 | 5,176 | 6,039 |
| 245 | | | 338.10 | | Computer Software | - | - | - |
| 246 | | | 338.11 | | Communication Equipment | 140,578 | 144,205 | 147,832 |
| 247 | | | 338.12 | | Misc. Power Plant Equipment | 1,730,769 | 1,744,655 | 1,758,541 |
| 248 | **Total Solar Production Accumulated Reserve** | | | | | 115,900,625 | 116,810,875 | 117,721,124 |
| 249 | | | | | | | | |
| 250 | **Other Production** | | | | | | | |
| 251 | | | | | | | | |
| 252 | **Other Production - Gas:** | | | | | | | |
| 339 | **All - Gas** | | 340 | | Land and Land Rights | - | - | - |
| 340 | | | 340.1 | | Land - Right of Way | 696,728 | 702,613 | 708,498 |
| 341 | | | 341 | | Structures and Improvements | 41,223,589 | 41,409,416 | 41,275,964 |
| 342 | | | 342 | | Fuel Holders, Producers, Accessories | 54,764,514 | 55,052,323 | 55,356,675 |
| 343 | | | 343 | | Prime Movers | - | - | - |
| 344 | | | 344 | | Generators | 93,964,058 | 92,866,760 | 93,292,856 |
| 345 | | | 345 | | Accessory Electric Equipment | 7,545,971 | 7,644,522 | 7,623,583 |
| 346 | | | 345.01 | | Computer Hardware | 38,621 | 38,621 | 38,621 |
| 347 | | | 345.02 | | Computer Software | 44,838 | 47,000 | 37,574 |
| 348 | | | 345.03 | | Communication Equipment | 3,397 | 3,613 | 3,829 |
| 349 | | | 346 | | Misc Power Plant Equipment | 10,821,987 | 10,886,497 | 10,634,390 |
| 350 | | | 347 | | Asset Retirement Costs - Other Production | 978,477 | 987,276 | 996,075 |
| 351 | **Total Other Production Plant - Gas** | | | | | 210,082,180 | 209,638,641 | 209,968,065 |
| 352 | | | | | | | | |
| 353 | | | | | | | | |
| 354 | **Total Other Production Accumulated Reserve** | | | | | 210,082,180 | 209,638,641 | 209,968,065 |

| | A | B | C | D | E | I | J | K |
|---|---|---|---|---|---|---|---|---|
| 1 | **Public Service Company of New Mexico** | | | | | | | |
| 2 | **Schedule C-1 a** | | | | | | | |
| 3 | **Accumulated Provision for Depreciation and Amortization by Functional Classification** | | | | | | | |
| 4 | **Base Period Ending 6/30/2026** | | | | | | | |
| 5 | **Test Period Ending 9/30/2028** | | | | | | | |
| 6 | Link to WP Plant Lead Sheet | | | | | | | |
| 7 | Base Period data is historical Information from the Company's Books and Records. | | | | | | | |
| 8 | **This schedule is sponsored by PNM Witness Gutierrez** | | | | | | | |
| 9 | Please see the Direct Testimony of PNM Witness Gutierrez for discussion of adjustments/changes to the Base Period, Test Period, and Linkage Data. | | | | | | | |
| 10 | **Description** | **Location Number Note 6** | **FERC** | **Loc/FERC** | **FERC Description** | **Balance 10/1/25** | **Balance 11/1/25** | **Balance 12/1/25** |
| 355 | | | | | | | | |
| 356 | **Total Accumulated Reserve Production** | | | | | 904,994,173 | 908,036,308 | 910,931,100 |
| 357 | | | | | | | | |
| 358 | | | | | | | | |
| 359 | **Accumulated Energy Storage Plant** | | | | | | | |
| 386 | **All - Energy Storage** | | 387.01 | 387.01 | Land & Land Rights | - | - | - |
| 387 | | | 387.02 | 387.02 | Structures & Improvements | 10,339 | 12,063 | 13,786 |
| 388 | | | 387.03 | 387.03 | Energy Storage Equipment | 3,895,476 | 3,938,446 | 3,981,415 |
| 389 | | | 387.05 | 387.05 | Collector System | 74,739 | 87,196 | 99,652 |
| 390 | | | 387.06 | 387.06 | Generator Step-Up Transformers (GSU) | 26,518 | 30,937 | 35,357 |
| 391 | | | 387.07 | 387.07 | Inverters | - | - | - |
| 392 | | | 387.08 | 387.08 | Computer Hardware | - | - | - |
| 393 | | | 387.09 | 387.09 | Computer Software | 151,251 | 161,335 | 171,418 |
| 394 | | | 387.10 | 387.10 | Communication Equipment | 8,448 | 9,856 | 11,263 |
| 395 | | | 387.11 | 387.11 | Misc. Energy Storage Equipment | 1,661,663 | 1,673,356 | 1,685,048 |
| 396 | | | 387.12 | 387.12 | Asset Retirement Costs for Energy Storage | - | - | - |
| 397 | **Total Energy Storage Plant** | | | | | 5,828,435 | 5,913,187 | 5,997,939 |
| 398 | | | | | | | | |
| 399 | | | | | | | | |
| 400 | **Accumulated Reserve Transmission Plant** | | | | | | | |
| 453 | **All - Transmission** | | | | | | | |
| 454 | | | 350 | | Land and Land Rights | 5,207,979 | 5,319,280 | 5,430,580 |
| 455 | | | 350.1 | | Land - Right of Way | 25,492,717 | 25,534,939 | 25,577,160 |
| 456 | | | 351.01 | | Computer Hardware | 4,390,003 | 4,677,831 | 5,000,871 |
| 457 | | | 351.02 | | Computer Software | 3,986,909 | 4,108,872 | 4,230,834 |
| 458 | | | 351.03 | | Communication Equipment | 14,666,366 | 14,694,486 | 14,952,843 |
| 459 | | | 352 | | Structures and Improvements | 21,792,231 | 22,147,498 | 22,531,659 |
| 460 | | | 353 | | Station Equipment | 218,854,450 | 216,543,983 | 218,739,061 |
| 461 | | | 353.1 | | Station Equipment - Step-up Xfmr and Aux | 6,427,687 | 6,454,803 | 6,481,919 |
| 462 | | | 354 | | Towers and Fixtures | 47,534,172 | 47,601,781 | 47,669,628 |
| 463 | | | 355 | | Poles and Fixtures | 126,295,314 | 127,712,933 | 128,671,863 |
| 464 | | | 356 | | Overhead Conductors and Devices | 97,536,577 | 98,007,188 | 98,868,482 |
| 465 | | | 357 | | Underground Conduit | 3,231 | 3,525 | 3,818 |
| 466 | | | 359 | | Roads and Trails | 2,963,479 | 2,975,455 | 2,987,430 |
| 467 | **Total Accumulated Reserve Transmission Plant** | | | | | 575,151,115 | 575,782,572 | 581,146,150 |
| 468 | | | | | | | | |
| 469 | | | | | | | | |

| | A | B | C | D | E | I | J | K |
|---|---|---|---|---|---|---|---|---|
| 1 | **Public Service Company of New Mexico** | | | | | | | |
| 2 | **Schedule C-1 a** | | | | | | | |
| 3 | **Accumulated Provision for Depreciation and Amortization by Functional Classification** | | | | | | | |
| 4 | **Base Period Ending 6/30/2026** | | | | | | | |
| 5 | **Test Period Ending 9/30/2028** | | | | | | | |
| 6 | Link to WP Plant Lead Sheet | | | | | | | |
| 7 | Base Period data is historical Information from the Company's Books and Records. | | | | | | | |
| 8 | **This schedule is sponsored by PNM Witness Gutierrez** | | | | | | | |
| 9 | Please see the Direct Testimony of PNM Witness Gutierrez for discussion of adjustments/changes to the Base Period, Test Period, and Linkage Data. | | | | | | | |
| 10 | **Description** | **Location Number Note 6** | **FERC** | **Loc/FERC** | **FERC Description** | **Balance 10/1/25** | **Balance 11/1/25** | **Balance 12/1/25** |
| 470 | | | | | | | | |
| 471 | **Accumulated Reserve Distribution Plant** | | | | | | | |
| 665 | **All - Distribution** | | | | | | | |
| 666 | | | 360 | | Land and Land Rights | 261,298 | 261,298 | 261,298 |
| 667 | | | 360.1 | | Land - Right of Way | 1,232,626 | 1,234,217 | 1,235,808 |
| 668 | | | 361 | | Structures and Improvements | 11,591,479 | 11,652,187 | 11,717,300 |
| 669 | | | 362 | | Station Equipment | 105,559,429 | 105,811,192 | 106,282,008 |
| 670 | | | 363.01 | | Computer Hardware | 1,289,392 | 1,346,472 | 1,400,981 |
| 671 | | | 363.02 | | Computer Software | 10,698,848 | 11,243,140 | 11,801,360 |
| 672 | | | 363.03 | | Communication Equipment | 6,594,474 | 6,680,936 | 6,768,017 |
| 673 | | | 364 | | Poles, Towers and Fixtures | 93,216,601 | 93,916,187 | 94,369,975 |
| 674 | | | 365 | | Overhead Conductors and Devices | 109,366,715 | 110,109,321 | 110,652,532 |
| 675 | | | 366 | | Underground Conduit | 73,291,577 | 73,524,933 | 73,572,552 |
| 676 | | | 367 | | Underground Conductors and Devices | 142,733,227 | 143,415,660 | 143,675,078 |
| 677 | | | 368 | | Line Transformers | 123,610,016 | 124,174,059 | 124,730,328 |
| 678 | | | 369 | | Services | 51,874,328 | 52,129,561 | 52,389,165 |
| 679 | | | 369.1 | | Services - Underground | 82,198,896 | 82,612,870 | 83,037,365 |
| 680 | | | 370 | | Meters | 12,763,703 | 12,412,373 | 12,674,012 |
| 681 | | | 370.4 | | Meters - Grid Mod | - | - | - |
| 682 | | | 371 | | Installations on Customers' Premises | 8,621,527 | 8,621,527 | 8,621,527 |
| 683 | | | 371.1 | | Leased Flood Lighting | 266,445 | 266,445 | 266,445 |
| 684 | | | 373 | | Street Lighting and Signal Systems | 13,012,151 | 12,956,067 | 12,919,986 |
| 685 | | | 374 | | Asset Retirement Costs - Distribution | 14,127 | 14,152 | 14,177 |
| 686 | **Total Accumulated Reserve Distribution Plant** | | | | | 848,196,858 | 852,382,598 | 856,389,913 |
| 687 | | | | | | | | |
| 688 | | | | | | | | |

| | A | B | C | D | E | I | J | K |
|---|---|---|---|---|---|---|---|---|
| 1 | **Public Service Company of New Mexico** | | | | | | | |
| 2 | **Schedule C-1 a** | | | | | | | |
| 3 | **Accumulated Provision for Depreciation and Amortization by Functional Classification** | | | | | | | |
| 4 | **Base Period Ending 6/30/2026** | | | | | | | |
| 5 | **Test Period Ending 9/30/2028** | | | | | | | |
| 6 | Link to WP Plant Lead Sheet | | | | | | | |
| 7 | Base Period data is historical Information from the Company's Books and Records. | | | | | | | |
| 8 | **This schedule is sponsored by PNM Witness Gutierrez** | | | | | | | |
| 9 | Please see the Direct Testimony of PNM Witness Gutierrez for discussion of adjustments/changes to the Base Period, Test Period, and Linkage Data. | | | | | | | |
| 10 | **Description** | **Location Number Note 6** | **FERC** | **Loc/FERC** | **FERC Description** | **Balance 10/1/25** | **Balance 11/1/25** | **Balance 12/1/25** |
| 689 | **Gross Plant G&I Plant (303,389-399)** | | | | | | | |
| 719 | **Total General & Intangible Plant** | | | | | | | |
| 720 | | | 303 | | Miscellaneous Intangible Plant | - | - | - |
| 721 | | | 389 | | Land and Land Rights | - | - | - |
| 722 | | | 390 | | Structures and Improvements | 29,442,272 | 29,480,979 | 29,595,957 |
| 723 | | | 390.1 | | Bulk Power Office Building Remodeling | 5,716,798 | 5,717,742 | 5,718,686 |
| 724 | | | 390.2 | | Bulk Power Office Building | 5,868,673 | 5,868,673 | 5,868,673 |
| 725 | | | 391 | | Office Furniture and Equipment | 2,629,261 | 2,651,799 | 2,674,337 |
| 726 | | | 391.1 | | Office Furniture and Equipment - PC System | - | - | - |
| 727 | | | 391.2 | | Office Furniture and Equipment - PC's | - | - | - |
| 728 | | | 391.3 | | Computer Hardware | - | 5 | - |
| 729 | | | 391.5 | | Computer Hardware - Solar | - | - | - |
| 730 | | | 391.7 | | Computer Hardware | - | - | - |
| 731 | | | 392 | | Transportation Equipment - Light | 1,940,673 | 1,961,076 | 1,979,199 |
| 732 | | | 392.1 | | Transportation Equipment - Heavy | 3,400,115 | 3,419,986 | 3,439,856 |
| 733 | | | 392.2 | | Transportation Equipment - Trailers | 3,238,026 | 3,261,717 | 3,285,407 |
| 734 | | | 392.4 | | Transportation Equipment - Leaseback | - | - | - |
| 735 | | | 393 | | Stores Equipment | 78,766 | 79,103 | 79,440 |
| 736 | | | 394 | | Tools, Shop & Garage Equipment | 8,772,608 | 8,850,399 | 8,928,507 |
| 737 | | | 395 | | Laboratory Equipment | 104,558 | 106,328 | 108,098 |
| 738 | | | 396 | | Power Operated Equipment | 3,972,903 | 3,988,001 | 4,003,100 |
| 739 | | | 397.01 | | Computer Hardware | 1,495,767 | 1,541,817 | 1,557,295 |
| 740 | | | 397.02 | | Computer Software | 17,222,594 | 17,649,022 | 18,096,412 |
| 741 | | | 397.03 | | Communication Equipment | - | - | - |
| 742 | | | 398 | | Miscellaneous Equipment | 1,111,401 | 1,117,058 | 1,122,715 |
| 743 | | | 399.1 | | ARO General Plant-1 | 16,265 | 16,291 | 16,318 |
| 744 | **Total Accumulated Reserve G&I Plant - PNM** | | | | | 85,010,680 | 85,709,995 | 86,474,001 |
| 745 | | | | | | | | |
| 746 | **Total Electric Plant In Service** | | 101/106 | | | 2,419,181,261 | 2,427,824,660 | 2,440,939,102 |
| 747 | | | | | | | | |
| 748 | **Electric Plant Purchased** | | 102 | | | | | |
| 749 | | | | | | | | |
| 750 | **Electric Plant Acquisition Adjustment** | | | | Acq. Adj. - Palo Verde Unit 1&2 (Drexel) | | | |
| 751 | | | | | Acq. Adj. - Palo Verde Unit 2 (First Chicago) | - | - | - |
| 752 | | | | | Acq. Adj. - (EIP) | - | - | - |
| 753 | **Electric Plant Acquisition Adjustment** | | 114 | | | - | - | - |
| 754 | | | | | | | | |
| 755 | **Total Electric Plant** | | | | | 2,419,181,261 | 2,427,824,660 | 2,440,939,102 |
| 756 | | | | | | | | |

| | A | B | C | D | E | I | J | K |
|---|---|---|---|---|---|---|---|---|
| 1 | **Public Service Company of New Mexico** | | | | | | | |
| 2 | **Schedule C-1 a** | | | | | | | |
| 3 | **Accumulated Provision for Depreciation and Amortization by Functional Classification** | | | | | | | |
| 4 | **Base Period Ending 6/30/2026** | | | | | | | |
| 5 | **Test Period Ending 9/30/2028** | | | | | | | |
| 6 | Link to WP Plant Lead Sheet | | | | | | | |
| 7 | Base Period data is historical Information from the Company's Books and Records. | | | | | | | |
| 8 | **This schedule is sponsored by PNM Witness Gutierrez** | | | | | | | |
| 9 | Please see the Direct Testimony of PNM Witness Gutierrez for discussion of adjustments/changes to the Base Period, Test Period, and Linkage Data. | | | | | | | |
| 10 | **Description** | **Location Number Note 6** | **FERC** | **Loc/FERC** | **FERC Description** | **Balance 10/1/25** | **Balance 11/1/25** | **Balance 12/1/25** |
| 757 | | | | | | | | |
| 758 | **Corporate Unallocated** | 900 | 303 | 900303 | Miscellaneous Intangible Plant | - | - | - |
| 759 | | 900 | 389 | 900389 | Land and Land Rights | (66,097) | (66,097) | (66,097) |
| 760 | | 900 | 390 | 900390 | Structures and Improvements | 23,080,189 | 23,460,409 | 23,561,077 |
| 761 | | 900 | 390.1 | 900390.1 | Bulk Power Office Building Remodeling | - | - | - |
| 762 | | 900 | 390.2 | 900390.2 | Bulk Power Office Building | - | - | - |
| 763 | | 900 | 391 | 900391 | Office Furniture and Equipment | 283,134 | 287,056 | 290,977 |
| 764 | | 900 | 391.1 | 900391.1 | Office Furniture and Equipment - PC System | - | - | - |
| 765 | | 900 | 391.2 | 900391.2 | Office Furniture and Equipment - PC's | - | - | - |
| 766 | | 900 | 391.3 | 900391.3 | Computer Hardware | - | - | - |
| 767 | | 900 | 391.5 | 900391.5 | Computer Hardware - Solar | - | - | - |
| 768 | | 900 | 391.7 | 900391.7 | Computer Hardware | - | - | - |
| 769 | | 900 | 392 | 900392 | Transportation Equipment - Light | 128,997 | 130,362 | 131,726 |
| 770 | | 900 | 392.1 | 900392.1 | Transportation Equipment - Heavy | 12,273 | 12,485 | 12,696 |
| 771 | | 900 | 392.2 | 900392.2 | Transportation Equipment - Trailers | 6,661 | 6,689 | 6,718 |
| 772 | | 900 | 392.4 | 900392.4 | Transportation Equipment - Leaseback | - | - | - |
| 773 | | 900 | 393 | 900393 | Stores Equipment | - | - | - |
| 774 | | 900 | 394 | 900394 | Tools, Shop & Garage Equipment | 286,265 | 288,523 | 290,781 |
| 775 | | 900 | 395 | 900395 | Laboratory Equipment | - | - | - |
| 776 | | 900 | 396 | 900396 | Power Operated Equipment | 20,710 | 20,769 | 20,829 |
| 777 | | 900 | 397 | 900397 | Communication Equipment | - | - | - |
| 778 | | 900 | 397.01 | 900397.01 | Computer Hardware | 25,907,471 | 26,989,928 | 28,051,904 |
| 779 | | 900 | 397.02 | 900397.02 | Computer Software | 98,587,100 | 101,386,733 | 104,223,271 |
| 780 | | 900 | 397.03 | 900397.03 | Communication Equipment | 3,281,694 | 3,310,898 | 3,340,101 |
| 781 | | 900 | 397.2 | 900397.2 | Communication Equipment | - | - | - |
| 782 | | 900 | 397.3 | 900397.3 | Communication Equipment | - | - | - |
| 783 | | 900 | 398 | 900398 | Miscellaneous Equipment | - | - | - |
| 784 | | 900 | 399.1 | 900399.1 | ARO General Plant-1 | - | - | - |
| 785 | | | | | | | | |
| 786 | **Total Accumulated Reserve Corporate Plant** | | | | | 151,528,398 | 155,827,756 | 159,863,985 |
| 787 | | | | | | | | |
| 788 | **Total Electric Plant In Service - with Corporate** | | 101/106 | | | 2,570,709,659 | 2,583,652,416 | 2,600,803,087 |
| 790 | **Electric Plant Purchased - with Corporate** | | 102 | | | - | - | - |
| 792 | **Electric Plant Acq. Adj. - with Corporate** | | 114 | | | - | - | - |
| 793 | | | | | | | | |
| 794 | **Total Electric Plant - with Corporate** | | | | | 2,570,709,659 | 2,583,652,416 | 2,600,803,087 |

| | A | B | C | D | E | L | M | N |
|---|---|---|---|---|---|---|---|---|
| 1 | **Public Service Company of New Mexico** | | | | | | | |
| 2 | **Schedule C-1 a** | | | | | | | |
| 3 | **Accumulated Provision for Depreciation and Amortization by Functional Classification** | | | | | | | |
| 4 | **Base Period Ending 6/30/2026** | | | | | | | |
| 5 | **Test Period Ending 9/30/2028** | | | | | | | |
| 6 | Link to WP Plant Lead Sheet | | | | | | | |
| 7 | Base Period data is historical Information from the Company's Books and Records. | | | | | | | |
| 8 | **This schedule is sponsored by PNM Witness Gutierrez** | | | | | | | |
| 9 | Please see the Direct Testimony of PNM Witness Gutierrez for discussion of adjustments/changes to the Base Period, Test Period, and Linkage Data. | | | | | | | |
| 10 | **Description** | **Location Number Note 6** | **FERC** | **Loc/FERC** | **FERC Description** | **Balance 1/1/26** | **Balance 2/1/26** | **Balance 3/1/26** |
| 11 | | | | | | | | |
| 12 | **Accumulated Depreciation Production Plant** | | | | | | | |
| 13 | **Steam Production** | | | | | | | |
| 56 | **All - Steam** | | | | | | | |
| 57 | | | 310 | | Land and Land Rights | - | - | - |
| 58 | | | 310.1 | | Land Right of Way | 18,028 | 18,067 | 18,106 |
| 59 | | | 311 | | Structures & Improvements | 7,495,138 | 7,552,881 | 7,613,063 |
| 60 | | | 312 | | Boiler Plant Equipment | 90,841,231 | 91,396,825 | 91,990,811 |
| 61 | | | 314 | | Turbogenerator Units | 36,257,438 | 36,484,072 | 36,712,723 |
| 62 | | | 315 | | Accessory Electric Equipment | 10,072,007 | 10,129,715 | 10,187,434 |
| 63 | | | 315.01 | | Computer Hardware | - | - | - |
| 64 | | | 315.02 | | Computer Software | 472,784 | 495,503 | 518,221 |
| 65 | | | 315.03 | | Communication Equipment | 181,343 | 183,201 | 185,059 |
| 66 | | | 316 | | Misc Power Plant Equipment | 5,762,614 | 5,851,461 | 5,740,375 |
| 67 | | | 317 | | Asset Retirement Costs - Steam | 3,835,614 | 3,826,124 | 3,816,634 |
| 68 | **Total Steam Production Accumulated Reserve** | | | | | 154,936,198 | 155,937,849 | 156,782,426 |
| 69 | | | | | | | | |
| 70 | | | | | | | | |
| 71 | **Nuclear Production** | | | | | | | |
| 129 | **All - Nuclear** | | | | | | | |
| 130 | | | 320 | | Land and Land Rights | 0 | 0 | 0 |
| 131 | | | 320.1 | | Land - Right of Way | 29,599 | 29,655 | 29,711 |
| 132 | | | 321 | | Structures and Improvements | 109,599,253 | 109,972,447 | 110,308,328 |
| 133 | | | 322 | | Reactor Plant Equipment | 171,460,419 | 172,103,473 | 172,661,689 |
| 134 | | | 323 | | Turbogenerator Units | 59,427,871 | 59,653,775 | 59,879,679 |
| 135 | | | 324 | | Accessory Electric Equipment | 42,630,829 | 42,712,554 | 42,794,279 |
| 136 | | | 324.01 | | Computer Hardware | - | - | - |
| 137 | | | 324.02 | | Computer Software | 2,207,841 | 2,410,885 | 2,621,533 |
| 138 | | | 324.03 | | Communication Equipment | 222,926 | 225,291 | 227,657 |
| 139 | | | 325 | | Misc Power Plant Equipment | 37,309,195 | 37,460,476 | 37,572,390 |
| 140 | | | 326 | | Asset Retirement Costs Nuclear Prod Plant | 3,033,958 | 3,045,143 | 3,056,328 |
| 141 | **Total Nuclear Production Accumulated Reserve** | | | | | 425,921,892 | 427,613,699 | 429,151,594 |
| 142 | | | | | | | | |
| 143 | | | | | | | | |

| | A | B | C | D | E | L | M | N |
|---|---|---|---|---|---|---|---|---|
| 1 | **Public Service Company of New Mexico** | | | | | | | |
| 2 | **Schedule C-1 a** | | | | | | | |
| 3 | **Accumulated Provision for Depreciation and Amortization by Functional Classification** | | | | | | | |
| 4 | **Base Period Ending 6/30/2026** | | | | | | | |
| 5 | **Test Period Ending 9/30/2028** | | | | | | | |
| 6 | Link to WP Plant Lead Sheet | | | | | | | |
| 7 | Base Period data is historical Information from the Company's Books and Records. | | | | | | | |
| 8 | **This schedule is sponsored by PNM Witness Gutierrez** | | | | | | | |
| 9 | Please see the Direct Testimony of PNM Witness Gutierrez for discussion of adjustments/changes to the Base Period, Test Period, and Linkage Data. | | | | | | | |
| 10 | **Description** | **Location Number Note 6** | **FERC** | **Loc/FERC** | **FERC Description** | **Balance 1/1/26** | **Balance 2/1/26** | **Balance 3/1/26** |
| 144 | **Solar Production** | | | | | | | |
| 237 | **All - Solar** | | | | | | | |
| 238 | | | 338.01 | | Land & Land Rights | - | - | - |
| 239 | | | 338.02 | | Structures and Improvements | 108,071 | 108,832 | 109,594 |
| 240 | | | 338.04 | | Solar Panels | 103,349,942 | 104,122,028 | 104,894,114 |
| 241 | | | 338.05 | | Collector System | 1,938,167 | 1,962,066 | 1,985,965 |
| 242 | | | 338.07 | | Solar Inverters | - | - | - |
| 243 | | | 338.08 | | Other Accessory Electrical Equipment | 11,304,406 | 11,399,533 | 11,494,661 |
| 244 | | | 338.09 | | Computer Hardware | 6,901 | 7,764 | 8,627 |
| 245 | | | 338.10 | | Computer Software | - | - | - |
| 246 | | | 338.11 | | Communication Equipment | 151,459 | 155,087 | 158,714 |
| 247 | | | 338.12 | | Misc. Power Plant Equipment | 1,772,427 | 1,786,314 | 1,800,200 |
| 248 | **Total Solar Production Accumulated Reserve** | | | | | 118,631,375 | 119,541,624 | 120,451,873 |
| 249 | | | | | | | | |
| 250 | **Other Production** | | | | | | | |
| 251 | | | | | | | | |
| 252 | **Other Production - Gas:** | | | | | | | |
| 339 | **All - Gas** | | 340 | | Land and Land Rights | - | - | - |
| 340 | | | 340.1 | | Land - Right of Way | 714,384 | 720,269 | 726,155 |
| 341 | | | 341 | | Structures and Improvements | 41,457,788 | 41,702,438 | 41,947,087 |
| 342 | | | 342 | | Fuel Holders, Producers, Accessories | 55,567,522 | 55,898,100 | 56,227,833 |
| 343 | | | 343 | | Prime Movers | - | - | - |
| 344 | | | 344 | | Generators | 93,241,395 | 93,986,175 | 94,769,169 |
| 345 | | | 345 | | Accessory Electric Equipment | 7,709,376 | 7,808,283 | 7,907,190 |
| 346 | | | 345.01 | | Computer Hardware | 38,621 | 38,621 | 38,621 |
| 347 | | | 345.02 | | Computer Software | 38,590 | 39,605 | 40,621 |
| 348 | | | 345.03 | | Communication Equipment | 4,045 | 4,261 | 4,477 |
| 349 | | | 346 | | Misc Power Plant Equipment | 10,306,789 | 10,432,859 | 10,541,396 |
| 350 | | | 347 | | Asset Retirement Costs - Other Production | 1,021,548 | 1,047,020 | 1,072,493 |
| 351 | **Total Other Production Plant - Gas** | | | | | 210,100,057 | 211,677,632 | 213,275,042 |
| 352 | | | | | | | | |
| 353 | | | | | | | | |
| 354 | **Total Other Production Accumulated Reserve** | | | | | 210,100,057 | 211,677,632 | 213,275,042 |

| | A | B | C | D | E | L | M | N |
|---|---|---|---|---|---|---|---|---|
| 1 | **Public Service Company of New Mexico** | | | | | | | |
| 2 | **Schedule C-1 a** | | | | | | | |
| 3 | **Accumulated Provision for Depreciation and Amortization by Functional Classification** | | | | | | | |
| 4 | **Base Period Ending 6/30/2026** | | | | | | | |
| 5 | **Test Period Ending 9/30/2028** | | | | | | | |
| 6 | Link to WP Plant Lead Sheet | | | | | | | |
| 7 | Base Period data is historical Information from the Company's Books and Records. | | | | | | | |
| 8 | **This schedule is sponsored by PNM Witness Gutierrez** | | | | | | | |
| 9 | Please see the Direct Testimony of PNM Witness Gutierrez for discussion of adjustments/changes to the Base Period, Test Period, and Linkage Data. | | | | | | | |
| 10 | **Description** | **Location Number Note 6** | **FERC** | **Loc/FERC** | **FERC Description** | **Balance 1/1/26** | **Balance 2/1/26** | **Balance 3/1/26** |
| 355 | | | | | | | | |
| 356 | **Total Accumulated Reserve Production** | | | | | 909,589,521 | 914,770,804 | 919,660,935 |
| 357 | | | | | | | | |
| 358 | | | | | | | | |
| 359 | **Accumulated Energy Storage Plant** | | | | | | | |
| 386 | **All - Energy Storage** | | 387.01 | 387.01 | Land & Land Rights | - | - | - |
| 387 | | | 387.02 | 387.02 | Structures & Improvements | 15,509 | 17,233 | 18,956 |
| 388 | | | 387.03 | 387.03 | Energy Storage Equipment | 4,024,384 | 4,067,353 | 4,110,624 |
| 389 | | | 387.05 | 387.05 | Collector System | 112,109 | 124,565 | 137,099 |
| 390 | | | 387.06 | 387.06 | Generator Step-Up Transformers (GSU) | 39,777 | 44,196 | 48,645 |
| 391 | | | 387.07 | 387.07 | Inverters | - | - | - |
| 392 | | | 387.08 | 387.08 | Computer Hardware | - | - | - |
| 393 | | | 387.09 | 387.09 | Computer Software | 181,502 | 191,585 | 201,668 |
| 394 | | | 387.10 | 387.10 | Communication Equipment | 12,671 | 14,079 | 15,487 |
| 395 | | | 387.11 | 387.11 | Misc. Energy Storage Equipment | 1,696,740 | 1,710,246 | 1,723,779 |
| 396 | | | 387.12 | 387.12 | Asset Retirement Costs for Energy Storage | - | - | - |
| 397 | **Total Energy Storage Plant** | | | | | 6,082,691 | 6,169,257 | 6,256,258 |
| 398 | | | | | | | | |
| 399 | | | | | | | | |
| 400 | **Accumulated Reserve Transmission Plant** | | | | | | | |
| 453 | **All - Transmission** | | | | | | | |
| 454 | | | 350 | | Land and Land Rights | 5,541,880 | 5,653,180 | 5,764,481 |
| 455 | | | 350.1 | | Land - Right of Way | 25,619,355 | 25,661,550 | 25,703,745 |
| 456 | | | 351.01 | | Computer Hardware | 4,300,513 | 4,647,255 | 4,994,585 |
| 457 | | | 351.02 | | Computer Software | 3,770,190 | 3,918,886 | 4,067,885 |
| 458 | | | 351.03 | | Communication Equipment | 15,216,095 | 15,479,345 | 15,747,914 |
| 459 | | | 352 | | Structures and Improvements | 22,900,237 | 23,294,976 | 23,694,222 |
| 460 | | | 353 | | Station Equipment | 219,192,781 | 222,244,838 | 224,366,043 |
| 461 | | | 353.1 | | Station Equipment - Step-up Xfmr and Aux | 6,509,035 | 6,536,151 | 6,563,267 |
| 462 | | | 354 | | Towers and Fixtures | 47,672,384 | 47,739,934 | 47,807,367 |
| 463 | | | 355 | | Poles and Fixtures | 129,865,123 | 131,203,591 | 132,582,100 |
| 464 | | | 356 | | Overhead Conductors and Devices | 99,122,101 | 99,580,952 | 100,052,953 |
| 465 | | | 357 | | Underground Conduit | 4,112 | 4,406 | 4,700 |
| 466 | | | 359 | | Roads and Trails | 2,999,406 | 3,011,381 | 3,023,357 |
| 467 | **Total Accumulated Reserve Transmission Plant** | | | | | 582,713,212 | 588,976,445 | 594,372,618 |
| 468 | | | | | | | | |
| 469 | | | | | | | | |

| | A | B | C | D | E | L | M | N |
|---|---|---|---|---|---|---|---|---|
| 1 | **Public Service Company of New Mexico** | | | | | | | |
| 2 | **Schedule C-1 a** | | | | | | | |
| 3 | **Accumulated Provision for Depreciation and Amortization by Functional Classification** | | | | | | | |
| 4 | **Base Period Ending 6/30/2026** | | | | | | | |
| 5 | **Test Period Ending 9/30/2028** | | | | | | | |
| 6 | Link to WP Plant Lead Sheet | | | | | | | |
| 7 | Base Period data is historical Information from the Company's Books and Records. | | | | | | | |
| 8 | **This schedule is sponsored by PNM Witness Gutierrez** | | | | | | | |
| 9 | Please see the Direct Testimony of PNM Witness Gutierrez for discussion of adjustments/changes to the Base Period, Test Period, and Linkage Data. | | | | | | | |
| 10 | **Description** | **Location Number Note 6** | **FERC** | **Loc/FERC** | **FERC Description** | **Balance 1/1/26** | **Balance 2/1/26** | **Balance 3/1/26** |
| 470 | | | | | | | | |
| 471 | **Accumulated Reserve Distribution Plant** | | | | | | | |
| 665 | **All - Distribution** | | | | | | | |
| 666 | | | 360 | | Land and Land Rights | 255,704 | 255,704 | 255,704 |
| 667 | | | 360.1 | | Land - Right of Way | 1,237,399 | 1,238,990 | 1,240,581 |
| 668 | | | 361 | | Structures and Improvements | 11,781,978 | 11,888,466 | 11,995,366 |
| 669 | | | 362 | | Station Equipment | 105,756,581 | 106,210,569 | 106,880,359 |
| 670 | | | 363.01 | | Computer Hardware | 1,458,435 | 1,563,763 | 1,669,495 |
| 671 | | | 363.02 | | Computer Software | 12,422,227 | 13,303,590 | 14,176,415 |
| 672 | | | 363.03 | | Communication Equipment | 6,851,600 | 6,956,175 | 7,061,605 |
| 673 | | | 364 | | Poles, Towers and Fixtures | 93,754,221 | 93,904,901 | 95,114,101 |
| 674 | | | 365 | | Overhead Conductors and Devices | 110,399,449 | 111,031,437 | 111,886,378 |
| 675 | | | 366 | | Underground Conduit | 73,814,048 | 74,117,125 | 74,305,629 |
| 676 | | | 367 | | Underground Conductors and Devices | 143,631,336 | 144,425,385 | 145,131,990 |
| 677 | | | 368 | | Line Transformers | 123,579,573 | 124,131,091 | 124,703,600 |
| 678 | | | 369 | | Services | 51,693,174 | 51,922,344 | 52,183,116 |
| 679 | | | 369.1 | | Services - Underground | 82,921,154 | 83,336,367 | 83,771,771 |
| 680 | | | 370 | | Meters | 12,377,566 | 12,639,333 | 12,902,274 |
| 681 | | | 370.4 | | Meters - Grid Mod | - | - | - |
| 682 | | | 371 | | Installations on Customers' Premises | 8,621,527 | 8,621,527 | 8,621,527 |
| 683 | | | 371.1 | | Leased Flood Lighting | 266,445 | 266,445 | 266,445 |
| 684 | | | 373 | | Street Lighting and Signal Systems | 12,874,978 | 12,920,164 | 12,895,961 |
| 685 | | | 374 | | Asset Retirement Costs - Distribution | - | - | - |
| 686 | **Total Accumulated Reserve Distribution Plant** | | | | | 853,697,395 | 858,733,375 | 865,062,316 |
| 687 | | | | | | | | |
| 688 | | | | | | | | |

| | A | B | C | D | E | L | M | N |
|---|---|---|---|---|---|---|---|---|
| 1 | **Public Service Company of New Mexico** | | | | | | | |
| 2 | **Schedule C-1 a** | | | | | | | |
| 3 | **Accumulated Provision for Depreciation and Amortization by Functional Classification** | | | | | | | |
| 4 | **Base Period Ending 6/30/2026** | | | | | | | |
| 5 | **Test Period Ending 9/30/2028** | | | | | | | |
| 6 | Link to WP Plant Lead Sheet | | | | | | | |
| 7 | Base Period data is historical Information from the Company's Books and Records. | | | | | | | |
| 8 | **This schedule is sponsored by PNM Witness Gutierrez** | | | | | | | |
| 9 | Please see the Direct Testimony of PNM Witness Gutierrez for discussion of adjustments/changes to the Base Period, Test Period, and Linkage Data. | | | | | | | |
| 10 | **Description** | **Location Number Note 6** | **FERC** | **Loc/FERC** | **FERC Description** | **Balance 1/1/26** | **Balance 2/1/26** | **Balance 3/1/26** |
| 689 | **Gross Plant G&I Plant (303,389-399)** | | | | | | | |
| 719 | **Total General & Intangible Plant** | | | | | | | |
| 720 | | | 303 | | Miscellaneous Intangible Plant | - | - | - |
| 721 | | | 389 | | Land and Land Rights | - | - | - |
| 722 | | | 390 | | Structures and Improvements | 29,706,688 | 29,822,864 | 29,939,205 |
| 723 | | | 390.1 | | Bulk Power Office Building Remodeling | 5,719,630 | 5,720,574 | 5,721,518 |
| 724 | | | 390.2 | | Bulk Power Office Building | 5,868,673 | 5,868,673 | 5,868,673 |
| 725 | | | 391 | | Office Furniture and Equipment | 2,696,447 | 2,719,454 | 2,742,549 |
| 726 | | | 391.1 | | Office Furniture and Equipment - PC System | - | - | - |
| 727 | | | 391.2 | | Office Furniture and Equipment - PC's | - | - | - |
| 728 | | | 391.3 | | Computer Hardware | - | - | - |
| 729 | | | 391.5 | | Computer Hardware - Solar | - | - | - |
| 730 | | | 391.7 | | Computer Hardware | - | - | - |
| 731 | | | 392 | | Transportation Equipment - Light | 1,953,421 | 1,971,338 | 1,989,254 |
| 732 | | | 392.1 | | Transportation Equipment - Heavy | 3,459,727 | 3,473,473 | 3,481,774 |
| 733 | | | 392.2 | | Transportation Equipment - Trailers | 3,305,778 | 3,329,451 | 3,353,124 |
| 734 | | | 392.4 | | Transportation Equipment - Leaseback | - | - | - |
| 735 | | | 393 | | Stores Equipment | 79,777 | 80,114 | 80,451 |
| 736 | | | 394 | | Tools, Shop & Garage Equipment | 9,007,011 | 9,086,288 | 9,165,758 |
| 737 | | | 395 | | Laboratory Equipment | 109,869 | 111,639 | 113,409 |
| 738 | | | 396 | | Power Operated Equipment | 4,018,199 | 4,033,298 | 4,048,504 |
| 739 | | | 397.01 | | Computer Hardware | 1,555,150 | 1,569,244 | 1,594,180 |
| 740 | | | 397.02 | | Computer Software | 17,690,826 | 18,171,560 | 18,720,885 |
| 741 | | | 397.03 | | Communication Equipment | - | - | - |
| 742 | | | 398 | | Miscellaneous Equipment | 1,128,372 | 1,134,029 | 1,139,686 |
| 743 | | | 399.1 | | ARO General Plant-1 | 16,344 | 16,370 | 16,396 |
| 744 | **Total Accumulated Reserve G&I Plant - PNM** | | | | | 86,315,912 | 87,108,369 | 87,975,367 |
| 745 | | | | | | | | |
| 746 | **Total Electric Plant In Service** | | 101/106 | | | 2,438,398,731 | 2,455,758,249 | 2,473,327,494 |
| 747 | | | | | | | | |
| 748 | **Electric Plant Purchased** | | 102 | | | | | |
| 749 | | | | | | | | |
| 750 | **Electric Plant Acquisition Adjustment** | | | | Acq. Adj. - Palo Verde Unit 1&2 (Drexel) | | | |
| 751 | | | | | Acq. Adj. - Palo Verde Unit 2 (First Chicago) | - | - | - |
| 752 | | | | | Acq. Adj. - (EIP) | - | - | - |
| 753 | **Electric Plant Acquisition Adjustment** | | 114 | | | - | - | - |
| 754 | | | | | | | | |
| 755 | **Total Electric Plant** | | | | | 2,438,398,731 | 2,455,758,249 | 2,473,327,494 |
| 756 | | | | | | | | |

| | A | B | C | D | E | L | M | N |
|---|---|---|---|---|---|---|---|---|
| 1 | **Public Service Company of New Mexico** | | | | | | | |
| 2 | **Schedule C-1 a** | | | | | | | |
| 3 | **Accumulated Provision for Depreciation and Amortization by Functional Classification** | | | | | | | |
| 4 | **Base Period Ending 6/30/2026** | | | | | | | |
| 5 | **Test Period Ending 9/30/2028** | | | | | | | |
| 6 | Link to WP Plant Lead Sheet | | | | | | | |
| 7 | Base Period data is historical Information from the Company's Books and Records. | | | | | | | |
| 8 | **This schedule is sponsored by PNM Witness Gutierrez** | | | | | | | |
| 9 | Please see the Direct Testimony of PNM Witness Gutierrez for discussion of adjustments/changes to the Base Period, Test Period, and Linkage Data. | | | | | | | |
| 10 | **Description** | **Location Number Note 6** | **FERC** | **Loc/FERC** | **FERC Description** | **Balance 1/1/26** | **Balance 2/1/26** | **Balance 3/1/26** |
| 757 | | | | | | | | |
| 758 | **Corporate Unallocated** | 900 | 303 | 900303 | Miscellaneous Intangible Plant | - | - | - |
| 759 | | 900 | 389 | 900389 | Land and Land Rights | (66,097) | (66,097) | (66,096) |
| 760 | | 900 | 390 | 900390 | Structures and Improvements | 23,107,187 | 23,213,425 | 23,081,585 |
| 761 | | 900 | 390.1 | 900390.1 | Bulk Power Office Building Remodeling | - | - | - |
| 762 | | 900 | 390.2 | 900390.2 | Bulk Power Office Building | - | - | - |
| 763 | | 900 | 391 | 900391 | Office Furniture and Equipment | 294,898 | 298,819 | 302,741 |
| 764 | | 900 | 391.1 | 900391.1 | Office Furniture and Equipment - PC System | - | - | - |
| 765 | | 900 | 391.2 | 900391.2 | Office Furniture and Equipment - PC's | - | - | - |
| 766 | | 900 | 391.3 | 900391.3 | Computer Hardware | - | - | - |
| 767 | | 900 | 391.5 | 900391.5 | Computer Hardware - Solar | - | - | - |
| 768 | | 900 | 391.7 | 900391.7 | Computer Hardware | - | - | - |
| 769 | | 900 | 392 | 900392 | Transportation Equipment - Light | 133,091 | 134,606 | 136,114 |
| 770 | | 900 | 392.1 | 900392.1 | Transportation Equipment - Heavy | 12,908 | 13,119 | 13,331 |
| 771 | | 900 | 392.2 | 900392.2 | Transportation Equipment - Trailers | 6,747 | 6,775 | 6,804 |
| 772 | | 900 | 392.4 | 900392.4 | Transportation Equipment - Leaseback | - | - | - |
| 773 | | 900 | 393 | 900393 | Stores Equipment | - | - | - |
| 774 | | 900 | 394 | 900394 | Tools, Shop & Garage Equipment | 293,039 | 295,307 | 297,575 |
| 775 | | 900 | 395 | 900395 | Laboratory Equipment | - | - | - |
| 776 | | 900 | 396 | 900396 | Power Operated Equipment | 20,889 | 20,949 | 21,009 |
| 777 | | 900 | 397 | 900397 | Communication Equipment | - | - | - |
| 778 | | 900 | 397.01 | 900397.01 | Computer Hardware | 22,197,806 | 23,224,075 | 24,268,425 |
| 779 | | 900 | 397.02 | 900397.02 | Computer Software | 104,067,355 | 107,149,237 | 110,315,784 |
| 780 | | 900 | 397.03 | 900397.03 | Communication Equipment | 3,369,463 | 3,398,824 | 3,428,185 |
| 781 | | 900 | 397.2 | 900397.2 | Communication Equipment | - | - | - |
| 782 | | 900 | 397.3 | 900397.3 | Communication Equipment | - | - | - |
| 783 | | 900 | 398 | 900398 | Miscellaneous Equipment | - | - | - |
| 784 | | 900 | 399.1 | 900399.1 | ARO General Plant-1 | - | - | - |
| 785 | | | | | | | | |
| 786 | **Total Accumulated Reserve Corporate Plant** | | | | | 153,437,286 | 157,689,041 | 161,805,456 |
| 787 | | | | | | | | |
| 788 | **Total Electric Plant In Service - with Corporate** | | 101/106 | | | 2,591,836,018 | 2,613,447,290 | 2,635,132,950 |
| 790 | **Electric Plant Purchased - with Corporate** | | 102 | | | - | - | - |
| 792 | **Electric Plant Acq. Adj. - with Corporate** | | 114 | | | - | - | - |
| 793 | | | | | | | | |
| 794 | **Total Electric Plant - with Corporate** | | | | | 2,591,836,018 | 2,613,447,290 | 2,635,132,950 |

| | A | B | C | D | E | O | P | Q |
|---|---|---|---|---|---|---|---|---|
| 1 | **Public Service Company of New Mexico** | | | | | | | |
| 2 | **Schedule C-1 a** | | | | | | | |
| 3 | **Accumulated Provision for Depreciation and Amortization by Functional Classification** | | | | | | | |
| 4 | **Base Period Ending 6/30/2026** | | | | | | | |
| 5 | **Test Period Ending 9/30/2028** | | | | | | | |
| 6 | Link to WP Plant Lead Sheet | | | | | | | |
| 7 | Base Period data is historical Information from the Company's Books and Records. | | | | | | | |
| 8 | **This schedule is sponsored by PNM Witness Gutierrez** | | | | | | | |
| 9 | Please see the Direct Testimony of PNM Witness Gutierrez for discussion of adjustments/changes to the Base Period, Test Period, and Linkage Data. | | | | | | | |
| 10 | **Description** | **Location Number Note 6** | **FERC** | **Loc/FERC** | **FERC Description** | **Balance 4/1/26** | **Balance 5/1/26** | **Balance 6/1/26** |
| 11 | | | | | | | | |
| 12 | **Accumulated Depreciation Production Plant** | | | | | | | |
| 13 | **Steam Production** | | | | | | | |
| 56 | **All - Steam** | | | | | | | |
| 57 | | | 310 | | Land and Land Rights | - | - | - |
| 58 | | | 310.1 | | Land Right of Way | 18,145 | 18,184 | 18,223 |
| 59 | | | 311 | | Structures & Improvements | 7,638,353 | 7,698,512 | 7,740,309 |
| 60 | | | 312 | | Boiler Plant Equipment | 92,528,654 | 93,038,013 | 93,092,615 |
| 61 | | | 314 | | Turbogenerator Units | 36,941,339 | 36,812,357 | 37,040,078 |
| 62 | | | 315 | | Accessory Electric Equipment | 10,245,145 | 10,302,856 | 10,125,069 |
| 63 | | | 315.01 | | Computer Hardware | - | - | - |
| 64 | | | 315.02 | | Computer Software | 540,940 | 563,659 | 586,378 |
| 65 | | | 315.03 | | Communication Equipment | 186,980 | 188,901 | 190,822 |
| 66 | | | 316 | | Misc Power Plant Equipment | 5,813,064 | 5,901,619 | 5,682,713 |
| 67 | | | 317 | | Asset Retirement Costs - Steam | 3,807,144 | 3,797,654 | 3,788,164 |
| 68 | **Total Steam Production Accumulated Reserve** | | | | | 157,719,763 | 158,321,755 | 158,264,370 |
| 69 | | | | | | | | |
| 70 | | | | | | | | |
| 71 | **Nuclear Production** | | | | | | | |
| 129 | **All - Nuclear** | | | | | | | |
| 130 | | | 320 | | Land and Land Rights | 0 | 0 | 0 |
| 131 | | | 320.1 | | Land - Right of Way | 29,766 | 29,822 | 29,878 |
| 132 | | | 321 | | Structures and Improvements | 110,684,664 | 111,059,108 | 111,026,528 |
| 133 | | | 322 | | Reactor Plant Equipment | 173,304,410 | 173,932,613 | 173,673,412 |
| 134 | | | 323 | | Turbogenerator Units | 60,112,123 | 60,306,416 | 60,509,503 |
| 135 | | | 324 | | Accessory Electric Equipment | 42,879,818 | 42,965,362 | 43,057,481 |
| 136 | | | 324.01 | | Computer Hardware | - | - | - |
| 137 | | | 324.02 | | Computer Software | 2,832,214 | 3,055,805 | 3,270,463 |
| 138 | | | 324.03 | | Communication Equipment | 230,022 | 232,387 | 234,974 |
| 139 | | | 325 | | Misc Power Plant Equipment | 37,726,355 | 37,880,502 | 38,031,313 |
| 140 | | | 326 | | Asset Retirement Costs Nuclear Prod Plant | 3,067,513 | 3,078,698 | 3,089,882 |
| 141 | **Total Nuclear Production Accumulated Reserve** | | | | | 430,866,884 | 432,540,713 | 432,923,434 |
| 142 | | | | | | | | |
| 143 | | | | | | | | |

| | A | B | C | D | E | O | P | Q |
|---|---|---|---|---|---|---|---|---|
| 1 | **Public Service Company of New Mexico** | | | | | | | |
| 2 | **Schedule C-1 a** | | | | | | | |
| 3 | **Accumulated Provision for Depreciation and Amortization by Functional Classification** | | | | | | | |
| 4 | **Base Period Ending 6/30/2026** | | | | | | | |
| 5 | **Test Period Ending 9/30/2028** | | | | | | | |
| 6 | Link to WP Plant Lead Sheet | | | | | | | |
| 7 | Base Period data is historical Information from the Company's Books and Records. | | | | | | | |
| 8 | **This schedule is sponsored by PNM Witness Gutierrez** | | | | | | | |
| 9 | Please see the Direct Testimony of PNM Witness Gutierrez for discussion of adjustments/changes to the Base Period, Test Period, and Linkage Data. | | | | | | | |
| 10 | **Description** | **Location Number Note 6** | **FERC** | **Loc/FERC** | **FERC Description** | **Balance 4/1/26** | **Balance 5/1/26** | **Balance 6/1/26** |
| 144 | **Solar Production** | | | | | | | |
| 237 | **All - Solar** | | | | | | | |
| 238 | | | 338.01 | | Land & Land Rights | - | - | - |
| 239 | | | 338.02 | | Structures and Improvements | 110,355 | 111,116 | 111,877 |
| 240 | | | 338.04 | | Solar Panels | 105,666,200 | 106,438,286 | 107,210,371 |
| 241 | | | 338.05 | | Collector System | 2,009,864 | 2,033,763 | 2,057,663 |
| 242 | | | 338.07 | | Solar Inverters | - | - | - |
| 243 | | | 338.08 | | Other Accessory Electrical Equipment | 11,589,788 | 11,684,916 | 11,780,044 |
| 244 | | | 338.09 | | Computer Hardware | 9,489 | 10,352 | 11,215 |
| 245 | | | 338.10 | | Computer Software | - | - | - |
| 246 | | | 338.11 | | Communication Equipment | 162,341 | 165,968 | 169,595 |
| 247 | | | 338.12 | | Misc. Power Plant Equipment | 1,814,086 | 1,827,972 | 1,841,859 |
| 248 | **Total Solar Production Accumulated Reserve** | | | | | 121,362,124 | 122,272,373 | 123,182,623 |
| 249 | | | | | | | | |
| 250 | **Other Production** | | | | | | | |
| 251 | | | | | | | | |
| 252 | **Other Production - Gas:** | | | | | | | |
| 339 | **All - Gas** | | 340 | | Land and Land Rights | - | - | - |
| 340 | | | 340.1 | | Land - Right of Way | 732,040 | 737,926 | 743,811 |
| 341 | | | 341 | | Structures and Improvements | 42,172,981 | 42,417,591 | 42,651,298 |
| 342 | | | 342 | | Fuel Holders, Producers, Accessories | 56,288,106 | 56,617,946 | 56,947,631 |
| 343 | | | 343 | | Prime Movers | - | - | - |
| 344 | | | 344 | | Generators | 95,442,634 | 94,412,247 | 95,061,790 |
| 345 | | | 345 | | Accessory Electric Equipment | 8,006,097 | 8,105,004 | 8,203,912 |
| 346 | | | 345.01 | | Computer Hardware | 38,621 | 38,621 | 38,621 |
| 347 | | | 345.02 | | Computer Software | 41,636 | 42,652 | 43,667 |
| 348 | | | 345.03 | | Communication Equipment | 4,692 | 4,908 | 5,124 |
| 349 | | | 346 | | Misc Power Plant Equipment | 10,639,915 | 10,468,409 | 10,555,398 |
| 350 | | | 347 | | Asset Retirement Costs - Other Production | 1,097,966 | 1,123,439 | 1,148,912 |
| 351 | **Total Other Production Plant - Gas** | | | | | 214,464,689 | 213,968,743 | 215,400,163 |
| 352 | | | | | | | | |
| 353 | | | | | | | | |
| 354 | **Total Other Production Accumulated Reserve** | | | | | 214,464,689 | 213,968,743 | 215,400,163 |

| | A | B | C | D | E | O | P | Q |
|---|---|---|---|---|---|---|---|---|
| 1 | **Public Service Company of New Mexico** | | | | | | | |
| 2 | **Schedule C-1 a** | | | | | | | |
| 3 | **Accumulated Provision for Depreciation and Amortization by Functional Classification** | | | | | | | |
| 4 | **Base Period Ending 6/30/2026** | | | | | | | |
| 5 | **Test Period Ending 9/30/2028** | | | | | | | |
| 6 | Link to WP Plant Lead Sheet | | | | | | | |
| 7 | Base Period data is historical Information from the Company's Books and Records. | | | | | | | |
| 8 | **This schedule is sponsored by PNM Witness Gutierrez** | | | | | | | |
| 9 | Please see the Direct Testimony of PNM Witness Gutierrez for discussion of adjustments/changes to the Base Period, Test Period, and Linkage Data. | | | | | | | |
| 10 | **Description** | **Location Number Note 6** | **FERC** | **Loc/FERC** | **FERC Description** | **Balance 4/1/26** | **Balance 5/1/26** | **Balance 6/1/26** |
| 355 | | | | | | | | |
| 356 | **Total Accumulated Reserve Production** | | | | | 924,413,460 | 927,103,585 | 929,770,591 |
| 357 | | | | | | | | |
| 358 | | | | | | | | |
| 359 | **Accumulated Energy Storage Plant** | | | | | | | |
| 386 | **All - Energy Storage** | | 387.01 | 387.01 | Land & Land Rights | - | - | - |
| 387 | | | 387.02 | 387.02 | Structures & Improvements | 20,679 | 22,402 | 24,126 |
| 388 | | | 387.03 | 387.03 | Energy Storage Equipment | 4,153,895 | 4,197,166 | 4,240,437 |
| 389 | | | 387.05 | 387.05 | Collector System | 149,632 | 162,166 | 174,699 |
| 390 | | | 387.06 | 387.06 | Generator Step-Up Transformers (GSU) | 53,094 | 57,544 | 61,993 |
| 391 | | | 387.07 | 387.07 | Inverters | - | - | - |
| 392 | | | 387.08 | 387.08 | Computer Hardware | - | - | - |
| 393 | | | 387.09 | 387.09 | Computer Software | 211,752 | 221,835 | 231,919 |
| 394 | | | 387.10 | 387.10 | Communication Equipment | 16,895 | 18,303 | 19,711 |
| 395 | | | 387.11 | 387.11 | Misc. Energy Storage Equipment | 1,737,311 | 1,750,844 | 1,764,377 |
| 396 | | | 387.12 | 387.12 | Asset Retirement Costs for Energy Storage | - | - | - |
| 397 | **Total Energy Storage Plant** | | | | | 6,343,259 | 6,430,260 | 6,517,261 |
| 398 | | | | | | | | |
| 399 | | | | | | | | |
| 400 | **Accumulated Reserve Transmission Plant** | | | | | | | |
| 453 | **All - Transmission** | | | | | | | |
| 454 | | | 350 | | Land and Land Rights | 5,875,781 | 5,987,080 | 6,098,380 |
| 455 | | | 350.1 | | Land - Right of Way | 25,745,940 | 25,788,134 | 25,830,233 |
| 456 | | | 351.01 | | Computer Hardware | 5,345,329 | 5,697,529 | 6,050,364 |
| 457 | | | 351.02 | | Computer Software | 4,218,796 | 4,369,227 | 4,519,657 |
| 458 | | | 351.03 | | Communication Equipment | 15,979,178 | 16,245,804 | 16,516,608 |
| 459 | | | 352 | | Structures and Improvements | 24,094,395 | 24,492,246 | 24,893,993 |
| 460 | | | 353 | | Station Equipment | 226,568,499 | 227,025,732 | 229,249,769 |
| 461 | | | 353.1 | | Station Equipment - Step-up Xfmr and Aux | 6,590,383 | 6,617,500 | 6,644,616 |
| 462 | | | 354 | | Towers and Fixtures | 47,874,913 | 47,942,459 | 48,010,005 |
| 463 | | | 355 | | Poles and Fixtures | 134,058,103 | 135,274,890 | 136,713,372 |
| 464 | | | 356 | | Overhead Conductors and Devices | 100,531,539 | 100,914,503 | 101,393,453 |
| 465 | | | 357 | | Underground Conduit | 4,993 | 5,287 | 5,581 |
| 466 | | | 359 | | Roads and Trails | 3,035,332 | 3,047,308 | 3,059,283 |
| 467 | **Total Accumulated Reserve Transmission Plant** | | | | | 599,923,182 | 603,407,699 | 608,985,315 |
| 468 | | | | | | | | |
| 469 | | | | | | | | |

| | A | B | C | D | E | O | P | Q |
|---|---|---|---|---|---|---|---|---|
| 1 | **Public Service Company of New Mexico** | | | | | | | |
| 2 | **Schedule C-1 a** | | | | | | | |
| 3 | **Accumulated Provision for Depreciation and Amortization by Functional Classification** | | | | | | | |
| 4 | **Base Period Ending 6/30/2026** | | | | | | | |
| 5 | **Test Period Ending 9/30/2028** | | | | | | | |
| 6 | Link to WP Plant Lead Sheet | | | | | | | |
| 7 | Base Period data is historical Information from the Company's Books and Records. | | | | | | | |
| 8 | **This schedule is sponsored by PNM Witness Gutierrez** | | | | | | | |
| 9 | Please see the Direct Testimony of PNM Witness Gutierrez for discussion of adjustments/changes to the Base Period, Test Period, and Linkage Data. | | | | | | | |
| 10 | **Description** | **Location Number Note 6** | **FERC** | **Loc/FERC** | **FERC Description** | **Balance 4/1/26** | **Balance 5/1/26** | **Balance 6/1/26** |
| 470 | | | | | | | | |
| 471 | **Accumulated Reserve Distribution Plant** | | | | | | | |
| 665 | **All - Distribution** | | | | | | | |
| 666 | | | 360 | | Land and Land Rights | 255,704 | 255,704 | 255,704 |
| 667 | | | 360.1 | | Land - Right of Way | 1,242,172 | 1,243,762 | 1,245,353 |
| 668 | | | 361 | | Structures and Improvements | 12,096,540 | 12,201,049 | 12,306,272 |
| 669 | | | 362 | | Station Equipment | 107,550,603 | 107,975,821 | 108,637,907 |
| 670 | | | 363.01 | | Computer Hardware | 1,778,831 | 1,899,945 | 2,026,746 |
| 671 | | | 363.02 | | Computer Software | 15,035,570 | 15,902,982 | 16,812,273 |
| 672 | | | 363.03 | | Communication Equipment | 7,167,090 | 7,273,384 | 7,378,738 |
| 673 | | | 364 | | Poles, Towers and Fixtures | 95,855,501 | 96,093,142 | 96,995,195 |
| 674 | | | 365 | | Overhead Conductors and Devices | 112,596,525 | 113,084,674 | 113,803,476 |
| 675 | | | 366 | | Underground Conduit | 74,606,425 | 74,733,546 | 74,700,174 |
| 676 | | | 367 | | Underground Conductors and Devices | 145,905,465 | 146,542,389 | 147,209,621 |
| 677 | | | 368 | | Line Transformers | 124,969,592 | 125,512,350 | 126,088,892 |
| 678 | | | 369 | | Services | 52,443,885 | 52,704,654 | 52,968,763 |
| 679 | | | 369.1 | | Services - Underground | 84,207,266 | 84,642,763 | 85,086,103 |
| 680 | | | 370 | | Meters | 12,698,837 | 12,867,651 | 13,131,666 |
| 681 | | | 370.4 | | Meters - Grid Mod | - | 878 | 1,756 |
| 682 | | | 371 | | Installations on Customers' Premises | 8,621,527 | 8,621,527 | 8,621,527 |
| 683 | | | 371.1 | | Leased Flood Lighting | 266,445 | 266,445 | 266,445 |
| 684 | | | 373 | | Street Lighting and Signal Systems | 12,964,917 | 13,022,943 | 13,075,374 |
| 685 | | | 374 | | Asset Retirement Costs - Distribution | - | - | - |
| 686 | **Total Accumulated Reserve Distribution Plant** | | | | | 870,262,895 | 874,845,610 | 880,611,985 |
| 687 | | | | | | | | |
| 688 | | | | | | | | |

| | A | B | C | D | E | O | P | Q |
|---|---|---|---|---|---|---|---|---|
| 1 | **Public Service Company of New Mexico** | | | | | | | |
| 2 | **Schedule C-1 a** | | | | | | | |
| 3 | **Accumulated Provision for Depreciation and Amortization by Functional Classification** | | | | | | | |
| 4 | **Base Period Ending 6/30/2026** | | | | | | | |
| 5 | **Test Period Ending 9/30/2028** | | | | | | | |
| 6 | Link to WP Plant Lead Sheet | | | | | | | |
| 7 | Base Period data is historical Information from the Company's Books and Records. | | | | | | | |
| 8 | **This schedule is sponsored by PNM Witness Gutierrez** | | | | | | | |
| 9 | Please see the Direct Testimony of PNM Witness Gutierrez for discussion of adjustments/changes to the Base Period, Test Period, and Linkage Data. | | | | | | | |
| 10 | **Description** | **Location Number Note 6** | **FERC** | **Loc/FERC** | **FERC Description** | **Balance 4/1/26** | **Balance 5/1/26** | **Balance 6/1/26** |
| 689 | **Gross Plant G&I Plant (303,389-399)** | | | | | | | |
| 719 | **Total General & Intangible Plant** | | | | | | | |
| 720 | | | 303 | | Miscellaneous Intangible Plant | - | - | - |
| 721 | | | 389 | | Land and Land Rights | - | - | - |
| 722 | | | 390 | | Structures and Improvements | 29,643,449 | 29,759,468 | 29,622,414 |
| 723 | | | 390.1 | | Bulk Power Office Building Remodeling | 5,722,463 | 5,723,407 | 5,724,351 |
| 724 | | | 390.2 | | Bulk Power Office Building | 5,868,673 | 5,868,673 | 5,846,125 |
| 725 | | | 391 | | Office Furniture and Equipment | 2,765,644 | 2,788,158 | 2,810,672 |
| 726 | | | 391.1 | | Office Furniture and Equipment - PC System | - | - | - |
| 727 | | | 391.2 | | Office Furniture and Equipment - PC's | - | - | - |
| 728 | | | 391.3 | | Computer Hardware | - | - | - |
| 729 | | | 391.5 | | Computer Hardware - Solar | - | - | - |
| 730 | | | 391.7 | | Computer Hardware | - | - | - |
| 731 | | | 392 | | Transportation Equipment - Light | 2,032,535 | 2,051,543 | 2,070,452 |
| 732 | | | 392.1 | | Transportation Equipment - Heavy | 3,490,076 | 3,498,377 | 3,506,678 |
| 733 | | | 392.2 | | Transportation Equipment - Trailers | 3,376,796 | 3,400,469 | 3,424,142 |
| 734 | | | 392.4 | | Transportation Equipment - Leaseback | - | - | - |
| 735 | | | 393 | | Stores Equipment | 80,789 | 81,126 | 81,463 |
| 736 | | | 394 | | Tools, Shop & Garage Equipment | 9,238,420 | 9,318,242 | 9,398,849 |
| 737 | | | 395 | | Laboratory Equipment | 115,180 | 116,950 | 118,720 |
| 738 | | | 396 | | Power Operated Equipment | 4,063,804 | 4,079,105 | 4,094,406 |
| 739 | | | 397.01 | | Computer Hardware | 1,608,441 | 1,622,701 | 1,636,961 |
| 740 | | | 397.02 | | Computer Software | 19,389,376 | 19,997,526 | 20,607,114 |
| 741 | | | 397.03 | | Communication Equipment | - | - | - |
| 742 | | | 398 | | Miscellaneous Equipment | 1,145,343 | 1,151,000 | 1,156,626 |
| 743 | | | 399.1 | | ARO General Plant-1 | 16,422 | 16,448 | 16,474 |
| 744 | **Total Accumulated Reserve G&I Plant - PNM** | | | | | 88,557,411 | 89,473,192 | 90,115,447 |
| 745 | | | | | | | | |
| 746 | **Total Electric Plant In Service** | | 101/106 | | | 2,489,500,206 | 2,501,260,346 | 2,516,000,599 |
| 747 | | | | | | | | |
| 748 | **Electric Plant Purchased** | | 102 | | | | | |
| 749 | | | | | | | | |
| 750 | **Electric Plant Acquisition Adjustment** | | | | Acq. Adj. - Palo Verde Unit 1&2 (Drexel) | | | |
| 751 | | | | | Acq. Adj. - Palo Verde Unit 2 (First Chicago) | - | - | - |
| 752 | | | | | Acq. Adj. - (EIP) | - | - | - |
| 753 | **Electric Plant Acquisition Adjustment** | | 114 | | | - | - | - |
| 754 | | | | | | | | |
| 755 | **Total Electric Plant** | | | | | 2,489,500,206 | 2,501,260,346 | 2,516,000,599 |
| 756 | | | | | | | | |

| | A | B | C | D | E | O | P | Q |
|---|---|---|---|---|---|---|---|---|
| 1 | **Public Service Company of New Mexico** | | | | | | | |
| 2 | **Schedule C-1 a** | | | | | | | |
| 3 | **Accumulated Provision for Depreciation and Amortization by Functional Classification** | | | | | | | |
| 4 | **Base Period Ending 6/30/2026** | | | | | | | |
| 5 | **Test Period Ending 9/30/2028** | | | | | | | |
| 6 | Link to WP Plant Lead Sheet | | | | | | | |
| 7 | Base Period data is historical Information from the Company's Books and Records. | | | | | | | |
| 8 | **This schedule is sponsored by PNM Witness Gutierrez** | | | | | | | |
| 9 | Please see the Direct Testimony of PNM Witness Gutierrez for discussion of adjustments/changes to the Base Period, Test Period, and Linkage Data. | | | | | | | |
| 10 | **Description** | **Location Number Note 6** | **FERC** | **Loc/FERC** | **FERC Description** | **Balance 4/1/26** | **Balance 5/1/26** | **Balance 6/1/26** |
| 757 | | | | | | | | |
| 758 | **Corporate Unallocated** | 900 | 303 | 900303 | Miscellaneous Intangible Plant | - | - | - |
| 759 | | 900 | 389 | 900389 | Land and Land Rights | (66,097) | (66,097) | (66,097) |
| 760 | | 900 | 390 | 900390 | Structures and Improvements | 23,186,501 | 23,296,179 | 23,229,483 |
| 761 | | 900 | 390.1 | 900390.1 | Bulk Power Office Building Remodeling | - | - | - |
| 762 | | 900 | 390.2 | 900390.2 | Bulk Power Office Building | - | - | - |
| 763 | | 900 | 391 | 900391 | Office Furniture and Equipment | 306,662 | 310,615 | 314,607 |
| 764 | | 900 | 391.1 | 900391.1 | Office Furniture and Equipment - PC System | - | - | - |
| 765 | | 900 | 391.2 | 900391.2 | Office Furniture and Equipment - PC's | - | - | - |
| 766 | | 900 | 391.3 | 900391.3 | Computer Hardware | - | - | - |
| 767 | | 900 | 391.5 | 900391.5 | Computer Hardware - Solar | - | - | - |
| 768 | | 900 | 391.7 | 900391.7 | Computer Hardware | - | - | - |
| 769 | | 900 | 392 | 900392 | Transportation Equipment - Light | 137,613 | 139,113 | 140,612 |
| 770 | | 900 | 392.1 | 900392.1 | Transportation Equipment - Heavy | 13,542 | 13,754 | 13,966 |
| 771 | | 900 | 392.2 | 900392.2 | Transportation Equipment - Trailers | 6,832 | 6,861 | 6,889 |
| 772 | | 900 | 392.4 | 900392.4 | Transportation Equipment - Leaseback | - | - | - |
| 773 | | 900 | 393 | 900393 | Stores Equipment | - | - | - |
| 774 | | 900 | 394 | 900394 | Tools, Shop & Garage Equipment | 299,842 | 302,143 | 304,443 |
| 775 | | 900 | 395 | 900395 | Laboratory Equipment | - | - | - |
| 776 | | 900 | 396 | 900396 | Power Operated Equipment | 21,069 | 21,129 | 21,189 |
| 777 | | 900 | 397 | 900397 | Communication Equipment | - | - | - |
| 778 | | 900 | 397.01 | 900397.01 | Computer Hardware | 25,318,777 | 26,363,944 | 27,411,854 |
| 779 | | 900 | 397.02 | 900397.02 | Computer Software | 113,385,604 | 116,516,340 | 119,550,004 |
| 780 | | 900 | 397.03 | 900397.03 | Communication Equipment | 3,457,546 | 3,486,907 | 3,516,268 |
| 781 | | 900 | 397.2 | 900397.2 | Communication Equipment | - | - | - |
| 782 | | 900 | 397.3 | 900397.3 | Communication Equipment | - | - | - |
| 783 | | 900 | 398 | 900398 | Miscellaneous Equipment | - | - | - |
| 784 | | 900 | 399.1 | 900399.1 | ARO General Plant-1 | - | - | - |
| 785 | | | | | | | | |
| 786 | **Total Accumulated Reserve Corporate Plant** | | | | | 166,067,894 | 170,390,888 | 174,443,217 |
| 787 | | | | | | | | |
| 788 | **Total Electric Plant In Service - with Corporate** | | 101/106 | | | 2,655,568,099 | 2,671,651,235 | 2,690,443,816 |
| 790 | **Electric Plant Purchased - with Corporate** | | 102 | | | - | - | - |
| 792 | **Electric Plant Acq. Adj. - with Corporate** | | 114 | | | - | - | - |
| 793 | | | | | | | | |
| 794 | **Total Electric Plant - with Corporate** | | | | | 2,655,568,099 | 2,671,651,235 | 2,690,443,816 |

| | A | B | C | D | E | R | S | T | U |
|---|---|---|---|---|---|---|---|---|---|
| 1 | **Public Service Company of New Mexico** | | | | | | | | |
| 2 | **Schedule C-1 a** | | | | | | | | |
| 3 | **Accumulated Provision for Depreciation and Amortization by Functional Classification** | | | | | | | | |
| 4 | **Base Period Ending 6/30/2026** | | | | | | | | |
| 5 | **Test Period Ending 9/30/2028** | | | | | | | | |
| 6 | Link to WP Plant Lead Sheet | | | | | | | | |
| 7 | Base Period data is historical Information from the Company's Books and Records. | | | | | | | | |
| 8 | **This schedule is sponsored by PNM Witness Gutierrez** | | | | | | | | |
| 9 | Please see the Direct Testimony of PNM Witness Gutierrez for discussion of adjustments/changes to the Base Period, Test Period, and Linkage Data. | | | | | | | | |
| 10 | **Description** | **Location Number Note 6** | **FERC** | **Loc/FERC** | **FERC Description** | **Base Period Ending Balance 6/30/26** | **Four Corners Impairment Note 1** | **Remove PV Asset Retirement Costs Note 2** | **SRP Sale Note 3** |
| 11 | | | | | | | | | |
| 12 | **Accumulated Depreciation Production Plant** | | | | | | | | |
| 13 | **Steam Production** | | | | | | | | |
| 56 | **All - Steam** | | | | | | | | |
| 57 | | | 310 | | Land and Land Rights | - | - | - | |
| 58 | | | 310.1 | | Land Right of Way | 18,262 | - | - | |
| 59 | | | 311 | | Structures & Improvements | 7,800,466 | - | - | |
| 60 | | | 312 | | Boiler Plant Equipment | 93,395,116 | - | - | |
| 61 | | | 314 | | Turbogenerator Units | 37,245,966 | - | - | |
| 62 | | | 315 | | Accessory Electric Equipment | 10,182,536 | - | - | |
| 63 | | | 315.01 | | Computer Hardware | - | - | - | |
| 64 | | | 315.02 | | Computer Software | 609,097 | - | - | |
| 65 | | | 315.03 | | Communication Equipment | 192,743 | - | - | |
| 66 | | | 316 | | Misc Power Plant Equipment | 5,771,449 | - | - | |
| 67 | | | 317 | | Asset Retirement Costs - Steam | 3,778,674 | - | - | |
| 68 | **Total Steam Production Accumulated Reserve** | | | | | 158,994,308 | - | - | - |
| 69 | | | | | | | | | |
| 70 | | | | | | | | | |
| 71 | **Nuclear Production** | | | | | | | | |
| 129 | **All - Nuclear** | | | | | | | | |
| 130 | | | 320 | | Land and Land Rights | 0 | - | - | - |
| 131 | | | 320.1 | | Land - Right of Way | 29,933 | - | - | - |
| 132 | | | 321 | | Structures and Improvements | 111,193,063 | - | - | - |
| 133 | | | 322 | | Reactor Plant Equipment | 174,280,857 | - | - | - |
| 134 | | | 323 | | Turbogenerator Units | 60,741,739 | - | - | - |
| 135 | | | 324 | | Accessory Electric Equipment | 43,167,077 | - | - | - |
| 136 | | | 324.01 | | Computer Hardware | - | - | - | - |
| 137 | | | 324.02 | | Computer Software | 3,474,656 | - | - | - |
| 138 | | | 324.03 | | Communication Equipment | 193,996 | - | - | - |
| 139 | | | 325 | | Misc Power Plant Equipment | 38,135,329 | - | - | - |
| 140 | | | 326 | | Asset Retirement Costs Nuclear Prod Plant | 3,101,067 | - | (3,101,067) | - |
| 141 | **Total Nuclear Production Accumulated Reserve** | | | | | 434,317,717 | - | (3,101,067) | - |
| 142 | | | | | | | | | |
| 143 | | | | | | | | | |

| | A | B | C | D | E | R | S | T | U |
|---|---|---|---|---|---|---|---|---|---|
| 1 | **Public Service Company of New Mexico** | | | | | | | | |
| 2 | **Schedule C-1 a** | | | | | | | | |
| 3 | **Accumulated Provision for Depreciation and Amortization by Functional Classification** | | | | | | | | |
| 4 | **Base Period Ending 6/30/2026** | | | | | | | | |
| 5 | **Test Period Ending 9/30/2028** | | | | | | | | |
| 6 | Link to WP Plant Lead Sheet | | | | | | | | |
| 7 | Base Period data is historical Information from the Company's Books and Records. | | | | | | | | |
| 8 | **This schedule is sponsored by PNM Witness Gutierrez** | | | | | | | | |
| 9 | Please see the Direct Testimony of PNM Witness Gutierrez for discussion of adjustments/changes to the Base Period, Test Period, and Linkage Data. | | | | | | | | |
| 10 | **Description** | **Location Number Note 6** | **FERC** | **Loc/FERC** | **FERC Description** | **Base Period Ending Balance 6/30/26** | **Four Corners Impairment Note 1** | **Remove PV Asset Retirement Costs Note 2** | **SRP Sale Note 3** |
| 144 | **Solar Production** | | | | | | | | |
| 237 | **All - Solar** | | | | | | | | |
| 238 | | | 338.01 | | Land & Land Rights | - | - | - | - |
| 239 | | | 338.02 | | Structures and Improvements | 112,638 | - | - | - |
| 240 | | | 338.04 | | Solar Panels | 107,982,457 | - | - | - |
| 241 | | | 338.05 | | Collector System | 2,081,562 | - | - | - |
| 242 | | | 338.07 | | Solar Inverters | - | - | - | - |
| 243 | | | 338.08 | | Other Accessory Electrical Equipment | 11,875,171 | - | - | - |
| 244 | | | 338.09 | | Computer Hardware | 12,077 | - | - | - |
| 245 | | | 338.10 | | Computer Software | - | - | - | - |
| 246 | | | 338.11 | | Communication Equipment | 173,222 | - | - | - |
| 247 | | | 338.12 | | Misc. Power Plant Equipment | 1,855,745 | - | - | - |
| 248 | **Total Solar Production Accumulated Reserve** | | | | | 124,092,873 | - | - | - |
| 249 | | | | | | | | | |
| 250 | **Other Production** | | | | | | | | |
| 251 | | | | | | | | | |
| 252 | **Other Production - Gas:** | | | | | | | | |
| 339 | **All - Gas** | | 340 | | Land and Land Rights | - | - | - | |
| 340 | | | 340.1 | | Land - Right of Way | 749,696 | - | - | |
| 341 | | | 341 | | Structures and Improvements | 42,138,787 | - | - | |
| 342 | | | 342 | | Fuel Holders, Producers, Accessories | 57,222,237 | - | - | |
| 343 | | | 343 | | Prime Movers | - | - | - | |
| 344 | | | 344 | | Generators | 95,112,532 | - | - | |
| 345 | | | 345 | | Accessory Electric Equipment | 8,302,819 | - | - | |
| 346 | | | 345.01 | | Computer Hardware | 38,621 | - | - | |
| 347 | | | 345.02 | | Computer Software | 44,683 | - | - | |
| 348 | | | 345.03 | | Communication Equipment | 5,340 | - | - | |
| 349 | | | 346 | | Misc Power Plant Equipment | 10,681,930 | - | - | |
| 350 | | | 347 | | Asset Retirement Costs - Other Production | 1,174,384 | - | - | |
| 351 | **Total Other Production Plant - Gas** | | | | | 215,471,030 | - | - | - |
| 352 | | | | | | | | | |
| 353 | | | | | | | | | |
| 354 | **Total Other Production Accumulated Reserve** | | | | | 215,471,030 | - | - | - |

| | A | B | C | D | E | R | S | T | U |
|---|---|---|---|---|---|---|---|---|---|
| 1 | **Public Service Company of New Mexico** | | | | | | | | |
| 2 | **Schedule C-1 a** | | | | | | | | |
| 3 | **Accumulated Provision for Depreciation and Amortization by Functional Classification** | | | | | | | | |
| 4 | **Base Period Ending 6/30/2026** | | | | | | | | |
| 5 | **Test Period Ending 9/30/2028** | | | | | | | | |
| 6 | Link to WP Plant Lead Sheet | | | | | | | | |
| 7 | Base Period data is historical Information from the Company's Books and Records. | | | | | | | | |
| 8 | **This schedule is sponsored by PNM Witness Gutierrez** | | | | | | | | |
| 9 | Please see the Direct Testimony of PNM Witness Gutierrez for discussion of adjustments/changes to the Base Period, Test Period, and Linkage Data. | | | | | | | | |
| 10 | **Description** | **Location Number Note 6** | **FERC** | **Loc/FERC** | **FERC Description** | **Base Period Ending Balance 6/30/26** | **Four Corners Impairment Note 1** | **Remove PV Asset Retirement Costs Note 2** | **SRP Sale Note 3** |
| 355 | | | | | | | | | |
| 356 | **Total Accumulated Reserve Production** | | | | | 932,875,927 | - | (3,101,067) | - |
| 357 | | | | | | | | | |
| 358 | | | | | | | | | |
| 359 | **Accumulated Energy Storage Plant** | | | | | | | | |
| 386 | **All - Energy Storage** | | 387.01 | 387.01 | Land & Land Rights | - | | | |
| 387 | | | 387.02 | 387.02 | Structures & Improvements | 25,849 | | | |
| 388 | | | 387.03 | 387.03 | Energy Storage Equipment | 4,283,708 | | | |
| 389 | | | 387.05 | 387.05 | Collector System | 187,233 | | | |
| 390 | | | 387.06 | 387.06 | Generator Step-Up Transformers (GSU) | 66,442 | | | |
| 391 | | | 387.07 | 387.07 | Inverters | - | | | |
| 392 | | | 387.08 | 387.08 | Computer Hardware | - | | | |
| 393 | | | 387.09 | 387.09 | Computer Software | 248,005 | | | |
| 394 | | | 387.10 | 387.10 | Communication Equipment | 21,119 | | | |
| 395 | | | 387.11 | 387.11 | Misc. Energy Storage Equipment | 1,777,909 | | | |
| 396 | | | 387.12 | 387.12 | Asset Retirement Costs for Energy Storage | - | | | |
| 397 | **Total Energy Storage Plant** | | | | | 6,610,265 | - | - | - |
| 398 | | | | | | | | | |
| 399 | | | | | | | | | |
| 400 | **Accumulated Reserve Transmission Plant** | | | | | | | | |
| 453 | **All - Transmission** | | | | | | | | |
| 454 | | | 350 | | Land and Land Rights | 6,209,682 | - | - | - |
| 455 | | | 350.1 | | Land - Right of Way | 25,872,333 | - | - | - |
| 456 | | | 351.01 | | Computer Hardware | 4,534,589 | - | - | - |
| 457 | | | 351.02 | | Computer Software | 4,674,977 | - | - | - |
| 458 | | | 351.03 | | Communication Equipment | 16,305,427 | - | - | - |
| 459 | | | 352 | | Structures and Improvements | 25,004,394 | - | - | - |
| 460 | | | 353 | | Station Equipment | 231,431,263 | - | - | - |
| 461 | | | 353.1 | | Station Equipment - Step-up Xfmr and Aux | 6,671,732 | - | | |
| 462 | | | 354 | | Towers and Fixtures | 48,076,118 | - | - | - |
| 463 | | | 355 | | Poles and Fixtures | 138,033,604 | - | - | - |
| 464 | | | 356 | | Overhead Conductors and Devices | 101,714,545 | - | - | - |
| 465 | | | 357 | | Underground Conduit | 5,875 | - | - | - |
| 466 | | | 359 | | Roads and Trails | 3,071,259 | - | - | - |
| 467 | **Total Accumulated Reserve Transmission Plant** | | | | | 611,605,797 | - | - | - |
| 468 | | | | | | | | | |
| 469 | | | | | | | | | |

| | A | B | C | D | E | R | S | T | U |
|---|---|---|---|---|---|---|---|---|---|
| 1 | **Public Service Company of New Mexico** | | | | | | | | |
| 2 | **Schedule C-1 a** | | | | | | | | |
| 3 | **Accumulated Provision for Depreciation and Amortization by Functional Classification** | | | | | | | | |
| 4 | **Base Period Ending 6/30/2026** | | | | | | | | |
| 5 | **Test Period Ending 9/30/2028** | | | | | | | | |
| 6 | Link to WP Plant Lead Sheet | | | | | | | | |
| 7 | Base Period data is historical Information from the Company's Books and Records. | | | | | | | | |
| 8 | **This schedule is sponsored by PNM Witness Gutierrez** | | | | | | | | |
| 9 | Please see the Direct Testimony of PNM Witness Gutierrez for discussion of adjustments/changes to the Base Period, Test Period, and Linkage Data. | | | | | | | | |
| 10 | **Description** | **Location Number Note 6** | **FERC** | **Loc/FERC** | **FERC Description** | **Base Period Ending Balance 6/30/26** | **Four Corners Impairment Note 1** | **Remove PV Asset Retirement Costs Note 2** | **SRP Sale Note 3** |
| 470 | | | | | | | | | |
| 471 | **Accumulated Reserve Distribution Plant** | | | | | | | | |
| 665 | **All - Distribution** | | | | | | | | |
| 666 | | | 360 | | Land and Land Rights | 255,704 | - | | |
| 667 | | | 360.1 | | Land - Right of Way | 1,246,944 | - | | |
| 668 | | | 361 | | Structures and Improvements | 12,389,077 | - | | |
| 669 | | | 362 | | Station Equipment | 108,867,167 | - | | |
| 670 | | | 363.01 | | Computer Hardware | 1,869,487 | - | | |
| 671 | | | 363.02 | | Computer Software | 17,642,040 | - | | |
| 672 | | | 363.03 | | Communication Equipment | 7,058,066 | - | | |
| 673 | | | 364 | | Poles, Towers and Fixtures | 98,276,569 | - | | |
| 674 | | | 365 | | Overhead Conductors and Devices | 114,636,161 | - | | |
| 675 | | | 366 | | Underground Conduit | 74,984,873 | - | | |
| 676 | | | 367 | | Underground Conductors and Devices | 148,041,155 | - | | |
| 677 | | | 368 | | Line Transformers | 126,093,791 | - | | |
| 678 | | | 369 | | Services | 53,233,025 | - | | |
| 679 | | | 369.1 | | Services - Underground | 85,529,798 | - | | |
| 680 | | | 370 | | Meters | 12,871,407 | - | | |
| 681 | | | 370.4 | | Meters - Grid Mod | 2,633 | - | | |
| 682 | | | 371 | | Installations on Customers' Premises | 8,621,527 | - | | |
| 683 | | | 371.1 | | Leased Flood Lighting | 266,445 | - | | |
| 684 | | | 373 | | Street Lighting and Signal Systems | 13,133,398 | - | | |
| 685 | | | 374 | | Asset Retirement Costs - Distribution | - | - | | |
| 686 | **Total Accumulated Reserve Distribution Plant** | | | | | 885,019,267 | - | - | - |
| 687 | | | | | | | | | |
| 688 | | | | | | | | | |

| | A | B | C | D | E | R | S | T | U |
|---|---|---|---|---|---|---|---|---|---|
| 1 | **Public Service Company of New Mexico** | | | | | | | | |
| 2 | **Schedule C-1 a** | | | | | | | | |
| 3 | **Accumulated Provision for Depreciation and Amortization by Functional Classification** | | | | | | | | |
| 4 | **Base Period Ending 6/30/2026** | | | | | | | | |
| 5 | **Test Period Ending 9/30/2028** | | | | | | | | |
| 6 | Link to WP Plant Lead Sheet | | | | | | | | |
| 7 | Base Period data is historical Information from the Company's Books and Records. | | | | | | | | |
| 8 | **This schedule is sponsored by PNM Witness Gutierrez** | | | | | | | | |
| 9 | Please see the Direct Testimony of PNM Witness Gutierrez for discussion of adjustments/changes to the Base Period, Test Period, and Linkage Data. | | | | | | | | |
| 10 | **Description** | **Location Number Note 6** | **FERC** | **Loc/FERC** | **FERC Description** | **Base Period Ending Balance 6/30/26** | **Four Corners Impairment Note 1** | **Remove PV Asset Retirement Costs Note 2** | **SRP Sale Note 3** |
| 689 | **Gross Plant G&I Plant (303,389-399)** | | | | | | | | |
| 719 | **Total General & Intangible Plant** | | | | | | | | |
| 720 | | | 303 | | Miscellaneous Intangible Plant | - | - | - | - |
| 721 | | | 389 | | Land and Land Rights | - | - | - | - |
| 722 | | | 390 | | Structures and Improvements | 29,738,030 | - | - | - |
| 723 | | | 390.1 | | Bulk Power Office Building Remodeling | 5,725,295 | - | - | - |
| 724 | | | 390.2 | | Bulk Power Office Building | 5,846,125 | - | - | - |
| 725 | | | 391 | | Office Furniture and Equipment | 2,732,785 | - | - | - |
| 726 | | | 391.1 | | Office Furniture and Equipment - PC System | - | - | - | - |
| 727 | | | 391.2 | | Office Furniture and Equipment - PC's | - | - | - | - |
| 728 | | | 391.3 | | Computer Hardware | - | - | - | - |
| 729 | | | 391.5 | | Computer Hardware - Solar | - | - | - | - |
| 730 | | | 391.7 | | Computer Hardware | - | - | - | - |
| 731 | | | 392 | | Transportation Equipment - Light | 2,089,362 | - | - | - |
| 732 | | | 392.1 | | Transportation Equipment - Heavy | 3,514,980 | - | - | - |
| 733 | | | 392.2 | | Transportation Equipment - Trailers | 3,447,815 | - | - | - |
| 734 | | | 392.4 | | Transportation Equipment - Leaseback | - | - | - | - |
| 735 | | | 393 | | Stores Equipment | 81,800 | - | - | - |
| 736 | | | 394 | | Tools, Shop & Garage Equipment | 8,908,131 | - | - | - |
| 737 | | | 395 | | Laboratory Equipment | 120,491 | - | - | - |
| 738 | | | 396 | | Power Operated Equipment | 4,109,707 | - | - | - |
| 739 | | | 397.01 | | Computer Hardware | 1,651,220 | - | - | - |
| 740 | | | 397.02 | | Computer Software | 21,021,031 | - | - | - |
| 741 | | | 397.03 | | Communication Equipment | - | - | - | - |
| 742 | | | 398 | | Miscellaneous Equipment | 1,162,240 | - | - | - |
| 743 | | | 399.1 | | ARO General Plant-1 | 16,500 | - | - | - |
| 744 | **Total Accumulated Reserve G&I Plant - PNM** | | | | | 90,165,511 | - | - | - |
| 745 | | | | | | | | | |
| 746 | **Total Electric Plant In Service** | | 101/106 | | | 2,526,276,766 | - | (3,101,067) | - |
| 747 | | | | | | | | | |
| 748 | **Electric Plant Purchased** | | 102 | | | | | | |
| 749 | | | | | | | | | |
| 750 | **Electric Plant Acquisition Adjustment** | | | | Acq. Adj. - Palo Verde Unit 1&2 (Drexel) | | | | |
| 751 | | | | | Acq. Adj. - Palo Verde Unit 2 (First Chicago) | - | - | - | - |
| 752 | | | | | Acq. Adj. - (EIP) | - | - | - | - |
| 753 | **Electric Plant Acquisition Adjustment** | | 114 | | | - | - | - | - |
| 754 | | | | | | | | | |
| 755 | **Total Electric Plant** | | | | | 2,526,276,766 | - | (3,101,067) | - |
| 756 | | | | | | | | | |

| | A | B | C | D | E | R | S | T | U |
|---|---|---|---|---|---|---|---|---|---|
| 1 | **Public Service Company of New Mexico** | | | | | | | | |
| 2 | **Schedule C-1 a** | | | | | | | | |
| 3 | **Accumulated Provision for Depreciation and Amortization by Functional Classification** | | | | | | | | |
| 4 | **Base Period Ending 6/30/2026** | | | | | | | | |
| 5 | **Test Period Ending 9/30/2028** | | | | | | | | |
| 6 | Link to WP Plant Lead Sheet | | | | | | | | |
| 7 | Base Period data is historical Information from the Company's Books and Records. | | | | | | | | |
| 8 | **This schedule is sponsored by PNM Witness Gutierrez** | | | | | | | | |
| 9 | Please see the Direct Testimony of PNM Witness Gutierrez for discussion of adjustments/changes to the Base Period, Test Period, and Linkage Data. | | | | | | | | |
| 10 | **Description** | **Location Number Note 6** | **FERC** | **Loc/FERC** | **FERC Description** | **Base Period Ending Balance 6/30/26** | **Four Corners Impairment Note 1** | **Remove PV Asset Retirement Costs Note 2** | **SRP Sale Note 3** |
| 757 | | | | | | | | | |
| 758 | **Corporate Unallocated** | 900 | 303 | 900303 | Miscellaneous Intangible Plant | - | - | - | - |
| 759 | | 900 | 389 | 900389 | Land and Land Rights | (66,097) | - | - | - |
| 760 | | 900 | 390 | 900390 | Structures and Improvements | 23,342,198 | - | - | - |
| 761 | | 900 | 390.1 | 900390.1 | Bulk Power Office Building Remodeling | - | - | - | - |
| 762 | | 900 | 390.2 | 900390.2 | Bulk Power Office Building | - | - | - | - |
| 763 | | 900 | 391 | 900391 | Office Furniture and Equipment | 319,037 | - | - | - |
| 764 | | 900 | 391.1 | 900391.1 | Office Furniture and Equipment - PC System | - | - | - | - |
| 765 | | 900 | 391.2 | 900391.2 | Office Furniture and Equipment - PC's | - | - | - | - |
| 766 | | 900 | 391.3 | 900391.3 | Computer Hardware | - | - | - | - |
| 767 | | 900 | 391.5 | 900391.5 | Computer Hardware - Solar | - | - | - | - |
| 768 | | 900 | 391.7 | 900391.7 | Computer Hardware | - | - | - | - |
| 769 | | 900 | 392 | 900392 | Transportation Equipment - Light | 142,111 | - | - | - |
| 770 | | 900 | 392.1 | 900392.1 | Transportation Equipment - Heavy | 14,177 | - | - | - |
| 771 | | 900 | 392.2 | 900392.2 | Transportation Equipment - Trailers | 6,918 | - | - | - |
| 772 | | 900 | 392.4 | 900392.4 | Transportation Equipment - Leaseback | - | - | - | - |
| 773 | | 900 | 393 | 900393 | Stores Equipment | - | - | - | - |
| 774 | | 900 | 394 | 900394 | Tools, Shop & Garage Equipment | 306,743 | - | - | - |
| 775 | | 900 | 395 | 900395 | Laboratory Equipment | - | - | - | - |
| 776 | | 900 | 396 | 900396 | Power Operated Equipment | 21,249 | - | - | - |
| 777 | | 900 | 397 | 900397 | Communication Equipment | - | - | - | - |
| 778 | | 900 | 397.01 | 900397.01 | Computer Hardware | 18,728,521 | - | - | - |
| 779 | | 900 | 397.02 | 900397.02 | Computer Software | 116,565,242 | - | - | - |
| 780 | | 900 | 397.03 | 900397.03 | Communication Equipment | 3,545,630 | - | - | - |
| 781 | | 900 | 397.2 | 900397.2 | Communication Equipment | - | - | - | - |
| 782 | | 900 | 397.3 | 900397.3 | Communication Equipment | - | - | - | - |
| 783 | | 900 | 398 | 900398 | Miscellaneous Equipment | - | - | - | - |
| 784 | | 900 | 399.1 | 900399.1 | ARO General Plant-1 | - | - | - | - |
| 785 | | | | | | | | | |
| 786 | **Total Accumulated Reserve Corporate Plant** | | | | | 162,925,729 | - | - | - |
| 787 | | | | | | | | | |
| 788 | **Total Electric Plant In Service - with Corporate** | | 101/106 | | | 2,689,202,495 | - | (3,101,067) | - |
| 790 | **Electric Plant Purchased - with Corporate** | | 102 | | | - | - | - | - |
| 792 | **Electric Plant Acq. Adj. - with Corporate** | | 114 | | | - | - | - | - |
| 793 | | | | | | | | | |
| 794 | **Total Electric Plant - with Corporate** | | | | | 2,689,202,495 | - | (3,101,067) | - |

| | A | B | C | D | E | V | W | X |
|---|---|---|---|---|---|---|---|---|
| 1 | **Public Service Company of New Mexico** | | | | | | | |
| 2 | **Schedule C-1 a** | | | | | | | |
| 3 | **Accumulated Provision for Depreciation and Amortization by Functional Classification** | | | | | | | |
| 4 | **Base Period Ending 6/30/2026** | | | | | | | |
| 5 | **Test Period Ending 9/30/2028** | | | | | | | |
| 6 | Link to WP Plant Lead Sheet | | | | | | | |
| 7 | Base Period data is historical Information from the Company's Books and Records. | | | | | | | |
| 8 | **This schedule is sponsored by PNM Witness Gutierrez** | | | | | | | |
| 9 | Please see the Direct Testimony of PNM Witness Gutierrez for discussion of adjustments/changes to the Base Period, Test Period, and Linkage Data. | | | | | | | |
| 10 | **Description** | **Location Number Note 6** | **FERC** | **Loc/FERC** | **FERC Description** | **PV Lease Expiration Note 3** | **Shared Service Allocation Note 4** | **Total Base Period Adjustments Sum of Column S through Column W** |
| 11 | | | | | | | | |
| 12 | **Accumulated Depreciation Production Plant** | | | | | | | |
| 13 | **Steam Production** | | | | | | | |
| 56 | **All - Steam** | | | | | | | |
| 57 | | | 310 | | Land and Land Rights | | - | - |
| 58 | | | 310.1 | | Land Right of Way | | - | - |
| 59 | | | 311 | | Structures & Improvements | | - | - |
| 60 | | | 312 | | Boiler Plant Equipment | | - | - |
| 61 | | | 314 | | Turbogenerator Units | | - | - |
| 62 | | | 315 | | Accessory Electric Equipment | | - | - |
| 63 | | | 315.01 | | Computer Hardware | | - | - |
| 64 | | | 315.02 | | Computer Software | | - | - |
| 65 | | | 315.03 | | Communication Equipment | | - | - |
| 66 | | | 316 | | Misc Power Plant Equipment | | - | - |
| 67 | | | 317 | | Asset Retirement Costs - Steam | | - | - |
| 68 | **Total Steam Production Accumulated Reserve** | | | | | - | - | - |
| 69 | | | | | | | | |
| 70 | | | | | | | | |
| 71 | **Nuclear Production** | | | | | | | |
| 129 | **All - Nuclear** | | | | | | | |
| 130 | | | 320 | | Land and Land Rights | - | - | - |
| 131 | | | 320.1 | | Land - Right of Way | - | - | - |
| 132 | | | 321 | | Structures and Improvements | - | - | - |
| 133 | | | 322 | | Reactor Plant Equipment | - | - | - |
| 134 | | | 323 | | Turbogenerator Units | - | - | - |
| 135 | | | 324 | | Accessory Electric Equipment | - | - | - |
| 136 | | | 324.01 | | Computer Hardware | - | - | - |
| 137 | | | 324.02 | | Computer Software | - | - | - |
| 138 | | | 324.03 | | Communication Equipment | - | - | - |
| 139 | | | 325 | | Misc Power Plant Equipment | - | - | - |
| 140 | | | 326 | | Asset Retirement Costs Nuclear Prod Plant | - | - | (3,101,067) |
| 141 | **Total Nuclear Production Accumulated Reserve** | | | | | - | - | (3,101,067) |
| 142 | | | | | | | | |
| 143 | | | | | | | | |

| | A | B | C | D | E | V | W | X |
|---|---|---|---|---|---|---|---|---|
| 1 | **Public Service Company of New Mexico** | | | | | | | |
| 2 | **Schedule C-1 a** | | | | | | | |
| 3 | **Accumulated Provision for Depreciation and Amortization by Functional Classification** | | | | | | | |
| 4 | **Base Period Ending 6/30/2026** | | | | | | | |
| 5 | **Test Period Ending 9/30/2028** | | | | | | | |
| 6 | Link to WP Plant Lead Sheet | | | | | | | |
| 7 | Base Period data is historical Information from the Company's Books and Records. | | | | | | | |
| 8 | **This schedule is sponsored by PNM Witness Gutierrez** | | | | | | | |
| 9 | Please see the Direct Testimony of PNM Witness Gutierrez for discussion of adjustments/changes to the Base Period, Test Period, and Linkage Data. | | | | | | | |
| 10 | **Description** | **Location Number Note 6** | **FERC** | **Loc/FERC** | **FERC Description** | **PV Lease Expiration Note 3** | **Shared Service Allocation Note 4** | **Total Base Period Adjustments Sum of Column S through Column W** |
| 144 | **Solar Production** | | | | | | | |
| 237 | **All - Solar** | | | | | | | |
| 238 | | | 338.01 | | Land & Land Rights | - | - | - |
| 239 | | | 338.02 | | Structures and Improvements | - | - | - |
| 240 | | | 338.04 | | Solar Panels | - | - | - |
| 241 | | | 338.05 | | Collector System | - | - | - |
| 242 | | | 338.07 | | Solar Inverters | - | - | - |
| 243 | | | 338.08 | | Other Accessory Electrical Equipment | - | - | - |
| 244 | | | 338.09 | | Computer Hardware | - | - | - |
| 245 | | | 338.10 | | Computer Software | - | - | - |
| 246 | | | 338.11 | | Communication Equipment | - | - | - |
| 247 | | | 338.12 | | Misc. Power Plant Equipment | - | - | - |
| 248 | **Total Solar Production Accumulated Reserve** | | | | | - | - | - |
| 249 | | | | | | | | |
| 250 | **Other Production** | | | | | | | |
| 251 | | | | | | | | |
| 252 | **Other Production - Gas:** | | | | | | | |
| 339 | **All - Gas** | | 340 | | Land and Land Rights | | - | - |
| 340 | | | 340.1 | | Land - Right of Way | | - | - |
| 341 | | | 341 | | Structures and Improvements | | - | - |
| 342 | | | 342 | | Fuel Holders, Producers, Accessories | | - | - |
| 343 | | | 343 | | Prime Movers | | - | - |
| 344 | | | 344 | | Generators | | - | - |
| 345 | | | 345 | | Accessory Electric Equipment | | - | - |
| 346 | | | 345.01 | | Computer Hardware | | - | - |
| 347 | | | 345.02 | | Computer Software | | - | - |
| 348 | | | 345.03 | | Communication Equipment | | - | - |
| 349 | | | 346 | | Misc Power Plant Equipment | | - | - |
| 350 | | | 347 | | Asset Retirement Costs - Other Production | | - | - |
| 351 | **Total Other Production Plant - Gas** | | | | | - | - | - |
| 352 | | | | | | | | |
| 353 | | | | | | | | |
| 354 | **Total Other Production Accumulated Reserve** | | | | | - | - | - |

| | A | B | C | D | E | V | W | X |
|---|---|---|---|---|---|---|---|---|
| 1 | **Public Service Company of New Mexico** | | | | | | | |
| 2 | **Schedule C-1 a** | | | | | | | |
| 3 | **Accumulated Provision for Depreciation and Amortization by Functional Classification** | | | | | | | |
| 4 | **Base Period Ending 6/30/2026** | | | | | | | |
| 5 | **Test Period Ending 9/30/2028** | | | | | | | |
| 6 | Link to WP Plant Lead Sheet | | | | | | | |
| 7 | Base Period data is historical Information from the Company's Books and Records. | | | | | | | |
| 8 | **This schedule is sponsored by PNM Witness Gutierrez** | | | | | | | |
| 9 | Please see the Direct Testimony of PNM Witness Gutierrez for discussion of adjustments/changes to the Base Period, Test Period, and Linkage Data. | | | | | | | |
| 10 | **Description** | **Location Number Note 6** | **FERC** | **Loc/FERC** | **FERC Description** | **PV Lease Expiration Note 3** | **Shared Service Allocation Note 4** | **Total Base Period Adjustments Sum of Column S through Column W** |
| 355 | | | | | | | | |
| 356 | **Total Accumulated Reserve Production** | | | | | - | - | (3,101,067) |
| 357 | | | | | | | | |
| 358 | | | | | | | | |
| 359 | **Accumulated Energy Storage Plant** | | | | | | | |
| 386 | **All - Energy Storage** | | 387.01 | 387.01 | Land & Land Rights | | | - |
| 387 | | | 387.02 | 387.02 | Structures & Improvements | | | - |
| 388 | | | 387.03 | 387.03 | Energy Storage Equipment | | | - |
| 389 | | | 387.05 | 387.05 | Collector System | | | - |
| 390 | | | 387.06 | 387.06 | Generator Step-Up Transformers (GSU) | | | - |
| 391 | | | 387.07 | 387.07 | Inverters | | | - |
| 392 | | | 387.08 | 387.08 | Computer Hardware | | | - |
| 393 | | | 387.09 | 387.09 | Computer Software | | | - |
| 394 | | | 387.10 | 387.10 | Communication Equipment | | | - |
| 395 | | | 387.11 | 387.11 | Misc. Energy Storage Equipment | | | - |
| 396 | | | 387.12 | 387.12 | Asset Retirement Costs for Energy Storage | | | - |
| 397 | **Total Energy Storage Plant** | | | | | - | - | - |
| 398 | | | | | | | | |
| 399 | | | | | | | | |
| 400 | **Accumulated Reserve Transmission Plant** | | | | | | | |
| 453 | **All - Transmission** | | | | | | | |
| 454 | | | 350 | | Land and Land Rights | - | - | - |
| 455 | | | 350.1 | | Land - Right of Way | - | - | - |
| 456 | | | 351.01 | | Computer Hardware | - | - | - |
| 457 | | | 351.02 | | Computer Software | - | - | - |
| 458 | | | 351.03 | | Communication Equipment | - | - | - |
| 459 | | | 352 | | Structures and Improvements | - | - | - |
| 460 | | | 353 | | Station Equipment | - | - | - |
| 461 | | | 353.1 | | Station Equipment - Step-up Xfmr and Aux | | | - |
| 462 | | | 354 | | Towers and Fixtures | - | - | - |
| 463 | | | 355 | | Poles and Fixtures | - | - | - |
| 464 | | | 356 | | Overhead Conductors and Devices | - | - | - |
| 465 | | | 357 | | Underground Conduit | - | - | - |
| 466 | | | 359 | | Roads and Trails | - | - | - |
| 467 | **Total Accumulated Reserve Transmission Plant** | | | | | - | - | - |
| 468 | | | | | | | | |
| 469 | | | | | | | | |

| | A | B | C | D | E | V | W | X |
|---|---|---|---|---|---|---|---|---|
| 1 | **Public Service Company of New Mexico** | | | | | | | |
| 2 | **Schedule C-1 a** | | | | | | | |
| 3 | **Accumulated Provision for Depreciation and Amortization by Functional Classification** | | | | | | | |
| 4 | **Base Period Ending 6/30/2026** | | | | | | | |
| 5 | **Test Period Ending 9/30/2028** | | | | | | | |
| 6 | Link to WP Plant Lead Sheet | | | | | | | |
| 7 | Base Period data is historical Information from the Company's Books and Records. | | | | | | | |
| 8 | **This schedule is sponsored by PNM Witness Gutierrez** | | | | | | | |
| 9 | Please see the Direct Testimony of PNM Witness Gutierrez for discussion of adjustments/changes to the Base Period, Test Period, and Linkage Data. | | | | | | | |
| 10 | **Description** | **Location Number Note 6** | **FERC** | **Loc/FERC** | **FERC Description** | **PV Lease Expiration Note 3** | **Shared Service Allocation Note 4** | **Total Base Period Adjustments Sum of Column S through Column W** |
| 470 | | | | | | | | |
| 471 | **Accumulated Reserve Distribution Plant** | | | | | | | |
| 665 | **All - Distribution** | | | | | | | |
| 666 | | | 360 | | Land and Land Rights | | | - |
| 667 | | | 360.1 | | Land - Right of Way | | | - |
| 668 | | | 361 | | Structures and Improvements | | | - |
| 669 | | | 362 | | Station Equipment | | | - |
| 670 | | | 363.01 | | Computer Hardware | | | - |
| 671 | | | 363.02 | | Computer Software | | | - |
| 672 | | | 363.03 | | Communication Equipment | | | - |
| 673 | | | 364 | | Poles, Towers and Fixtures | | | - |
| 674 | | | 365 | | Overhead Conductors and Devices | | | - |
| 675 | | | 366 | | Underground Conduit | | | - |
| 676 | | | 367 | | Underground Conductors and Devices | | | - |
| 677 | | | 368 | | Line Transformers | | | - |
| 678 | | | 369 | | Services | | | - |
| 679 | | | 369.1 | | Services - Underground | | | - |
| 680 | | | 370 | | Meters | | | - |
| 681 | | | 370.4 | | Meters - Grid Mod | | | - |
| 682 | | | 371 | | Installations on Customers' Premises | | | - |
| 683 | | | 371.1 | | Leased Flood Lighting | | | - |
| 684 | | | 373 | | Street Lighting and Signal Systems | | | - |
| 685 | | | 374 | | Asset Retirement Costs - Distribution | | | - |
| 686 | **Total Accumulated Reserve Distribution Plant** | | | | | - | - | - |
| 687 | | | | | | | | |
| 688 | | | | | | | | |

| | A | B | C | D | E | V | W | X |
|---|---|---|---|---|---|---|---|---|
| 1 | **Public Service Company of New Mexico** | | | | | | | |
| 2 | **Schedule C-1 a** | | | | | | | |
| 3 | **Accumulated Provision for Depreciation and Amortization by Functional Classification** | | | | | | | |
| 4 | **Base Period Ending 6/30/2026** | | | | | | | |
| 5 | **Test Period Ending 9/30/2028** | | | | | | | |
| 6 | Link to WP Plant Lead Sheet | | | | | | | |
| 7 | Base Period data is historical Information from the Company's Books and Records. | | | | | | | |
| 8 | **This schedule is sponsored by PNM Witness Gutierrez** | | | | | | | |
| 9 | Please see the Direct Testimony of PNM Witness Gutierrez for discussion of adjustments/changes to the Base Period, Test Period, and Linkage Data. | | | | | | | |
| 10 | **Description** | **Location Number Note 6** | **FERC** | **Loc/FERC** | **FERC Description** | **PV Lease Expiration Note 3** | **Shared Service Allocation Note 4** | **Total Base Period Adjustments Sum of Column S through Column W** |
| 689 | **Gross Plant G&I Plant (303,389-399)** | | | | | | | |
| 719 | **Total General & Intangible Plant** | | | | | | | |
| 720 | | | 303 | | Miscellaneous Intangible Plant | - | - | - |
| 721 | | | 389 | | Land and Land Rights | - | - | - |
| 722 | | | 390 | | Structures and Improvements | - | - | - |
| 723 | | | 390.1 | | Bulk Power Office Building Remodeling | - | - | - |
| 724 | | | 390.2 | | Bulk Power Office Building | - | - | - |
| 725 | | | 391 | | Office Furniture and Equipment | - | - | - |
| 726 | | | 391.1 | | Office Furniture and Equipment - PC System | - | - | - |
| 727 | | | 391.2 | | Office Furniture and Equipment - PC's | - | - | - |
| 728 | | | 391.3 | | Computer Hardware | - | - | - |
| 729 | | | 391.5 | | Computer Hardware - Solar | - | - | - |
| 730 | | | 391.7 | | Computer Hardware | - | - | - |
| 731 | | | 392 | | Transportation Equipment - Light | - | - | - |
| 732 | | | 392.1 | | Transportation Equipment - Heavy | - | - | - |
| 733 | | | 392.2 | | Transportation Equipment - Trailers | - | - | - |
| 734 | | | 392.4 | | Transportation Equipment - Leaseback | - | - | - |
| 735 | | | 393 | | Stores Equipment | - | - | - |
| 736 | | | 394 | | Tools, Shop & Garage Equipment | - | - | - |
| 737 | | | 395 | | Laboratory Equipment | - | - | - |
| 738 | | | 396 | | Power Operated Equipment | - | - | - |
| 739 | | | 397.01 | | Computer Hardware | - | - | - |
| 740 | | | 397.02 | | Computer Software | - | - | - |
| 741 | | | 397.03 | | Communication Equipment | - | - | - |
| 742 | | | 398 | | Miscellaneous Equipment | - | - | - |
| 743 | | | 399.1 | | ARO General Plant-1 | - | - | - |
| 744 | **Total Accumulated Reserve G&I Plant - PNM** | | | | | - | - | - |
| 745 | | | | | | | | |
| 746 | **Total Electric Plant In Service** | | 101/106 | | | - | - | (3,101,067) |
| 747 | | | | | | | | |
| 748 | **Electric Plant Purchased** | | 102 | | | | | |
| 749 | | | | | | | | |
| 750 | **Electric Plant Acquisition Adjustment** | | | | Acq. Adj. - Palo Verde Unit 1&2 (Drexel) | | | - |
| 751 | | | | | Acq. Adj. - Palo Verde Unit 2 (First Chicago) | - | - | - |
| 752 | | | | | Acq. Adj. - (EIP) | - | - | - |
| 753 | **Electric Plant Acquisition Adjustment** | | 114 | | | - | - | - |
| 754 | | | | | | | | |
| 755 | **Total Electric Plant** | | | | | - | - | (3,101,067) |
| 756 | | | | | | | | |

| | A | B | C | D | E | V | W | X |
|---|---|---|---|---|---|---|---|---|
| 1 | **Public Service Company of New Mexico** | | | | | | | |
| 2 | **Schedule C-1 a** | | | | | | | |
| 3 | **Accumulated Provision for Depreciation and Amortization by Functional Classification** | | | | | | | |
| 4 | **Base Period Ending 6/30/2026** | | | | | | | |
| 5 | **Test Period Ending 9/30/2028** | | | | | | | |
| 6 | Link to WP Plant Lead Sheet | | | | | | | |
| 7 | Base Period data is historical Information from the Company's Books and Records. | | | | | | | |
| 8 | **This schedule is sponsored by PNM Witness Gutierrez** | | | | | | | |
| 9 | Please see the Direct Testimony of PNM Witness Gutierrez for discussion of adjustments/changes to the Base Period, Test Period, and Linkage Data. | | | | | | | |
| 10 | **Description** | **Location Number Note 6** | **FERC** | **Loc/FERC** | **FERC Description** | **PV Lease Expiration Note 3** | **Shared Service Allocation Note 4** | **Total Base Period Adjustments Sum of Column S through Column W** |
| 757 | | | | | | | | |
| 758 | **Corporate Unallocated** | 900 | 303 | 900303 | Miscellaneous Intangible Plant | - | - | - |
| 759 | | 900 | 389 | 900389 | Land and Land Rights | - | 19,532 | 19,532 |
| 760 | | 900 | 390 | 900390 | Structures and Improvements | - | (6,693,161) | (6,693,161) |
| 761 | | 900 | 390.1 | 900390.1 | Bulk Power Office Building Remodeling | - | - | - |
| 762 | | 900 | 390.2 | 900390.2 | Bulk Power Office Building | - | - | - |
| 763 | | 900 | 391 | 900391 | Office Furniture and Equipment | - | (106,055) | (106,055) |
| 764 | | 900 | 391.1 | 900391.1 | Office Furniture and Equipment - PC System | - | - | - |
| 765 | | 900 | 391.2 | 900391.2 | Office Furniture and Equipment - PC's | - | - | - |
| 766 | | 900 | 391.3 | 900391.3 | Computer Hardware | - | - | - |
| 767 | | 900 | 391.5 | 900391.5 | Computer Hardware - Solar | - | - | - |
| 768 | | 900 | 391.7 | 900391.7 | Computer Hardware | - | - | - |
| 769 | | 900 | 392 | 900392 | Transportation Equipment - Light | - | (49,867) | (49,867) |
| 770 | | 900 | 392.1 | 900392.1 | Transportation Equipment - Heavy | - | (4,189) | (4,189) |
| 771 | | 900 | 392.2 | 900392.2 | Transportation Equipment - Trailers | - | (2,428) | (2,428) |
| 772 | | 900 | 392.4 | 900392.4 | Transportation Equipment - Leaseback | - | - | - |
| 773 | | 900 | 393 | 900393 | Stores Equipment | - | - | - |
| 774 | | 900 | 394 | 900394 | Tools, Shop & Garage Equipment | - | (105,328) | (105,328) |
| 775 | | 900 | 395 | 900395 | Laboratory Equipment | - | - | - |
| 776 | | 900 | 396 | 900396 | Power Operated Equipment | - | (6,279) | (6,279) |
| 777 | | 900 | 397 | 900397 | Communication Equipment | - | - | - |
| 778 | | 900 | 397.01 | 900397.01 | Computer Hardware | - | (5,670,870) | (5,670,870) |
| 779 | | 900 | 397.02 | 900397.02 | Computer Software | - | (36,427,282) | (36,427,282) |
| 780 | | 900 | 397.03 | 900397.03 | Communication Equipment | - | (1,244,161) | (1,244,161) |
| 781 | | 900 | 397.2 | 900397.2 | Communication Equipment | - | - | - |
| 782 | | 900 | 397.3 | 900397.3 | Communication Equipment | - | - | - |
| 783 | | 900 | 398 | 900398 | Miscellaneous Equipment | - | - | - |
| 784 | | 900 | 399.1 | 900399.1 | ARO General Plant-1 | - | - | - |
| 785 | | | | | | | | |
| 786 | **Total Accumulated Reserve Corporate Plant** | | | | | - | (50,290,088) | (50,290,088) |
| 787 | | | | | | | | |
| 788 | **Total Electric Plant In Service - with Corporate** | | 101/106 | | | - | (50,290,088) | (53,391,156) |
| 790 | **Electric Plant Purchased - with Corporate** | | 102 | | | - | - | |
| 792 | **Electric Plant Acq. Adj. - with Corporate** | | 114 | | | - | - | - |
| 793 | | | | | | | | |
| 794 | **Total Electric Plant - with Corporate** | | | | | - | (50,290,088) | (53,391,156) |

| | A | B | C | D | E | Y | Z | AA |
|---|---|---|---|---|---|---|---|---|
| 1 | **Public Service Company of New Mexico** | | | | | | | |
| 2 | **Schedule C-1 a** | | | | | | | |
| 3 | **Accumulated Provision for Depreciation and Amortization by Functional Classification** | | | | | | | |
| 4 | **Base Period Ending 6/30/2026** | | | | | | | |
| 5 | **Test Period Ending 9/30/2028** | | | | | | | |
| 6 | Link to WP Plant Lead Sheet | | | | | | | |
| 7 | Base Period data is historical Information from the Company's Books and Records. | | | | | | | |
| 8 | **This schedule is sponsored by PNM Witness Gutierrez** | | | | | | | |
| 9 | Please see the Direct Testimony of PNM Witness Gutierrez for discussion of adjustments/changes to the Base Period, Test Period, and Linkage Data. | | | | | | | |
| 10 | **Description** | **Location Number Note 6** | **FERC** | **Loc/FERC** | **FERC Description** | **Adjusted Base Period Ending Balance 6/30/26 Column R + Column X** | **Reference** | **Linkage Beginning Balance 7/1/26** |
| 11 | | | | | | | | |
| 12 | **Accumulated Depreciation Production Plant** | | | | | | | |
| 13 | **Steam Production** | | | | | | | |
| 56 | **All - Steam** | | | | | | | |
| 57 | | | 310 | | Land and Land Rights | - | | - |
| 58 | | | 310.1 | | Land Right of Way | 18,262 | | 18,262 |
| 59 | | | 311 | | Structures & Improvements | 7,800,466 | | 7,800,466 |
| 60 | | | 312 | | Boiler Plant Equipment | 93,395,116 | | 93,395,116 |
| 61 | | | 314 | | Turbogenerator Units | 37,245,966 | | 37,245,966 |
| 62 | | | 315 | | Accessory Electric Equipment | 10,182,536 | | 10,182,536 |
| 63 | | | 315.01 | | Computer Hardware | - | | - |
| 64 | | | 315.02 | | Computer Software | 609,097 | | 609,097 |
| 65 | | | 315.03 | | Communication Equipment | 192,743 | | 192,743 |
| 66 | | | 316 | | Misc Power Plant Equipment | 5,771,449 | | 5,771,449 |
| 67 | | | 317 | | Asset Retirement Costs - Steam | 3,778,674 | | 3,778,674 |
| 68 | **Total Steam Production Accumulated Reserve** | | | | | 158,994,308 | | 158,994,308 |
| 69 | | | | | | | | |
| 70 | | | | | | | | |
| 71 | **Nuclear Production** | | | | | | | |
| 129 | **All - Nuclear** | | | | | | | |
| 130 | | | 320 | | Land and Land Rights | 0 | | 0 |
| 131 | | | 320.1 | | Land - Right of Way | 29,933 | | 29,933 |
| 132 | | | 321 | | Structures and Improvements | 111,193,063 | | 111,193,063 |
| 133 | | | 322 | | Reactor Plant Equipment | 174,280,857 | | 174,280,857 |
| 134 | | | 323 | | Turbogenerator Units | 60,741,739 | | 60,741,739 |
| 135 | | | 324 | | Accessory Electric Equipment | 43,167,077 | | 43,167,077 |
| 136 | | | 324.01 | | Computer Hardware | - | | - |
| 137 | | | 324.02 | | Computer Software | 3,474,656 | | 3,474,656 |
| 138 | | | 324.03 | | Communication Equipment | 193,996 | | 193,996 |
| 139 | | | 325 | | Misc Power Plant Equipment | 38,135,329 | | 38,135,329 |
| 140 | | | 326 | | Asset Retirement Costs Nuclear Prod Plant | - | | - |
| 141 | **Total Nuclear Production Accumulated Reserve** | | | | | 431,216,649 | | 431,216,649 |
| 142 | | | | | | | | |
| 143 | | | | | | | | |

| | A | B | C | D | E | Y | Z | AA |
|---|---|---|---|---|---|---|---|---|
| 1 | **Public Service Company of New Mexico** | | | | | | | |
| 2 | **Schedule C-1 a** | | | | | | | |
| 3 | **Accumulated Provision for Depreciation and Amortization by Functional Classification** | | | | | | | |
| 4 | **Base Period Ending 6/30/2026** | | | | | | | |
| 5 | **Test Period Ending 9/30/2028** | | | | | | | |
| 6 | Link to WP Plant Lead Sheet | | | | | | | |
| 7 | Base Period data is historical Information from the Company's Books and Records. | | | | | | | |
| 8 | **This schedule is sponsored by PNM Witness Gutierrez** | | | | | | | |
| 9 | Please see the Direct Testimony of PNM Witness Gutierrez for discussion of adjustments/changes to the Base Period, Test Period, and Linkage Data. | | | | | | | |
| 10 | **Description** | **Location Number Note 6** | **FERC** | **Loc/FERC** | **FERC Description** | **Adjusted Base Period Ending Balance 6/30/26 Column R + Column X** | **Reference** | **Linkage Beginning Balance 7/1/26** |
| 144 | **Solar Production** | | | | | | | |
| 237 | **All - Solar** | | | | | | | |
| 238 | | | 338.01 | | Land & Land Rights | - | | - |
| 239 | | | 338.02 | | Structures and Improvements | 112,638 | | 112,638 |
| 240 | | | 338.04 | | Solar Panels | 107,982,457 | | 107,982,457 |
| 241 | | | 338.05 | | Collector System | 2,081,562 | | 2,081,562 |
| 242 | | | 338.07 | | Solar Inverters | - | | - |
| 243 | | | 338.08 | | Other Accessory Electrical Equipment | 11,875,171 | | 11,875,171 |
| 244 | | | 338.09 | | Computer Hardware | 12,077 | | 12,077 |
| 245 | | | 338.10 | | Computer Software | - | | - |
| 246 | | | 338.11 | | Communication Equipment | 173,222 | | 173,222 |
| 247 | | | 338.12 | | Misc. Power Plant Equipment | 1,855,745 | | 1,855,745 |
| 248 | **Total Solar Production Accumulated Reserve** | | | | | 124,092,873 | | 124,092,873 |
| 249 | | | | | | | | |
| 250 | **Other Production** | | | | | | | |
| 251 | | | | | | | | |
| 252 | **Other Production - Gas:** | | | | | | | |
| 339 | **All - Gas** | | 340 | | Land and Land Rights | - | | - |
| 340 | | | 340.1 | | Land - Right of Way | 749,696 | | 749,696 |
| 341 | | | 341 | | Structures and Improvements | 42,138,787 | | 42,138,787 |
| 342 | | | 342 | | Fuel Holders, Producers, Accessories | 57,222,237 | | 57,222,237 |
| 343 | | | 343 | | Prime Movers | - | | - |
| 344 | | | 344 | | Generators | 95,112,532 | | 95,112,532 |
| 345 | | | 345 | | Accessory Electric Equipment | 8,302,819 | | 8,302,819 |
| 346 | | | 345.01 | | Computer Hardware | 38,621 | | 38,621 |
| 347 | | | 345.02 | | Computer Software | 44,683 | | 44,683 |
| 348 | | | 345.03 | | Communication Equipment | 5,340 | | 5,340 |
| 349 | | | 346 | | Misc Power Plant Equipment | 10,681,930 | | 10,681,930 |
| 350 | | | 347 | | Asset Retirement Costs - Other Production | 1,174,384 | | 1,174,384 |
| 351 | **Total Other Production Plant - Gas** | | | | | 215,471,030 | | 215,471,030 |
| 352 | | | | | | | | |
| 353 | | | | | | | | |
| 354 | **Total Other Production Accumulated Reserve** | | | | | 215,471,030 | | 215,471,030 |

| | A | B | C | D | E | Y | Z | AA |
|---|---|---|---|---|---|---|---|---|
| 1 | **Public Service Company of New Mexico** | | | | | | | |
| 2 | **Schedule C-1 a** | | | | | | | |
| 3 | **Accumulated Provision for Depreciation and Amortization by Functional Classification** | | | | | | | |
| 4 | **Base Period Ending 6/30/2026** | | | | | | | |
| 5 | **Test Period Ending 9/30/2028** | | | | | | | |
| 6 | Link to WP Plant Lead Sheet | | | | | | | |
| 7 | Base Period data is historical Information from the Company's Books and Records. | | | | | | | |
| 8 | **This schedule is sponsored by PNM Witness Gutierrez** | | | | | | | |
| 9 | Please see the Direct Testimony of PNM Witness Gutierrez for discussion of adjustments/changes to the Base Period, Test Period, and Linkage Data. | | | | | | | |
| 10 | **Description** | **Location Number Note 6** | **FERC** | **Loc/FERC** | **FERC Description** | **Adjusted Base Period Ending Balance 6/30/26 Column R + Column X** | **Reference** | **Linkage Beginning Balance 7/1/26** |
| 355 | | | | | | | | |
| 356 | **Total Accumulated Reserve Production** | | | | | 929,774,860 | | 929,774,860 |
| 357 | | | | | | | | |
| 358 | | | | | | | | |
| 359 | **Accumulated Energy Storage Plant** | | | | | | | |
| 386 | **All - Energy Storage** | | 387.01 | 387.01 | Land & Land Rights | - | | - |
| 387 | | | 387.02 | 387.02 | Structures & Improvements | 25,849 | | 25,849 |
| 388 | | | 387.03 | 387.03 | Energy Storage Equipment | 4,283,708 | | 4,283,708 |
| 389 | | | 387.05 | 387.05 | Collector System | 187,233 | | 187,233 |
| 390 | | | 387.06 | 387.06 | Generator Step-Up Transformers (GSU) | 66,442 | | 66,442 |
| 391 | | | 387.07 | 387.07 | Inverters | - | | - |
| 392 | | | 387.08 | 387.08 | Computer Hardware | - | | - |
| 393 | | | 387.09 | 387.09 | Computer Software | 248,005 | | 248,005 |
| 394 | | | 387.10 | 387.10 | Communication Equipment | 21,119 | | 21,119 |
| 395 | | | 387.11 | 387.11 | Misc. Energy Storage Equipment | 1,777,909 | | 1,777,909 |
| 396 | | | 387.12 | 387.12 | Asset Retirement Costs for Energy Storage | - | | - |
| 397 | **Total Energy Storage Plant** | | | | | 6,610,265 | | 6,610,265 |
| 398 | | | | | | | | |
| 399 | | | | | | | | |
| 400 | **Accumulated Reserve Transmission Plant** | | | | | | | |
| 453 | **All - Transmission** | | | | | | | |
| 454 | | | 350 | | Land and Land Rights | 6,209,682 | | 6,209,682 |
| 455 | | | 350.1 | | Land - Right of Way | 25,872,333 | | 25,872,333 |
| 456 | | | 351.01 | | Computer Hardware | 4,534,589 | | 4,534,589 |
| 457 | | | 351.02 | | Computer Software | 4,674,977 | | 4,674,977 |
| 458 | | | 351.03 | | Communication Equipment | 16,305,427 | | 16,305,427 |
| 459 | | | 352 | | Structures and Improvements | 25,004,394 | | 25,004,394 |
| 460 | | | 353 | | Station Equipment | 231,431,263 | | 231,431,263 |
| 461 | | | 353.1 | | Station Equipment - Step-up Xfmr and Aux | 6,671,732 | | 6,671,732 |
| 462 | | | 354 | | Towers and Fixtures | 48,076,118 | | 48,076,118 |
| 463 | | | 355 | | Poles and Fixtures | 138,033,604 | | 138,033,604 |
| 464 | | | 356 | | Overhead Conductors and Devices | 101,714,545 | | 101,714,545 |
| 465 | | | 357 | | Underground Conduit | 5,875 | | 5,875 |
| 466 | | | 359 | | Roads and Trails | 3,071,259 | | 3,071,259 |
| 467 | **Total Accumulated Reserve Transmission Plant** | | | | | 611,605,797 | | 611,605,797 |
| 468 | | | | | | | | |
| 469 | | | | | | | | |

| | A | B | C | D | E | Y | Z | AA |
|---|---|---|---|---|---|---|---|---|
| 1 | **Public Service Company of New Mexico** | | | | | | | |
| 2 | **Schedule C-1 a** | | | | | | | |
| 3 | **Accumulated Provision for Depreciation and Amortization by Functional Classification** | | | | | | | |
| 4 | **Base Period Ending 6/30/2026** | | | | | | | |
| 5 | **Test Period Ending 9/30/2028** | | | | | | | |
| 6 | Link to WP Plant Lead Sheet | | | | | | | |
| 7 | Base Period data is historical Information from the Company's Books and Records. | | | | | | | |
| 8 | **This schedule is sponsored by PNM Witness Gutierrez** | | | | | | | |
| 9 | Please see the Direct Testimony of PNM Witness Gutierrez for discussion of adjustments/changes to the Base Period, Test Period, and Linkage Data. | | | | | | | |
| 10 | **Description** | **Location Number Note 6** | **FERC** | **Loc/FERC** | **FERC Description** | **Adjusted Base Period Ending Balance 6/30/26 Column R + Column X** | **Reference** | **Linkage Beginning Balance 7/1/26** |
| 470 | | | | | | | | |
| 471 | **Accumulated Reserve Distribution Plant** | | | | | | | |
| 665 | **All - Distribution** | | | | | | | |
| 666 | | | 360 | | Land and Land Rights | 255,704 | | 255,704 |
| 667 | | | 360.1 | | Land - Right of Way | 1,246,944 | | 1,246,944 |
| 668 | | | 361 | | Structures and Improvements | 12,389,077 | | 12,389,077 |
| 669 | | | 362 | | Station Equipment | 108,867,167 | | 108,867,167 |
| 670 | | | 363.01 | | Computer Hardware | 1,869,487 | | 1,869,487 |
| 671 | | | 363.02 | | Computer Software | 17,642,040 | | 17,642,040 |
| 672 | | | 363.03 | | Communication Equipment | 7,058,066 | | 7,058,066 |
| 673 | | | 364 | | Poles, Towers and Fixtures | 98,276,569 | | 98,276,569 |
| 674 | | | 365 | | Overhead Conductors and Devices | 114,636,161 | | 114,636,161 |
| 675 | | | 366 | | Underground Conduit | 74,984,873 | | 74,984,873 |
| 676 | | | 367 | | Underground Conductors and Devices | 148,041,155 | | 148,041,155 |
| 677 | | | 368 | | Line Transformers | 126,093,791 | | 126,093,791 |
| 678 | | | 369 | | Services | 53,233,025 | | 53,233,025 |
| 679 | | | 369.1 | | Services - Underground | 85,529,798 | | 85,529,798 |
| 680 | | | 370 | | Meters | 12,871,407 | | 12,871,407 |
| 681 | | | 370.4 | | Meters - Grid Mod | 2,633 | | 2,633 |
| 682 | | | 371 | | Installations on Customers' Premises | 8,621,527 | | 8,621,527 |
| 683 | | | 371.1 | | Leased Flood Lighting | 266,445 | | 266,445 |
| 684 | | | 373 | | Street Lighting and Signal Systems | 13,133,398 | | 13,133,398 |
| 685 | | | 374 | | Asset Retirement Costs - Distribution | - | | - |
| 686 | **Total Accumulated Reserve Distribution Plant** | | | | | 885,019,267 | | 885,019,267 |
| 687 | | | | | | | | |
| 688 | | | | | | | | |

| | A | B | C | D | E | Y | Z | AA |
|---|---|---|---|---|---|---|---|---|
| 1 | **Public Service Company of New Mexico** | | | | | | | |
| 2 | **Schedule C-1 a** | | | | | | | |
| 3 | **Accumulated Provision for Depreciation and Amortization by Functional Classification** | | | | | | | |
| 4 | **Base Period Ending 6/30/2026** | | | | | | | |
| 5 | **Test Period Ending 9/30/2028** | | | | | | | |
| 6 | Link to WP Plant Lead Sheet | | | | | | | |
| 7 | Base Period data is historical Information from the Company's Books and Records. | | | | | | | |
| 8 | **This schedule is sponsored by PNM Witness Gutierrez** | | | | | | | |
| 9 | Please see the Direct Testimony of PNM Witness Gutierrez for discussion of adjustments/changes to the Base Period, Test Period, and Linkage Data. | | | | | | | |
| 10 | **Description** | **Location Number Note 6** | **FERC** | **Loc/FERC** | **FERC Description** | **Adjusted Base Period Ending Balance 6/30/26 Column R + Column X** | **Reference** | **Linkage Beginning Balance 7/1/26** |
| 689 | **Gross Plant G&I Plant (303,389-399)** | | | | | | | |
| 719 | **Total General & Intangible Plant** | | | | | | | |
| 720 | | | 303 | | Miscellaneous Intangible Plant | - | | - |
| 721 | | | 389 | | Land and Land Rights | - | | - |
| 722 | | | 390 | | Structures and Improvements | 29,738,030 | | 29,738,030 |
| 723 | | | 390.1 | | Bulk Power Office Building Remodeling | 5,725,295 | | 5,725,295 |
| 724 | | | 390.2 | | Bulk Power Office Building | 5,846,125 | | 5,846,125 |
| 725 | | | 391 | | Office Furniture and Equipment | 2,732,785 | | 2,732,785 |
| 726 | | | 391.1 | | Office Furniture and Equipment - PC System | - | | - |
| 727 | | | 391.2 | | Office Furniture and Equipment - PC's | - | | - |
| 728 | | | 391.3 | | Computer Hardware | - | | - |
| 729 | | | 391.5 | | Computer Hardware - Solar | - | | - |
| 730 | | | 391.7 | | Computer Hardware | - | | - |
| 731 | | | 392 | | Transportation Equipment - Light | 2,089,362 | | 2,089,362 |
| 732 | | | 392.1 | | Transportation Equipment - Heavy | 3,514,980 | | 3,514,980 |
| 733 | | | 392.2 | | Transportation Equipment - Trailers | 3,447,815 | | 3,447,815 |
| 734 | | | 392.4 | | Transportation Equipment - Leaseback | - | | - |
| 735 | | | 393 | | Stores Equipment | 81,800 | | 81,800 |
| 736 | | | 394 | | Tools, Shop & Garage Equipment | 8,908,131 | | 8,908,131 |
| 737 | | | 395 | | Laboratory Equipment | 120,491 | | 120,491 |
| 738 | | | 396 | | Power Operated Equipment | 4,109,707 | | 4,109,707 |
| 739 | | | 397.01 | | Computer Hardware | 1,651,220 | | 1,651,220 |
| 740 | | | 397.02 | | Computer Software | 21,021,031 | | 21,021,031 |
| 741 | | | 397.03 | | Communication Equipment | - | | - |
| 742 | | | 398 | | Miscellaneous Equipment | 1,162,240 | | 1,162,240 |
| 743 | | | 399.1 | | ARO General Plant-1 | 16,500 | | 16,500 |
| 744 | **Total Accumulated Reserve G&I Plant - PNM** | | | | | 90,165,511 | | 90,165,511 |
| 745 | | | | | | | | |
| 746 | **Total Electric Plant In Service** | | 101/106 | | | 2,523,175,699 | | 2,523,175,699 |
| 747 | | | | | | | | |
| 748 | **Electric Plant Purchased** | | 102 | | | | | |
| 749 | | | | | | | | |
| 750 | **Electric Plant Acquisition Adjustment** | | | | Acq. Adj. - Palo Verde Unit 1&2 (Drexel) | - | | - |
| 751 | | | | | Acq. Adj. - Palo Verde Unit 2 (First Chicago) | - | | - |
| 752 | | | | | Acq. Adj. - (EIP) | - | | - |
| 753 | **Electric Plant Acquisition Adjustment** | | 114 | | | - | | - |
| 754 | | | | | | | | |
| 755 | **Total Electric Plant** | | | | | 2,523,175,699 | | 2,523,175,699 |
| 756 | | | | | | | | |

| | A | B | C | D | E | Y | Z | AA |
|---|---|---|---|---|---|---|---|---|
| 1 | **Public Service Company of New Mexico** | | | | | | | |
| 2 | **Schedule C-1 a** | | | | | | | |
| 3 | **Accumulated Provision for Depreciation and Amortization by Functional Classification** | | | | | | | |
| 4 | **Base Period Ending 6/30/2026** | | | | | | | |
| 5 | **Test Period Ending 9/30/2028** | | | | | | | |
| 6 | Link to WP Plant Lead Sheet | | | | | | | |
| 7 | Base Period data is historical Information from the Company's Books and Records. | | | | | | | |
| 8 | **This schedule is sponsored by PNM Witness Gutierrez** | | | | | | | |
| 9 | Please see the Direct Testimony of PNM Witness Gutierrez for discussion of adjustments/changes to the Base Period, Test Period, and Linkage Data. | | | | | | | |
| 10 | **Description** | **Location Number Note 6** | **FERC** | **Loc/FERC** | **FERC Description** | **Adjusted Base Period Ending Balance 6/30/26 Column R + Column X** | **Reference** | **Linkage Beginning Balance 7/1/26** |
| 757 | | | | | | | | |
| 758 | **Corporate Unallocated** | 900 | 303 | 900303 | Miscellaneous Intangible Plant | - | | - |
| 759 | | 900 | 389 | 900389 | Land and Land Rights | (46,565) | | (66,097) |
| 760 | | 900 | 390 | 900390 | Structures and Improvements | 16,649,037 | | 23,342,198 |
| 761 | | 900 | 390.1 | 900390.1 | Bulk Power Office Building Remodeling | - | | - |
| 762 | | 900 | 390.2 | 900390.2 | Bulk Power Office Building | - | | - |
| 763 | | 900 | 391 | 900391 | Office Furniture and Equipment | 212,982 | | 319,037 |
| 764 | | 900 | 391.1 | 900391.1 | Office Furniture and Equipment - PC System | - | | - |
| 765 | | 900 | 391.2 | 900391.2 | Office Furniture and Equipment - PC's | - | | - |
| 766 | | 900 | 391.3 | 900391.3 | Computer Hardware | - | | - |
| 767 | | 900 | 391.5 | 900391.5 | Computer Hardware - Solar | - | | - |
| 768 | | 900 | 391.7 | 900391.7 | Computer Hardware | - | | - |
| 769 | | 900 | 392 | 900392 | Transportation Equipment - Light | 92,244 | | 142,111 |
| 770 | | 900 | 392.1 | 900392.1 | Transportation Equipment - Heavy | 9,988 | | 14,177 |
| 771 | | 900 | 392.2 | 900392.2 | Transportation Equipment - Trailers | 4,490 | | 6,918 |
| 772 | | 900 | 392.4 | 900392.4 | Transportation Equipment - Leaseback | - | | - |
| 773 | | 900 | 393 | 900393 | Stores Equipment | - | | - |
| 774 | | 900 | 394 | 900394 | Tools, Shop & Garage Equipment | 201,415 | | 306,743 |
| 775 | | 900 | 395 | 900395 | Laboratory Equipment | - | | - |
| 776 | | 900 | 396 | 900396 | Power Operated Equipment | 14,970 | | 21,249 |
| 777 | | 900 | 397 | 900397 | Communication Equipment | - | | - |
| 778 | | 900 | 397.01 | 900397.01 | Computer Hardware | 13,057,651 | | 18,728,521 |
| 779 | | 900 | 397.02 | 900397.02 | Computer Software | 80,137,960 | | 116,565,242 |
| 780 | | 900 | 397.03 | 900397.03 | Communication Equipment | 2,301,468 | | 3,545,630 |
| 781 | | 900 | 397.2 | 900397.2 | Communication Equipment | - | | - |
| 782 | | 900 | 397.3 | 900397.3 | Communication Equipment | - | | - |
| 783 | | 900 | 398 | 900398 | Miscellaneous Equipment | - | | - |
| 784 | | 900 | 399.1 | 900399.1 | ARO General Plant-1 | - | | - |
| 785 | | | | | | | | |
| 786 | **Total Accumulated Reserve Corporate Plant** | | | | | 112,635,641 | | 162,925,729 |
| 787 | | | | | | | | |
| 788 | **Total Electric Plant In Service - with Corporate** | | 101/106 | | | 2,635,811,340 | | 2,686,101,428 |
| 790 | **Electric Plant Purchased - with Corporate** | | 102 | | | | | - |
| 792 | **Electric Plant Acq. Adj. - with Corporate** | | 114 | | | - | | - |
| 793 | | | | | | | | |
| 794 | **Total Electric Plant - with Corporate** | | | | | 2,635,811,340 | | 2,686,101,428 |

| | A | B | C | D | E | AB | AC | AD | AE |
|---|---|---|---|---|---|---|---|---|---|
| 1 | **Public Service Company of New Mexico** | | | | | | | | |
| 2 | **Schedule C-1 a** | | | | | | | | |
| 3 | **Accumulated Provision for Depreciation and Amortization by Functional Classification** | | | | | | | | |
| 4 | **Base Period Ending 6/30/2026** | | | | | | | | |
| 5 | **Test Period Ending 9/30/2028** | | | | | | | | |
| 6 | Link to WP Plant Lead Sheet | | | | | | | | |
| 7 | Base Period data is historical Information from the Company's Books and Records. | | | | | | | | |
| 8 | **This schedule is sponsored by PNM Witness Gutierrez** | | | | | | | | |
| 9 | Please see the Direct Testimony of PNM Witness Gutierrez for discussion of adjustments/changes to the Base Period, Test Period, and Linkage Data. | | | | | | | | |
| 10 | **Description** | **Location Number Note 6** | **FERC** | **Loc/FERC** | **FERC Description** | **Balance 8/1/26** | **Balance 9/1/26** | **Balance 10/1/26** | **Balance 11/1/26** |
| 11 | | | | | | | | | |
| 12 | **Accumulated Depreciation Production Plant** | | | | | | | | |
| 13 | **Steam Production** | | | | | | | | |
| 56 | **All - Steam** | | | | | | | | |
| 57 | | | 310 | | Land and Land Rights | - | - | - | - |
| 58 | | | 310.1 | | Land Right of Way | 18,292 | 18,323 | 18,354 | 18,384 |
| 59 | | | 311 | | Structures & Improvements | 7,743,927 | 7,763,753 | 7,783,560 | 7,802,844 |
| 60 | | | 312 | | Boiler Plant Equipment | 93,147,805 | 93,262,853 | 93,377,307 | 93,491,011 |
| 61 | | | 314 | | Turbogenerator Units | 37,215,169 | 37,397,031 | 37,578,825 | 37,760,442 |
| 62 | | | 315 | | Accessory Electric Equipment | 10,204,044 | 10,249,192 | 10,294,319 | 10,339,424 |
| 63 | | | 315.01 | | Computer Hardware | - | - | - | - |
| 64 | | | 315.02 | | Computer Software | 627,272 | 645,447 | 663,622 | 681,797 |
| 65 | | | 315.03 | | Communication Equipment | 194,599 | 196,455 | 198,311 | 200,166 |
| 66 | | | 316 | | Misc Power Plant Equipment | 5,711,886 | 5,746,927 | 5,781,893 | 5,816,785 |
| 67 | | | 317 | | Asset Retirement Costs - Steam | 3,769,183 | 3,759,693 | 3,750,203 | 3,740,713 |
| 68 | **Total Steam Production Accumulated Reserve** | | | | | 158,632,178 | 159,039,674 | 159,446,393 | 159,851,566 |
| 69 | | | | | | | | | |
| 70 | | | | | | | | | |
| 71 | **Nuclear Production** | | | | | | | | |
| 129 | **All - Nuclear** | | | | | | | | |
| 130 | | | 320 | | Land and Land Rights | 0 | 0 | 0 | 0 |
| 131 | | | 320.1 | | Land - Right of Way | 29,989 | 30,044 | 30,100 | 30,156 |
| 132 | | | 321 | | Structures and Improvements | 111,612,063 | 112,031,890 | 112,453,415 | 112,861,358 |
| 133 | | | 322 | | Reactor Plant Equipment | 174,994,579 | 175,712,409 | 176,438,099 | 177,102,874 |
| 134 | | | 323 | | Turbogenerator Units | 60,991,654 | 61,241,463 | 61,491,163 | 61,740,757 |
| 135 | | | 324 | | Accessory Electric Equipment | 43,270,304 | 43,373,514 | 43,476,705 | 43,579,877 |
| 136 | | | 324.01 | | Computer Hardware | - | - | - | - |
| 137 | | | 324.02 | | Computer Software | 3,646,230 | 3,818,294 | 3,991,603 | 4,160,815 |
| 138 | | | 324.03 | | Communication Equipment | 196,019 | 198,148 | 200,429 | 201,764 |
| 139 | | | 325 | | Misc Power Plant Equipment | 38,299,469 | 38,464,621 | 38,631,777 | 38,783,472 |
| 140 | | | 326 | | Asset Retirement Costs Nuclear Prod Plant | 11,185 | 22,370 | 33,555 | 44,740 |
| 141 | **Total Nuclear Production Accumulated Reserve** | | | | | 433,051,493 | 434,892,753 | 436,746,846 | 438,505,813 |
| 142 | | | | | | | | | |
| 143 | | | | | | | | | |

| | A | B | C | D | E | AB | AC | AD | AE |
|---|---|---|---|---|---|---|---|---|---|
| 1 | **Public Service Company of New Mexico** | | | | | | | | |
| 2 | **Schedule C-1 a** | | | | | | | | |
| 3 | **Accumulated Provision for Depreciation and Amortization by Functional Classification** | | | | | | | | |
| 4 | **Base Period Ending 6/30/2026** | | | | | | | | |
| 5 | **Test Period Ending 9/30/2028** | | | | | | | | |
| 6 | Link to WP Plant Lead Sheet | | | | | | | | |
| 7 | Base Period data is historical Information from the Company's Books and Records. | | | | | | | | |
| 8 | **This schedule is sponsored by PNM Witness Gutierrez** | | | | | | | | |
| 9 | Please see the Direct Testimony of PNM Witness Gutierrez for discussion of adjustments/changes to the Base Period, Test Period, and Linkage Data. | | | | | | | | |
| 10 | **Description** | **Location Number Note 6** | **FERC** | **Loc/FERC** | **FERC Description** | **Balance 8/1/26** | **Balance 9/1/26** | **Balance 10/1/26** | **Balance 11/1/26** |
| 144 | **Solar Production** | | | | | | | | |
| 237 | **All - Solar** | | | | | | | | |
| 238 | | | 338.01 | | Land & Land Rights | - | - | - | - |
| 239 | | | 338.02 | | Structures and Improvements | 113,399 | 114,160 | 114,921 | 115,682 |
| 240 | | | 338.04 | | Solar Panels | 108,754,543 | 109,526,629 | 110,298,715 | 111,070,801 |
| 241 | | | 338.05 | | Collector System | 2,110,177 | 2,138,793 | 2,167,408 | 2,196,024 |
| 242 | | | 338.07 | | Solar Inverters | - | - | 21,840 | 43,680 |
| 243 | | | 338.08 | | Other Accessory Electrical Equipment | 11,970,299 | 12,065,426 | 12,131,953 | 12,198,480 |
| 244 | | | 338.09 | | Computer Hardware | 12,940 | 13,803 | 14,665 | 15,528 |
| 245 | | | 338.10 | | Computer Software | - | - | - | - |
| 246 | | | 338.11 | | Communication Equipment | 176,765 | 180,307 | 183,849 | 187,391 |
| 247 | | | 338.12 | | Misc. Power Plant Equipment | 1,869,631 | 1,883,518 | 1,897,404 | 1,911,290 |
| 248 | **Total Solar Production Accumulated Reserve** | | | | | 125,007,754 | 125,922,635 | 126,830,755 | 127,738,876 |
| 249 | | | | | | | | | |
| 250 | **Other Production** | | | | | | | | |
| 251 | | | | | | | | | |
| 252 | **Other Production - Gas:** | | | | | | | | |
| 339 | **All - Gas** | | 340 | | Land and Land Rights | - | - | - | - |
| 340 | | | 340.1 | | Land - Right of Way | 755,582 | 761,467 | 767,353 | 773,238 |
| 341 | | | 341 | | Structures and Improvements | 42,334,705 | 42,545,843 | 42,756,891 | 42,967,848 |
| 342 | | | 342 | | Fuel Holders, Producers, Accessories | 57,534,810 | 57,300,364 | 57,636,669 | 57,972,952 |
| 343 | | | 343 | | Prime Movers | - | - | - | - |
| 344 | | | 344 | | Generators | 95,620,685 | 96,277,884 | 96,934,870 | 97,591,645 |
| 345 | | | 345 | | Accessory Electric Equipment | 8,358,605 | 8,423,542 | 8,488,336 | 8,552,988 |
| 346 | | | 345.01 | | Computer Hardware | 39,519 | 40,417 | 41,315 | 42,213 |
| 347 | | | 345.02 | | Computer Software | 45,495 | 46,308 | 47,120 | 47,933 |
| 348 | | | 345.03 | | Communication Equipment | 5,556 | 5,772 | 5,988 | 6,204 |
| 349 | | | 346 | | Misc Power Plant Equipment | 10,703,361 | 10,798,454 | 10,897,932 | 11,009,126 |
| 350 | | | 347 | | Asset Retirement Costs - Other Production | 1,199,857 | 1,225,330 | 1,250,803 | 1,276,276 |
| 351 | **Total Other Production Plant - Gas** | | | | | 216,598,176 | 217,425,380 | 218,827,276 | 220,240,423 |
| 352 | | | | | | | | | |
| 353 | | | | | | | | | |
| 354 | **Total Other Production Accumulated Reserve** | | | | | 216,598,176 | 217,425,380 | 218,827,276 | 220,240,423 |

| | A | B | C | D | E | AB | AC | AD | AE |
|---|---|---|---|---|---|---|---|---|---|
| 1 | **Public Service Company of New Mexico** | | | | | | | | |
| 2 | **Schedule C-1 a** | | | | | | | | |
| 3 | **Accumulated Provision for Depreciation and Amortization by Functional Classification** | | | | | | | | |
| 4 | **Base Period Ending 6/30/2026** | | | | | | | | |
| 5 | **Test Period Ending 9/30/2028** | | | | | | | | |
| 6 | Link to WP Plant Lead Sheet | | | | | | | | |
| 7 | Base Period data is historical Information from the Company's Books and Records. | | | | | | | | |
| 8 | **This schedule is sponsored by PNM Witness Gutierrez** | | | | | | | | |
| 9 | Please see the Direct Testimony of PNM Witness Gutierrez for discussion of adjustments/changes to the Base Period, Test Period, and Linkage Data. | | | | | | | | |
| 10 | **Description** | **Location Number Note 6** | **FERC** | **Loc/FERC** | **FERC Description** | **Balance 8/1/26** | **Balance 9/1/26** | **Balance 10/1/26** | **Balance 11/1/26** |
| 355 | | | | | | | | | |
| 356 | **Total Accumulated Reserve Production** | | | | | 933,289,600 | 937,280,442 | 941,851,271 | 946,336,678 |
| 357 | | | | | | | | | |
| 358 | | | | | | | | | |
| 359 | **Accumulated Energy Storage Plant** | | | | | | | | |
| 386 | **All - Energy Storage** | | 387.01 | 387.01 | Land & Land Rights | - | - | - | - |
| 387 | | | 387.02 | 387.02 | Structures & Improvements | 85,657 | 145,464 | 205,272 | 265,080 |
| 388 | | | 387.03 | 387.03 | Energy Storage Equipment | 4,369,017 | 4,454,326 | 4,539,635 | 4,650,903 |
| 389 | | | 387.05 | 387.05 | Collector System | 253,356 | 319,478 | 385,601 | 451,724 |
| 390 | | | 387.06 | 387.06 | Generator Step-Up Transformers (GSU) | 219,082 | 371,721 | 524,361 | 677,001 |
| 391 | | | 387.07 | 387.07 | Inverters | - | - | - | - |
| 392 | | | 387.08 | 387.08 | Computer Hardware | 89,136 | 178,271 | 267,407 | 356,543 |
| 393 | | | 387.09 | 387.09 | Computer Software | 260,873 | 273,742 | 286,611 | 299,479 |
| 394 | | | 387.10 | 387.10 | Communication Equipment | 24,302 | 27,485 | 30,668 | 33,851 |
| 395 | | | 387.11 | 387.11 | Misc. Energy Storage Equipment | 1,798,133 | 1,818,357 | 1,838,581 | 1,858,805 |
| 396 | | | 387.12 | 387.12 | Asset Retirement Costs for Energy Storage | - | - | - | - |
| 397 | **Total Energy Storage Plant** | | | | | 7,099,555 | 7,588,846 | 8,078,137 | 8,593,387 |
| 398 | | | | | | | | | |
| 399 | | | | | | | | | |
| 400 | **Accumulated Reserve Transmission Plant** | | | | | | | | |
| 453 | **All - Transmission** | | | | | | | | |
| 454 | | | 350 | | Land and Land Rights | 6,209,682 | 6,209,206 | 6,208,777 | 6,208,777 |
| 455 | | | 350.1 | | Land - Right of Way | 25,914,428 | 25,957,146 | 25,999,864 | 26,042,583 |
| 456 | | | 351.01 | | Computer Hardware | 4,812,416 | 5,104,792 | 5,398,239 | 5,693,047 |
| 457 | | | 351.02 | | Computer Software | 4,797,274 | 4,919,571 | 5,041,869 | 5,164,166 |
| 458 | | | 351.03 | | Communication Equipment | 16,545,029 | 16,809,007 | 17,072,938 | 17,338,640 |
| 459 | | | 352 | | Structures and Improvements | 25,274,841 | 25,638,783 | 25,999,254 | 26,365,587 |
| 460 | | | 353 | | Station Equipment | 233,288,850 | 235,261,839 | 237,244,417 | 239,241,103 |
| 461 | | | 353.1 | | Station Equipment - Step-up Xfmr and Aux | 6,680,696 | 6,705,233 | 6,729,762 | 6,754,281 |
| 462 | | | 354 | | Towers and Fixtures | 48,117,751 | 48,159,358 | 48,200,940 | 48,241,702 |
| 463 | | | 355 | | Poles and Fixtures | 139,459,866 | 140,909,961 | 142,357,713 | 143,807,782 |
| 464 | | | 356 | | Overhead Conductors and Devices | 102,159,474 | 102,615,891 | 103,071,904 | 103,528,616 |
| 465 | | | 357 | | Underground Conduit | 6,168 | 6,462 | 6,756 | 7,050 |
| 466 | | | 359 | | Roads and Trails | 3,083,138 | 3,095,018 | 3,106,897 | 3,118,776 |
| 467 | **Total Accumulated Reserve Transmission Plant** | | | | | 616,349,613 | 621,392,269 | 626,439,330 | 631,512,109 |
| 468 | | | | | | | | | |
| 469 | | | | | | | | | |

| | A | B | C | D | E | AB | AC | AD | AE |
|---|---|---|---|---|---|---|---|---|---|
| 1 | **Public Service Company of New Mexico** | | | | | | | | |
| 2 | **Schedule C-1 a** | | | | | | | | |
| 3 | **Accumulated Provision for Depreciation and Amortization by Functional Classification** | | | | | | | | |
| 4 | **Base Period Ending 6/30/2026** | | | | | | | | |
| 5 | **Test Period Ending 9/30/2028** | | | | | | | | |
| 6 | Link to WP Plant Lead Sheet | | | | | | | | |
| 7 | Base Period data is historical Information from the Company's Books and Records. | | | | | | | | |
| 8 | **This schedule is sponsored by PNM Witness Gutierrez** | | | | | | | | |
| 9 | Please see the Direct Testimony of PNM Witness Gutierrez for discussion of adjustments/changes to the Base Period, Test Period, and Linkage Data. | | | | | | | | |
| 10 | **Description** | **Location Number Note 6** | **FERC** | **Loc/FERC** | **FERC Description** | **Balance 8/1/26** | **Balance 9/1/26** | **Balance 10/1/26** | **Balance 11/1/26** |
| 470 | | | | | | | | | |
| 471 | **Accumulated Reserve Distribution Plant** | | | | | | | | |
| 665 | **All - Distribution** | | | | | | | | |
| 666 | | | 360 | | Land and Land Rights | 253,007 | 253,090 | 253,090 | 251,285 |
| 667 | | | 360.1 | | Land - Right of Way | 1,237,408 | 1,238,631 | 1,235,673 | 1,214,040 |
| 668 | | | 361 | | Structures and Improvements | 12,475,878 | 12,565,964 | 12,644,624 | 12,709,434 |
| 669 | | | 362 | | Station Equipment | 109,311,080 | 109,395,241 | 109,773,898 | 109,976,026 |
| 670 | | | 363.01 | | Computer Hardware | 1,997,322 | 2,121,875 | 2,254,104 | 2,354,488 |
| 671 | | | 363.02 | | Computer Software | 18,220,864 | 18,783,967 | 19,354,652 | 19,825,029 |
| 672 | | | 363.03 | | Communication Equipment | 7,094,961 | 7,185,441 | 7,133,379 | 7,109,076 |
| 673 | | | 364 | | Poles, Towers and Fixtures | 98,548,180 | 99,298,692 | 100,080,025 | 100,753,881 |
| 674 | | | 365 | | Overhead Conductors and Devices | 114,407,470 | 114,987,065 | 115,478,594 | 115,891,988 |
| 675 | | | 366 | | Underground Conduit | 74,842,307 | 74,975,904 | 75,108,396 | 75,282,189 |
| 676 | | | 367 | | Underground Conductors and Devices | 148,193,570 | 148,186,283 | 148,242,949 | 148,729,072 |
| 677 | | | 368 | | Line Transformers | 126,539,399 | 126,975,758 | 127,408,298 | 127,832,716 |
| 678 | | | 369 | | Services | 53,161,527 | 53,397,632 | 53,633,657 | 53,750,801 |
| 679 | | | 369.1 | | Services - Underground | 84,993,987 | 85,432,111 | 85,870,194 | 85,932,031 |
| 680 | | | 370 | | Meters | 13,054,037 | 13,228,595 | 13,402,294 | 13,548,136 |
| 681 | | | 370.4 | | Meters - Grid Mod | 2,544 | (18,636) | (42,902) | (272,557) |
| 682 | | | 371 | | Installations on Customers' Premises | 8,636,664 | 8,651,802 | 8,666,939 | 8,682,077 |
| 683 | | | 371.1 | | Leased Flood Lighting | 267,066 | 267,686 | 268,306 | 268,926 |
| 684 | | | 373 | | Street Lighting and Signal Systems | 13,122,562 | 13,125,091 | 13,137,656 | 13,150,841 |
| 685 | | | 374 | | Asset Retirement Costs - Distribution | - | - | - | - |
| 686 | **Total Accumulated Reserve Distribution Plant** | | | | | 886,359,830 | 890,052,192 | 893,903,827 | 896,989,480 |
| 687 | | | | | | | | | |
| 688 | | | | | | | | | |

| | A | B | C | D | E | AB | AC | AD | AE |
|---|---|---|---|---|---|---|---|---|---|
| 1 | **Public Service Company of New Mexico** | | | | | | | | |
| 2 | **Schedule C-1 a** | | | | | | | | |
| 3 | **Accumulated Provision for Depreciation and Amortization by Functional Classification** | | | | | | | | |
| 4 | **Base Period Ending 6/30/2026** | | | | | | | | |
| 5 | **Test Period Ending 9/30/2028** | | | | | | | | |
| 6 | Link to WP Plant Lead Sheet | | | | | | | | |
| 7 | Base Period data is historical Information from the Company's Books and Records. | | | | | | | | |
| 8 | **This schedule is sponsored by PNM Witness Gutierrez** | | | | | | | | |
| 9 | Please see the Direct Testimony of PNM Witness Gutierrez for discussion of adjustments/changes to the Base Period, Test Period, and Linkage Data. | | | | | | | | |
| 10 | **Description** | **Location Number Note 6** | **FERC** | **Loc/FERC** | **FERC Description** | **Balance 8/1/26** | **Balance 9/1/26** | **Balance 10/1/26** | **Balance 11/1/26** |
| 689 | **Gross Plant G&I Plant (303,389-399)** | | | | | | | | |
| 719 | **Total General & Intangible Plant** | | | | | | | | |
| 720 | | | 303 | | Miscellaneous Intangible Plant | - | - | - | - |
| 721 | | | 389 | | Land and Land Rights | - | - | - | - |
| 722 | | | 390 | | Structures and Improvements | 29,818,000 | 29,899,237 | 29,983,075 | 30,066,897 |
| 723 | | | 390.1 | | Bulk Power Office Building Remodeling | 5,724,078 | 5,722,861 | 5,721,643 | 5,720,426 |
| 724 | | | 390.2 | | Bulk Power Office Building | 5,846,125 | 5,846,125 | 5,846,125 | 5,846,125 |
| 725 | | | 391 | | Office Furniture and Equipment | 2,753,386 | 2,774,014 | 2,794,478 | 2,815,101 |
| 726 | | | 391.1 | | Office Furniture and Equipment - PC System | - | - | - | - |
| 727 | | | 391.2 | | Office Furniture and Equipment - PC's | - | - | - | - |
| 728 | | | 391.3 | | Computer Hardware | - | - | - | - |
| 729 | | | 391.5 | | Computer Hardware - Solar | - | - | - | - |
| 730 | | | 391.7 | | Computer Hardware | - | - | - | - |
| 731 | | | 392 | | Transportation Equipment - Light | 2,102,812 | 2,118,490 | 2,134,333 | 2,150,528 |
| 732 | | | 392.1 | | Transportation Equipment - Heavy | 3,513,759 | 3,512,450 | 3,511,055 | 3,509,572 |
| 733 | | | 392.2 | | Transportation Equipment - Trailers | 3,471,229 | 3,494,642 | 3,518,054 | 3,541,466 |
| 734 | | | 392.4 | | Transportation Equipment - Leaseback | - | - | - | - |
| 735 | | | 393 | | Stores Equipment | 82,344 | 82,888 | 83,432 | 83,976 |
| 736 | | | 394 | | Tools, Shop & Garage Equipment | 8,990,901 | 9,074,643 | 9,151,932 | 9,235,007 |
| 737 | | | 395 | | Laboratory Equipment | 122,209 | 123,928 | 125,647 | 127,366 |
| 738 | | | 396 | | Power Operated Equipment | 4,126,428 | 4,143,157 | 4,159,539 | 4,176,172 |
| 739 | | | 397.01 | | Computer Hardware | 1,690,994 | 1,730,768 | 1,770,541 | 1,810,377 |
| 740 | | | 397.02 | | Computer Software | 21,313,182 | 21,605,334 | 21,901,550 | 22,197,767 |
| 741 | | | 397.03 | | Communication Equipment | - | - | - | - |
| 742 | | | 398 | | Miscellaneous Equipment | 1,171,994 | 1,181,883 | 1,191,773 | 1,201,662 |
| 743 | | | 399.1 | | ARO General Plant-1 | 16,526 | 16,553 | 16,579 | 16,605 |
| 744 | **Total Accumulated Reserve G&I Plant - PNM** | | | | | 90,743,968 | 91,326,973 | 91,909,758 | 92,499,048 |
| 745 | | | | | | | | | |
| 746 | **Total Electric Plant In Service** | | 101/106 | | | 2,533,842,567 | 2,547,640,722 | 2,562,182,323 | 2,575,930,701 |
| 747 | | | | | | | | | |
| 748 | **Electric Plant Purchased** | | 102 | | | | | | |
| 749 | | | | | | | | | |
| 750 | **Electric Plant Acquisition Adjustment** | | | | Acq. Adj. - Palo Verde Unit 1&2 (Drexel) | - | - | - | - |
| 751 | | | | | Acq. Adj. - Palo Verde Unit 2 (First Chicago) | - | - | - | - |
| 752 | | | | | Acq. Adj. - (EIP) | - | - | - | - |
| 753 | **Electric Plant Acquisition Adjustment** | | 114 | | | - | - | - | - |
| 754 | | | | | | | | | |
| 755 | **Total Electric Plant** | | | | | 2,533,842,567 | 2,547,640,722 | 2,562,182,323 | 2,575,930,701 |
| 756 | | | | | | | | | |

| | A | B | C | D | E | AB | AC | AD | AE |
|---|---|---|---|---|---|---|---|---|---|
| 1 | **Public Service Company of New Mexico** | | | | | | | | |
| 2 | **Schedule C-1 a** | | | | | | | | |
| 3 | **Accumulated Provision for Depreciation and Amortization by Functional Classification** | | | | | | | | |
| 4 | **Base Period Ending 6/30/2026** | | | | | | | | |
| 5 | **Test Period Ending 9/30/2028** | | | | | | | | |
| 6 | Link to WP Plant Lead Sheet | | | | | | | | |
| 7 | Base Period data is historical Information from the Company's Books and Records. | | | | | | | | |
| 8 | **This schedule is sponsored by PNM Witness Gutierrez** | | | | | | | | |
| 9 | Please see the Direct Testimony of PNM Witness Gutierrez for discussion of adjustments/changes to the Base Period, Test Period, and Linkage Data. | | | | | | | | |
| 10 | **Description** | **Location Number Note 6** | **FERC** | **Loc/FERC** | **FERC Description** | **Balance 8/1/26** | **Balance 9/1/26** | **Balance 10/1/26** | **Balance 11/1/26** |
| 757 | | | | | | | | | |
| 758 | **Corporate Unallocated** | 900 | 303 | 900303 | Miscellaneous Intangible Plant | - | - | - | - |
| 759 | | 900 | 389 | 900389 | Land and Land Rights | (66,097) | (66,097) | (66,097) | (66,097) |
| 760 | | 900 | 390 | 900390 | Structures and Improvements | 23,053,283 | 23,122,178 | 23,192,007 | 23,261,765 |
| 761 | | 900 | 390.1 | 900390.1 | Bulk Power Office Building Remodeling | - | - | - | - |
| 762 | | 900 | 390.2 | 900390.2 | Bulk Power Office Building | - | - | - | - |
| 763 | | 900 | 391 | 900391 | Office Furniture and Equipment | 315,848 | 320,268 | 324,747 | 329,409 |
| 764 | | 900 | 391.1 | 900391.1 | Office Furniture and Equipment - PC System | - | - | - | - |
| 765 | | 900 | 391.2 | 900391.2 | Office Furniture and Equipment - PC's | - | - | - | - |
| 766 | | 900 | 391.3 | 900391.3 | Computer Hardware | - | - | - | - |
| 767 | | 900 | 391.5 | 900391.5 | Computer Hardware - Solar | - | - | - | - |
| 768 | | 900 | 391.7 | 900391.7 | Computer Hardware | - | - | - | - |
| 769 | | 900 | 392 | 900392 | Transportation Equipment - Light | 143,611 | 145,110 | 146,609 | 148,108 |
| 770 | | 900 | 392.1 | 900392.1 | Transportation Equipment - Heavy | 14,389 | 14,600 | 14,812 | 15,023 |
| 771 | | 900 | 392.2 | 900392.2 | Transportation Equipment - Trailers | 6,947 | 6,975 | 7,004 | 7,032 |
| 772 | | 900 | 392.4 | 900392.4 | Transportation Equipment - Leaseback | (12) | (24) | (36) | (48) |
| 773 | | 900 | 393 | 900393 | Stores Equipment | - | - | - | - |
| 774 | | 900 | 394 | 900394 | Tools, Shop & Garage Equipment | 309,211 | 311,678 | 314,146 | 316,614 |
| 775 | | 900 | 395 | 900395 | Laboratory Equipment | - | - | - | - |
| 776 | | 900 | 396 | 900396 | Power Operated Equipment | 21,309 | 21,369 | 21,429 | 21,489 |
| 777 | | 900 | 397 | 900397 | Communication Equipment | - | - | - | - |
| 778 | | 900 | 397.01 | 900397.01 | Computer Hardware | 19,358,888 | 20,004,723 | 20,651,047 | 21,311,306 |
| 779 | | 900 | 397.02 | 900397.02 | Computer Software | 118,976,423 | 121,388,728 | 123,815,555 | 126,258,454 |
| 780 | | 900 | 397.03 | 900397.03 | Communication Equipment | 3,630,589 | 3,715,549 | 3,800,508 | 3,885,468 |
| 781 | | 900 | 397.2 | 900397.2 | Communication Equipment | - | - | - | - |
| 782 | | 900 | 397.3 | 900397.3 | Communication Equipment | - | - | - | - |
| 783 | | 900 | 398 | 900398 | Miscellaneous Equipment | - | - | - | - |
| 784 | | 900 | 399.1 | 900399.1 | ARO General Plant-1 | - | - | - | - |
| 785 | | | | | | | | | |
| 786 | **Total Accumulated Reserve Corporate Plant** | | | | | 165,764,387 | 168,985,057 | 172,221,731 | 175,488,524 |
| 787 | | | | | | | | | |
| 788 | **Total Electric Plant In Service - with Corporate** | | 101/106 | | | 2,699,606,954 | 2,716,625,778 | 2,734,404,054 | 2,751,419,224 |
| 790 | **Electric Plant Purchased - with Corporate** | | 102 | | | - | - | - | - |
| 792 | **Electric Plant Acq. Adj. - with Corporate** | | 114 | | | - | - | - | - |
| 793 | | | | | | | | | |
| 794 | **Total Electric Plant - with Corporate** | | | | | 2,699,606,954 | 2,716,625,778 | 2,734,404,054 | 2,751,419,224 |

| | A | B | C | D | E | AF | AG | AH | AI |
|---|---|---|---|---|---|---|---|---|---|
| 1 | **Public Service Company of New Mexico** | | | | | | | | |
| 2 | **Schedule C-1 a** | | | | | | | | |
| 3 | **Accumulated Provision for Depreciation and Amortization by Functional Classification** | | | | | | | | |
| 4 | **Base Period Ending 6/30/2026** | | | | | | | | |
| 5 | **Test Period Ending 9/30/2028** | | | | | | | | |
| 6 | Link to WP Plant Lead Sheet | | | | | | | | |
| 7 | Base Period data is historical Information from the Company's Books and Records. | | | | | | | | |
| 8 | **This schedule is sponsored by PNM Witness Gutierrez** | | | | | | | | |
| 9 | Please see the Direct Testimony of PNM Witness Gutierrez for discussion of adjustments/changes to the Base Period, Test Period, and Linkage Data. | | | | | | | | |
| 10 | **Description** | **Location Number Note 6** | **FERC** | **Loc/FERC** | **FERC Description** | **Balance 12/1/26** | **Balance 1/1/27** | **Balance 2/1/27** | **Balance 3/1/27** |
| 11 | | | | | | | | | |
| 12 | **Accumulated Depreciation Production Plant** | | | | | | | | |
| 13 | **Steam Production** | | | | | | | | |
| 56 | **All - Steam** | | | | | | | | |
| 57 | | | 310 | | Land and Land Rights | - | - | - | - |
| 58 | | | 310.1 | | Land Right of Way | 18,415 | 18,445 | 18,476 | 18,506 |
| 59 | | | 311 | | Structures & Improvements | 7,821,228 | 7,809,969 | 7,831,870 | 7,853,639 |
| 60 | | | 312 | | Boiler Plant Equipment | 93,603,847 | 93,706,860 | 93,819,537 | 93,931,589 |
| 61 | | | 314 | | Turbogenerator Units | 37,941,802 | 38,116,785 | 38,298,908 | 38,480,932 |
| 62 | | | 315 | | Accessory Electric Equipment | 10,384,507 | 10,429,569 | 10,474,609 | 10,519,628 |
| 63 | | | 315.01 | | Computer Hardware | - | - | - | - |
| 64 | | | 315.02 | | Computer Software | 699,972 | 718,148 | 736,323 | 754,498 |
| 65 | | | 315.03 | | Communication Equipment | 202,022 | 203,878 | 205,734 | 207,590 |
| 66 | | | 316 | | Misc Power Plant Equipment | 5,851,602 | 5,886,343 | 5,921,010 | 5,955,603 |
| 67 | | | 317 | | Asset Retirement Costs - Steam | 3,731,223 | 3,721,733 | 3,712,243 | 3,702,752 |
| 68 | **Total Steam Production Accumulated Reserve** | | | | | 160,254,619 | 160,611,730 | 161,018,709 | 161,424,736 |
| 69 | | | | | | | | | |
| 70 | | | | | | | | | |
| 71 | **Nuclear Production** | | | | | | | | |
| 129 | **All - Nuclear** | | | | | | | | |
| 130 | | | 320 | | Land and Land Rights | 0 | 0 | 0 | 0 |
| 131 | | | 320.1 | | Land - Right of Way | 30,211 | 30,267 | 30,323 | 30,378 |
| 132 | | | 321 | | Structures and Improvements | 113,282,129 | 113,694,663 | 114,088,435 | 114,496,586 |
| 133 | | | 322 | | Reactor Plant Equipment | 177,825,596 | 178,511,313 | 179,112,941 | 179,779,646 |
| 134 | | | 323 | | Turbogenerator Units | 61,990,243 | 62,239,621 | 62,488,892 | 62,738,056 |
| 135 | | | 324 | | Accessory Electric Equipment | 43,683,032 | 43,786,168 | 43,889,285 | 43,992,384 |
| 136 | | | 324.01 | | Computer Hardware | - | - | - | - |
| 137 | | | 324.02 | | Computer Software | 4,335,543 | 4,507,913 | 4,671,741 | 4,842,302 |
| 138 | | | 324.03 | | Communication Equipment | 204,068 | 205,794 | 206,235 | 207,767 |
| 139 | | | 325 | | Misc Power Plant Equipment | 38,949,919 | 39,107,005 | 39,242,715 | 39,394,935 |
| 140 | | | 326 | | Asset Retirement Costs Nuclear Prod Plant | 55,924 | 67,109 | 78,294 | 89,479 |
| 141 | **Total Nuclear Production Accumulated Reserve** | | | | | 440,356,664 | 442,149,854 | 443,808,862 | 445,571,534 |
| 142 | | | | | | | | | |
| 143 | | | | | | | | | |

| | A | B | C | D | E | AF | AG | AH | AI |
|---|---|---|---|---|---|---|---|---|---|
| 1 | **Public Service Company of New Mexico** | | | | | | | | |
| 2 | **Schedule C-1 a** | | | | | | | | |
| 3 | **Accumulated Provision for Depreciation and Amortization by Functional Classification** | | | | | | | | |
| 4 | **Base Period Ending 6/30/2026** | | | | | | | | |
| 5 | **Test Period Ending 9/30/2028** | | | | | | | | |
| 6 | Link to WP Plant Lead Sheet | | | | | | | | |
| 7 | Base Period data is historical Information from the Company's Books and Records. | | | | | | | | |
| 8 | **This schedule is sponsored by PNM Witness Gutierrez** | | | | | | | | |
| 9 | Please see the Direct Testimony of PNM Witness Gutierrez for discussion of adjustments/changes to the Base Period, Test Period, and Linkage Data. | | | | | | | | |
| 10 | **Description** | **Location Number Note 6** | **FERC** | **Loc/FERC** | **FERC Description** | **Balance 12/1/26** | **Balance 1/1/27** | **Balance 2/1/27** | **Balance 3/1/27** |
| 144 | **Solar Production** | | | | | | | | |
| 237 | **All - Solar** | | | | | | | | |
| 238 | | | 338.01 | | Land & Land Rights | - | - | - | - |
| 239 | | | 338.02 | | Structures and Improvements | 116,443 | 117,204 | 117,966 | 118,727 |
| 240 | | | 338.04 | | Solar Panels | 111,842,887 | 112,614,972 | 113,387,058 | 114,159,144 |
| 241 | | | 338.05 | | Collector System | 2,224,639 | 2,253,255 | 2,281,870 | 2,310,486 |
| 242 | | | 338.07 | | Solar Inverters | 65,520 | 87,360 | 109,200 | 131,040 |
| 243 | | | 338.08 | | Other Accessory Electrical Equipment | 12,265,006 | 12,331,533 | 12,398,060 | 12,464,587 |
| 244 | | | 338.09 | | Computer Hardware | 16,391 | 17,253 | 18,116 | 18,979 |
| 245 | | | 338.10 | | Computer Software | - | - | - | - |
| 246 | | | 338.11 | | Communication Equipment | 190,933 | 194,475 | 198,017 | 201,559 |
| 247 | | | 338.12 | | Misc. Power Plant Equipment | 1,925,176 | 1,939,063 | 1,952,949 | 1,966,835 |
| 248 | **Total Solar Production Accumulated Reserve** | | | | | 128,646,996 | 129,555,116 | 130,463,236 | 131,371,356 |
| 249 | | | | | | | | | |
| 250 | **Other Production** | | | | | | | | |
| 251 | | | | | | | | | |
| 252 | **Other Production - Gas:** | | | | | | | | |
| 339 | **All - Gas** | | 340 | | Land and Land Rights | - | - | - | - |
| 340 | | | 340.1 | | Land - Right of Way | 779,124 | 785,009 | 790,895 | 796,780 |
| 341 | | | 341 | | Structures and Improvements | 43,169,255 | 43,368,940 | 43,580,403 | 43,791,776 |
| 342 | | | 342 | | Fuel Holders, Producers, Accessories | 58,298,176 | 58,316,715 | 58,658,080 | 58,547,718 |
| 343 | | | 343 | | Prime Movers | - | - | - | - |
| 344 | | | 344 | | Generators | 98,118,908 | 98,592,900 | 99,256,467 | 99,919,823 |
| 345 | | | 345 | | Accessory Electric Equipment | 8,609,613 | 8,668,437 | 8,744,779 | 8,820,979 |
| 346 | | | 345.01 | | Computer Hardware | 43,111 | 44,009 | 44,907 | 45,805 |
| 347 | | | 345.02 | | Computer Software | 48,745 | 49,557 | 50,370 | 51,182 |
| 348 | | | 345.03 | | Communication Equipment | 6,420 | 6,636 | 6,851 | 7,067 |
| 349 | | | 346 | | Misc Power Plant Equipment | 10,826,588 | 10,941,574 | 11,056,976 | 11,172,333 |
| 350 | | | 347 | | Asset Retirement Costs - Other Production | 1,301,748 | 1,327,221 | 1,352,694 | 1,378,167 |
| 351 | **Total Other Production Plant - Gas** | | | | | 221,201,689 | 222,100,999 | 223,542,424 | 224,531,631 |
| 352 | | | | | | | | | |
| 353 | | | | | | | | | |
| 354 | **Total Other Production Accumulated Reserve** | | | | | 221,201,689 | 222,100,999 | 223,542,424 | 224,531,631 |

| | A | B | C | D | E | AF | AG | AH | AI |
|---|---|---|---|---|---|---|---|---|---|
| 1 | **Public Service Company of New Mexico** | | | | | | | | |
| 2 | **Schedule C-1 a** | | | | | | | | |
| 3 | **Accumulated Provision for Depreciation and Amortization by Functional Classification** | | | | | | | | |
| 4 | **Base Period Ending 6/30/2026** | | | | | | | | |
| 5 | **Test Period Ending 9/30/2028** | | | | | | | | |
| 6 | Link to WP Plant Lead Sheet | | | | | | | | |
| 7 | Base Period data is historical Information from the Company's Books and Records. | | | | | | | | |
| 8 | **This schedule is sponsored by PNM Witness Gutierrez** | | | | | | | | |
| 9 | Please see the Direct Testimony of PNM Witness Gutierrez for discussion of adjustments/changes to the Base Period, Test Period, and Linkage Data. | | | | | | | | |
| 10 | **Description** | **Location Number Note 6** | **FERC** | **Loc/FERC** | **FERC Description** | **Balance 12/1/26** | **Balance 1/1/27** | **Balance 2/1/27** | **Balance 3/1/27** |
| 355 | | | | | | | | | |
| 356 | **Total Accumulated Reserve Production** | | | | | 950,459,968 | 954,417,699 | 958,833,231 | 962,899,258 |
| 357 | | | | | | | | | |
| 358 | | | | | | | | | |
| 359 | **Accumulated Energy Storage Plant** | | | | | | | | |
| 386 | **All - Energy Storage** | | 387.01 | 387.01 | Land & Land Rights | - | - | - | - |
| 387 | | | 387.02 | 387.02 | Structures & Improvements | 324,888 | 384,695 | 444,503 | 504,311 |
| 388 | | | 387.03 | 387.03 | Energy Storage Equipment | 4,762,172 | 4,873,440 | 4,984,708 | 5,095,976 |
| 389 | | | 387.05 | 387.05 | Collector System | 517,847 | 583,970 | 650,093 | 716,216 |
| 390 | | | 387.06 | 387.06 | Generator Step-Up Transformers (GSU) | 829,640 | 982,280 | 1,134,920 | 1,287,559 |
| 391 | | | 387.07 | 387.07 | Inverters | - | - | - | - |
| 392 | | | 387.08 | 387.08 | Computer Hardware | 445,678 | 534,814 | 623,950 | 713,085 |
| 393 | | | 387.09 | 387.09 | Computer Software | 312,348 | 325,216 | 338,085 | 350,954 |
| 394 | | | 387.10 | 387.10 | Communication Equipment | 37,034 | 40,217 | 43,400 | 46,583 |
| 395 | | | 387.11 | 387.11 | Misc. Energy Storage Equipment | 1,879,029 | 1,899,254 | 1,919,478 | 1,939,702 |
| 396 | | | 387.12 | 387.12 | Asset Retirement Costs for Energy Storage | - | - | - | - |
| 397 | **Total Energy Storage Plant** | | | | | 9,108,636 | 9,623,886 | 10,139,136 | 10,654,386 |
| 398 | | | | | | | | | |
| 399 | | | | | | | | | |
| 400 | **Accumulated Reserve Transmission Plant** | | | | | | | | |
| 453 | **All - Transmission** | | | | | | | | |
| 454 | | | 350 | | Land and Land Rights | 6,208,777 | 6,208,777 | 6,208,777 | 6,208,777 |
| 455 | | | 350.1 | | Land - Right of Way | 26,085,301 | 26,128,020 | 26,170,738 | 26,213,456 |
| 456 | | | 351.01 | | Computer Hardware | 5,989,728 | 4,626,744 | 4,900,380 | 5,184,689 |
| 457 | | | 351.02 | | Computer Software | 5,272,327 | 5,392,861 | 5,512,763 | 5,632,666 |
| 458 | | | 351.03 | | Communication Equipment | 17,607,017 | 17,815,680 | 18,081,044 | 18,361,047 |
| 459 | | | 352 | | Structures and Improvements | 26,741,339 | 26,758,898 | 27,097,412 | 27,486,396 |
| 460 | | | 353 | | Station Equipment | 241,262,957 | 242,767,443 | 244,775,404 | 246,766,772 |
| 461 | | | 353.1 | | Station Equipment - Step-up Xfmr and Aux | 6,778,791 | 6,803,292 | 6,827,785 | 6,852,268 |
| 462 | | | 354 | | Towers and Fixtures | 48,283,428 | 48,325,129 | 48,366,804 | 48,408,454 |
| 463 | | | 355 | | Poles and Fixtures | 145,261,095 | 146,552,128 | 148,002,556 | 149,465,647 |
| 464 | | | 356 | | Overhead Conductors and Devices | 103,986,462 | 104,286,505 | 104,745,239 | 105,209,331 |
| 465 | | | 357 | | Underground Conduit | 7,343 | 5,371 | 6,418 | 5,718 |
| 466 | | | 359 | | Roads and Trails | 3,130,655 | 3,142,534 | 3,154,413 | 3,166,291 |
| 467 | **Total Accumulated Reserve Transmission Plant** | | | | | 636,615,220 | 638,813,383 | 643,849,734 | 648,961,514 |
| 468 | | | | | | | | | |
| 469 | | | | | | | | | |

| | A | B | C | D | E | AF | AG | AH | AI |
|---|---|---|---|---|---|---|---|---|---|
| 1 | **Public Service Company of New Mexico** | | | | | | | | |
| 2 | **Schedule C-1 a** | | | | | | | | |
| 3 | **Accumulated Provision for Depreciation and Amortization by Functional Classification** | | | | | | | | |
| 4 | **Base Period Ending 6/30/2026** | | | | | | | | |
| 5 | **Test Period Ending 9/30/2028** | | | | | | | | |
| 6 | Link to WP Plant Lead Sheet | | | | | | | | |
| 7 | Base Period data is historical Information from the Company's Books and Records. | | | | | | | | |
| 8 | **This schedule is sponsored by PNM Witness Gutierrez** | | | | | | | | |
| 9 | Please see the Direct Testimony of PNM Witness Gutierrez for discussion of adjustments/changes to the Base Period, Test Period, and Linkage Data. | | | | | | | | |
| 10 | **Description** | **Location Number Note 6** | **FERC** | **Loc/FERC** | **FERC Description** | **Balance 12/1/26** | **Balance 1/1/27** | **Balance 2/1/27** | **Balance 3/1/27** |
| 470 | | | | | | | | | |
| 471 | **Accumulated Reserve Distribution Plant** | | | | | | | | |
| 665 | **All - Distribution** | | | | | | | | |
| 666 | | | 360 | | Land and Land Rights | 251,285 | 249,637 | 249,637 | 249,637 |
| 667 | | | 360.1 | | Land - Right of Way | 1,216,310 | 1,123,190 | 1,126,422 | 1,129,655 |
| 668 | | | 361 | | Structures and Improvements | 12,806,221 | 12,857,187 | 12,954,787 | 13,051,399 |
| 669 | | | 362 | | Station Equipment | 110,570,359 | 110,709,981 | 111,290,435 | 111,607,899 |
| 670 | | | 363.01 | | Computer Hardware | 2,498,641 | 2,562,329 | 2,768,452 | 2,989,569 |
| 671 | | | 363.02 | | Computer Software | 20,392,696 | 20,741,243 | 21,353,921 | 21,985,794 |
| 672 | | | 363.03 | | Communication Equipment | 7,232,869 | 7,340,301 | 7,245,486 | 7,367,188 |
| 673 | | | 364 | | Poles, Towers and Fixtures | 101,601,846 | 101,326,731 | 102,128,066 | 103,216,168 |
| 674 | | | 365 | | Overhead Conductors and Devices | 116,553,153 | 116,898,642 | 117,176,365 | 117,739,286 |
| 675 | | | 366 | | Underground Conduit | 75,468,468 | 75,380,067 | 75,458,777 | 75,433,276 |
| 676 | | | 367 | | Underground Conductors and Devices | 149,316,361 | 149,206,293 | 149,689,300 | 150,004,328 |
| 677 | | | 368 | | Line Transformers | 128,255,383 | 128,663,679 | 129,088,543 | 129,500,674 |
| 678 | | | 369 | | Services | 53,990,708 | 54,184,855 | 54,426,156 | 54,667,378 |
| 679 | | | 369.1 | | Services - Underground | 86,382,429 | 86,688,134 | 87,143,218 | 87,598,261 |
| 680 | | | 370 | | Meters | 13,516,684 | 13,663,750 | 13,788,258 | 13,913,728 |
| 681 | | | 370.4 | | Meters - Grid Mod | (316,855) | (845,901) | (957,181) | (1,019,050) |
| 682 | | | 371 | | Installations on Customers' Premises | 8,697,214 | 8,712,351 | 8,727,489 | 8,742,626 |
| 683 | | | 371.1 | | Leased Flood Lighting | 269,546 | 270,167 | 270,787 | 271,407 |
| 684 | | | 373 | | Street Lighting and Signal Systems | 13,166,420 | 13,172,159 | 13,199,290 | 13,185,672 |
| 685 | | | 374 | | Asset Retirement Costs - Distribution | - | - | - | - |
| 686 | **Total Accumulated Reserve Distribution Plant** | | | | | 901,869,738 | 902,904,796 | 907,128,206 | 911,634,893 |
| 687 | | | | | | | | | |
| 688 | | | | | | | | | |

| | A | B | C | D | E | AF | AG | AH | AI |
|---|---|---|---|---|---|---|---|---|---|
| 1 | **Public Service Company of New Mexico** | | | | | | | | |
| 2 | **Schedule C-1 a** | | | | | | | | |
| 3 | **Accumulated Provision for Depreciation and Amortization by Functional Classification** | | | | | | | | |
| 4 | **Base Period Ending 6/30/2026** | | | | | | | | |
| 5 | **Test Period Ending 9/30/2028** | | | | | | | | |
| 6 | Link to WP Plant Lead Sheet | | | | | | | | |
| 7 | Base Period data is historical Information from the Company's Books and Records. | | | | | | | | |
| 8 | **This schedule is sponsored by PNM Witness Gutierrez** | | | | | | | | |
| 9 | Please see the Direct Testimony of PNM Witness Gutierrez for discussion of adjustments/changes to the Base Period, Test Period, and Linkage Data. | | | | | | | | |
| 10 | **Description** | **Location Number Note 6** | **FERC** | **Loc/FERC** | **FERC Description** | **Balance 12/1/26** | **Balance 1/1/27** | **Balance 2/1/27** | **Balance 3/1/27** |
| 689 | **Gross Plant G&I Plant (303,389-399)** | | | | | | | | |
| 719 | **Total General & Intangible Plant** | | | | | | | | |
| 720 | | | 303 | | Miscellaneous Intangible Plant | - | - | - | - |
| 721 | | | 389 | | Land and Land Rights | - | - | - | - |
| 722 | | | 390 | | Structures and Improvements | 30,150,669 | 30,075,940 | 30,162,757 | 30,249,523 |
| 723 | | | 390.1 | | Bulk Power Office Building Remodeling | 5,719,207 | 5,717,989 | 5,716,770 | 5,715,551 |
| 724 | | | 390.2 | | Bulk Power Office Building | 5,846,125 | 5,846,125 | 5,846,125 | 5,846,125 |
| 725 | | | 391 | | Office Furniture and Equipment | 2,836,274 | 2,785,443 | 2,806,448 | 2,827,453 |
| 726 | | | 391.1 | | Office Furniture and Equipment - PC System | - | - | - | - |
| 727 | | | 391.2 | | Office Furniture and Equipment - PC's | - | - | - | - |
| 728 | | | 391.3 | | Computer Hardware | - | - | - | - |
| 729 | | | 391.5 | | Computer Hardware - Solar | - | - | - | - |
| 730 | | | 391.7 | | Computer Hardware | - | - | - | - |
| 731 | | | 392 | | Transportation Equipment - Light | 2,157,629 | 2,165,412 | 2,183,180 | 2,200,935 |
| 732 | | | 392.1 | | Transportation Equipment - Heavy | 3,508,002 | 3,499,485 | 3,498,130 | 3,496,688 |
| 733 | | | 392.2 | | Transportation Equipment - Trailers | 3,564,877 | 3,585,427 | 3,609,007 | 3,632,586 |
| 734 | | | 392.4 | | Transportation Equipment - Leaseback | - | - | - | - |
| 735 | | | 393 | | Stores Equipment | 84,520 | 85,065 | 85,609 | 86,153 |
| 736 | | | 394 | | Tools, Shop & Garage Equipment | 9,320,539 | 9,390,034 | 9,476,529 | 9,556,242 |
| 737 | | | 395 | | Laboratory Equipment | 129,085 | 130,804 | 132,523 | 134,242 |
| 738 | | | 396 | | Power Operated Equipment | 4,192,944 | 4,207,119 | 4,223,976 | 4,240,832 |
| 739 | | | 397.01 | | Computer Hardware | 1,850,212 | 359,195 | 373,528 | 387,862 |
| 740 | | | 397.02 | | Computer Software | 22,493,983 | 22,778,552 | 23,055,991 | 23,333,430 |
| 741 | | | 397.03 | | Communication Equipment | - | - | - | - |
| 742 | | | 398 | | Miscellaneous Equipment | 1,211,551 | 1,221,440 | 1,231,330 | 1,241,219 |
| 743 | | | 399.1 | | ARO General Plant-1 | 16,631 | 16,658 | 16,684 | 16,710 |
| 744 | **Total Accumulated Reserve G&I Plant - PNM** | | | | | 93,082,251 | 91,864,689 | 92,418,587 | 92,965,552 |
| 745 | | | | | | | | | |
| 746 | **Total Electric Plant In Service** | | 101/106 | | | 2,591,135,813 | 2,597,624,452 | 2,612,368,894 | 2,627,115,602 |
| 747 | | | | | | | | | |
| 748 | **Electric Plant Purchased** | | 102 | | | | | | |
| 749 | | | | | | | | | |
| 750 | **Electric Plant Acquisition Adjustment** | | | | Acq. Adj. - Palo Verde Unit 1&2 (Drexel) | - | - | - | - |
| 751 | | | | | Acq. Adj. - Palo Verde Unit 2 (First Chicago) | - | - | - | - |
| 752 | | | | | Acq. Adj. - (EIP) | - | - | - | - |
| 753 | **Electric Plant Acquisition Adjustment** | | 114 | | | - | - | - | - |
| 754 | | | | | | | | | |
| 755 | **Total Electric Plant** | | | | | 2,591,135,813 | 2,597,624,452 | 2,612,368,894 | 2,627,115,602 |
| 756 | | | | | | | | | |

| | A | B | C | D | E | AF | AG | AH | AI |
|---|---|---|---|---|---|---|---|---|---|
| 1 | **Public Service Company of New Mexico** | | | | | | | | |
| 2 | **Schedule C-1 a** | | | | | | | | |
| 3 | **Accumulated Provision for Depreciation and Amortization by Functional Classification** | | | | | | | | |
| 4 | **Base Period Ending 6/30/2026** | | | | | | | | |
| 5 | **Test Period Ending 9/30/2028** | | | | | | | | |
| 6 | Link to WP Plant Lead Sheet | | | | | | | | |
| 7 | Base Period data is historical Information from the Company's Books and Records. | | | | | | | | |
| 8 | **This schedule is sponsored by PNM Witness Gutierrez** | | | | | | | | |
| 9 | Please see the Direct Testimony of PNM Witness Gutierrez for discussion of adjustments/changes to the Base Period, Test Period, and Linkage Data. | | | | | | | | |
| 10 | **Description** | **Location Number Note 6** | **FERC** | **Loc/FERC** | **FERC Description** | **Balance 12/1/26** | **Balance 1/1/27** | **Balance 2/1/27** | **Balance 3/1/27** |
| 757 | | | | | | | | | |
| 758 | **Corporate Unallocated** | 900 | 303 | 900303 | Miscellaneous Intangible Plant | - | - | - | - |
| 759 | | 900 | 389 | 900389 | Land and Land Rights | (66,097) | (66,097) | (66,097) | (66,097) |
| 760 | | 900 | 390 | 900390 | Structures and Improvements | 23,333,411 | 23,406,590 | 23,485,328 | 23,563,995 |
| 761 | | 900 | 390.1 | 900390.1 | Bulk Power Office Building Remodeling | - | - | - | - |
| 762 | | 900 | 390.2 | 900390.2 | Bulk Power Office Building | - | - | - | - |
| 763 | | 900 | 391 | 900391 | Office Furniture and Equipment | 334,238 | 339,155 | 345,141 | 351,127 |
| 764 | | 900 | 391.1 | 900391.1 | Office Furniture and Equipment - PC System | - | - | - | - |
| 765 | | 900 | 391.2 | 900391.2 | Office Furniture and Equipment - PC's | - | - | - | - |
| 766 | | 900 | 391.3 | 900391.3 | Computer Hardware | - | - | - | - |
| 767 | | 900 | 391.5 | 900391.5 | Computer Hardware - Solar | - | - | - | - |
| 768 | | 900 | 391.7 | 900391.7 | Computer Hardware | - | - | - | - |
| 769 | | 900 | 392 | 900392 | Transportation Equipment - Light | 149,608 | 151,107 | 152,606 | 154,105 |
| 770 | | 900 | 392.1 | 900392.1 | Transportation Equipment - Heavy | 15,235 | 15,447 | 15,658 | 15,870 |
| 771 | | 900 | 392.2 | 900392.2 | Transportation Equipment - Trailers | 7,061 | 7,089 | 7,118 | 7,147 |
| 772 | | 900 | 392.4 | 900392.4 | Transportation Equipment - Leaseback | (60) | (73) | (85) | (97) |
| 773 | | 900 | 393 | 900393 | Stores Equipment | - | - | - | - |
| 774 | | 900 | 394 | 900394 | Tools, Shop & Garage Equipment | 319,082 | 321,549 | 324,025 | 326,501 |
| 775 | | 900 | 395 | 900395 | Laboratory Equipment | - | - | - | - |
| 776 | | 900 | 396 | 900396 | Power Operated Equipment | 21,549 | 21,608 | 21,668 | 21,728 |
| 777 | | 900 | 397 | 900397 | Communication Equipment | - | - | - | - |
| 778 | | 900 | 397.01 | 900397.01 | Computer Hardware | 21,976,088 | 15,173,720 | 15,768,090 | 16,362,461 |
| 779 | | 900 | 397.02 | 900397.02 | Computer Software | 128,690,288 | 131,368,325 | 133,993,024 | 136,427,751 |
| 780 | | 900 | 397.03 | 900397.03 | Communication Equipment | 3,970,427 | 4,055,387 | 4,140,346 | 4,225,306 |
| 781 | | 900 | 397.2 | 900397.2 | Communication Equipment | - | - | - | - |
| 782 | | 900 | 397.3 | 900397.3 | Communication Equipment | - | - | - | - |
| 783 | | 900 | 398 | 900398 | Miscellaneous Equipment | - | - | - | - |
| 784 | | 900 | 399.1 | 900399.1 | ARO General Plant-1 | - | - | - | - |
| 785 | | | | | | | | | |
| 786 | **Total Accumulated Reserve Corporate Plant** | | | | | 178,750,827 | 174,793,809 | 178,186,824 | 181,389,797 |
| 787 | | | | | | | | | |
| 788 | **Total Electric Plant In Service - with Corporate** | | 101/106 | | | 2,769,886,641 | 2,772,418,261 | 2,790,555,718 | 2,808,505,399 |
| 790 | **Electric Plant Purchased - with Corporate** | | 102 | | | - | - | - | - |
| 792 | **Electric Plant Acq. Adj. - with Corporate** | | 114 | | | - | - | - | - |
| 793 | | | | | | | | | |
| 794 | **Total Electric Plant - with Corporate** | | | | | 2,769,886,641 | 2,772,418,261 | 2,790,555,718 | 2,808,505,399 |

| | A | B | C | D | E | AJ | AK | AL | AM | AN |
|---|---|---|---|---|---|---|---|---|---|---|
| 1 | **Public Service Company of New Mexico** | | | | | | | | | |
| 2 | **Schedule C-1 a** | | | | | | | | | |
| 3 | **Accumulated Provision for Depreciation and Amortization by Functional Classification** | | | | | | | | | |
| 4 | **Base Period Ending 6/30/2026** | | | | | | | | | |
| 5 | **Test Period Ending 9/30/2028** | | | | | | | | | |
| 6 | Link to WP Plant Lead Sheet | | | | | | | | | |
| 7 | Base Period data is historical Information from the Company's Books and Records. | | | | | | | | | |
| 8 | **This schedule is sponsored by PNM Witness Gutierrez** | | | | | | | | | |
| 9 | Please see the Direct Testimony of PNM Witness Gutierrez for discussion of adjustments/changes to the Base Period, Test Period, and Linkage Data. | | | | | | | | | |
| 10 | **Description** | **Location Number Note 6** | **FERC** | **Loc/FERC** | **FERC Description** | **Balance 4/1/27** | **Balance 5/1/27** | **Balance 6/1/27** | **Balance 7/1/27** | **Balance 8/1/27** |
| 11 | | | | | | | | | | |
| 12 | **Accumulated Depreciation Production Plant** | | | | | | | | | |
| 13 | **Steam Production** | | | | | | | | | |
| 56 | **All - Steam** | | | | | | | | | |
| 57 | | | 310 | | Land and Land Rights | - | - | - | - | - |
| 58 | | | 310.1 | | Land Right of Way | 18,537 | 18,568 | 18,598 | 18,629 | 18,659 |
| 59 | | | 311 | | Structures & Improvements | 7,847,206 | 7,851,796 | 7,851,955 | 7,871,874 | 7,888,529 |
| 60 | | | 312 | | Boiler Plant Equipment | 93,900,960 | 94,011,846 | 94,120,742 | 94,235,173 | 94,347,999 |
| 61 | | | 314 | | Turbogenerator Units | 38,579,465 | 38,760,067 | 38,939,701 | 39,123,538 | 39,306,617 |
| 62 | | | 315 | | Accessory Electric Equipment | 10,555,366 | 10,600,838 | 10,646,288 | 10,691,716 | 10,737,123 |
| 63 | | | 315.01 | | Computer Hardware | - | - | - | - | - |
| 64 | | | 315.02 | | Computer Software | 772,673 | 790,848 | 809,023 | 827,198 | 845,373 |
| 65 | | | 315.03 | | Communication Equipment | 209,446 | 211,302 | 213,157 | 215,013 | 216,869 |
| 66 | | | 316 | | Misc Power Plant Equipment | 5,953,086 | 5,989,550 | 6,025,940 | 6,062,255 | 6,098,495 |
| 67 | | | 317 | | Asset Retirement Costs - Steam | 3,693,262 | 3,683,772 | 3,674,282 | 3,664,792 | 3,655,302 |
| 68 | **Total Steam Production Accumulated Reserve** | | | | | 161,530,001 | 161,918,586 | 162,299,687 | 162,710,188 | 163,114,966 |
| 69 | | | | | | | | | | |
| 70 | | | | | | | | | | |
| 71 | **Nuclear Production** | | | | | | | | | |
| 129 | **All - Nuclear** | | | | | | | | | |
| 130 | | | 320 | | Land and Land Rights | 0 | 0 | 0 | 0 | 0 |
| 131 | | | 320.1 | | Land - Right of Way | 30,434 | 30,490 | 30,545 | 30,601 | 30,657 |
| 132 | | | 321 | | Structures and Improvements | 114,921,067 | 115,337,027 | 115,759,892 | 116,172,192 | 116,568,560 |
| 133 | | | 322 | | Reactor Plant Equipment | 180,519,986 | 181,222,023 | 181,955,449 | 182,641,404 | 183,256,813 |
| 134 | | | 323 | | Turbogenerator Units | 62,987,113 | 63,236,062 | 63,484,903 | 63,733,637 | 63,982,264 |
| 135 | | | 324 | | Accessory Electric Equipment | 44,095,465 | 44,198,527 | 44,301,571 | 44,404,596 | 44,507,603 |
| 136 | | | 324.01 | | Computer Hardware | - | - | - | - | - |
| 137 | | | 324.02 | | Computer Software | 5,019,804 | 5,195,246 | 5,373,667 | 5,551,371 | 5,725,563 |
| 138 | | | 324.03 | | Communication Equipment | 210,490 | 212,608 | 215,271 | 217,188 | 218,113 |
| 139 | | | 325 | | Misc Power Plant Equipment | 39,565,870 | 39,727,113 | 39,896,310 | 40,053,483 | 40,192,574 |
| 140 | | | 326 | | Asset Retirement Costs Nuclear Prod Plant | 100,664 | 111,849 | 123,034 | 134,219 | 145,404 |
| 141 | **Total Nuclear Production Accumulated Reserve** | | | | | 447,450,892 | 449,270,945 | 451,140,642 | 452,938,692 | 454,627,550 |
| 142 | | | | | | | | | | |
| 143 | | | | | | | | | | |

| | A | B | C | D | E | AJ | AK | AL | AM | AN |
|---|---|---|---|---|---|---|---|---|---|---|
| 1 | **Public Service Company of New Mexico** | | | | | | | | | |
| 2 | **Schedule C-1 a** | | | | | | | | | |
| 3 | **Accumulated Provision for Depreciation and Amortization by Functional Classification** | | | | | | | | | |
| 4 | **Base Period Ending 6/30/2026** | | | | | | | | | |
| 5 | **Test Period Ending 9/30/2028** | | | | | | | | | |
| 6 | Link to WP Plant Lead Sheet | | | | | | | | | |
| 7 | Base Period data is historical Information from the Company's Books and Records. | | | | | | | | | |
| 8 | **This schedule is sponsored by PNM Witness Gutierrez** | | | | | | | | | |
| 9 | Please see the Direct Testimony of PNM Witness Gutierrez for discussion of adjustments/changes to the Base Period, Test Period, and Linkage Data. | | | | | | | | | |
| 10 | **Description** | **Location Number Note 6** | **FERC** | **Loc/FERC** | **FERC Description** | **Balance 4/1/27** | **Balance 5/1/27** | **Balance 6/1/27** | **Balance 7/1/27** | **Balance 8/1/27** |
| 144 | **Solar Production** | | | | | | | | | |
| 237 | **All - Solar** | | | | | | | | | |
| 238 | | | 338.01 | | Land & Land Rights | - | - | - | - | - |
| 239 | | | 338.02 | | Structures and Improvements | 119,488 | 120,249 | 121,010 | 121,771 | 122,532 |
| 240 | | | 338.04 | | Solar Panels | 114,931,230 | 115,703,316 | 116,475,402 | 117,247,487 | 118,019,573 |
| 241 | | | 338.05 | | Collector System | 2,339,102 | 2,367,717 | 2,396,333 | 2,424,948 | 2,453,564 |
| 242 | | | 338.07 | | Solar Inverters | 152,880 | 174,720 | 196,560 | 218,400 | 240,240 |
| 243 | | | 338.08 | | Other Accessory Electrical Equipment | 12,531,113 | 12,597,640 | 12,664,167 | 12,730,693 | 12,797,220 |
| 244 | | | 338.09 | | Computer Hardware | 19,841 | 20,704 | 21,567 | 22,429 | 23,292 |
| 245 | | | 338.10 | | Computer Software | - | - | - | - | - |
| 246 | | | 338.11 | | Communication Equipment | 205,101 | 208,644 | 212,186 | 215,728 | 219,270 |
| 247 | | | 338.12 | | Misc. Power Plant Equipment | 1,980,722 | 1,994,608 | 2,008,494 | 2,022,380 | 2,036,267 |
| 248 | **Total Solar Production Accumulated Reserve** | | | | | 132,279,477 | 133,187,597 | 134,095,717 | 135,003,837 | 135,911,957 |
| 249 | | | | | | | | | | |
| 250 | **Other Production** | | | | | | | | | |
| 251 | | | | | | | | | | |
| 252 | **Other Production - Gas:** | | | | | | | | | |
| 339 | **All - Gas** | | 340 | | Land and Land Rights | - | - | - | - | - |
| 340 | | | 340.1 | | Land - Right of Way | 802,665 | 808,551 | 814,436 | 820,322 | 826,207 |
| 341 | | | 341 | | Structures and Improvements | 43,997,382 | 44,194,414 | 44,405,904 | 44,617,305 | 44,828,615 |
| 342 | | | 342 | | Fuel Holders, Producers, Accessories | 58,882,393 | 59,214,525 | 59,563,529 | 59,884,043 | 60,233,439 |
| 343 | | | 343 | | Prime Movers | - | - | - | - | - |
| 344 | | | 344 | | Generators | 100,426,754 | 100,899,941 | 101,571,124 | 102,242,094 | 102,912,853 |
| 345 | | | 345 | | Accessory Electric Equipment | 8,889,654 | 8,953,984 | 9,032,527 | 9,110,928 | 9,189,186 |
| 346 | | | 345.01 | | Computer Hardware | 46,704 | 47,602 | 48,500 | (4,487) | (4,487) |
| 347 | | | 345.02 | | Computer Software | 51,995 | 52,807 | 53,620 | 54,432 | 55,244 |
| 348 | | | 345.03 | | Communication Equipment | 7,283 | 7,499 | 7,715 | 7,931 | 8,147 |
| 349 | | | 346 | | Misc Power Plant Equipment | 11,285,441 | 11,364,447 | 11,480,496 | 11,594,781 | 11,710,769 |
| 350 | | | 347 | | Asset Retirement Costs - Other Production | 1,403,639 | 1,429,112 | 1,454,585 | 1,480,058 | 1,505,531 |
| 351 | **Total Other Production Plant - Gas** | | | | | 225,793,912 | 226,972,882 | 228,432,436 | 229,807,407 | 231,265,505 |
| 352 | | | | | | | | | | |
| 353 | | | | | | | | | | |
| 354 | **Total Other Production Accumulated Reserve** | | | | | 225,793,912 | 226,972,882 | 228,432,436 | 229,807,407 | 231,265,505 |

| | A | B | C | D | E | AJ | AK | AL | AM | AN |
|---|---|---|---|---|---|---|---|---|---|---|
| 1 | **Public Service Company of New Mexico** | | | | | | | | | |
| 2 | **Schedule C-1 a** | | | | | | | | | |
| 3 | **Accumulated Provision for Depreciation and Amortization by Functional Classification** | | | | | | | | | |
| 4 | **Base Period Ending 6/30/2026** | | | | | | | | | |
| 5 | **Test Period Ending 9/30/2028** | | | | | | | | | |
| 6 | Link to WP Plant Lead Sheet | | | | | | | | | |
| 7 | Base Period data is historical Information from the Company's Books and Records. | | | | | | | | | |
| 8 | **This schedule is sponsored by PNM Witness Gutierrez** | | | | | | | | | |
| 9 | Please see the Direct Testimony of PNM Witness Gutierrez for discussion of adjustments/changes to the Base Period, Test Period, and Linkage Data. | | | | | | | | | |
| 10 | **Description** | **Location Number Note 6** | **FERC** | **Loc/FERC** | **FERC Description** | **Balance 4/1/27** | **Balance 5/1/27** | **Balance 6/1/27** | **Balance 7/1/27** | **Balance 8/1/27** |
| 355 | | | | | | | | | | |
| 356 | **Total Accumulated Reserve Production** | | | | | 967,054,282 | 971,350,011 | 975,968,482 | 980,460,124 | 984,919,978 |
| 357 | | | | | | | | | | |
| 358 | | | | | | | | | | |
| 359 | **Accumulated Energy Storage Plant** | | | | | | | | | |
| 386 | **All - Energy Storage** | | 387.01 | 387.01 | Land & Land Rights | - | - | - | - | - |
| 387 | | | 387.02 | 387.02 | Structures & Improvements | 564,119 | 623,926 | 683,734 | 743,542 | 803,350 |
| 388 | | | 387.03 | 387.03 | Energy Storage Equipment | 5,207,244 | 5,318,512 | 5,624,368 | 5,930,223 | 6,236,079 |
| 389 | | | 387.05 | 387.05 | Collector System | 782,339 | 848,462 | 914,585 | 980,708 | 1,046,830 |
| 390 | | | 387.06 | 387.06 | Generator Step-Up Transformers (GSU) | 1,440,199 | 1,592,839 | 1,745,478 | 1,898,118 | 2,050,758 |
| 391 | | | 387.07 | 387.07 | Inverters | - | - | - | - | - |
| 392 | | | 387.08 | 387.08 | Computer Hardware | 802,221 | 891,357 | 980,492 | 1,069,628 | 1,158,764 |
| 393 | | | 387.09 | 387.09 | Computer Software | 363,822 | 376,691 | 389,560 | 402,428 | 415,297 |
| 394 | | | 387.10 | 387.10 | Communication Equipment | 49,766 | 52,949 | 56,132 | 59,315 | 62,498 |
| 395 | | | 387.11 | 387.11 | Misc. Energy Storage Equipment | 1,959,926 | 1,980,150 | 2,000,374 | 2,020,598 | 2,040,822 |
| 396 | | | 387.12 | 387.12 | Asset Retirement Costs for Energy Storage | - | - | - | - | - |
| 397 | **Total Energy Storage Plant** | | | | | 11,169,636 | 11,684,885 | 12,394,723 | 13,104,560 | 13,814,397 |
| 398 | | | | | | | | | | |
| 399 | | | | | | | | | | |
| 400 | **Accumulated Reserve Transmission Plant** | | | | | | | | | |
| 453 | **All - Transmission** | | | | | | | | | |
| 454 | | | 350 | | Land and Land Rights | 6,208,777 | 6,208,777 | 6,188,867 | 6,188,867 | 6,185,133 |
| 455 | | | 350.1 | | Land - Right of Way | 26,256,175 | 26,298,893 | 26,341,612 | 26,384,330 | 26,425,181 |
| 456 | | | 351.01 | | Computer Hardware | 5,464,616 | 5,742,464 | 6,035,893 | 6,329,002 | 6,624,493 |
| 457 | | | 351.02 | | Computer Software | 5,752,061 | 5,871,456 | 5,990,851 | 6,110,246 | 6,229,641 |
| 458 | | | 351.03 | | Communication Equipment | 18,632,086 | 18,895,665 | 19,162,014 | 18,838,430 | 19,118,297 |
| 459 | | | 352 | | Structures and Improvements | 27,838,096 | 28,153,936 | 28,539,097 | 28,914,618 | 29,282,456 |
| 460 | | | 353 | | Station Equipment | 248,797,897 | 250,784,688 | 252,197,069 | 254,345,790 | 256,397,132 |
| 461 | | | 353.1 | | Station Equipment - Step-up Xfmr and Aux | 6,870,570 | 6,895,135 | 6,919,691 | 6,944,238 | 6,968,776 |
| 462 | | | 354 | | Towers and Fixtures | 48,450,078 | 48,491,676 | 48,533,249 | 48,574,796 | 48,616,318 |
| 463 | | | 355 | | Poles and Fixtures | 150,919,301 | 152,364,439 | 153,775,528 | 155,243,207 | 156,657,402 |
| 464 | | | 356 | | Overhead Conductors and Devices | 105,669,736 | 106,125,929 | 106,590,719 | 107,054,187 | 107,506,856 |
| 465 | | | 357 | | Underground Conduit | 6,880 | 8,041 | 9,203 | 10,365 | 11,526 |
| 466 | | | 359 | | Roads and Trails | 3,178,170 | 3,190,048 | 3,201,927 | 3,213,805 | 3,225,683 |
| 467 | **Total Accumulated Reserve Transmission Plant** | | | | | 654,044,443 | 659,031,148 | 663,485,718 | 668,151,880 | 673,248,893 |
| 468 | | | | | | | | | | |
| 469 | | | | | | | | | | |

| | A | B | C | D | E | AJ | AK | AL | AM | AN |
|---|---|---|---|---|---|---|---|---|---|---|
| 1 | **Public Service Company of New Mexico** | | | | | | | | | |
| 2 | **Schedule C-1 a** | | | | | | | | | |
| 3 | **Accumulated Provision for Depreciation and Amortization by Functional Classification** | | | | | | | | | |
| 4 | **Base Period Ending 6/30/2026** | | | | | | | | | |
| 5 | **Test Period Ending 9/30/2028** | | | | | | | | | |
| 6 | Link to WP Plant Lead Sheet | | | | | | | | | |
| 7 | Base Period data is historical Information from the Company's Books and Records. | | | | | | | | | |
| 8 | **This schedule is sponsored by PNM Witness Gutierrez** | | | | | | | | | |
| 9 | Please see the Direct Testimony of PNM Witness Gutierrez for discussion of adjustments/changes to the Base Period, Test Period, and Linkage Data. | | | | | | | | | |
| 10 | **Description** | **Location Number Note 6** | **FERC** | **Loc/FERC** | **FERC Description** | **Balance 4/1/27** | **Balance 5/1/27** | **Balance 6/1/27** | **Balance 7/1/27** | **Balance 8/1/27** |
| 470 | | | | | | | | | | |
| 471 | **Accumulated Reserve Distribution Plant** | | | | | | | | | |
| 665 | **All - Distribution** | | | | | | | | | |
| 666 | | | 360 | | Land and Land Rights | 246,799 | 242,297 | 241,205 | 240,066 | 236,742 |
| 667 | | | 360.1 | | Land - Right of Way | 1,132,887 | 1,136,119 | 1,138,500 | 1,142,014 | 1,145,528 |
| 668 | | | 361 | | Structures and Improvements | 13,105,452 | 13,127,449 | 13,217,578 | 13,304,285 | 13,387,740 |
| 669 | | | 362 | | Station Equipment | 112,103,213 | 112,642,765 | 112,983,573 | 112,592,801 | 113,236,442 |
| 670 | | | 363.01 | | Computer Hardware | 3,216,398 | 3,426,757 | 3,656,468 | 3,893,628 | 4,147,146 |
| 671 | | | 363.02 | | Computer Software | 22,624,564 | 23,203,714 | 23,823,097 | 24,449,676 | 25,106,955 |
| 672 | | | 363.03 | | Communication Equipment | 7,324,725 | 7,482,347 | 7,479,540 | 7,587,283 | 7,654,675 |
| 673 | | | 364 | | Poles, Towers and Fixtures | 104,449,492 | 105,664,130 | 106,938,850 | 108,228,326 | 109,501,077 |
| 674 | | | 365 | | Overhead Conductors and Devices | 118,253,095 | 118,953,076 | 119,726,467 | 120,505,547 | 121,341,189 |
| 675 | | | 366 | | Underground Conduit | 75,625,150 | 75,831,111 | 76,051,555 | 76,258,205 | 76,463,017 |
| 676 | | | 367 | | Underground Conductors and Devices | 150,592,507 | 151,178,213 | 151,824,259 | 152,459,057 | 153,089,668 |
| 677 | | | 368 | | Line Transformers | 129,924,943 | 130,346,393 | 130,766,858 | 131,187,294 | 131,605,283 |
| 678 | | | 369 | | Services | 54,908,520 | 55,016,096 | 55,261,619 | 55,507,061 | 55,649,911 |
| 679 | | | 369.1 | | Services - Underground | 88,053,263 | 88,085,520 | 88,554,370 | 89,023,179 | 89,167,320 |
| 680 | | | 370 | | Meters | 14,047,000 | 14,206,430 | 14,338,619 | 14,527,492 | 14,681,535 |
| 681 | | | 370.4 | | Meters - Grid Mod | (1,077,368) | (1,265,139) | (1,390,261) | (1,516,144) | (1,591,939) |
| 682 | | | 371 | | Installations on Customers' Premises | 8,757,764 | 8,772,901 | 8,788,038 | 8,803,176 | 8,818,313 |
| 683 | | | 371.1 | | Leased Flood Lighting | 272,027 | 272,647 | 273,267 | 273,888 | 274,508 |
| 684 | | | 373 | | Street Lighting and Signal Systems | 13,215,397 | 13,243,034 | 13,275,501 | 13,311,188 | 13,347,421 |
| 685 | | | 374 | | Asset Retirement Costs - Distribution | - | - | - | - | - |
| 686 | **Total Accumulated Reserve Distribution Plant** | | | | | 916,775,827 | 921,565,861 | 926,949,105 | 931,778,022 | 937,262,530 |
| 687 | | | | | | | | | | |
| 688 | | | | | | | | | | |

| | A | B | C | D | E | AJ | AK | AL | AM | AN |
|---|---|---|---|---|---|---|---|---|---|---|
| 1 | **Public Service Company of New Mexico** | | | | | | | | | |
| 2 | **Schedule C-1 a** | | | | | | | | | |
| 3 | **Accumulated Provision for Depreciation and Amortization by Functional Classification** | | | | | | | | | |
| 4 | **Base Period Ending 6/30/2026** | | | | | | | | | |
| 5 | **Test Period Ending 9/30/2028** | | | | | | | | | |
| 6 | Link to WP Plant Lead Sheet | | | | | | | | | |
| 7 | Base Period data is historical Information from the Company's Books and Records. | | | | | | | | | |
| 8 | **This schedule is sponsored by PNM Witness Gutierrez** | | | | | | | | | |
| 9 | Please see the Direct Testimony of PNM Witness Gutierrez for discussion of adjustments/changes to the Base Period, Test Period, and Linkage Data. | | | | | | | | | |
| 10 | **Description** | **Location Number Note 6** | **FERC** | **Loc/FERC** | **FERC Description** | **Balance 4/1/27** | **Balance 5/1/27** | **Balance 6/1/27** | **Balance 7/1/27** | **Balance 8/1/27** |
| 689 | **Gross Plant G&I Plant (303,389-399)** | | | | | | | | | |
| 719 | **Total General & Intangible Plant** | | | | | | | | | |
| 720 | | | 303 | | Miscellaneous Intangible Plant | - | - | - | - | - |
| 721 | | | 389 | | Land and Land Rights | - | - | - | - | - |
| 722 | | | 390 | | Structures and Improvements | 30,336,240 | 30,412,039 | 30,472,553 | 30,539,507 | 30,617,904 |
| 723 | | | 390.1 | | Bulk Power Office Building Remodeling | 5,714,332 | 5,713,113 | 5,711,893 | 5,710,672 | 5,709,452 |
| 724 | | | 390.2 | | Bulk Power Office Building | 5,846,125 | 5,846,125 | 5,846,125 | 5,846,125 | 5,846,125 |
| 725 | | | 391 | | Office Furniture and Equipment | 2,848,328 | 2,869,032 | 2,890,070 | 2,908,795 | 2,929,722 |
| 726 | | | 391.1 | | Office Furniture and Equipment - PC System | - | - | - | - | - |
| 727 | | | 391.2 | | Office Furniture and Equipment - PC's | - | - | - | - | - |
| 728 | | | 391.3 | | Computer Hardware | - | - | - | - | - |
| 729 | | | 391.5 | | Computer Hardware - Solar | - | - | - | - | - |
| 730 | | | 391.7 | | Computer Hardware | - | - | - | - | - |
| 731 | | | 392 | | Transportation Equipment - Light | 2,218,611 | 2,235,222 | 2,252,975 | 2,270,664 | 2,288,395 |
| 732 | | | 392.1 | | Transportation Equipment - Heavy | 3,495,159 | 3,493,542 | 3,491,839 | 3,490,047 | 3,488,169 |
| 733 | | | 392.2 | | Transportation Equipment - Trailers | 3,656,165 | 3,679,743 | 3,703,320 | 3,726,896 | 3,750,472 |
| 734 | | | 392.4 | | Transportation Equipment - Leaseback | - | - | - | - | - |
| 735 | | | 393 | | Stores Equipment | 86,697 | 87,241 | 87,785 | 88,329 | 88,873 |
| 736 | | | 394 | | Tools, Shop & Garage Equipment | 9,638,280 | 9,720,753 | 9,808,509 | 9,327,445 | 9,412,517 |
| 737 | | | 395 | | Laboratory Equipment | 135,960 | 137,679 | 139,398 | 141,117 | 142,836 |
| 738 | | | 396 | | Power Operated Equipment | 4,257,460 | 4,274,011 | 4,290,888 | 4,307,381 | 4,324,269 |
| 739 | | | 397.01 | | Computer Hardware | 402,195 | 416,532 | 430,869 | 445,206 | 459,547 |
| 740 | | | 397.02 | | Computer Software | 23,610,868 | 23,903,015 | 24,195,162 | 24,487,309 | 24,779,456 |
| 741 | | | 397.03 | | Communication Equipment | - | - | - | - | - |
| 742 | | | 398 | | Miscellaneous Equipment | 1,251,108 | 1,260,998 | 1,265,463 | 1,245,759 | 1,255,893 |
| 743 | | | 399.1 | | ARO General Plant-1 | 16,736 | 16,763 | 16,789 | 16,815 | 16,841 |
| 744 | **Total Accumulated Reserve G&I Plant - PNM** | | | | | 93,514,264 | 94,065,807 | 94,603,637 | 94,552,069 | 95,110,471 |
| 745 | | | | | | | | | | |
| 746 | **Total Electric Plant In Service** | | 101/106 | | | 2,642,558,451 | 2,657,697,711 | 2,673,401,665 | 2,688,046,655 | 2,704,356,270 |
| 747 | | | | | | | | | | |
| 748 | **Electric Plant Purchased** | | 102 | | | | | | | |
| 749 | | | | | | | | | | |
| 750 | **Electric Plant Acquisition Adjustment** | | | | Acq. Adj. - Palo Verde Unit 1&2 (Drexel) | - | - | - | - | - |
| 751 | | | | | Acq. Adj. - Palo Verde Unit 2 (First Chicago) | - | - | - | - | - |
| 752 | | | | | Acq. Adj. - (EIP) | - | - | - | - | - |
| 753 | **Electric Plant Acquisition Adjustment** | | 114 | | | - | - | - | - | - |
| 754 | | | | | | | | | | |
| 755 | **Total Electric Plant** | | | | | 2,642,558,451 | 2,657,697,711 | 2,673,401,665 | 2,688,046,655 | 2,704,356,270 |
| 756 | | | | | | | | | | |

| | A | B | C | D | E | AJ | AK | AL | AM | AN |
|---|---|---|---|---|---|---|---|---|---|---|
| 1 | **Public Service Company of New Mexico** | | | | | | | | | |
| 2 | **Schedule C-1 a** | | | | | | | | | |
| 3 | **Accumulated Provision for Depreciation and Amortization by Functional Classification** | | | | | | | | | |
| 4 | **Base Period Ending 6/30/2026** | | | | | | | | | |
| 5 | **Test Period Ending 9/30/2028** | | | | | | | | | |
| 6 | Link to WP Plant Lead Sheet | | | | | | | | | |
| 7 | Base Period data is historical Information from the Company's Books and Records. | | | | | | | | | |
| 8 | **This schedule is sponsored by PNM Witness Gutierrez** | | | | | | | | | |
| 9 | Please see the Direct Testimony of PNM Witness Gutierrez for discussion of adjustments/changes to the Base Period, Test Period, and Linkage Data. | | | | | | | | | |
| 10 | **Description** | **Location Number Note 6** | **FERC** | **Loc/FERC** | **FERC Description** | **Balance 4/1/27** | **Balance 5/1/27** | **Balance 6/1/27** | **Balance 7/1/27** | **Balance 8/1/27** |
| 757 | | | | | | | | | | |
| 758 | **Corporate Unallocated** | 900 | 303 | 900303 | Miscellaneous Intangible Plant | - | - | - | - | - |
| 759 | | 900 | 389 | 900389 | Land and Land Rights | (66,097) | (66,097) | (66,097) | (66,097) | (66,097) |
| 760 | | 900 | 390 | 900390 | Structures and Improvements | 23,642,591 | 23,723,028 | 23,803,393 | 23,883,687 | 23,965,891 |
| 761 | | 900 | 390.1 | 900390.1 | Bulk Power Office Building Remodeling | - | - | - | - | - |
| 762 | | 900 | 390.2 | 900390.2 | Bulk Power Office Building | - | - | - | - | - |
| 763 | | 900 | 391 | 900391 | Office Furniture and Equipment | 357,113 | 363,411 | 369,710 | 376,033 | 382,465 |
| 764 | | 900 | 391.1 | 900391.1 | Office Furniture and Equipment - PC System | - | - | - | - | - |
| 765 | | 900 | 391.2 | 900391.2 | Office Furniture and Equipment - PC's | - | - | - | - | - |
| 766 | | 900 | 391.3 | 900391.3 | Computer Hardware | - | - | - | - | - |
| 767 | | 900 | 391.5 | 900391.5 | Computer Hardware - Solar | - | - | - | - | - |
| 768 | | 900 | 391.7 | 900391.7 | Computer Hardware | - | - | - | - | - |
| 769 | | 900 | 392 | 900392 | Transportation Equipment - Light | 155,605 | 157,104 | 158,603 | 160,102 | 161,602 |
| 770 | | 900 | 392.1 | 900392.1 | Transportation Equipment - Heavy | 16,081 | 16,293 | 16,504 | 16,716 | 16,927 |
| 771 | | 900 | 392.2 | 900392.2 | Transportation Equipment - Trailers | 7,175 | 7,204 | 7,232 | 7,261 | 7,289 |
| 772 | | 900 | 392.4 | 900392.4 | Transportation Equipment - Leaseback | (110) | (122) | (134) | (147) | (159) |
| 773 | | 900 | 393 | 900393 | Stores Equipment | - | - | - | - | - |
| 774 | | 900 | 394 | 900394 | Tools, Shop & Garage Equipment | 328,976 | 331,452 | 333,927 | 154,979 | 156,699 |
| 775 | | 900 | 395 | 900395 | Laboratory Equipment | - | - | - | - | - |
| 776 | | 900 | 396 | 900396 | Power Operated Equipment | 21,788 | 21,848 | 21,908 | 21,968 | 22,028 |
| 777 | | 900 | 397 | 900397 | Communication Equipment | - | - | - | - | - |
| 778 | | 900 | 397.01 | 900397.01 | Computer Hardware | 16,956,832 | 17,566,978 | 18,177,125 | 13,453,345 | 13,976,403 |
| 779 | | 900 | 397.02 | 900397.02 | Computer Software | 139,095,394 | 141,754,750 | 144,402,859 | 147,010,095 | 149,617,331 |
| 780 | | 900 | 397.03 | 900397.03 | Communication Equipment | 4,310,265 | 4,395,225 | 4,480,184 | 3,236,078 | 3,298,886 |
| 781 | | 900 | 397.2 | 900397.2 | Communication Equipment | - | - | - | - | - |
| 782 | | 900 | 397.3 | 900397.3 | Communication Equipment | - | - | - | - | - |
| 783 | | 900 | 398 | 900398 | Miscellaneous Equipment | - | - | - | - | - |
| 784 | | 900 | 399.1 | 900399.1 | ARO General Plant-1 | - | - | - | - | - |
| 785 | | | | | | | | | | |
| 786 | **Total Accumulated Reserve Corporate Plant** | | | | | 184,825,614 | 188,271,074 | 191,705,215 | 188,254,020 | 191,539,266 |
| 787 | | | | | | | | | | |
| 788 | **Total Electric Plant In Service - with Corporate** | | 101/106 | | | 2,827,384,065 | 2,845,968,785 | 2,865,106,880 | 2,876,300,675 | 2,895,895,536 |
| 790 | **Electric Plant Purchased - with Corporate** | | 102 | | | - | - | - | - | - |
| 792 | **Electric Plant Acq. Adj. - with Corporate** | | 114 | | | - | - | - | - | - |
| 793 | | | | | | | | | | |
| 794 | **Total Electric Plant - with Corporate** | | | | | 2,827,384,065 | 2,845,968,785 | 2,865,106,880 | 2,876,300,675 | 2,895,895,536 |

| | A | B | C | D | E | AO | AP | AQ |
|---|---|---|---|---|---|---|---|---|
| 1 | **Public Service Company of New Mexico** | | | | | | | |
| 2 | **Schedule C-1 a** | | | | | | | |
| 3 | **Accumulated Provision for Depreciation and Amortization by Functional Classification** | | | | | | | |
| 4 | **Base Period Ending 6/30/2026** | | | | | | | |
| 5 | **Test Period Ending 9/30/2028** | | | | | | | |
| 6 | Link to WP Plant Lead Sheet | | | | | | | |
| 7 | Base Period data is historical Information from the Company's Books and Records. | | | | | | | |
| 8 | **This schedule is sponsored by PNM Witness Gutierrez** | | | | | | | |
| 9 | Please see the Direct Testimony of PNM Witness Gutierrez for discussion of adjustments/changes to the Base Period, Test Period, and Linkage Data. | | | | | | | |
| 10 | **Description** | **Location Number Note 6** | **FERC** | **Loc/FERC** | **FERC Description** | **Balance 9/1/27** | **Linkage Period Ending Balance 9/30/27** | **Reference** |
| 11 | | | | | | | | |
| 12 | **Accumulated Depreciation Production Plant** | | | | | | | |
| 13 | **Steam Production** | | | | | | | |
| 56 | **All - Steam** | | | | | | | |
| 57 | | | 310 | | Land and Land Rights | - | - | |
| 58 | | | 310.1 | | Land Right of Way | 18,690 | 18,720 | |
| 59 | | | 311 | | Structures & Improvements | 7,911,724 | 7,921,405 | |
| 60 | | | 312 | | Boiler Plant Equipment | 94,462,268 | 94,498,135 | |
| 61 | | | 314 | | Turbogenerator Units | 39,491,036 | 39,629,764 | |
| 62 | | | 315 | | Accessory Electric Equipment | 10,782,508 | 10,822,759 | |
| 63 | | | 315.01 | | Computer Hardware | - | - | |
| 64 | | | 315.02 | | Computer Software | 863,548 | 881,723 | |
| 65 | | | 315.03 | | Communication Equipment | 218,725 | 220,581 | |
| 66 | | | 316 | | Misc Power Plant Equipment | 6,134,661 | 6,150,303 | |
| 67 | | | 317 | | Asset Retirement Costs - Steam | 3,645,812 | 3,636,322 | |
| 68 | **Total Steam Production Accumulated Reserve** | | | | | 163,528,971 | 163,779,712 | |
| 69 | | | | | | | | |
| 70 | | | | | | | | |
| 71 | **Nuclear Production** | | | | | | | |
| 129 | **All - Nuclear** | | | | | | | |
| 130 | | | 320 | | Land and Land Rights | 0 | 0 | |
| 131 | | | 320.1 | | Land - Right of Way | 30,712 | 30,768 | |
| 132 | | | 321 | | Structures and Improvements | 116,989,202 | 117,415,184 | |
| 133 | | | 322 | | Reactor Plant Equipment | 183,982,545 | 184,732,435 | |
| 134 | | | 323 | | Turbogenerator Units | 64,230,783 | 64,479,195 | |
| 135 | | | 324 | | Accessory Electric Equipment | 44,610,592 | 44,713,562 | |
| 136 | | | 324.01 | | Computer Hardware | - | - | |
| 137 | | | 324.02 | | Computer Software | 5,910,660 | 6,098,087 | |
| 138 | | | 324.03 | | Communication Equipment | 220,910 | 224,114 | |
| 139 | | | 325 | | Misc Power Plant Equipment | 40,359,542 | 40,532,680 | |
| 140 | | | 326 | | Asset Retirement Costs Nuclear Prod Plant | 156,589 | 167,773 | |
| 141 | **Total Nuclear Production Accumulated Reserve** | | | | | 456,491,534 | 458,393,799 | |
| 142 | | | | | | | | |
| 143 | | | | | | | | |

| | A | B | C | D | E | AO | AP | AQ |
|---|---|---|---|---|---|---|---|---|
| 1 | **Public Service Company of New Mexico** | | | | | | | |
| 2 | **Schedule C-1 a** | | | | | | | |
| 3 | **Accumulated Provision for Depreciation and Amortization by Functional Classification** | | | | | | | |
| 4 | **Base Period Ending 6/30/2026** | | | | | | | |
| 5 | **Test Period Ending 9/30/2028** | | | | | | | |
| 6 | Link to WP Plant Lead Sheet | | | | | | | |
| 7 | Base Period data is historical Information from the Company's Books and Records. | | | | | | | |
| 8 | **This schedule is sponsored by PNM Witness Gutierrez** | | | | | | | |
| 9 | Please see the Direct Testimony of PNM Witness Gutierrez for discussion of adjustments/changes to the Base Period, Test Period, and Linkage Data. | | | | | | | |
| 10 | **Description** | **Location Number Note 6** | **FERC** | **Loc/FERC** | **FERC Description** | **Balance 9/1/27** | **Linkage Period Ending Balance 9/30/27** | **Reference** |
| 144 | **Solar Production** | | | | | | | |
| 237 | **All - Solar** | | | | | | | |
| 238 | | | 338.01 | | Land & Land Rights | - | - | |
| 239 | | | 338.02 | | Structures and Improvements | 123,293 | 124,054 | |
| 240 | | | 338.04 | | Solar Panels | 118,791,659 | 119,563,745 | |
| 241 | | | 338.05 | | Collector System | 2,482,179 | 2,510,795 | |
| 242 | | | 338.07 | | Solar Inverters | 262,080 | 283,920 | |
| 243 | | | 338.08 | | Other Accessory Electrical Equipment | 12,863,747 | 12,930,274 | |
| 244 | | | 338.09 | | Computer Hardware | 24,155 | 25,017 | |
| 245 | | | 338.10 | | Computer Software | - | - | |
| 246 | | | 338.11 | | Communication Equipment | 222,812 | 226,354 | |
| 247 | | | 338.12 | | Misc. Power Plant Equipment | 2,050,153 | 2,064,039 | |
| 248 | **Total Solar Production Accumulated Reserve** | | | | | 136,820,078 | 137,728,198 | |
| 249 | | | | | | | | |
| 250 | **Other Production** | | | | | | | |
| 251 | | | | | | | | |
| 252 | **Other Production - Gas:** | | | | | | | |
| 339 | **All - Gas** | | 340 | | Land and Land Rights | - | - | |
| 340 | | | 340.1 | | Land - Right of Way | 832,093 | 837,978 | |
| 341 | | | 341 | | Structures and Improvements | 45,039,835 | 45,250,966 | |
| 342 | | | 342 | | Fuel Holders, Producers, Accessories | 60,412,809 | 60,764,758 | |
| 343 | | | 343 | | Prime Movers | - | - | |
| 344 | | | 344 | | Generators | 103,583,400 | 104,253,734 | |
| 345 | | | 345 | | Accessory Electric Equipment | 9,267,302 | 9,345,276 | |
| 346 | | | 345.01 | | Computer Hardware | (4,487) | (4,487) | |
| 347 | | | 345.02 | | Computer Software | 56,057 | 56,869 | |
| 348 | | | 345.03 | | Communication Equipment | 8,363 | 8,579 | |
| 349 | | | 346 | | Misc Power Plant Equipment | 11,826,712 | 11,935,361 | |
| 350 | | | 347 | | Asset Retirement Costs - Other Production | 1,531,003 | 1,556,476 | |
| 351 | **Total Other Production Plant - Gas** | | | | | 232,553,087 | 234,005,511 | |
| 352 | | | | | | | | |
| 353 | | | | | | | | |
| 354 | **Total Other Production Accumulated Reserve** | | | | | 232,553,087 | 234,005,511 | |

| | A | B | C | D | E | AO | AP | AQ |
|---|---|---|---|---|---|---|---|---|
| 1 | **Public Service Company of New Mexico** | | | | | | | |
| 2 | **Schedule C-1 a** | | | | | | | |
| 3 | **Accumulated Provision for Depreciation and Amortization by Functional Classification** | | | | | | | |
| 4 | **Base Period Ending 6/30/2026** | | | | | | | |
| 5 | **Test Period Ending 9/30/2028** | | | | | | | |
| 6 | Link to WP Plant Lead Sheet | | | | | | | |
| 7 | Base Period data is historical Information from the Company's Books and Records. | | | | | | | |
| 8 | **This schedule is sponsored by PNM Witness Gutierrez** | | | | | | | |
| 9 | Please see the Direct Testimony of PNM Witness Gutierrez for discussion of adjustments/changes to the Base Period, Test Period, and Linkage Data. | | | | | | | |
| 10 | **Description** | **Location Number Note 6** | **FERC** | **Loc/FERC** | **FERC Description** | **Balance 9/1/27** | **Linkage Period Ending Balance 9/30/27** | **Reference** |
| 355 | | | | | | | | |
| 356 | **Total Accumulated Reserve Production** | | | | | 989,393,670 | 993,907,220 | |
| 357 | | | | | | | | |
| 358 | | | | | | | | |
| 359 | **Accumulated Energy Storage Plant** | | | | | | | |
| 386 | **All - Energy Storage** | | 387.01 | 387.01 | Land & Land Rights | - | - | |
| 387 | | | 387.02 | 387.02 | Structures & Improvements | 863,157 | 922,965 | |
| 388 | | | 387.03 | 387.03 | Energy Storage Equipment | 6,541,934 | 6,847,790 | |
| 389 | | | 387.05 | 387.05 | Collector System | 1,112,953 | 1,179,076 | |
| 390 | | | 387.06 | 387.06 | Generator Step-Up Transformers (GSU) | 2,203,397 | 2,356,037 | |
| 391 | | | 387.07 | 387.07 | Inverters | - | - | |
| 392 | | | 387.08 | 387.08 | Computer Hardware | 1,247,899 | 1,337,035 | |
| 393 | | | 387.09 | 387.09 | Computer Software | 428,166 | 441,034 | |
| 394 | | | 387.10 | 387.10 | Communication Equipment | 65,681 | 68,864 | |
| 395 | | | 387.11 | 387.11 | Misc. Energy Storage Equipment | 2,061,046 | 2,081,270 | |
| 396 | | | 387.12 | 387.12 | Asset Retirement Costs for Energy Storage | - | - | |
| 397 | **Total Energy Storage Plant** | | | | | 14,524,234 | 15,234,071 | |
| 398 | | | | | | | | |
| 399 | | | | | | | | |
| 400 | **Accumulated Reserve Transmission Plant** | | | | | | | |
| 453 | **All - Transmission** | | | | | | | |
| 454 | | | 350 | | Land and Land Rights | 6,185,133 | 6,177,469 | |
| 455 | | | 350.1 | | Land - Right of Way | 26,467,976 | 26,510,770 | |
| 456 | | | 351.01 | | Computer Hardware | 6,924,860 | 7,225,484 | |
| 457 | | | 351.02 | | Computer Software | 6,349,036 | 6,468,431 | |
| 458 | | | 351.03 | | Communication Equipment | 19,411,889 | 19,705,464 | |
| 459 | | | 352 | | Structures and Improvements | 29,682,498 | 30,081,933 | |
| 460 | | | 353 | | Station Equipment | 258,591,548 | 260,406,632 | |
| 461 | | | 353.1 | | Station Equipment - Step-up Xfmr and Aux | 6,993,305 | 7,014,417 | |
| 462 | | | 354 | | Towers and Fixtures | 48,657,813 | 48,699,284 | |
| 463 | | | 355 | | Poles and Fixtures | 158,138,917 | 159,619,771 | |
| 464 | | | 356 | | Overhead Conductors and Devices | 107,974,608 | 108,442,069 | |
| 465 | | | 357 | | Underground Conduit | 12,688 | 13,850 | |
| 466 | | | 359 | | Roads and Trails | 3,237,561 | 3,249,439 | |
| 467 | **Total Accumulated Reserve Transmission Plant** | | | | | 678,627,833 | 683,615,011 | |
| 468 | | | | | | | | |
| 469 | | | | | | | | |

| | A | B | C | D | E | AO | AP | AQ |
|---|---|---|---|---|---|---|---|---|
| 1 | **Public Service Company of New Mexico** | | | | | | | |
| 2 | **Schedule C-1 a** | | | | | | | |
| 3 | **Accumulated Provision for Depreciation and Amortization by Functional Classification** | | | | | | | |
| 4 | **Base Period Ending 6/30/2026** | | | | | | | |
| 5 | **Test Period Ending 9/30/2028** | | | | | | | |
| 6 | Link to WP Plant Lead Sheet | | | | | | | |
| 7 | Base Period data is historical Information from the Company's Books and Records. | | | | | | | |
| 8 | **This schedule is sponsored by PNM Witness Gutierrez** | | | | | | | |
| 9 | Please see the Direct Testimony of PNM Witness Gutierrez for discussion of adjustments/changes to the Base Period, Test Period, and Linkage Data. | | | | | | | |
| 10 | **Description** | **Location Number Note 6** | **FERC** | **Loc/FERC** | **FERC Description** | **Balance 9/1/27** | **Linkage Period Ending Balance 9/30/27** | **Reference** |
| 470 | | | | | | | | |
| 471 | **Accumulated Reserve Distribution Plant** | | | | | | | |
| 665 | **All - Distribution** | | | | | | | |
| 666 | | | 360 | | Land and Land Rights | 234,991 | 233,288 | |
| 667 | | | 360.1 | | Land - Right of Way | 1,149,042 | 1,152,556 | |
| 668 | | | 361 | | Structures and Improvements | 13,473,237 | 13,559,429 | |
| 669 | | | 362 | | Station Equipment | 113,887,702 | 114,350,567 | |
| 670 | | | 363.01 | | Computer Hardware | 4,410,472 | 4,661,538 | |
| 671 | | | 363.02 | | Computer Software | 25,779,545 | 26,377,534 | |
| 672 | | | 363.03 | | Communication Equipment | 7,828,321 | 8,009,278 | |
| 673 | | | 364 | | Poles, Towers and Fixtures | 110,809,067 | 112,134,431 | |
| 674 | | | 365 | | Overhead Conductors and Devices | 122,209,547 | 123,100,285 | |
| 675 | | | 366 | | Underground Conduit | 76,666,266 | 76,890,799 | |
| 676 | | | 367 | | Underground Conductors and Devices | 153,724,680 | 154,381,701 | |
| 677 | | | 368 | | Line Transformers | 132,020,021 | 132,437,339 | |
| 678 | | | 369 | | Services | 55,898,681 | 56,147,371 | |
| 679 | | | 369.1 | | Services - Underground | 89,646,744 | 90,126,128 | |
| 680 | | | 370 | | Meters | 14,872,775 | 15,077,751 | |
| 681 | | | 370.4 | | Meters - Grid Mod | (1,651,225) | (1,826,009) | |
| 682 | | | 371 | | Installations on Customers' Premises | 8,833,451 | 8,848,588 | |
| 683 | | | 371.1 | | Leased Flood Lighting | 275,128 | 275,748 | |
| 684 | | | 373 | | Street Lighting and Signal Systems | 13,386,884 | 13,430,501 | |
| 685 | | | 374 | | Asset Retirement Costs - Distribution | - | - | |
| 686 | **Total Accumulated Reserve Distribution Plant** | | | | | 943,455,330 | 949,368,823 | |
| 687 | | | | | | | | |
| 688 | | | | | | | | |

| | A | B | C | D | E | AO | AP | AQ |
|---|---|---|---|---|---|---|---|---|
| 1 | **Public Service Company of New Mexico** | | | | | | | |
| 2 | **Schedule C-1 a** | | | | | | | |
| 3 | **Accumulated Provision for Depreciation and Amortization by Functional Classification** | | | | | | | |
| 4 | **Base Period Ending 6/30/2026** | | | | | | | |
| 5 | **Test Period Ending 9/30/2028** | | | | | | | |
| 6 | Link to WP Plant Lead Sheet | | | | | | | |
| 7 | Base Period data is historical Information from the Company's Books and Records. | | | | | | | |
| 8 | **This schedule is sponsored by PNM Witness Gutierrez** | | | | | | | |
| 9 | Please see the Direct Testimony of PNM Witness Gutierrez for discussion of adjustments/changes to the Base Period, Test Period, and Linkage Data. | | | | | | | |
| 10 | **Description** | **Location Number Note 6** | **FERC** | **Loc/FERC** | **FERC Description** | **Balance 9/1/27** | **Linkage Period Ending Balance 9/30/27** | **Reference** |
| 689 | **Gross Plant G&I Plant (303,389-399)** | | | | | | | |
| 719 | **Total General & Intangible Plant** | | | | | | | |
| 720 | | | 303 | | Miscellaneous Intangible Plant | - | - | |
| 721 | | | 389 | | Land and Land Rights | - | - | |
| 722 | | | 390 | | Structures and Improvements | 30,707,379 | 30,796,804 | |
| 723 | | | 390.1 | | Bulk Power Office Building Remodeling | 5,708,231 | 5,707,010 | |
| 724 | | | 390.2 | | Bulk Power Office Building | 5,846,125 | 5,846,125 | |
| 725 | | | 391 | | Office Furniture and Equipment | 2,950,794 | 2,971,602 | |
| 726 | | | 391.1 | | Office Furniture and Equipment - PC System | - | - | |
| 727 | | | 391.2 | | Office Furniture and Equipment - PC's | - | - | |
| 728 | | | 391.3 | | Computer Hardware | - | - | |
| 729 | | | 391.5 | | Computer Hardware - Solar | - | - | |
| 730 | | | 391.7 | | Computer Hardware | - | - | |
| 731 | | | 392 | | Transportation Equipment - Light | 2,306,114 | 2,323,596 | |
| 732 | | | 392.1 | | Transportation Equipment - Heavy | 3,486,203 | 3,484,150 | |
| 733 | | | 392.2 | | Transportation Equipment - Trailers | 3,774,047 | 3,797,621 | |
| 734 | | | 392.4 | | Transportation Equipment - Leaseback | - | - | |
| 735 | | | 393 | | Stores Equipment | 89,417 | 89,962 | |
| 736 | | | 394 | | Tools, Shop & Garage Equipment | 9,498,529 | 9,576,564 | |
| 737 | | | 395 | | Laboratory Equipment | 144,555 | 146,274 | |
| 738 | | | 396 | | Power Operated Equipment | 4,341,160 | 4,357,590 | |
| 739 | | | 397.01 | | Computer Hardware | 473,888 | 488,229 | |
| 740 | | | 397.02 | | Computer Software | 25,071,603 | 25,363,750 | |
| 741 | | | 397.03 | | Communication Equipment | - | - | |
| 742 | | | 398 | | Miscellaneous Equipment | 1,266,026 | 1,276,160 | |
| 743 | | | 399.1 | | ARO General Plant-1 | 16,868 | 16,894 | |
| 744 | **Total Accumulated Reserve G&I Plant - PNM** | | | | | 95,680,940 | 96,242,331 | |
| 745 | | | | | | | | |
| 746 | **Total Electric Plant In Service** | | 101/106 | | | 2,721,682,007 | 2,738,367,457 | |
| 747 | | | | | | | | |
| 748 | **Electric Plant Purchased** | | 102 | | | | | |
| 749 | | | | | | | | |
| 750 | **Electric Plant Acquisition Adjustment** | | | | Acq. Adj. - Palo Verde Unit 1&2 (Drexel) | - | - | |
| 751 | | | | | Acq. Adj. - Palo Verde Unit 2 (First Chicago) | - | - | |
| 752 | | | | | Acq. Adj. - (EIP) | - | - | |
| 753 | **Electric Plant Acquisition Adjustment** | | 114 | | | - | - | |
| 754 | | | | | | | | |
| 755 | **Total Electric Plant** | | | | | 2,721,682,007 | 2,738,367,457 | |
| 756 | | | | | | | | |

| | A | B | C | D | E | AO | AP | AQ |
|---|---|---|---|---|---|---|---|---|
| 1 | **Public Service Company of New Mexico** | | | | | | | |
| 2 | **Schedule C-1 a** | | | | | | | |
| 3 | **Accumulated Provision for Depreciation and Amortization by Functional Classification** | | | | | | | |
| 4 | **Base Period Ending 6/30/2026** | | | | | | | |
| 5 | **Test Period Ending 9/30/2028** | | | | | | | |
| 6 | Link to WP Plant Lead Sheet | | | | | | | |
| 7 | Base Period data is historical Information from the Company's Books and Records. | | | | | | | |
| 8 | **This schedule is sponsored by PNM Witness Gutierrez** | | | | | | | |
| 9 | Please see the Direct Testimony of PNM Witness Gutierrez for discussion of adjustments/changes to the Base Period, Test Period, and Linkage Data. | | | | | | | |
| 10 | **Description** | **Location Number Note 6** | **FERC** | **Loc/FERC** | **FERC Description** | **Balance 9/1/27** | **Linkage Period Ending Balance 9/30/27** | **Reference** |
| 757 | | | | | | | | |
| 758 | **Corporate Unallocated** | 900 | 303 | 900303 | Miscellaneous Intangible Plant | - | - | |
| 759 | | 900 | 389 | 900389 | Land and Land Rights | (66,097) | (66,097) | |
| 760 | | 900 | 390 | 900390 | Structures and Improvements | 24,048,025 | 24,130,087 | |
| 761 | | 900 | 390.1 | 900390.1 | Bulk Power Office Building Remodeling | - | - | |
| 762 | | 900 | 390.2 | 900390.2 | Bulk Power Office Building | - | - | |
| 763 | | 900 | 391 | 900391 | Office Furniture and Equipment | 388,898 | 395,330 | |
| 764 | | 900 | 391.1 | 900391.1 | Office Furniture and Equipment - PC System | - | - | |
| 765 | | 900 | 391.2 | 900391.2 | Office Furniture and Equipment - PC's | - | - | |
| 766 | | 900 | 391.3 | 900391.3 | Computer Hardware | - | - | |
| 767 | | 900 | 391.5 | 900391.5 | Computer Hardware - Solar | - | - | |
| 768 | | 900 | 391.7 | 900391.7 | Computer Hardware | - | - | |
| 769 | | 900 | 392 | 900392 | Transportation Equipment - Light | 163,101 | 164,600 | |
| 770 | | 900 | 392.1 | 900392.1 | Transportation Equipment - Heavy | 17,139 | 17,351 | |
| 771 | | 900 | 392.2 | 900392.2 | Transportation Equipment - Trailers | 7,318 | 7,347 | |
| 772 | | 900 | 392.4 | 900392.4 | Transportation Equipment - Leaseback | (172) | (185) | |
| 773 | | 900 | 393 | 900393 | Stores Equipment | - | - | |
| 774 | | 900 | 394 | 900394 | Tools, Shop & Garage Equipment | 158,419 | 160,138 | |
| 775 | | 900 | 395 | 900395 | Laboratory Equipment | - | - | |
| 776 | | 900 | 396 | 900396 | Power Operated Equipment | 22,088 | 22,148 | |
| 777 | | 900 | 397 | 900397 | Communication Equipment | - | - | |
| 778 | | 900 | 397.01 | 900397.01 | Computer Hardware | 14,499,461 | 15,022,519 | |
| 779 | | 900 | 397.02 | 900397.02 | Computer Software | 152,354,583 | 155,091,836 | |
| 780 | | 900 | 397.03 | 900397.03 | Communication Equipment | 3,361,695 | 3,424,503 | |
| 781 | | 900 | 397.2 | 900397.2 | Communication Equipment | - | - | |
| 782 | | 900 | 397.3 | 900397.3 | Communication Equipment | - | - | |
| 783 | | 900 | 398 | 900398 | Miscellaneous Equipment | - | - | |
| 784 | | 900 | 399.1 | 900399.1 | ARO General Plant-1 | - | - | |
| 785 | | | | | | | | |
| 786 | **Total Accumulated Reserve Corporate Plant** | | | | | 194,954,457 | 198,369,577 | |
| 787 | | | | | | | | |
| 788 | **Total Electric Plant In Service - with Corporate** | | 101/106 | | | 2,916,636,464 | 2,936,737,035 | |
| 790 | **Electric Plant Purchased - with Corporate** | | 102 | | | - | - | |
| 792 | **Electric Plant Acq. Adj. - with Corporate** | | 114 | | | - | - | |
| 793 | | | | | | | | |
| 794 | **Total Electric Plant - with Corporate** | | | | | 2,916,636,464 | 2,936,737,035 | |

| | A | B | C | D | E | AR | AS | AT | AU |
|---|---|---|---|---|---|---|---|---|---|
| 1 | **Public Service Company of New Mexico** | | | | | | | | |
| 2 | **Schedule C-1 a** | | | | | | | | |
| 3 | **Accumulated Provision for Depreciation and Amortization by Functional Classification** | | | | | | | | |
| 4 | **Base Period Ending 6/30/2026** | | | | | | | | |
| 5 | **Test Period Ending 9/30/2028** | | | | | | | | |
| 6 | Link to WP Plant Lead Sheet | | | | | | | | |
| 7 | Base Period data is historical Information from the Company's Books and Records. | | | | | | | | |
| 8 | **This schedule is sponsored by PNM Witness Gutierrez** | | | | | | | | |
| 9 | Please see the Direct Testimony of PNM Witness Gutierrez for discussion of adjustments/changes to the Base Period, Test Period, and Linkage Data. | | | | | | | | |
| 10 | **Description** | **Location Number Note 6** | **FERC** | **Loc/FERC** | **FERC Description** | **Test Period Beginning Balance 10/1/27** | **Balance 11/1/27** | **Balance 12/1/27** | **Balance 1/1/28** |
| 11 | | | | | | | | | |
| 12 | **Accumulated Depreciation Production Plant** | | | | | | | | |
| 13 | **Steam Production** | | | | | | | | |
| 56 | **All - Steam** | | | | | | | | |
| 57 | | | 310 | | Land and Land Rights | - | - | - | - |
| 58 | | | 310.1 | | Land Right of Way | 18,720 | 18,748 | 18,776 | 18,804 |
| 59 | | | 311 | | Structures & Improvements | 7,921,405 | 7,937,204 | 7,946,938 | 7,906,622 |
| 60 | | | 312 | | Boiler Plant Equipment | 94,498,135 | 94,462,524 | 94,424,604 | 94,370,665 |
| 61 | | | 314 | | Turbogenerator Units | 39,629,764 | 39,720,979 | 39,810,857 | 39,890,039 |
| 62 | | | 315 | | Accessory Electric Equipment | 10,822,759 | 10,838,221 | 10,853,667 | 10,869,097 |
| 63 | | | 315.01 | | Computer Hardware | - | - | - | - |
| 64 | | | 315.02 | | Computer Software | 881,723 | 899,898 | 918,074 | 936,249 |
| 65 | | | 315.03 | | Communication Equipment | 220,581 | 222,510 | 224,440 | 226,370 |
| 66 | | | 316 | | Misc Power Plant Equipment | 6,150,303 | 6,165,703 | 6,181,028 | 6,196,280 |
| 67 | | | 317 | | Asset Retirement Costs - Steam | 3,636,322 | 3,626,832 | 3,617,342 | 3,607,851 |
| 68 | **Total Steam Production Accumulated Reserve** | | | | | 163,779,712 | 163,892,620 | 163,995,725 | 164,021,976 |
| 69 | | | | | | | | | |
| 70 | | | | | | | | | |
| 71 | **Nuclear Production** | | | | | | | | |
| 129 | **All - Nuclear** | | | | | | | | |
| 130 | | | 320 | | Land and Land Rights | 0 | 0 | 0 | 0 |
| 131 | | | 320.1 | | Land - Right of Way | 30,768 | 30,826 | 30,884 | 30,943 |
| 132 | | | 321 | | Structures and Improvements | 117,415,184 | 117,821,493 | 118,230,048 | 118,421,452 |
| 133 | | | 322 | | Reactor Plant Equipment | 184,732,435 | 185,379,679 | 186,037,184 | 185,717,587 |
| 134 | | | 323 | | Turbogenerator Units | 64,479,195 | 64,688,430 | 64,897,561 | 65,106,589 |
| 135 | | | 324 | | Accessory Electric Equipment | 44,713,562 | 44,784,436 | 44,855,297 | 44,926,145 |
| 136 | | | 324.01 | | Computer Hardware | - | - | - | - |
| 137 | | | 324.02 | | Computer Software | 6,098,087 | 6,284,795 | 6,472,595 | 6,584,461 |
| 138 | | | 324.03 | | Communication Equipment | 224,114 | 226,516 | 229,091 | 216,164 |
| 139 | | | 325 | | Misc Power Plant Equipment | 40,532,680 | 40,705,412 | 40,880,802 | 40,808,071 |
| 140 | | | 326 | | Asset Retirement Costs Nuclear Prod Plant | 167,773 | 178,958 | 190,143 | 201,328 |
| 141 | **Total Nuclear Production Accumulated Reserve** | | | | | 458,393,799 | 460,100,547 | 461,823,606 | 462,012,739 |
| 142 | | | | | | | | | |
| 143 | | | | | | | | | |

| | A | B | C | D | E | AR | AS | AT | AU |
|---|---|---|---|---|---|---|---|---|---|
| 1 | **Public Service Company of New Mexico** | | | | | | | | |
| 2 | **Schedule C-1 a** | | | | | | | | |
| 3 | **Accumulated Provision for Depreciation and Amortization by Functional Classification** | | | | | | | | |
| 4 | **Base Period Ending 6/30/2026** | | | | | | | | |
| 5 | **Test Period Ending 9/30/2028** | | | | | | | | |
| 6 | Link to WP Plant Lead Sheet | | | | | | | | |
| 7 | Base Period data is historical Information from the Company's Books and Records. | | | | | | | | |
| 8 | **This schedule is sponsored by PNM Witness Gutierrez** | | | | | | | | |
| 9 | Please see the Direct Testimony of PNM Witness Gutierrez for discussion of adjustments/changes to the Base Period, Test Period, and Linkage Data. | | | | | | | | |
| 10 | **Description** | **Location Number Note 6** | **FERC** | **Loc/FERC** | **FERC Description** | **Test Period Beginning Balance 10/1/27** | **Balance 11/1/27** | **Balance 12/1/27** | **Balance 1/1/28** |
| 144 | **Solar Production** | | | | | | | | |
| 237 | **All - Solar** | | | | | | | | |
| 238 | | | 338.01 | | Land & Land Rights | - | - | - | - |
| 239 | | | 338.02 | | Structures and Improvements | 124,054 | 124,815 | 125,577 | 126,338 |
| 240 | | | 338.04 | | Solar Panels | 119,563,745 | 120,779,719 | 121,995,694 | 123,211,668 |
| 241 | | | 338.05 | | Collector System | 2,510,795 | 2,537,012 | 2,563,229 | 2,589,447 |
| 242 | | | 338.07 | | Solar Inverters | 283,920 | 344,155 | 404,391 | 464,626 |
| 243 | | | 338.08 | | Other Accessory Electrical Equipment | 12,930,274 | 12,999,273 | 13,068,273 | 13,137,272 |
| 244 | | | 338.09 | | Computer Hardware | 25,017 | 25,848 | 26,679 | 27,510 |
| 245 | | | 338.10 | | Computer Software | - | - | - | - |
| 246 | | | 338.11 | | Communication Equipment | 226,354 | 229,331 | 232,307 | 235,284 |
| 247 | | | 338.12 | | Misc. Power Plant Equipment | 2,064,039 | 2,077,867 | 2,091,695 | 2,105,524 |
| 248 | **Total Solar Production Accumulated Reserve** | | | | | 137,728,198 | 139,118,021 | 140,507,844 | 141,897,667 |
| 249 | | | | | | | | | |
| 250 | **Other Production** | | | | | | | | |
| 251 | | | | | | | | | |
| 252 | **Other Production - Gas:** | | | | | | | | |
| 339 | **All - Gas** | | 340 | | Land and Land Rights | - | - | - | - |
| 340 | | | 340.1 | | Land - Right of Way | 837,978 | 844,266 | 850,553 | 856,841 |
| 341 | | | 341 | | Structures and Improvements | 45,250,966 | 45,455,146 | 45,659,299 | 45,863,352 |
| 342 | | | 342 | | Fuel Holders, Producers, Accessories | 60,764,758 | 61,149,437 | 61,520,859 | 61,896,978 |
| 343 | | | 343 | | Prime Movers | - | - | - | - |
| 344 | | | 344 | | Generators | 104,253,734 | 105,082,267 | 105,763,461 | 106,151,129 |
| 345 | | | 345 | | Accessory Electric Equipment | 9,345,276 | 9,456,348 | 9,565,388 | 9,676,163 |
| 346 | | | 345.01 | | Computer Hardware | (4,487) | (4,487) | (4,487) | (4,487) |
| 347 | | | 345.02 | | Computer Software | 56,869 | 57,682 | 57,682 | 57,682 |
| 348 | | | 345.03 | | Communication Equipment | 8,579 | 8,794 | 9,009 | 9,223 |
| 349 | | | 346 | | Misc Power Plant Equipment | 11,935,361 | 12,023,006 | 11,994,634 | 12,163,631 |
| 350 | | | 347 | | Asset Retirement Costs - Other Production | 1,556,476 | 1,581,949 | 1,607,422 | 1,632,894 |
| 351 | **Total Other Production Plant - Gas** | | | | | 234,005,511 | 235,654,406 | 237,023,819 | 238,303,406 |
| 352 | | | | | | | | | |
| 353 | | | | | | | | | |
| 354 | **Total Other Production Accumulated Reserve** | | | | | 371,733,709 | 374,772,427 | 377,531,663 | 380,201,073 |

| | A | B | C | D | E | AR | AS | AT | AU |
|---|---|---|---|---|---|---|---|---|---|
| 1 | **Public Service Company of New Mexico** | | | | | | | | |
| 2 | **Schedule C-1 a** | | | | | | | | |
| 3 | **Accumulated Provision for Depreciation and Amortization by Functional Classification** | | | | | | | | |
| 4 | **Base Period Ending 6/30/2026** | | | | | | | | |
| 5 | **Test Period Ending 9/30/2028** | | | | | | | | |
| 6 | Link to WP Plant Lead Sheet | | | | | | | | |
| 7 | Base Period data is historical Information from the Company's Books and Records. | | | | | | | | |
| 8 | **This schedule is sponsored by PNM Witness Gutierrez** | | | | | | | | |
| 9 | Please see the Direct Testimony of PNM Witness Gutierrez for discussion of adjustments/changes to the Base Period, Test Period, and Linkage Data. | | | | | | | | |
| 10 | **Description** | **Location Number Note 6** | **FERC** | **Loc/FERC** | **FERC Description** | **Test Period Beginning Balance 10/1/27** | **Balance 11/1/27** | **Balance 12/1/27** | **Balance 1/1/28** |
| 355 | | | | | | | | | |
| 356 | **Total Accumulated Reserve Production** | | | | | 993,907,220 | 998,765,594 | 1,003,350,994 | 1,006,235,788 |
| 357 | | | | | | | | | |
| 358 | | | | | | | | | |
| 359 | **Accumulated Energy Storage Plant** | | | | | | | | |
| 386 | **All - Energy Storage** | | 387.01 | 387.01 | Land & Land Rights | - | - | - | - |
| 387 | | | 387.02 | 387.02 | Structures & Improvements | 922,965 | 1,024,940 | 1,126,916 | 1,228,891 |
| 388 | | | 387.03 | 387.03 | Energy Storage Equipment | 6,847,790 | 7,676,688 | 8,505,587 | 9,334,485 |
| 389 | | | 387.05 | 387.05 | Collector System | 1,179,076 | 1,291,819 | 1,404,562 | 1,517,306 |
| 390 | | | 387.06 | 387.06 | Generator Step-Up Transformers (GSU) | 2,356,037 | 2,616,296 | 2,876,555 | 3,136,813 |
| 391 | | | 387.07 | 387.07 | Inverters | - | - | - | - |
| 392 | | | 387.08 | 387.08 | Computer Hardware | 1,337,035 | 1,410,173 | 1,483,310 | 1,556,448 |
| 393 | | | 387.09 | 387.09 | Computer Software | 441,034 | 453,903 | 466,772 | 479,640 |
| 394 | | | 387.10 | 387.10 | Communication Equipment | 68,864 | 76,478 | 84,092 | 91,706 |
| 395 | | | 387.11 | 387.11 | Misc. Energy Storage Equipment | 2,081,270 | 2,125,516 | 2,169,762 | 2,214,008 |
| 396 | | | 387.12 | 387.12 | Asset Retirement Costs for Energy Storage | - | - | - | - |
| 397 | **Total Energy Storage Plant** | | | | | 15,234,071 | 16,675,813 | 18,117,555 | 19,559,298 |
| 398 | | | | | | | | | |
| 399 | | | | | | | | | |
| 400 | **Accumulated Reserve Transmission Plant** | | | | | | | | |
| 453 | **All - Transmission** | | | | | | | | |
| 454 | | | 350 | | Land and Land Rights | 6,177,469 | 6,177,469 | 6,177,469 | 6,170,584 |
| 455 | | | 350.1 | | Land - Right of Way | 26,510,770 | 26,553,579 | 26,596,389 | 26,638,619 |
| 456 | | | 351.01 | | Computer Hardware | 7,225,484 | 7,618,761 | 8,012,494 | 8,283,594 |
| 457 | | | 351.02 | | Computer Software | 6,468,431 | 6,587,827 | 6,704,716 | 6,818,754 |
| 458 | | | 351.03 | | Communication Equipment | 19,705,464 | 20,019,471 | 20,333,714 | 20,610,956 |
| 459 | | | 352 | | Structures and Improvements | 30,081,933 | 30,527,910 | 30,974,091 | 31,257,820 |
| 460 | | | 353 | | Station Equipment | 260,406,632 | 262,503,161 | 264,598,877 | 266,418,602 |
| 461 | | | 353.1 | | Station Equipment - Step-up Xfmr and Aux | 7,014,417 | 7,038,982 | 7,063,539 | 7,088,087 |
| 462 | | | 354 | | Towers and Fixtures | 48,699,284 | 48,730,165 | 48,761,025 | 48,791,864 |
| 463 | | | 355 | | Poles and Fixtures | 159,619,771 | 161,024,447 | 162,428,908 | 163,750,805 |
| 464 | | | 356 | | Overhead Conductors and Devices | 108,442,069 | 108,913,814 | 109,385,561 | 109,789,186 |
| 465 | | | 357 | | Underground Conduit | 13,850 | 15,230 | 16,610 | 17,990 |
| 466 | | | 359 | | Roads and Trails | 3,249,439 | 3,261,701 | 3,273,963 | 3,286,226 |
| 467 | **Total Accumulated Reserve Transmission Plant** | | | | | 683,615,011 | 688,972,517 | 694,327,356 | 698,923,087 |
| 468 | | | | | | | | | |
| 469 | | | | | | | | | |

| | A | B | C | D | E | AR | AS | AT | AU |
|---|---|---|---|---|---|---|---|---|---|
| 1 | **Public Service Company of New Mexico** | | | | | | | | |
| 2 | **Schedule C-1 a** | | | | | | | | |
| 3 | **Accumulated Provision for Depreciation and Amortization by Functional Classification** | | | | | | | | |
| 4 | **Base Period Ending 6/30/2026** | | | | | | | | |
| 5 | **Test Period Ending 9/30/2028** | | | | | | | | |
| 6 | Link to WP Plant Lead Sheet | | | | | | | | |
| 7 | Base Period data is historical Information from the Company's Books and Records. | | | | | | | | |
| 8 | **This schedule is sponsored by PNM Witness Gutierrez** | | | | | | | | |
| 9 | Please see the Direct Testimony of PNM Witness Gutierrez for discussion of adjustments/changes to the Base Period, Test Period, and Linkage Data. | | | | | | | | |
| 10 | **Description** | **Location Number Note 6** | **FERC** | **Loc/FERC** | **FERC Description** | **Test Period Beginning Balance 10/1/27** | **Balance 11/1/27** | **Balance 12/1/27** | **Balance 1/1/28** |
| 470 | | | | | | | | | |
| 471 | **Accumulated Reserve Distribution Plant** | | | | | | | | |
| 665 | **All - Distribution** | | | | | | | | |
| 666 | | | 360 | | Land and Land Rights | 233,288 | 231,739 | 231,739 | 230,705 |
| 667 | | | 360.1 | | Land - Right of Way | 1,152,556 | 1,155,941 | 1,159,327 | 1,162,713 |
| 668 | | | 361 | | Structures and Improvements | 13,559,429 | 13,678,028 | 13,798,271 | 13,710,527 |
| 669 | | | 362 | | Station Equipment | 114,350,567 | 115,102,446 | 115,867,600 | 115,867,055 |
| 670 | | | 363.01 | | Computer Hardware | 4,661,538 | 4,979,087 | 5,306,797 | 4,314,737 |
| 671 | | | 363.02 | | Computer Software | 26,377,534 | 27,061,304 | 27,755,707 | 28,442,908 |
| 672 | | | 363.03 | | Communication Equipment | 8,009,278 | 8,201,917 | 8,406,692 | 7,936,489 |
| 673 | | | 364 | | Poles, Towers and Fixtures | 112,134,431 | 113,653,422 | 115,199,771 | 115,930,559 |
| 674 | | | 365 | | Overhead Conductors and Devices | 123,100,285 | 124,077,834 | 125,091,023 | 125,692,800 |
| 675 | | | 366 | | Underground Conduit | 76,890,799 | 77,107,816 | 77,329,248 | 77,305,810 |
| 676 | | | 367 | | Underground Conductors and Devices | 154,381,701 | 155,021,166 | 155,671,416 | 155,745,353 |
| 677 | | | 368 | | Line Transformers | 132,437,339 | 132,969,537 | 133,503,643 | 133,887,413 |
| 678 | | | 369 | | Services | 56,147,371 | 56,356,855 | 56,679,891 | 56,939,310 |
| 679 | | | 369.1 | | Services - Underground | 90,126,128 | 90,399,212 | 91,032,029 | 91,463,656 |
| 680 | | | 370 | | Meters | 15,077,751 | 15,254,033 | 15,333,115 | 15,524,680 |
| 681 | | | 370.4 | | Meters - Grid Mod | (1,826,009) | (1,850,394) | (1,860,990) | (2,022,973) |
| 682 | | | 371 | | Installations on Customers' Premises | 8,848,588 | 8,863,851 | 8,879,114 | 8,894,378 |
| 683 | | | 371.1 | | Leased Flood Lighting | 275,748 | 276,079 | 276,409 | 276,740 |
| 684 | | | 373 | | Street Lighting and Signal Systems | 13,430,501 | 13,479,743 | 13,529,116 | 13,426,389 |
| 685 | | | 374 | | Asset Retirement Costs - Distribution | - | - | - | - |
| 686 | **Total Accumulated Reserve Distribution Plant** | | | | | 949,368,823 | 956,019,617 | 963,189,918 | 964,729,248 |
| 687 | | | | | | | | | |
| 688 | | | | | | | | | |

| | A | B | C | D | E | AR | AS | AT | AU |
|---|---|---|---|---|---|---|---|---|---|
| 1 | **Public Service Company of New Mexico** | | | | | | | | |
| 2 | **Schedule C-1 a** | | | | | | | | |
| 3 | **Accumulated Provision for Depreciation and Amortization by Functional Classification** | | | | | | | | |
| 4 | **Base Period Ending 6/30/2026** | | | | | | | | |
| 5 | **Test Period Ending 9/30/2028** | | | | | | | | |
| 6 | Link to WP Plant Lead Sheet | | | | | | | | |
| 7 | Base Period data is historical Information from the Company's Books and Records. | | | | | | | | |
| 8 | **This schedule is sponsored by PNM Witness Gutierrez** | | | | | | | | |
| 9 | Please see the Direct Testimony of PNM Witness Gutierrez for discussion of adjustments/changes to the Base Period, Test Period, and Linkage Data. | | | | | | | | |
| 10 | **Description** | **Location Number Note 6** | **FERC** | **Loc/FERC** | **FERC Description** | **Test Period Beginning Balance 10/1/27** | **Balance 11/1/27** | **Balance 12/1/27** | **Balance 1/1/28** |
| 689 | **Gross Plant G&I Plant (303,389-399)** | | | | | | | | |
| 719 | **Total General & Intangible Plant** | | | | | | | | |
| 720 | | | 303 | | Miscellaneous Intangible Plant | - | - | - | - |
| 721 | | | 389 | | Land and Land Rights | - | - | - | - |
| 722 | | | 390 | | Structures and Improvements | 30,796,804 | 30,841,499 | 30,897,222 | 30,917,999 |
| 723 | | | 390.1 | | Bulk Power Office Building Remodeling | 5,707,010 | 5,706,139 | 5,705,268 | 5,704,396 |
| 724 | | | 390.2 | | Bulk Power Office Building | 5,846,125 | 5,847,349 | 5,848,572 | 5,849,796 |
| 725 | | | 391 | | Office Furniture and Equipment | 2,971,602 | 2,983,433 | 2,995,403 | 2,998,710 |
| 726 | | | 391.1 | | Office Furniture and Equipment - PC System | - | - | - | - |
| 727 | | | 391.2 | | Office Furniture and Equipment - PC's | - | - | - | - |
| 728 | | | 391.3 | | Computer Hardware | - | - | - | - |
| 729 | | | 391.5 | | Computer Hardware - Solar | - | - | - | - |
| 730 | | | 391.7 | | Computer Hardware | - | - | - | - |
| 731 | | | 392 | | Transportation Equipment - Light | 2,323,596 | 2,347,691 | 2,368,216 | 2,379,298 |
| 732 | | | 392.1 | | Transportation Equipment - Heavy | 3,484,150 | 3,475,873 | 3,467,535 | 3,446,029 |
| 733 | | | 392.2 | | Transportation Equipment - Trailers | 3,797,621 | 3,815,412 | 3,833,202 | 3,845,600 |
| 734 | | | 392.4 | | Transportation Equipment - Leaseback | - | - | - | - |
| 735 | | | 393 | | Stores Equipment | 89,962 | 90,307 | 90,653 | 90,998 |
| 736 | | | 394 | | Tools, Shop & Garage Equipment | 9,576,564 | 9,653,986 | 9,732,333 | 9,798,799 |
| 737 | | | 395 | | Laboratory Equipment | 146,274 | 146,333 | 146,393 | 146,453 |
| 738 | | | 396 | | Power Operated Equipment | 4,357,590 | 4,386,311 | 4,415,039 | 4,439,265 |
| 739 | | | 397.01 | | Computer Hardware | 488,229 | 499,999 | 511,769 | 523,540 |
| 740 | | | 397.02 | | Computer Software | 25,363,750 | 25,654,133 | 26,198,436 | 26,691,155 |
| 741 | | | 397.03 | | Communication Equipment | - | - | - | - |
| 742 | | | 398 | | Miscellaneous Equipment | 1,276,160 | 1,284,071 | 1,291,981 | 1,292,073 |
| 743 | | | 399.1 | | ARO General Plant-1 | 16,894 | 16,920 | 16,946 | 16,973 |
| 744 | **Total Accumulated Reserve G&I Plant - PNM** | | | | | 96,242,331 | 96,749,456 | 97,518,968 | 98,141,083 |
| 745 | | | | | | | | | |
| 746 | **Total Electric Plant In Service** | | 101/106 | | | 2,738,367,457 | 2,757,182,997 | 2,776,504,792 | 2,787,588,504 |
| 747 | | | | | | | | | |
| 748 | **Electric Plant Purchased** | | 102 | | | | | | |
| 749 | | | | | | | | | |
| 750 | **Electric Plant Acquisition Adjustment** | | | | Acq. Adj. - Palo Verde Unit 1&2 (Drexel) | - | - | - | - |
| 751 | | | | | Acq. Adj. - Palo Verde Unit 2 (First Chicago) | - | - | - | - |
| 752 | | | | | Acq. Adj. - (EIP) | - | - | - | - |
| 753 | **Electric Plant Acquisition Adjustment** | | 114 | | | - | - | - | - |
| 754 | | | | | | | | | |
| 755 | **Total Electric Plant** | | | | | 2,738,367,457 | 2,757,182,997 | 2,776,504,792 | 2,787,588,504 |
| 756 | | | | | | | | | |

| | A | B | C | D | E | AR | AS | AT | AU |
|---|---|---|---|---|---|---|---|---|---|
| 1 | **Public Service Company of New Mexico** | | | | | | | | |
| 2 | **Schedule C-1 a** | | | | | | | | |
| 3 | **Accumulated Provision for Depreciation and Amortization by Functional Classification** | | | | | | | | |
| 4 | **Base Period Ending 6/30/2026** | | | | | | | | |
| 5 | **Test Period Ending 9/30/2028** | | | | | | | | |
| 6 | Link to WP Plant Lead Sheet | | | | | | | | |
| 7 | Base Period data is historical Information from the Company's Books and Records. | | | | | | | | |
| 8 | **This schedule is sponsored by PNM Witness Gutierrez** | | | | | | | | |
| 9 | Please see the Direct Testimony of PNM Witness Gutierrez for discussion of adjustments/changes to the Base Period, Test Period, and Linkage Data. | | | | | | | | |
| 10 | **Description** | **Location Number Note 6** | **FERC** | **Loc/FERC** | **FERC Description** | **Test Period Beginning Balance 10/1/27** | **Balance 11/1/27** | **Balance 12/1/27** | **Balance 1/1/28** |
| 757 | | | | | | | | | |
| 758 | **Corporate Unallocated** | 900 | 303 | 900303 | Miscellaneous Intangible Plant | - | - | - | - |
| 759 | | 900 | 389 | 900389 | Land and Land Rights | (66,097) | (66,097) | (66,097) | (66,097) |
| 760 | | 900 | 390 | 900390 | Structures and Improvements | 24,130,087 | 24,213,774 | 24,297,652 | 24,381,460 |
| 761 | | 900 | 390.1 | 900390.1 | Bulk Power Office Building Remodeling | - | - | - | - |
| 762 | | 900 | 390.2 | 900390.2 | Bulk Power Office Building | - | - | - | - |
| 763 | | 900 | 391 | 900391 | Office Furniture and Equipment | 395,330 | 401,856 | 409,806 | 417,771 |
| 764 | | 900 | 391.1 | 900391.1 | Office Furniture and Equipment - PC System | - | - | - | - |
| 765 | | 900 | 391.2 | 900391.2 | Office Furniture and Equipment - PC's | - | - | - | - |
| 766 | | 900 | 391.3 | 900391.3 | Computer Hardware | - | - | - | - |
| 767 | | 900 | 391.5 | 900391.5 | Computer Hardware - Solar | - | - | - | - |
| 768 | | 900 | 391.7 | 900391.7 | Computer Hardware | - | - | - | - |
| 769 | | 900 | 392 | 900392 | Transportation Equipment - Light | 164,600 | 166,099 | 167,599 | 169,098 |
| 770 | | 900 | 392.1 | 900392.1 | Transportation Equipment - Heavy | 17,351 | 17,562 | 17,774 | 17,985 |
| 771 | | 900 | 392.2 | 900392.2 | Transportation Equipment - Trailers | 7,347 | 7,375 | 7,404 | 7,432 |
| 772 | | 900 | 392.4 | 900392.4 | Transportation Equipment - Leaseback | (185) | (197) | (210) | (223) |
| 773 | | 900 | 393 | 900393 | Stores Equipment | - | - | - | - |
| 774 | | 900 | 394 | 900394 | Tools, Shop & Garage Equipment | 160,138 | 161,858 | 163,678 | 165,497 |
| 775 | | 900 | 395 | 900395 | Laboratory Equipment | - | - | - | - |
| 776 | | 900 | 396 | 900396 | Power Operated Equipment | 22,148 | 22,208 | 22,268 | 22,328 |
| 777 | | 900 | 397 | 900397 | Communication Equipment | - | - | - | - |
| 778 | | 900 | 397.01 | 900397.01 | Computer Hardware | 15,022,519 | 15,545,619 | 16,069,951 | 12,744,088 |
| 779 | | 900 | 397.02 | 900397.02 | Computer Software | 155,091,836 | 158,247,662 | 161,308,945 | 164,574,574 |
| 780 | | 900 | 397.03 | 900397.03 | Communication Equipment | 3,424,503 | 3,487,311 | 3,550,120 | 3,612,928 |
| 781 | | 900 | 397.2 | 900397.2 | Communication Equipment | - | - | - | - |
| 782 | | 900 | 397.3 | 900397.3 | Communication Equipment | - | - | - | - |
| 783 | | 900 | 398 | 900398 | Miscellaneous Equipment | - | - | - | - |
| 784 | | 900 | 399.1 | 900399.1 | ARO General Plant-1 | - | - | - | - |
| 785 | | | | | | | | | |
| 786 | **Total Accumulated Reserve Corporate Plant** | | | | | 198,369,577 | 202,205,031 | 205,948,888 | 206,046,841 |
| 787 | | | | | | | | | |
| 788 | **Total Electric Plant In Service - with Corporate** | | 101/106 | | | 2,936,737,035 | 2,959,388,028 | 2,982,453,681 | 2,993,635,345 |
| 790 | **Electric Plant Purchased - with Corporate** | | 102 | | | - | - | - | - |
| 792 | **Electric Plant Acq. Adj. - with Corporate** | | 114 | | | - | - | - | - |
| 793 | | | | | | | | | |
| 794 | **Total Electric Plant - with Corporate** | | | | | 2,936,737,035 | 2,959,388,028 | 2,982,453,681 | 2,993,635,345 |

| | A | B | C | D | E | AV | AW | AX |
|---|---|---|---|---|---|---|---|---|
| 1 | **Public Service Company of New Mexico** | | | | | | | |
| 2 | **Schedule C-1 a** | | | | | | | |
| 3 | **Accumulated Provision for Depreciation and Amortization by Functional Classification** | | | | | | | |
| 4 | **Base Period Ending 6/30/2026** | | | | | | | |
| 5 | **Test Period Ending 9/30/2028** | | | | | | | |
| 6 | Link to WP Plant Lead Sheet | | | | | | | |
| 7 | Base Period data is historical Information from the Company's Books and Records. | | | | | | | |
| 8 | **This schedule is sponsored by PNM Witness Gutierrez** | | | | | | | |
| 9 | Please see the Direct Testimony of PNM Witness Gutierrez for discussion of adjustments/changes to the Base Period, Test Period, and Linkage Data. | | | | | | | |
| 10 | **Description** | **Location Number Note 6** | **FERC** | **Loc/FERC** | **FERC Description** | **Balance 2/1/28** | **Balance 3/1/28** | **Balance 4/1/28** |
| 11 | | | | | | | | |
| 12 | **Accumulated Depreciation Production Plant** | | | | | | | |
| 13 | **Steam Production** | | | | | | | |
| 56 | **All - Steam** | | | | | | | |
| 57 | | | 310 | | Land and Land Rights | - | - | - |
| 58 | | | 310.1 | | Land Right of Way | 18,831 | 18,859 | 18,887 |
| 59 | | | 311 | | Structures & Improvements | 7,906,703 | 7,927,026 | 7,888,594 |
| 60 | | | 312 | | Boiler Plant Equipment | 94,328,486 | 94,292,507 | 93,958,529 |
| 61 | | | 314 | | Turbogenerator Units | 39,977,719 | 40,069,902 | 39,987,351 |
| 62 | | | 315 | | Accessory Electric Equipment | 10,884,487 | 10,899,884 | 10,895,869 |
| 63 | | | 315.01 | | Computer Hardware | - | - | - |
| 64 | | | 315.02 | | Computer Software | 953,199 | 970,149 | 987,099 |
| 65 | | | 315.03 | | Communication Equipment | 228,299 | 230,229 | 232,158 |
| 66 | | | 316 | | Misc Power Plant Equipment | 6,211,365 | 6,226,471 | 6,163,919 |
| 67 | | | 317 | | Asset Retirement Costs - Steam | 3,598,361 | 3,588,871 | 3,579,381 |
| 68 | **Total Steam Production Accumulated Reserve** | | | | | 164,107,451 | 164,223,898 | 163,711,787 |
| 69 | | | | | | | | |
| 70 | | | | | | | | |
| 71 | **Nuclear Production** | | | | | | | |
| 129 | **All - Nuclear** | | | | | | | |
| 130 | | | 320 | | Land and Land Rights | 0 | 0 | 0 |
| 131 | | | 320.1 | | Land - Right of Way | 31,001 | 31,059 | 31,117 |
| 132 | | | 321 | | Structures and Improvements | 118,817,262 | 119,231,607 | 119,647,420 |
| 133 | | | 322 | | Reactor Plant Equipment | 186,320,407 | 187,006,828 | 187,699,959 |
| 134 | | | 323 | | Turbogenerator Units | 65,315,512 | 65,524,332 | 65,733,047 |
| 135 | | | 324 | | Accessory Electric Equipment | 44,996,979 | 45,067,800 | 45,138,608 |
| 136 | | | 324.01 | | Computer Hardware | - | - | - |
| 137 | | | 324.02 | | Computer Software | 6,783,152 | 6,989,679 | 7,196,866 |
| 138 | | | 324.03 | | Communication Equipment | 218,381 | 221,974 | 225,679 |
| 139 | | | 325 | | Misc Power Plant Equipment | 40,969,039 | 41,151,215 | 41,335,137 |
| 140 | | | 326 | | Asset Retirement Costs Nuclear Prod Plant | 212,513 | 223,698 | 234,883 |
| 141 | **Total Nuclear Production Accumulated Reserve** | | | | | 463,664,245 | 465,448,191 | 467,242,717 |
| 142 | | | | | | | | |
| 143 | | | | | | | | |

| | A | B | C | D | E | AV | AW | AX |
|---|---|---|---|---|---|---|---|---|
| 1 | **Public Service Company of New Mexico** | | | | | | | |
| 2 | **Schedule C-1 a** | | | | | | | |
| 3 | **Accumulated Provision for Depreciation and Amortization by Functional Classification** | | | | | | | |
| 4 | **Base Period Ending 6/30/2026** | | | | | | | |
| 5 | **Test Period Ending 9/30/2028** | | | | | | | |
| 6 | Link to WP Plant Lead Sheet | | | | | | | |
| 7 | Base Period data is historical Information from the Company's Books and Records. | | | | | | | |
| 8 | **This schedule is sponsored by PNM Witness Gutierrez** | | | | | | | |
| 9 | Please see the Direct Testimony of PNM Witness Gutierrez for discussion of adjustments/changes to the Base Period, Test Period, and Linkage Data. | | | | | | | |
| 10 | **Description** | **Location Number Note 6** | **FERC** | **Loc/FERC** | **FERC Description** | **Balance 2/1/28** | **Balance 3/1/28** | **Balance 4/1/28** |
| 144 | **Solar Production** | | | | | | | |
| 237 | **All - Solar** | | | | | | | |
| 238 | | | 338.01 | | Land & Land Rights | - | - | - |
| 239 | | | 338.02 | | Structures and Improvements | 127,099 | 127,860 | 128,621 |
| 240 | | | 338.04 | | Solar Panels | 124,438,220 | 125,664,771 | 126,891,323 |
| 241 | | | 338.05 | | Collector System | 2,615,664 | 2,641,881 | 2,668,098 |
| 242 | | | 338.07 | | Solar Inverters | 524,862 | 585,097 | 645,333 |
| 243 | | | 338.08 | | Other Accessory Electrical Equipment | 13,206,271 | 13,275,271 | 13,344,270 |
| 244 | | | 338.09 | | Computer Hardware | 28,340 | 29,171 | 30,002 |
| 245 | | | 338.10 | | Computer Software | - | - | - |
| 246 | | | 338.11 | | Communication Equipment | 238,261 | 241,237 | 244,214 |
| 247 | | | 338.12 | | Misc. Power Plant Equipment | 2,119,352 | 2,133,180 | 2,147,008 |
| 248 | **Total Solar Production Accumulated Reserve** | | | | | 143,298,068 | 144,698,468 | 146,098,869 |
| 249 | | | | | | | | |
| 250 | **Other Production** | | | | | | | |
| 251 | | | | | | | | |
| 252 | **Other Production - Gas:** | | | | | | | |
| 339 | **All - Gas** | | 340 | | Land and Land Rights | - | - | - |
| 340 | | | 340.1 | | Land - Right of Way | 863,128 | 869,416 | 875,703 |
| 341 | | | 341 | | Structures and Improvements | 46,067,316 | 46,271,179 | 46,473,922 |
| 342 | | | 342 | | Fuel Holders, Producers, Accessories | 62,282,618 | 62,668,236 | 63,051,252 |
| 343 | | | 343 | | Prime Movers | - | - | - |
| 344 | | | 344 | | Generators | 107,005,482 | 107,859,562 | 108,683,972 |
| 345 | | | 345 | | Accessory Electric Equipment | 9,790,892 | 9,905,407 | 10,018,336 |
| 346 | | | 345.01 | | Computer Hardware | (4,487) | (4,487) | (4,487) |
| 347 | | | 345.02 | | Computer Software | 57,682 | 57,682 | 57,682 |
| 348 | | | 345.03 | | Communication Equipment | 9,438 | 9,653 | 9,868 |
| 349 | | | 346 | | Misc Power Plant Equipment | 12,337,166 | 12,510,634 | 12,684,037 |
| 350 | | | 347 | | Asset Retirement Costs - Other Production | 1,658,367 | 1,683,840 | 1,709,313 |
| 351 | **Total Other Production Plant - Gas** | | | | | 240,067,602 | 241,831,122 | 243,559,598 |
| 352 | | | | | | | | |
| 353 | | | | | | | | |
| 354 | **Total Other Production Accumulated Reserve** | | | | | 383,365,670 | 386,529,591 | 389,658,467 |

| | A | B | C | D | E | AV | AW | AX |
|---|---|---|---|---|---|---|---|---|
| 1 | **Public Service Company of New Mexico** | | | | | | | |
| 2 | **Schedule C-1 a** | | | | | | | |
| 3 | **Accumulated Provision for Depreciation and Amortization by Functional Classification** | | | | | | | |
| 4 | **Base Period Ending 6/30/2026** | | | | | | | |
| 5 | **Test Period Ending 9/30/2028** | | | | | | | |
| 6 | Link to WP Plant Lead Sheet | | | | | | | |
| 7 | Base Period data is historical Information from the Company's Books and Records. | | | | | | | |
| 8 | **This schedule is sponsored by PNM Witness Gutierrez** | | | | | | | |
| 9 | Please see the Direct Testimony of PNM Witness Gutierrez for discussion of adjustments/changes to the Base Period, Test Period, and Linkage Data. | | | | | | | |
| 10 | **Description** | **Location Number Note 6** | **FERC** | **Loc/FERC** | **FERC Description** | **Balance 2/1/28** | **Balance 3/1/28** | **Balance 4/1/28** |
| 355 | | | | | | | | |
| 356 | **Total Accumulated Reserve Production** | | | | | 1,011,137,366 | 1,016,201,679 | 1,020,612,971 |
| 357 | | | | | | | | |
| 358 | | | | | | | | |
| 359 | **Accumulated Energy Storage Plant** | | | | | | | |
| 386 | **All - Energy Storage** | | 387.01 | 387.01 | Land & Land Rights | - | - | - |
| 387 | | | 387.02 | 387.02 | Structures & Improvements | 1,330,867 | 1,432,842 | 1,534,817 |
| 388 | | | 387.03 | 387.03 | Energy Storage Equipment | 10,171,895 | 11,009,305 | 11,846,715 |
| 389 | | | 387.05 | 387.05 | Collector System | 1,630,049 | 1,742,792 | 1,855,535 |
| 390 | | | 387.06 | 387.06 | Generator Step-Up Transformers (GSU) | 3,397,072 | 3,657,331 | 3,917,590 |
| 391 | | | 387.07 | 387.07 | Inverters | - | - | - |
| 392 | | | 387.08 | 387.08 | Computer Hardware | 1,629,585 | 1,702,723 | 1,775,860 |
| 393 | | | 387.09 | 387.09 | Computer Software | 492,509 | 505,378 | 518,246 |
| 394 | | | 387.10 | 387.10 | Communication Equipment | 99,320 | 106,934 | 114,548 |
| 395 | | | 387.11 | 387.11 | Misc. Energy Storage Equipment | 2,258,254 | 2,302,500 | 2,346,747 |
| 396 | | | 387.12 | 387.12 | Asset Retirement Costs for Energy Storage | - | - | - |
| 397 | **Total Energy Storage Plant** | | | | | 21,009,551 | 22,459,805 | 23,910,059 |
| 398 | | | | | | | | |
| 399 | | | | | | | | |
| 400 | **Accumulated Reserve Transmission Plant** | | | | | | | |
| 453 | **All - Transmission** | | | | | | | |
| 454 | | | 350 | | Land and Land Rights | 6,170,584 | 6,150,159 | 6,150,159 |
| 455 | | | 350.1 | | Land - Right of Way | 26,681,452 | 26,724,285 | 26,767,118 |
| 456 | | | 351.01 | | Computer Hardware | 8,694,943 | 9,106,777 | 9,518,457 |
| 457 | | | 351.02 | | Computer Software | 6,932,791 | 7,046,829 | 7,160,866 |
| 458 | | | 351.03 | | Communication Equipment | 20,936,027 | 21,261,352 | 21,585,542 |
| 459 | | | 352 | | Structures and Improvements | 31,717,592 | 32,177,604 | 32,632,538 |
| 460 | | | 353 | | Station Equipment | 268,471,931 | 270,604,852 | 272,738,838 |
| 461 | | | 353.1 | | Station Equipment - Step-up Xfmr and Aux | 7,112,611 | 7,137,141 | 7,148,732 |
| 462 | | | 354 | | Towers and Fixtures | 48,814,929 | 48,846,107 | 48,877,263 |
| 463 | | | 355 | | Poles and Fixtures | 165,158,813 | 166,574,430 | 167,988,033 |
| 464 | | | 356 | | Overhead Conductors and Devices | 110,267,832 | 110,746,485 | 111,224,081 |
| 465 | | | 357 | | Underground Conduit | 19,370 | 20,751 | 22,131 |
| 466 | | | 359 | | Roads and Trails | 3,298,488 | 3,310,749 | 3,323,011 |
| 467 | **Total Accumulated Reserve Transmission Plant** | | | | | 704,277,364 | 709,707,521 | 715,136,769 |
| 468 | | | | | | | | |
| 469 | | | | | | | | |

| | A | B | C | D | E | AV | AW | AX |
|---|---|---|---|---|---|---|---|---|
| 1 | **Public Service Company of New Mexico** | | | | | | | |
| 2 | **Schedule C-1 a** | | | | | | | |
| 3 | **Accumulated Provision for Depreciation and Amortization by Functional Classification** | | | | | | | |
| 4 | **Base Period Ending 6/30/2026** | | | | | | | |
| 5 | **Test Period Ending 9/30/2028** | | | | | | | |
| 6 | Link to WP Plant Lead Sheet | | | | | | | |
| 7 | Base Period data is historical Information from the Company's Books and Records. | | | | | | | |
| 8 | **This schedule is sponsored by PNM Witness Gutierrez** | | | | | | | |
| 9 | Please see the Direct Testimony of PNM Witness Gutierrez for discussion of adjustments/changes to the Base Period, Test Period, and Linkage Data. | | | | | | | |
| 10 | **Description** | **Location Number Note 6** | **FERC** | **Loc/FERC** | **FERC Description** | **Balance 2/1/28** | **Balance 3/1/28** | **Balance 4/1/28** |
| 470 | | | | | | | | |
| 471 | **Accumulated Reserve Distribution Plant** | | | | | | | |
| 665 | **All - Distribution** | | | | | | | |
| 666 | | | 360 | | Land and Land Rights | 230,705 | 230,705 | 220,725 |
| 667 | | | 360.1 | | Land - Right of Way | 1,166,098 | 1,169,484 | 1,172,870 |
| 668 | | | 361 | | Structures and Improvements | 13,835,161 | 13,957,052 | 14,001,100 |
| 669 | | | 362 | | Station Equipment | 116,634,848 | 117,434,820 | 117,794,624 |
| 670 | | | 363.01 | | Computer Hardware | 4,695,418 | 5,116,717 | 5,550,539 |
| 671 | | | 363.02 | | Computer Software | 29,245,941 | 30,144,098 | 31,063,638 |
| 672 | | | 363.03 | | Communication Equipment | 8,166,977 | 8,338,620 | 8,593,639 |
| 673 | | | 364 | | Poles, Towers and Fixtures | 117,502,666 | 119,092,199 | 120,622,067 |
| 674 | | | 365 | | Overhead Conductors and Devices | 126,482,048 | 127,305,749 | 128,155,487 |
| 675 | | | 366 | | Underground Conduit | 77,434,843 | 77,724,089 | 77,976,207 |
| 676 | | | 367 | | Underground Conductors and Devices | 156,316,299 | 157,047,973 | 157,744,348 |
| 677 | | | 368 | | Line Transformers | 134,437,523 | 134,990,317 | 135,550,255 |
| 678 | | | 369 | | Services | 57,264,847 | 57,590,284 | 57,915,621 |
| 679 | | | 369.1 | | Services - Underground | 92,104,853 | 92,745,998 | 93,387,090 |
| 680 | | | 370 | | Meters | 15,646,439 | 15,750,533 | 16,000,565 |
| 681 | | | 370.4 | | Meters - Grid Mod | (2,111,819) | (2,025,715) | (1,904,277) |
| 682 | | | 371 | | Installations on Customers' Premises | 8,909,641 | 8,924,904 | 8,940,167 |
| 683 | | | 371.1 | | Leased Flood Lighting | 277,071 | 277,401 | 277,732 |
| 684 | | | 373 | | Street Lighting and Signal Systems | 13,486,238 | 13,544,632 | 13,603,289 |
| 685 | | | 374 | | Asset Retirement Costs - Distribution | - | - | - |
| 686 | **Total Accumulated Reserve Distribution Plant** | | | | | 971,725,800 | 979,359,859 | 986,665,688 |
| 687 | | | | | | | | |
| 688 | | | | | | | | |

| | A | B | C | D | E | AV | AW | AX |
|---|---|---|---|---|---|---|---|---|
| 1 | **Public Service Company of New Mexico** | | | | | | | |
| 2 | **Schedule C-1 a** | | | | | | | |
| 3 | **Accumulated Provision for Depreciation and Amortization by Functional Classification** | | | | | | | |
| 4 | **Base Period Ending 6/30/2026** | | | | | | | |
| 5 | **Test Period Ending 9/30/2028** | | | | | | | |
| 6 | Link to WP Plant Lead Sheet | | | | | | | |
| 7 | Base Period data is historical Information from the Company's Books and Records. | | | | | | | |
| 8 | **This schedule is sponsored by PNM Witness Gutierrez** | | | | | | | |
| 9 | Please see the Direct Testimony of PNM Witness Gutierrez for discussion of adjustments/changes to the Base Period, Test Period, and Linkage Data. | | | | | | | |
| 10 | **Description** | **Location Number Note 6** | **FERC** | **Loc/FERC** | **FERC Description** | **Balance 2/1/28** | **Balance 3/1/28** | **Balance 4/1/28** |
| 689 | **Gross Plant G&I Plant (303,389-399)** | | | | | | | |
| 719 | **Total General & Intangible Plant** | | | | | | | |
| 720 | | | 303 | | Miscellaneous Intangible Plant | - | - | - |
| 721 | | | 389 | | Land and Land Rights | - | - | - |
| 722 | | | 390 | | Structures and Improvements | 30,975,208 | 30,965,999 | 31,026,952 |
| 723 | | | 390.1 | | Bulk Power Office Building Remodeling | 5,703,524 | 5,702,652 | 5,701,779 |
| 724 | | | 390.2 | | Bulk Power Office Building | 5,851,019 | 5,852,243 | 5,853,466 |
| 725 | | | 391 | | Office Furniture and Equipment | 3,010,681 | 3,022,651 | 3,034,350 |
| 726 | | | 391.1 | | Office Furniture and Equipment - PC System | - | - | - |
| 727 | | | 391.2 | | Office Furniture and Equipment - PC's | - | - | - |
| 728 | | | 391.3 | | Computer Hardware | - | - | - |
| 729 | | | 391.5 | | Computer Hardware - Solar | - | - | - |
| 730 | | | 391.7 | | Computer Hardware | - | - | - |
| 731 | | | 392 | | Transportation Equipment - Light | 2,408,783 | 2,438,250 | 2,467,700 |
| 732 | | | 392.1 | | Transportation Equipment - Heavy | 3,438,066 | 3,430,043 | 3,421,961 |
| 733 | | | 392.2 | | Transportation Equipment - Trailers | 3,863,590 | 3,881,579 | 3,899,568 |
| 734 | | | 392.4 | | Transportation Equipment - Leaseback | - | - | - |
| 735 | | | 393 | | Stores Equipment | 91,344 | 91,689 | 92,035 |
| 736 | | | 394 | | Tools, Shop & Garage Equipment | 9,877,821 | 9,956,842 | 10,027,647 |
| 737 | | | 395 | | Laboratory Equipment | 146,512 | 146,572 | 146,631 |
| 738 | | | 396 | | Power Operated Equipment | 4,468,232 | 4,497,199 | 4,525,689 |
| 739 | | | 397.01 | | Computer Hardware | 535,313 | 547,087 | 558,860 |
| 740 | | | 397.02 | | Computer Software | 27,183,874 | 27,672,762 | 28,161,650 |
| 741 | | | 397.03 | | Communication Equipment | - | - | - |
| 742 | | | 398 | | Miscellaneous Equipment | 1,299,950 | 1,307,826 | 1,315,703 |
| 743 | | | 399.1 | | ARO General Plant-1 | 16,999 | 17,025 | 17,051 |
| 744 | **Total Accumulated Reserve G&I Plant - PNM** | | | | | 98,870,915 | 99,530,419 | 100,251,042 |
| 745 | | | | | | | | |
| 746 | **Total Electric Plant In Service** | | 101/106 | | | 2,807,020,995 | 2,827,259,284 | 2,846,576,529 |
| 747 | | | | | | | | |
| 748 | **Electric Plant Purchased** | | 102 | | | | | |
| 749 | | | | | | | | |
| 750 | **Electric Plant Acquisition Adjustment** | | | | Acq. Adj. - Palo Verde Unit 1&2 (Drexel) | - | - | - |
| 751 | | | | | Acq. Adj. - Palo Verde Unit 2 (First Chicago) | - | - | - |
| 752 | | | | | Acq. Adj. - (EIP) | - | - | - |
| 753 | **Electric Plant Acquisition Adjustment** | | 114 | | | - | - | - |
| 754 | | | | | | | | |
| 755 | **Total Electric Plant** | | | | | 2,807,020,995 | 2,827,259,284 | 2,846,576,529 |
| 756 | | | | | | | | |

| | A | B | C | D | E | AV | AW | AX |
|---|---|---|---|---|---|---|---|---|
| 1 | **Public Service Company of New Mexico** | | | | | | | |
| 2 | **Schedule C-1 a** | | | | | | | |
| 3 | **Accumulated Provision for Depreciation and Amortization by Functional Classification** | | | | | | | |
| 4 | **Base Period Ending 6/30/2026** | | | | | | | |
| 5 | **Test Period Ending 9/30/2028** | | | | | | | |
| 6 | Link to WP Plant Lead Sheet | | | | | | | |
| 7 | Base Period data is historical Information from the Company's Books and Records. | | | | | | | |
| 8 | **This schedule is sponsored by PNM Witness Gutierrez** | | | | | | | |
| 9 | Please see the Direct Testimony of PNM Witness Gutierrez for discussion of adjustments/changes to the Base Period, Test Period, and Linkage Data. | | | | | | | |
| 10 | **Description** | **Location Number Note 6** | **FERC** | **Loc/FERC** | **FERC Description** | **Balance 2/1/28** | **Balance 3/1/28** | **Balance 4/1/28** |
| 757 | | | | | | | | |
| 758 | **Corporate Unallocated** | 900 | 303 | 900303 | Miscellaneous Intangible Plant | - | - | - |
| 759 | | 900 | 389 | 900389 | Land and Land Rights | (66,097) | (66,097) | (66,097) |
| 760 | | 900 | 390 | 900390 | Structures and Improvements | 24,469,105 | 24,556,680 | 24,644,184 |
| 761 | | 900 | 390.1 | 900390.1 | Bulk Power Office Building Remodeling | - | - | - |
| 762 | | 900 | 390.2 | 900390.2 | Bulk Power Office Building | - | - | - |
| 763 | | 900 | 391 | 900391 | Office Furniture and Equipment | 426,778 | 435,785 | 444,793 |
| 764 | | 900 | 391.1 | 900391.1 | Office Furniture and Equipment - PC System | - | - | - |
| 765 | | 900 | 391.2 | 900391.2 | Office Furniture and Equipment - PC's | - | - | - |
| 766 | | 900 | 391.3 | 900391.3 | Computer Hardware | - | - | - |
| 767 | | 900 | 391.5 | 900391.5 | Computer Hardware - Solar | - | - | - |
| 768 | | 900 | 391.7 | 900391.7 | Computer Hardware | - | - | - |
| 769 | | 900 | 392 | 900392 | Transportation Equipment - Light | 170,597 | 172,097 | 173,596 |
| 770 | | 900 | 392.1 | 900392.1 | Transportation Equipment - Heavy | 18,197 | 18,408 | 18,620 |
| 771 | | 900 | 392.2 | 900392.2 | Transportation Equipment - Trailers | 7,461 | 7,489 | 7,518 |
| 772 | | 900 | 392.4 | 900392.4 | Transportation Equipment - Leaseback | (235) | (248) | (261) |
| 773 | | 900 | 393 | 900393 | Stores Equipment | - | - | - |
| 774 | | 900 | 394 | 900394 | Tools, Shop & Garage Equipment | 167,317 | 169,137 | 170,957 |
| 775 | | 900 | 395 | 900395 | Laboratory Equipment | - | - | - |
| 776 | | 900 | 396 | 900396 | Power Operated Equipment | 22,387 | 22,447 | 22,507 |
| 777 | | 900 | 397 | 900397 | Communication Equipment | - | - | - |
| 778 | | 900 | 397.01 | 900397.01 | Computer Hardware | 13,261,711 | 13,779,334 | 14,296,957 |
| 779 | | 900 | 397.02 | 900397.02 | Computer Software | 167,827,315 | 171,016,740 | 174,216,732 |
| 780 | | 900 | 397.03 | 900397.03 | Communication Equipment | 3,675,737 | 3,738,545 | 3,801,353 |
| 781 | | 900 | 397.2 | 900397.2 | Communication Equipment | - | - | - |
| 782 | | 900 | 397.3 | 900397.3 | Communication Equipment | - | - | - |
| 783 | | 900 | 398 | 900398 | Miscellaneous Equipment | - | - | - |
| 784 | | 900 | 399.1 | 900399.1 | ARO General Plant-1 | - | - | - |
| 785 | | | | | | | | |
| 786 | **Total Accumulated Reserve Corporate Plant** | | | | | 209,980,273 | 213,850,318 | 217,730,859 |
| 787 | | | | | | | | |
| 788 | **Total Electric Plant In Service - with Corporate** | | 101/106 | | | 3,017,001,268 | 3,041,109,602 | 3,064,307,388 |
| 790 | **Electric Plant Purchased - with Corporate** | | 102 | | | - | - | - |
| 792 | **Electric Plant Acq. Adj. - with Corporate** | | 114 | | | - | - | - |
| 793 | | | | | | | | |
| 794 | **Total Electric Plant - with Corporate** | | | | | 3,017,001,268 | 3,041,109,602 | 3,064,307,388 |

| | A | B | C | D | E | AY | AZ | BA | BB |
|---|---|---|---|---|---|---|---|---|---|
| 1 | **Public Service Company of New Mexico** | | | | | | | | |
| 2 | **Schedule C-1 a** | | | | | | | | |
| 3 | **Accumulated Provision for Depreciation and Amortization by Functional Classification** | | | | | | | | |
| 4 | **Base Period Ending 6/30/2026** | | | | | | | | |
| 5 | **Test Period Ending 9/30/2028** | | | | | | | | |
| 6 | Link to WP Plant Lead Sheet | | | | | | | | |
| 7 | Base Period data is historical Information from the Company's Books and Records. | | | | | | | | |
| 8 | **This schedule is sponsored by PNM Witness Gutierrez** | | | | | | | | |
| 9 | Please see the Direct Testimony of PNM Witness Gutierrez for discussion of adjustments/changes to the Base Period, Test Period, and Linkage Data. | | | | | | | | |
| 10 | **Description** | **Location Number Note 6** | **FERC** | **Loc/FERC** | **FERC Description** | **Balance 5/1/28** | **Balance 6/1/28** | **Balance 7/1/28** | **Balance 8/1/28** |
| 11 | | | | | | | | | |
| 12 | **Accumulated Depreciation Production Plant** | | | | | | | | |
| 13 | **Steam Production** | | | | | | | | |
| 56 | **All - Steam** | | | | | | | | |
| 57 | | | 310 | | Land and Land Rights | - | - | - | - |
| 58 | | | 310.1 | | Land Right of Way | 18,914 | 18,942 | 18,970 | 18,998 |
| 59 | | | 311 | | Structures & Improvements | 7,844,993 | 7,698,153 | 7,716,917 | 7,735,848 |
| 60 | | | 312 | | Boiler Plant Equipment | 93,680,340 | 93,599,610 | 93,569,859 | 93,539,733 |
| 61 | | | 314 | | Turbogenerator Units | 39,936,500 | 39,996,628 | 40,092,332 | 40,188,038 |
| 62 | | | 315 | | Accessory Electric Equipment | 10,895,860 | 10,911,818 | 10,927,759 | 10,943,684 |
| 63 | | | 315.01 | | Computer Hardware | - | - | - | - |
| 64 | | | 315.02 | | Computer Software | 1,004,049 | 1,020,817 | 1,037,585 | 1,052,675 |
| 65 | | | 315.03 | | Communication Equipment | 234,088 | 236,017 | 237,947 | 239,876 |
| 66 | | | 316 | | Misc Power Plant Equipment | 6,118,007 | 6,136,457 | 6,154,834 | 6,173,137 |
| 67 | | | 317 | | Asset Retirement Costs - Steam | 3,569,891 | 3,560,401 | 3,550,911 | 3,541,420 |
| 68 | **Total Steam Production Accumulated Reserve** | | | | | 163,302,642 | 163,178,844 | 163,307,114 | 163,433,410 |
| 69 | | | | | | | | | |
| 70 | | | | | | | | | |
| 71 | **Nuclear Production** | | | | | | | | |
| 129 | **All - Nuclear** | | | | | | | | |
| 130 | | | 320 | | Land and Land Rights | 0 | 0 | 0 | 0 |
| 131 | | | 320.1 | | Land - Right of Way | 31,175 | 31,234 | 31,292 | 31,350 |
| 132 | | | 321 | | Structures and Improvements | 120,024,057 | 120,439,849 | 120,849,295 | 121,258,903 |
| 133 | | | 322 | | Reactor Plant Equipment | 188,216,852 | 188,910,206 | 189,575,073 | 190,240,918 |
| 134 | | | 323 | | Turbogenerator Units | 65,941,659 | 66,150,167 | 66,358,571 | 66,566,871 |
| 135 | | | 324 | | Accessory Electric Equipment | 45,209,402 | 45,280,184 | 45,350,952 | 45,421,707 |
| 136 | | | 324.01 | | Computer Hardware | - | - | - | - |
| 137 | | | 324.02 | | Computer Software | 7,390,058 | 7,599,900 | 7,807,893 | 8,017,287 |
| 138 | | | 324.03 | | Communication Equipment | 226,590 | 230,400 | 233,762 | 237,161 |
| 139 | | | 325 | | Misc Power Plant Equipment | 41,474,336 | 41,658,239 | 41,834,934 | 42,011,896 |
| 140 | | | 326 | | Asset Retirement Costs Nuclear Prod Plant | 246,068 | 257,253 | 268,438 | 279,622 |
| 141 | **Total Nuclear Production Accumulated Reserve** | | | | | 468,760,199 | 470,557,431 | 472,310,210 | 474,065,717 |
| 142 | | | | | | | | | |
| 143 | | | | | | | | | |

| | A | B | C | D | E | AY | AZ | BA | BB |
|---|---|---|---|---|---|---|---|---|---|
| 1 | **Public Service Company of New Mexico** | | | | | | | | |
| 2 | **Schedule C-1 a** | | | | | | | | |
| 3 | **Accumulated Provision for Depreciation and Amortization by Functional Classification** | | | | | | | | |
| 4 | **Base Period Ending 6/30/2026** | | | | | | | | |
| 5 | **Test Period Ending 9/30/2028** | | | | | | | | |
| 6 | Link to WP Plant Lead Sheet | | | | | | | | |
| 7 | Base Period data is historical Information from the Company's Books and Records. | | | | | | | | |
| 8 | **This schedule is sponsored by PNM Witness Gutierrez** | | | | | | | | |
| 9 | Please see the Direct Testimony of PNM Witness Gutierrez for discussion of adjustments/changes to the Base Period, Test Period, and Linkage Data. | | | | | | | | |
| 10 | **Description** | **Location Number Note 6** | **FERC** | **Loc/FERC** | **FERC Description** | **Balance 5/1/28** | **Balance 6/1/28** | **Balance 7/1/28** | **Balance 8/1/28** |
| 144 | **Solar Production** | | | | | | | | |
| 237 | **All - Solar** | | | | | | | | |
| 238 | | | 338.01 | | Land & Land Rights | - | - | - | - |
| 239 | | | 338.02 | | Structures and Improvements | 129,382 | 130,143 | 130,904 | 131,665 |
| 240 | | | 338.04 | | Solar Panels | 128,117,875 | 129,344,426 | 130,570,978 | 131,797,530 |
| 241 | | | 338.05 | | Collector System | 2,694,316 | 2,720,533 | 2,746,750 | 2,772,967 |
| 242 | | | 338.07 | | Solar Inverters | 705,568 | 765,804 | 826,039 | 886,275 |
| 243 | | | 338.08 | | Other Accessory Electrical Equipment | 13,413,270 | 13,482,269 | 13,551,269 | 13,620,268 |
| 244 | | | 338.09 | | Computer Hardware | 30,832 | 31,663 | 32,494 | 33,325 |
| 245 | | | 338.10 | | Computer Software | - | - | - | - |
| 246 | | | 338.11 | | Communication Equipment | 247,190 | 250,167 | 253,144 | 256,120 |
| 247 | | | 338.12 | | Misc. Power Plant Equipment | 2,160,836 | 2,174,664 | 2,188,492 | 2,202,320 |
| 248 | **Total Solar Production Accumulated Reserve** | | | | | 147,499,269 | 148,899,670 | 150,300,070 | 151,700,471 |
| 249 | | | | | | | | | |
| 250 | **Other Production** | | | | | | | | |
| 251 | | | | | | | | | |
| 252 | **Other Production - Gas:** | | | | | | | | |
| 339 | **All - Gas** | | 340 | | Land and Land Rights | - | - | - | - |
| 340 | | | 340.1 | | Land - Right of Way | 881,991 | 888,278 | 894,566 | 900,853 |
| 341 | | | 341 | | Structures and Improvements | 46,619,185 | 46,819,009 | 47,023,511 | 47,227,912 |
| 342 | | | 342 | | Fuel Holders, Producers, Accessories | 63,368,749 | 63,748,427 | 64,135,349 | 64,522,248 |
| 343 | | | 343 | | Prime Movers | - | - | - | - |
| 344 | | | 344 | | Generators | 108,740,511 | 109,601,107 | 110,473,428 | 111,345,476 |
| 345 | | | 345 | | Accessory Electric Equipment | 10,083,988 | 10,199,918 | 10,315,634 | 10,431,136 |
| 346 | | | 345.01 | | Computer Hardware | (4,487) | (4,487) | (4,487) | (4,487) |
| 347 | | | 345.02 | | Computer Software | 57,682 | 57,682 | 57,682 | 57,682 |
| 348 | | | 345.03 | | Communication Equipment | 10,083 | 10,298 | 10,513 | 10,728 |
| 349 | | | 346 | | Misc Power Plant Equipment | 12,851,455 | 12,964,146 | 13,139,087 | 13,313,962 |
| 350 | | | 347 | | Asset Retirement Costs - Other Production | 1,734,786 | 1,760,258 | 1,785,731 | 1,811,204 |
| 351 | **Total Other Production Plant - Gas** | | | | | 244,343,942 | 246,044,637 | 247,831,014 | 249,616,714 |
| 352 | | | | | | | | | |
| 353 | | | | | | | | | |
| 354 | **Total Other Production Accumulated Reserve** | | | | | 391,843,211 | 394,944,306 | 398,131,084 | 401,317,185 |

| | A | B | C | D | E | AY | AZ | BA | BB |
|---|---|---|---|---|---|---|---|---|---|
| 1 | **Public Service Company of New Mexico** | | | | | | | | |
| 2 | **Schedule C-1 a** | | | | | | | | |
| 3 | **Accumulated Provision for Depreciation and Amortization by Functional Classification** | | | | | | | | |
| 4 | **Base Period Ending 6/30/2026** | | | | | | | | |
| 5 | **Test Period Ending 9/30/2028** | | | | | | | | |
| 6 | Link to WP Plant Lead Sheet | | | | | | | | |
| 7 | Base Period data is historical Information from the Company's Books and Records. | | | | | | | | |
| 8 | **This schedule is sponsored by PNM Witness Gutierrez** | | | | | | | | |
| 9 | Please see the Direct Testimony of PNM Witness Gutierrez for discussion of adjustments/changes to the Base Period, Test Period, and Linkage Data. | | | | | | | | |
| 10 | **Description** | **Location Number Note 6** | **FERC** | **Loc/FERC** | **FERC Description** | **Balance 5/1/28** | **Balance 6/1/28** | **Balance 7/1/28** | **Balance 8/1/28** |
| 355 | | | | | | | | | |
| 356 | **Total Accumulated Reserve Production** | | | | | 1,023,906,051 | 1,028,680,581 | 1,033,748,408 | 1,038,816,311 |
| 357 | | | | | | | | | |
| 358 | | | | | | | | | |
| 359 | **Accumulated Energy Storage Plant** | | | | | | | | |
| 386 | **All - Energy Storage** | | 387.01 | 387.01 | Land & Land Rights | - | - | - | - |
| 387 | | | 387.02 | 387.02 | Structures & Improvements | 1,636,793 | 1,738,768 | 1,840,744 | 1,942,719 |
| 388 | | | 387.03 | 387.03 | Energy Storage Equipment | 12,684,125 | 13,521,535 | 14,358,945 | 15,196,355 |
| 389 | | | 387.05 | 387.05 | Collector System | 1,968,278 | 2,081,021 | 2,193,764 | 2,306,507 |
| 390 | | | 387.06 | 387.06 | Generator Step-Up Transformers (GSU) | 4,177,848 | 4,438,107 | 4,698,366 | 4,958,625 |
| 391 | | | 387.07 | 387.07 | Inverters | - | - | - | - |
| 392 | | | 387.08 | 387.08 | Computer Hardware | 1,848,998 | 1,922,135 | 1,995,273 | 2,068,410 |
| 393 | | | 387.09 | 387.09 | Computer Software | 531,115 | 543,984 | 556,852 | 569,721 |
| 394 | | | 387.10 | 387.10 | Communication Equipment | 122,162 | 129,776 | 137,390 | 145,004 |
| 395 | | | 387.11 | 387.11 | Misc. Energy Storage Equipment | 2,390,993 | 2,435,239 | 2,479,485 | 2,523,731 |
| 396 | | | 387.12 | 387.12 | Asset Retirement Costs for Energy Storage | - | - | - | - |
| 397 | **Total Energy Storage Plant** | | | | | 25,360,312 | 26,810,566 | 28,260,819 | 29,711,073 |
| 398 | | | | | | | | | |
| 399 | | | | | | | | | |
| 400 | **Accumulated Reserve Transmission Plant** | | | | | | | | |
| 453 | **All - Transmission** | | | | | | | | |
| 454 | | | 350 | | Land and Land Rights | 6,150,159 | 6,150,159 | 6,150,159 | 6,150,159 |
| 455 | | | 350.1 | | Land - Right of Way | 26,809,951 | 26,852,783 | 26,895,616 | 26,938,449 |
| 456 | | | 351.01 | | Computer Hardware | 9,931,774 | 10,340,728 | 10,740,848 | 11,162,596 |
| 457 | | | 351.02 | | Computer Software | 7,274,904 | 7,381,313 | 7,522,775 | 7,664,548 |
| 458 | | | 351.03 | | Communication Equipment | 21,911,690 | 22,228,366 | 21,185,210 | 21,507,043 |
| 459 | | | 352 | | Structures and Improvements | 33,093,365 | 33,514,279 | 33,978,043 | 34,443,285 |
| 460 | | | 353 | | Station Equipment | 274,721,565 | 276,818,418 | 277,449,484 | 279,816,789 |
| 461 | | | 353.1 | | Station Equipment - Step-up Xfmr and Aux | 7,162,979 | 7,187,859 | 7,212,730 | 7,237,592 |
| 462 | | | 354 | | Towers and Fixtures | 48,908,398 | 48,939,512 | 48,825,801 | 48,864,054 |
| 463 | | | 355 | | Poles and Fixtures | 169,403,440 | 170,808,912 | 172,097,576 | 173,533,176 |
| 464 | | | 356 | | Overhead Conductors and Devices | 111,701,179 | 112,175,245 | 112,654,004 | 113,133,534 |
| 465 | | | 357 | | Underground Conduit | 20,198 | 21,894 | 23,591 | 25,287 |
| 466 | | | 359 | | Roads and Trails | 3,335,273 | 3,347,534 | 3,359,796 | 3,372,057 |
| 467 | **Total Accumulated Reserve Transmission Plant** | | | | | 720,424,875 | 725,767,003 | 728,095,633 | 733,848,571 |
| 468 | | | | | | | | | |
| 469 | | | | | | | | | |

| | A | B | C | D | E | AY | AZ | BA | BB |
|---|---|---|---|---|---|---|---|---|---|
| 1 | **Public Service Company of New Mexico** | | | | | | | | |
| 2 | **Schedule C-1 a** | | | | | | | | |
| 3 | **Accumulated Provision for Depreciation and Amortization by Functional Classification** | | | | | | | | |
| 4 | **Base Period Ending 6/30/2026** | | | | | | | | |
| 5 | **Test Period Ending 9/30/2028** | | | | | | | | |
| 6 | Link to WP Plant Lead Sheet | | | | | | | | |
| 7 | Base Period data is historical Information from the Company's Books and Records. | | | | | | | | |
| 8 | **This schedule is sponsored by PNM Witness Gutierrez** | | | | | | | | |
| 9 | Please see the Direct Testimony of PNM Witness Gutierrez for discussion of adjustments/changes to the Base Period, Test Period, and Linkage Data. | | | | | | | | |
| 10 | **Description** | **Location Number Note 6** | **FERC** | **Loc/FERC** | **FERC Description** | **Balance 5/1/28** | **Balance 6/1/28** | **Balance 7/1/28** | **Balance 8/1/28** |
| 470 | | | | | | | | | |
| 471 | **Accumulated Reserve Distribution Plant** | | | | | | | | |
| 665 | **All - Distribution** | | | | | | | | |
| 666 | | | 360 | | Land and Land Rights | 218,588 | 218,588 | 218,588 | 216,986 |
| 667 | | | 360.1 | | Land - Right of Way | 1,176,255 | 1,179,641 | 1,183,026 | 1,186,412 |
| 668 | | | 361 | | Structures and Improvements | 14,125,173 | 14,247,579 | 14,369,788 | 14,486,262 |
| 669 | | | 362 | | Station Equipment | 118,577,461 | 119,360,381 | 120,116,712 | 120,863,468 |
| 670 | | | 363.01 | | Computer Hardware | 5,991,447 | 6,440,121 | 6,810,002 | 7,272,264 |
| 671 | | | 363.02 | | Computer Software | 31,981,665 | 32,891,074 | 33,821,587 | 34,746,201 |
| 672 | | | 363.03 | | Communication Equipment | 8,541,678 | 8,788,565 | 7,422,204 | 7,642,397 |
| 673 | | | 364 | | Poles, Towers and Fixtures | 121,999,207 | 123,480,066 | 124,979,617 | 126,435,522 |
| 674 | | | 365 | | Overhead Conductors and Devices | 128,878,383 | 129,779,026 | 130,688,662 | 131,658,584 |
| 675 | | | 366 | | Underground Conduit | 78,128,493 | 78,361,269 | 78,590,748 | 78,822,428 |
| 676 | | | 367 | | Underground Conductors and Devices | 158,220,865 | 158,897,310 | 159,569,843 | 160,236,523 |
| 677 | | | 368 | | Line Transformers | 136,100,093 | 136,650,023 | 137,201,267 | 137,747,358 |
| 678 | | | 369 | | Services | 58,106,311 | 58,437,168 | 58,767,926 | 58,995,255 |
| 679 | | | 369.1 | | Services - Underground | 93,602,060 | 94,261,023 | 94,919,934 | 95,251,580 |
| 680 | | | 370 | | Meters | 16,135,534 | 16,320,948 | 16,582,004 | 16,676,063 |
| 681 | | | 370.4 | | Meters - Grid Mod | (1,775,711) | (1,636,547) | (1,465,842) | (1,303,374) |
| 682 | | | 371 | | Installations on Customers' Premises | 8,955,431 | 8,970,694 | 8,985,957 | 9,001,220 |
| 683 | | | 371.1 | | Leased Flood Lighting | 278,062 | 278,393 | 278,724 | 279,054 |
| 684 | | | 373 | | Street Lighting and Signal Systems | 13,655,140 | 13,700,710 | 13,750,308 | 13,800,853 |
| 685 | | | 374 | | Asset Retirement Costs - Distribution | - | - | - | - |
| 686 | **Total Accumulated Reserve Distribution Plant** | | | | | 992,896,136 | 1,000,626,033 | 1,006,791,056 | 1,014,015,056 |
| 687 | | | | | | | | | |
| 688 | | | | | | | | | |

| | A | B | C | D | E | AY | AZ | BA | BB |
|---|---|---|---|---|---|---|---|---|---|
| 1 | **Public Service Company of New Mexico** | | | | | | | | |
| 2 | **Schedule C-1 a** | | | | | | | | |
| 3 | **Accumulated Provision for Depreciation and Amortization by Functional Classification** | | | | | | | | |
| 4 | **Base Period Ending 6/30/2026** | | | | | | | | |
| 5 | **Test Period Ending 9/30/2028** | | | | | | | | |
| 6 | Link to WP Plant Lead Sheet | | | | | | | | |
| 7 | Base Period data is historical Information from the Company's Books and Records. | | | | | | | | |
| 8 | **This schedule is sponsored by PNM Witness Gutierrez** | | | | | | | | |
| 9 | Please see the Direct Testimony of PNM Witness Gutierrez for discussion of adjustments/changes to the Base Period, Test Period, and Linkage Data. | | | | | | | | |
| 10 | **Description** | **Location Number Note 6** | **FERC** | **Loc/FERC** | **FERC Description** | **Balance 5/1/28** | **Balance 6/1/28** | **Balance 7/1/28** | **Balance 8/1/28** |
| 689 | **Gross Plant G&I Plant (303,389-399)** | | | | | | | | |
| 719 | **Total General & Intangible Plant** | | | | | | | | |
| 720 | | | 303 | | Miscellaneous Intangible Plant | - | - | - | - |
| 721 | | | 389 | | Land and Land Rights | - | - | - | - |
| 722 | | | 390 | | Structures and Improvements | 31,077,231 | 31,138,456 | 31,199,645 | 31,250,159 |
| 723 | | | 390.1 | | Bulk Power Office Building Remodeling | 5,700,907 | 5,700,033 | 5,699,160 | 5,698,287 |
| 724 | | | 390.2 | | Bulk Power Office Building | 5,854,689 | 5,855,913 | 5,857,136 | 5,858,360 |
| 725 | | | 391 | | Office Furniture and Equipment | 3,046,205 | 3,058,201 | 3,069,925 | 3,081,806 |
| 726 | | | 391.1 | | Office Furniture and Equipment - PC System | - | - | - | - |
| 727 | | | 391.2 | | Office Furniture and Equipment - PC's | - | - | - | - |
| 728 | | | 391.3 | | Computer Hardware | - | - | - | - |
| 729 | | | 391.5 | | Computer Hardware - Solar | - | - | - | - |
| 730 | | | 391.7 | | Computer Hardware | - | - | - | - |
| 731 | | | 392 | | Transportation Equipment - Light | 2,496,950 | 2,524,495 | 2,553,978 | 2,583,444 |
| 732 | | | 392.1 | | Transportation Equipment - Heavy | 3,413,818 | 3,405,616 | 3,397,354 | 3,389,033 |
| 733 | | | 392.2 | | Transportation Equipment - Trailers | 3,917,556 | 3,935,543 | 3,953,530 | 3,971,517 |
| 734 | | | 392.4 | | Transportation Equipment - Leaseback | - | - | - | - |
| 735 | | | 393 | | Stores Equipment | 92,380 | 92,726 | 88,940 | 89,271 |
| 736 | | | 394 | | Tools, Shop & Garage Equipment | 10,106,201 | 10,185,870 | 9,767,079 | 9,844,566 |
| 737 | | | 395 | | Laboratory Equipment | 146,691 | 146,751 | 146,810 | 146,870 |
| 738 | | | 396 | | Power Operated Equipment | 4,554,678 | 4,583,677 | 4,612,199 | 4,641,221 |
| 739 | | | 397.01 | | Computer Hardware | 570,658 | 582,457 | 594,255 | 606,079 |
| 740 | | | 397.02 | | Computer Software | 28,650,539 | 29,139,427 | 29,628,315 | 30,117,204 |
| 741 | | | 397.03 | | Communication Equipment | - | - | - | - |
| 742 | | | 398 | | Miscellaneous Equipment | 1,323,580 | 1,331,457 | 1,339,333 | 1,347,210 |
| 743 | | | 399.1 | | ARO General Plant-1 | 17,078 | 17,104 | 17,130 | 17,156 |
| 744 | **Total Accumulated Reserve G&I Plant - PNM** | | | | | 100,969,160 | 101,697,725 | 101,924,791 | 102,642,182 |
| 745 | | | | | | | | | |
| 746 | **Total Electric Plant In Service** | | 101/106 | | | 2,863,556,534 | 2,883,581,908 | 2,898,820,707 | 2,919,033,194 |
| 747 | | | | | | | | | |
| 748 | **Electric Plant Purchased** | | 102 | | | | | | |
| 749 | | | | | | | | | |
| 750 | **Electric Plant Acquisition Adjustment** | | | | Acq. Adj. - Palo Verde Unit 1&2 (Drexel) | - | - | - | - |
| 751 | | | | | Acq. Adj. - Palo Verde Unit 2 (First Chicago) | - | - | - | - |
| 752 | | | | | Acq. Adj. - (EIP) | - | - | - | - |
| 753 | **Electric Plant Acquisition Adjustment** | | 114 | | | - | - | - | - |
| 754 | | | | | | | | | |
| 755 | **Total Electric Plant** | | | | | 2,863,556,534 | 2,883,581,908 | 2,898,820,707 | 2,919,033,194 |
| 756 | | | | | | | | | |

| | A | B | C | D | E | AY | AZ | BA | BB |
|---|---|---|---|---|---|---|---|---|---|
| 1 | **Public Service Company of New Mexico** | | | | | | | | |
| 2 | **Schedule C-1 a** | | | | | | | | |
| 3 | **Accumulated Provision for Depreciation and Amortization by Functional Classification** | | | | | | | | |
| 4 | **Base Period Ending 6/30/2026** | | | | | | | | |
| 5 | **Test Period Ending 9/30/2028** | | | | | | | | |
| 6 | Link to WP Plant Lead Sheet | | | | | | | | |
| 7 | Base Period data is historical Information from the Company's Books and Records. | | | | | | | | |
| 8 | **This schedule is sponsored by PNM Witness Gutierrez** | | | | | | | | |
| 9 | Please see the Direct Testimony of PNM Witness Gutierrez for discussion of adjustments/changes to the Base Period, Test Period, and Linkage Data. | | | | | | | | |
| 10 | **Description** | **Location Number Note 6** | **FERC** | **Loc/FERC** | **FERC Description** | **Balance 5/1/28** | **Balance 6/1/28** | **Balance 7/1/28** | **Balance 8/1/28** |
| 757 | | | | | | | | | |
| 758 | **Corporate Unallocated** | 900 | 303 | 900303 | Miscellaneous Intangible Plant | - | - | - | - |
| 759 | | 900 | 389 | 900389 | Land and Land Rights | (66,097) | (66,097) | (66,097) | (66,097) |
| 760 | | 900 | 390 | 900390 | Structures and Improvements | 24,731,805 | 24,821,841 | 24,911,806 | 25,001,888 |
| 761 | | 900 | 390.1 | 900390.1 | Bulk Power Office Building Remodeling | - | - | - | - |
| 762 | | 900 | 390.2 | 900390.2 | Bulk Power Office Building | - | - | - | - |
| 763 | | 900 | 391 | 900391 | Office Furniture and Equipment | 453,844 | 463,032 | 465,723 | 475,216 |
| 764 | | 900 | 391.1 | 900391.1 | Office Furniture and Equipment - PC System | - | - | - | - |
| 765 | | 900 | 391.2 | 900391.2 | Office Furniture and Equipment - PC's | - | - | - | - |
| 766 | | 900 | 391.3 | 900391.3 | Computer Hardware | - | - | - | - |
| 767 | | 900 | 391.5 | 900391.5 | Computer Hardware - Solar | - | - | - | - |
| 768 | | 900 | 391.7 | 900391.7 | Computer Hardware | - | - | - | - |
| 769 | | 900 | 392 | 900392 | Transportation Equipment - Light | 175,095 | 176,594 | 178,094 | 179,593 |
| 770 | | 900 | 392.1 | 900392.1 | Transportation Equipment - Heavy | 18,832 | 19,043 | 19,255 | 19,466 |
| 771 | | 900 | 392.2 | 900392.2 | Transportation Equipment - Trailers | 7,547 | 7,575 | 7,604 | 7,632 |
| 772 | | 900 | 392.4 | 900392.4 | Transportation Equipment - Leaseback | (274) | (287) | (300) | (313) |
| 773 | | 900 | 393 | 900393 | Stores Equipment | - | - | - | - |
| 774 | | 900 | 394 | 900394 | Tools, Shop & Garage Equipment | 172,776 | 174,596 | 176,416 | 178,235 |
| 775 | | 900 | 395 | 900395 | Laboratory Equipment | - | - | - | - |
| 776 | | 900 | 396 | 900396 | Power Operated Equipment | 22,567 | 22,627 | 22,687 | 22,747 |
| 777 | | 900 | 397 | 900397 | Communication Equipment | - | - | - | - |
| 778 | | 900 | 397.01 | 900397.01 | Computer Hardware | 14,817,131 | 15,337,305 | 15,219,805 | 15,753,722 |
| 779 | | 900 | 397.02 | 900397.02 | Computer Software | 177,385,714 | 180,531,904 | 183,700,042 | 186,865,505 |
| 780 | | 900 | 397.03 | 900397.03 | Communication Equipment | 3,864,162 | 3,926,970 | 2,180,196 | 2,212,845 |
| 781 | | 900 | 397.2 | 900397.2 | Communication Equipment | - | - | - | - |
| 782 | | 900 | 397.3 | 900397.3 | Communication Equipment | - | - | - | - |
| 783 | | 900 | 398 | 900398 | Miscellaneous Equipment | - | - | - | - |
| 784 | | 900 | 399.1 | 900399.1 | ARO General Plant-1 | - | - | - | - |
| 785 | | | | | | | | | |
| 786 | **Total Accumulated Reserve Corporate Plant** | | | | | 221,583,101 | 225,415,104 | 226,815,229 | 230,650,439 |
| 787 | | | | | | | | | |
| 788 | **Total Electric Plant In Service - with Corporate** | | 101/106 | | | 3,085,139,635 | 3,108,997,012 | 3,125,635,936 | 3,149,683,633 |
| 790 | **Electric Plant Purchased - with Corporate** | | 102 | | | - | - | - | - |
| 792 | **Electric Plant Acq. Adj. - with Corporate** | | 114 | | | - | - | - | - |
| 793 | | | | | | | | | |
| 794 | **Total Electric Plant - with Corporate** | | | | | 3,085,139,635 | 3,108,997,012 | 3,125,635,936 | 3,149,683,633 |

| | A | B | C | D | E | BC | BD | BE |
|---|---|---|---|---|---|---|---|---|
| 1 | **Public Service Company of New Mexico** | | | | | | | |
| 2 | **Schedule C-1 a** | | | | | | | |
| 3 | **Accumulated Provision for Depreciation and Amortization by Functional Classification** | | | | | | | |
| 4 | **Base Period Ending 6/30/2026** | | | | | | | |
| 5 | **Test Period Ending 9/30/2028** | | | | | | | |
| 6 | Link to WP Plant Lead Sheet | | | | | | | |
| 7 | Base Period data is historical Information from the Company's Books and Records. | | | | | | | |
| 8 | **This schedule is sponsored by PNM Witness Gutierrez** | | | | | | | |
| 9 | Please see the Direct Testimony of PNM Witness Gutierrez for discussion of adjustments/changes to the Base Period, Test Period, and Linkage Data. | | | | | | | |
| 10 | **Description** | **Location Number Note 6** | **FERC** | **Loc/FERC** | **FERC Description** | **Balance 9/1/28** | **Test Period Ending Balance 9/30/28** | **Shared Service Allocation Note 4** |
| 11 | | | | | | | | |
| 12 | **Accumulated Depreciation Production Plant** | | | | | | | |
| 13 | **Steam Production** | | | | | | | |
| 56 | **All - Steam** | | | | | | | |
| 57 | | | 310 | | Land and Land Rights | - | - | - |
| 58 | | | 310.1 | | Land Right of Way | 19,025 | 19,053 | - |
| 59 | | | 311 | | Structures & Improvements | 7,754,946 | 7,774,209 | - |
| 60 | | | 312 | | Boiler Plant Equipment | 93,509,232 | 93,478,356 | - |
| 61 | | | 314 | | Turbogenerator Units | 40,283,746 | 40,379,455 | - |
| 62 | | | 315 | | Accessory Electric Equipment | 10,959,593 | 10,975,485 | - |
| 63 | | | 315.01 | | Computer Hardware | - | - | - |
| 64 | | | 315.02 | | Computer Software | 1,067,766 | 1,082,857 | - |
| 65 | | | 315.03 | | Communication Equipment | 241,806 | 243,735 | - |
| 66 | | | 316 | | Misc Power Plant Equipment | 6,191,365 | 6,209,520 | - |
| 67 | | | 317 | | Asset Retirement Costs - Steam | 3,531,930 | 3,522,440 | - |
| 68 | **Total Steam Production Accumulated Reserve** | | | | | 163,559,409 | 163,685,111 | - |
| 69 | | | | | | | | |
| 70 | | | | | | | | |
| 71 | **Nuclear Production** | | | | | | | |
| 129 | **All - Nuclear** | | | | | | | |
| 130 | | | 320 | | Land and Land Rights | 0 | 0 | - |
| 131 | | | 320.1 | | Land - Right of Way | 31,408 | 31,467 | - |
| 132 | | | 321 | | Structures and Improvements | 121,645,518 | 122,062,821 | - |
| 133 | | | 322 | | Reactor Plant Equipment | 190,803,664 | 191,504,758 | - |
| 134 | | | 323 | | Turbogenerator Units | 66,775,068 | 66,983,160 | - |
| 135 | | | 324 | | Accessory Electric Equipment | 45,492,448 | 45,563,177 | - |
| 136 | | | 324.01 | | Computer Hardware | - | - | - |
| 137 | | | 324.02 | | Computer Software | 8,218,323 | 8,432,393 | - |
| 138 | | | 324.03 | | Communication Equipment | 238,955 | 243,025 | - |
| 139 | | | 325 | | Misc Power Plant Equipment | 42,162,694 | 42,348,545 | - |
| 140 | | | 326 | | Asset Retirement Costs Nuclear Prod Plant | 290,807 | 301,992 | - |
| 141 | **Total Nuclear Production Accumulated Reserve** | | | | | 475,658,886 | 477,471,338 | - |
| 142 | | | | | | | | |
| 143 | | | | | | | | |

| | A | B | C | D | E | BC | BD | BE |
|---|---|---|---|---|---|---|---|---|
| 1 | **Public Service Company of New Mexico** | | | | | | | |
| 2 | **Schedule C-1 a** | | | | | | | |
| 3 | **Accumulated Provision for Depreciation and Amortization by Functional Classification** | | | | | | | |
| 4 | **Base Period Ending 6/30/2026** | | | | | | | |
| 5 | **Test Period Ending 9/30/2028** | | | | | | | |
| 6 | Link to WP Plant Lead Sheet | | | | | | | |
| 7 | Base Period data is historical Information from the Company's Books and Records. | | | | | | | |
| 8 | **This schedule is sponsored by PNM Witness Gutierrez** | | | | | | | |
| 9 | Please see the Direct Testimony of PNM Witness Gutierrez for discussion of adjustments/changes to the Base Period, Test Period, and Linkage Data. | | | | | | | |
| 10 | **Description** | **Location Number Note 6** | **FERC** | **Loc/FERC** | **FERC Description** | **Balance 9/1/28** | **Test Period Ending Balance 9/30/28** | **Shared Service Allocation Note 4** |
| 144 | **Solar Production** | | | | | | | |
| 237 | **All - Solar** | | | | | | | |
| 238 | | | 338.01 | | Land & Land Rights | - | - | - |
| 239 | | | 338.02 | | Structures and Improvements | 132,426 | 133,188 | - |
| 240 | | | 338.04 | | Solar Panels | 133,024,081 | 134,250,633 | - |
| 241 | | | 338.05 | | Collector System | 2,799,185 | 2,825,402 | - |
| 242 | | | 338.07 | | Solar Inverters | 946,511 | 1,006,746 | - |
| 243 | | | 338.08 | | Other Accessory Electrical Equipment | 13,689,268 | 13,758,267 | - |
| 244 | | | 338.09 | | Computer Hardware | 34,155 | 34,986 | - |
| 245 | | | 338.10 | | Computer Software | - | - | - |
| 246 | | | 338.11 | | Communication Equipment | 259,097 | 262,073 | - |
| 247 | | | 338.12 | | Misc. Power Plant Equipment | 2,216,148 | 2,229,977 | - |
| 248 | **Total Solar Production Accumulated Reserve** | | | | | 153,100,871 | 154,501,271 | - |
| 249 | | | | | | | | |
| 250 | **Other Production** | | | | | | | |
| 251 | | | | | | | | |
| 252 | **Other Production - Gas:** | | | | | | | |
| 339 | **All - Gas** | | 340 | | Land and Land Rights | - | - | - |
| 340 | | | 340.1 | | Land - Right of Way | 907,141 | 913,428 | - |
| 341 | | | 341 | | Structures and Improvements | 47,432,214 | 47,636,415 | - |
| 342 | | | 342 | | Fuel Holders, Producers, Accessories | 64,909,125 | 65,295,978 | - |
| 343 | | | 343 | | Prime Movers | - | - | - |
| 344 | | | 344 | | Generators | 112,217,251 | 113,088,752 | - |
| 345 | | | 345 | | Accessory Electric Equipment | 10,546,424 | 10,661,498 | - |
| 346 | | | 345.01 | | Computer Hardware | (4,487) | (4,487) | - |
| 347 | | | 345.02 | | Computer Software | 57,682 | 57,682 | - |
| 348 | | | 345.03 | | Communication Equipment | 10,943 | 11,158 | - |
| 349 | | | 346 | | Misc Power Plant Equipment | 13,486,049 | 13,648,037 | - |
| 350 | | | 347 | | Asset Retirement Costs - Other Production | 1,836,677 | 1,862,150 | - |
| 351 | **Total Other Production Plant - Gas** | | | | | 251,399,018 | 253,170,611 | - |
| 352 | | | | | | | | |
| 353 | | | | | | | | |
| 354 | **Total Other Production Accumulated Reserve** | | | | | 404,499,889 | 407,671,883 | - |

| | A | B | C | D | E | BC | BD | BE |
|---|---|---|---|---|---|---|---|---|
| 1 | **Public Service Company of New Mexico** | | | | | | | |
| 2 | **Schedule C-1 a** | | | | | | | |
| 3 | **Accumulated Provision for Depreciation and Amortization by Functional Classification** | | | | | | | |
| 4 | **Base Period Ending 6/30/2026** | | | | | | | |
| 5 | **Test Period Ending 9/30/2028** | | | | | | | |
| 6 | Link to WP Plant Lead Sheet | | | | | | | |
| 7 | Base Period data is historical Information from the Company's Books and Records. | | | | | | | |
| 8 | **This schedule is sponsored by PNM Witness Gutierrez** | | | | | | | |
| 9 | Please see the Direct Testimony of PNM Witness Gutierrez for discussion of adjustments/changes to the Base Period, Test Period, and Linkage Data. | | | | | | | |
| 10 | **Description** | **Location Number Note 6** | **FERC** | **Loc/FERC** | **FERC Description** | **Balance 9/1/28** | **Test Period Ending Balance 9/30/28** | **Shared Service Allocation Note 4** |
| 355 | | | | | | | | |
| 356 | **Total Accumulated Reserve Production** | | | | | 1,043,718,184 | 1,048,828,331 | - |
| 357 | | | | | | | | |
| 358 | | | | | | | | |
| 359 | **Accumulated Energy Storage Plant** | | | | | | | |
| 386 | **All - Energy Storage** | | 387.01 | 387.01 | Land & Land Rights | - | - | - |
| 387 | | | 387.02 | 387.02 | Structures & Improvements | 2,044,694 | 2,146,670 | - |
| 388 | | | 387.03 | 387.03 | Energy Storage Equipment | 16,033,765 | 16,871,176 | - |
| 389 | | | 387.05 | 387.05 | Collector System | 2,419,250 | 2,531,993 | - |
| 390 | | | 387.06 | 387.06 | Generator Step-Up Transformers (GSU) | 5,218,883 | 5,479,142 | - |
| 391 | | | 387.07 | 387.07 | Inverters | - | - | - |
| 392 | | | 387.08 | 387.08 | Computer Hardware | 2,141,548 | 2,214,685 | - |
| 393 | | | 387.09 | 387.09 | Computer Software | 582,590 | 595,458 | - |
| 394 | | | 387.10 | 387.10 | Communication Equipment | 152,618 | 160,233 | - |
| 395 | | | 387.11 | 387.11 | Misc. Energy Storage Equipment | 2,567,977 | 2,612,224 | - |
| 396 | | | 387.12 | 387.12 | Asset Retirement Costs for Energy Storage | - | - | - |
| 397 | **Total Energy Storage Plant** | | | | | 31,161,327 | 32,611,580 | - |
| 398 | | | | | | | | |
| 399 | | | | | | | | |
| 400 | **Accumulated Reserve Transmission Plant** | | | | | | | |
| 453 | **All - Transmission** | | | | | | | |
| 454 | | | 350 | | Land and Land Rights | 6,143,020 | 6,128,668 | - |
| 455 | | | 350.1 | | Land - Right of Way | 26,981,282 | 27,024,114 | - |
| 456 | | | 351.01 | | Computer Hardware | 11,578,618 | 11,984,017 | - |
| 457 | | | 351.02 | | Computer Software | 7,806,320 | 7,948,093 | - |
| 458 | | | 351.03 | | Communication Equipment | 21,816,639 | 22,094,128 | - |
| 459 | | | 352 | | Structures and Improvements | 34,857,201 | 35,127,582 | - |
| 460 | | | 353 | | Station Equipment | 282,111,520 | 284,211,825 | - |
| 461 | | | 353.1 | | Station Equipment - Step-up Xfmr and Aux | 7,262,446 | 7,287,290 | - |
| 462 | | | 354 | | Towers and Fixtures | 48,902,286 | 48,940,496 | - |
| 463 | | | 355 | | Poles and Fixtures | 174,956,074 | 176,343,691 | - |
| 464 | | | 356 | | Overhead Conductors and Devices | 113,606,820 | 114,062,128 | - |
| 465 | | | 357 | | Underground Conduit | 26,984 | 28,681 | - |
| 466 | | | 359 | | Roads and Trails | 3,384,318 | 3,396,579 | - |
| 467 | **Total Accumulated Reserve Transmission Plant** | | | | | 739,433,528 | 744,577,293 | - |
| 468 | | | | | | | | |
| 469 | | | | | | | | |

| | A | B | C | D | E | BC | BD | BE |
|---|---|---|---|---|---|---|---|---|
| 1 | **Public Service Company of New Mexico** | | | | | | | |
| 2 | **Schedule C-1 a** | | | | | | | |
| 3 | **Accumulated Provision for Depreciation and Amortization by Functional Classification** | | | | | | | |
| 4 | **Base Period Ending 6/30/2026** | | | | | | | |
| 5 | **Test Period Ending 9/30/2028** | | | | | | | |
| 6 | Link to WP Plant Lead Sheet | | | | | | | |
| 7 | Base Period data is historical Information from the Company's Books and Records. | | | | | | | |
| 8 | **This schedule is sponsored by PNM Witness Gutierrez** | | | | | | | |
| 9 | Please see the Direct Testimony of PNM Witness Gutierrez for discussion of adjustments/changes to the Base Period, Test Period, and Linkage Data. | | | | | | | |
| 10 | **Description** | **Location Number Note 6** | **FERC** | **Loc/FERC** | **FERC Description** | **Balance 9/1/28** | **Test Period Ending Balance 9/30/28** | **Shared Service Allocation Note 4** |
| 470 | | | | | | | | |
| 471 | **Accumulated Reserve Distribution Plant** | | | | | | | |
| 665 | **All - Distribution** | | | | | | | |
| 666 | | | 360 | | Land and Land Rights | 216,986 | (10,211) | - |
| 667 | | | 360.1 | | Land - Right of Way | 1,189,798 | 1,147,744 | - |
| 668 | | | 361 | | Structures and Improvements | 14,604,846 | 14,492,904 | - |
| 669 | | | 362 | | Station Equipment | 120,779,014 | 120,936,304 | - |
| 670 | | | 363.01 | | Computer Hardware | 7,745,663 | 8,225,871 | - |
| 671 | | | 363.02 | | Computer Software | 35,690,713 | 36,644,572 | - |
| 672 | | | 363.03 | | Communication Equipment | 7,730,456 | 7,956,016 | - |
| 673 | | | 364 | | Poles, Towers and Fixtures | 127,886,503 | 129,263,790 | - |
| 674 | | | 365 | | Overhead Conductors and Devices | 132,680,500 | 133,472,046 | - |
| 675 | | | 366 | | Underground Conduit | 79,057,599 | 79,157,377 | - |
| 676 | | | 367 | | Underground Conductors and Devices | 160,856,629 | 160,850,103 | - |
| 677 | | | 368 | | Line Transformers | 138,291,583 | 138,836,368 | - |
| 678 | | | 369 | | Services | 59,330,206 | 59,665,058 | - |
| 679 | | | 369.1 | | Services - Underground | 95,924,190 | 96,596,748 | - |
| 680 | | | 370 | | Meters | 16,974,082 | 17,001,090 | - |
| 681 | | | 370.4 | | Meters - Grid Mod | (1,109,494) | (906,246) | - |
| 682 | | | 371 | | Installations on Customers' Premises | 9,016,484 | 9,031,747 | - |
| 683 | | | 371.1 | | Leased Flood Lighting | 279,385 | 279,715 | - |
| 684 | | | 373 | | Street Lighting and Signal Systems | 13,858,176 | 13,914,322 | - |
| 685 | | | 374 | | Asset Retirement Costs - Distribution | - | - | - |
| 686 | **Total Accumulated Reserve Distribution Plant** | | | | | 1,021,003,322 | 1,026,555,319 | - |
| 687 | | | | | | | | |
| 688 | | | | | | | | |

| | A | B | C | D | E | BC | BD | BE |
|---|---|---|---|---|---|---|---|---|
| 1 | **Public Service Company of New Mexico** | | | | | | | |
| 2 | **Schedule C-1 a** | | | | | | | |
| 3 | **Accumulated Provision for Depreciation and Amortization by Functional Classification** | | | | | | | |
| 4 | **Base Period Ending 6/30/2026** | | | | | | | |
| 5 | **Test Period Ending 9/30/2028** | | | | | | | |
| 6 | Link to WP Plant Lead Sheet | | | | | | | |
| 7 | Base Period data is historical Information from the Company's Books and Records. | | | | | | | |
| 8 | **This schedule is sponsored by PNM Witness Gutierrez** | | | | | | | |
| 9 | Please see the Direct Testimony of PNM Witness Gutierrez for discussion of adjustments/changes to the Base Period, Test Period, and Linkage Data. | | | | | | | |
| 10 | **Description** | **Location Number Note 6** | **FERC** | **Loc/FERC** | **FERC Description** | **Balance 9/1/28** | **Test Period Ending Balance 9/30/28** | **Shared Service Allocation Note 4** |
| 689 | **Gross Plant G&I Plant (303,389-399)** | | | | | | | |
| 719 | **Total General & Intangible Plant** | | | | | | | |
| 720 | | | 303 | | Miscellaneous Intangible Plant | - | - | - |
| 721 | | | 389 | | Land and Land Rights | - | - | - |
| 722 | | | 390 | | Structures and Improvements | 31,288,418 | 31,304,551 | - |
| 723 | | | 390.1 | | Bulk Power Office Building Remodeling | 5,697,413 | 5,696,539 | - |
| 724 | | | 390.2 | | Bulk Power Office Building | 5,859,583 | 5,860,806 | - |
| 725 | | | 391 | | Office Furniture and Equipment | 3,093,826 | 3,105,575 | - |
| 726 | | | 391.1 | | Office Furniture and Equipment - PC System | - | - | - |
| 727 | | | 391.2 | | Office Furniture and Equipment - PC's | - | - | - |
| 728 | | | 391.3 | | Computer Hardware | - | - | - |
| 729 | | | 391.5 | | Computer Hardware - Solar | - | - | - |
| 730 | | | 391.7 | | Computer Hardware | - | - | - |
| 731 | | | 392 | | Transportation Equipment - Light | 2,612,809 | 2,641,847 | - |
| 732 | | | 392.1 | | Transportation Equipment - Heavy | 3,380,652 | 3,372,211 | - |
| 733 | | | 392.2 | | Transportation Equipment - Trailers | 3,989,502 | 4,007,488 | - |
| 734 | | | 392.4 | | Transportation Equipment - Leaseback | - | - | - |
| 735 | | | 393 | | Stores Equipment | 89,602 | 89,933 | - |
| 736 | | | 394 | | Tools, Shop & Garage Equipment | 9,922,994 | 9,993,205 | - |
| 737 | | | 395 | | Laboratory Equipment | 146,930 | 146,989 | - |
| 738 | | | 396 | | Power Operated Equipment | 4,670,250 | 4,698,802 | - |
| 739 | | | 397.01 | | Computer Hardware | 617,902 | 629,725 | - |
| 740 | | | 397.02 | | Computer Software | 30,606,092 | 31,068,525 | - |
| 741 | | | 397.03 | | Communication Equipment | - | - | - |
| 742 | | | 398 | | Miscellaneous Equipment | 1,310,536 | 1,321,086 | - |
| 743 | | | 399.1 | | ARO General Plant-1 | 17,183 | 17,209 | - |
| 744 | **Total Accumulated Reserve G&I Plant - PNM** | | | | | 103,303,691 | 103,954,492 | - |
| 745 | | | | | | | | |
| 746 | **Total Electric Plant In Service** | | 101/106 | | | 2,938,620,051 | 2,956,527,016 | - |
| 747 | | | | | | | | |
| 748 | **Electric Plant Purchased** | | 102 | | | | | |
| 749 | | | | | | | | |
| 750 | **Electric Plant Acquisition Adjustment** | | | | Acq. Adj. - Palo Verde Unit 1&2 (Drexel) | - | - | - |
| 751 | | | | | Acq. Adj. - Palo Verde Unit 2 (First Chicago) | - | - | - |
| 752 | | | | | Acq. Adj. - (EIP) | - | - | - |
| 753 | **Electric Plant Acquisition Adjustment** | | 114 | | | - | - | - |
| 754 | | | | | | | | |
| 755 | **Total Electric Plant** | | | | | 2,938,620,051 | 2,956,527,016 | - |
| 756 | | | | | | | | |

| | A | B | C | D | E | BC | BD | BE |
|---|---|---|---|---|---|---|---|---|
| 1 | **Public Service Company of New Mexico** | | | | | | | |
| 2 | **Schedule C-1 a** | | | | | | | |
| 3 | **Accumulated Provision for Depreciation and Amortization by Functional Classification** | | | | | | | |
| 4 | **Base Period Ending 6/30/2026** | | | | | | | |
| 5 | **Test Period Ending 9/30/2028** | | | | | | | |
| 6 | Link to WP Plant Lead Sheet | | | | | | | |
| 7 | Base Period data is historical Information from the Company's Books and Records. | | | | | | | |
| 8 | **This schedule is sponsored by PNM Witness Gutierrez** | | | | | | | |
| 9 | Please see the Direct Testimony of PNM Witness Gutierrez for discussion of adjustments/changes to the Base Period, Test Period, and Linkage Data. | | | | | | | |
| 10 | **Description** | **Location Number Note 6** | **FERC** | **Loc/FERC** | **FERC Description** | **Balance 9/1/28** | **Test Period Ending Balance 9/30/28** | **Shared Service Allocation Note 4** |
| 757 | | | | | | | | |
| 758 | **Corporate Unallocated** | 900 | 303 | 900303 | Miscellaneous Intangible Plant | - | - | - |
| 759 | | 900 | 389 | 900389 | Land and Land Rights | (66,097) | (66,097) | 20,814 |
| 760 | | 900 | 390 | 900390 | Structures and Improvements | 25,094,384 | 25,186,809 | (7,514,882) |
| 761 | | 900 | 390.1 | 900390.1 | Bulk Power Office Building Remodeling | - | - | - |
| 762 | | 900 | 390.2 | 900390.2 | Bulk Power Office Building | - | - | - |
| 763 | | 900 | 391 | 900391 | Office Furniture and Equipment | 484,848 | 494,892 | (156,811) |
| 764 | | 900 | 391.1 | 900391.1 | Office Furniture and Equipment - PC System | - | - | - |
| 765 | | 900 | 391.2 | 900391.2 | Office Furniture and Equipment - PC's | - | - | - |
| 766 | | 900 | 391.3 | 900391.3 | Computer Hardware | - | - | - |
| 767 | | 900 | 391.5 | 900391.5 | Computer Hardware - Solar | - | - | - |
| 768 | | 900 | 391.7 | 900391.7 | Computer Hardware | - | - | - |
| 769 | | 900 | 392 | 900392 | Transportation Equipment - Light | 181,092 | 182,591 | (65,341) |
| 770 | | 900 | 392.1 | 900392.1 | Transportation Equipment - Heavy | 19,678 | 19,889 | (5,863) |
| 771 | | 900 | 392.2 | 900392.2 | Transportation Equipment - Trailers | 7,661 | 7,689 | (2,830) |
| 772 | | 900 | 392.4 | 900392.4 | Transportation Equipment - Leaseback | (326) | (339) | 98 |
| 773 | | 900 | 393 | 900393 | Stores Equipment | - | - | - |
| 774 | | 900 | 394 | 900394 | Tools, Shop & Garage Equipment | 180,055 | 181,875 | (61,106) |
| 775 | | 900 | 395 | 900395 | Laboratory Equipment | - | - | - |
| 776 | | 900 | 396 | 900396 | Power Operated Equipment | 22,807 | 22,867 | (7,088) |
| 777 | | 900 | 397 | 900397 | Communication Equipment | - | - | - |
| 778 | | 900 | 397.01 | 900397.01 | Computer Hardware | 16,287,639 | 16,852,971 | (5,185,218) |
| 779 | | 900 | 397.02 | 900397.02 | Computer Software | 190,193,441 | 193,527,877 | (56,749,962) |
| 780 | | 900 | 397.03 | 900397.03 | Communication Equipment | 2,245,493 | 2,278,142 | (1,216,012) |
| 781 | | 900 | 397.2 | 900397.2 | Communication Equipment | - | - | - |
| 782 | | 900 | 397.3 | 900397.3 | Communication Equipment | - | - | - |
| 783 | | 900 | 398 | 900398 | Miscellaneous Equipment | - | - | - |
| 784 | | 900 | 399.1 | 900399.1 | ARO General Plant-1 | - | - | - |
| 785 | | | | | | | | |
| 786 | **Total Accumulated Reserve Corporate Plant** | | | | | 234,650,674 | 238,689,168 | (70,944,201) |
| 787 | | | | | | | | |
| 788 | **Total Electric Plant In Service - with Corporate** | | 101/106 | | | 3,173,270,725 | 3,195,216,184 | (70,944,201) |
| 790 | **Electric Plant Purchased - with Corporate** | | 102 | | | - | - | - |
| 792 | **Electric Plant Acq. Adj. - with Corporate** | | 114 | | | - | - | - |
| 793 | | | | | | | | |
| 794 | **Total Electric Plant - with Corporate** | | | | | 3,173,270,725 | 3,195,216,184 | (70,944,201) |

| | A | B | C | D | E | BF | BG | BH | BI |
|---|---|---|---|---|---|---|---|---|---|
| 1 | **Public Service Company of New Mexico** | | | | | | | | |
| 2 | **Schedule C-1 a** | | | | | | | | |
| 3 | **Accumulated Provision for Depreciation and Amortization by Functional Classification** | | | | | | | | |
| 4 | **Base Period Ending 6/30/2026** | | | | | | | | |
| 5 | **Test Period Ending 9/30/2028** | | | | | | | | |
| 6 | Link to WP Plant Lead Sheet | | | | | | | | |
| 7 | Base Period data is historical Information from the Company's Books and Records. | | | | | | | | |
| 8 | **This schedule is sponsored by PNM Witness Gutierrez** | | | | | | | | |
| 9 | Please see the Direct Testimony of PNM Witness Gutierrez for discussion of adjustments/changes to the Base Period, Test Period, and Linkage Data. | | | | | | | | |
| 10 | **Description** | **Location Number Note 6** | **FERC** | **Loc/FERC** | **FERC Description** | **Test Period 13 Month Average Adjustment** | **Total Test Period Adjustments** | **Adjusted Test Period Ending Balance 9/30/28** | **Reference** |
| 11 | | | | | | | | | |
| 12 | **Accumulated Depreciation Production Plant** | | | | | | | | |
| 13 | **Steam Production** | | | | | | | | |
| 56 | **All - Steam** | | | | | | | | |
| 57 | | | 310 | | Land and Land Rights | - | - | - | |
| 58 | | | 310.1 | | Land Right of Way | (166) | (166) | 18,887 | |
| 59 | | | 311 | | Structures & Improvements | 68,834 | 68,834 | 7,843,043 | |
| 60 | | | 312 | | Boiler Plant Equipment | 499,535 | 499,535 | 93,977,891 | |
| 61 | | | 314 | | Turbogenerator Units | (382,277) | (382,277) | 39,997,178 | |
| 62 | | | 315 | | Accessory Electric Equipment | (77,163) | (77,163) | 10,898,322 | |
| 63 | | | 315.01 | | Computer Hardware | - | - | - | |
| 64 | | | 315.02 | | Computer Software | (97,308) | (97,308) | 985,549 | |
| 65 | | | 315.03 | | Communication Equipment | (11,577) | (11,577) | 232,158 | |
| 66 | | | 316 | | Misc Power Plant Equipment | (34,259) | (34,259) | 6,175,261 | |
| 67 | | | 317 | | Asset Retirement Costs - Steam | 56,941 | 56,941 | 3,579,381 | |
| 68 | **Total Steam Production Accumulated Reserve** | | | | | 22,558 | 22,558 | 163,707,669 | - |
| 69 | | | | | | | | | |
| 70 | | | | | | | | | |
| 71 | **Nuclear Production** | | | | | | | | |
| 129 | **All - Nuclear** | | | | | | | | |
| 130 | | | 320 | | Land and Land Rights | - | - | 0.0700 | |
| 131 | | | 320.1 | | Land - Right of Way | (349) | (349) | 31,117 | |
| 132 | | | 321 | | Structures and Improvements | (2,380,905) | (2,380,905) | 119,681,916 | |
| 133 | | | 322 | | Reactor Plant Equipment | (3,647,408) | (3,647,408) | 187,857,350 | |
| 134 | | | 323 | | Turbogenerator Units | (1,250,840) | (1,250,840) | 65,732,320 | |
| 135 | | | 324 | | Accessory Electric Equipment | (424,662) | (424,662) | 45,138,515 | |
| 136 | | | 324.01 | | Computer Hardware | - | - | - | |
| 137 | | | 324.02 | | Computer Software | (1,211,202) | (1,211,202) | 7,221,192 | |
| 138 | | | 324.03 | | Communication Equipment | (14,424) | (14,424) | 228,601 | |
| 139 | | | 325 | | Misc Power Plant Equipment | (973,699) | (973,699) | 41,374,846 | |
| 140 | | | 326 | | Asset Retirement Costs Nuclear Prod Plant | (67,109) | (67,109) | 234,883 | |
| 141 | **Total Nuclear Production Accumulated Reserve** | | | | | (9,970,598) | (9,970,598) | 467,500,740 | - |
| 142 | | | | | | | | | |
| 143 | | | | | | | | | |

| | A | B | C | D | E | BF | BG | BH | BI |
|---|---|---|---|---|---|---|---|---|---|
| 1 | **Public Service Company of New Mexico** | | | | | | | | |
| 2 | **Schedule C-1 a** | | | | | | | | |
| 3 | **Accumulated Provision for Depreciation and Amortization by Functional Classification** | | | | | | | | |
| 4 | **Base Period Ending 6/30/2026** | | | | | | | | |
| 5 | **Test Period Ending 9/30/2028** | | | | | | | | |
| 6 | Link to WP Plant Lead Sheet | | | | | | | | |
| 7 | Base Period data is historical Information from the Company's Books and Records. | | | | | | | | |
| 8 | **This schedule is sponsored by PNM Witness Gutierrez** | | | | | | | | |
| 9 | Please see the Direct Testimony of PNM Witness Gutierrez for discussion of adjustments/changes to the Base Period, Test Period, and Linkage Data. | | | | | | | | |
| 10 | **Description** | **Location Number Note 6** | **FERC** | **Loc/FERC** | **FERC Description** | **Test Period 13 Month Average Adjustment** | **Total Test Period Adjustments** | **Adjusted Test Period Ending Balance 9/30/28** | **Reference** |
| 144 | **Solar Production** | | | | | | | | |
| 237 | **All - Solar** | | | | | | | | |
| 238 | | | 338.01 | | Land & Land Rights | - | - | - | |
| 239 | | | 338.02 | | Structures and Improvements | (4,567) | (4,567) | 128,621 | |
| 240 | | | 338.04 | | Solar Panels | (7,354,428) | (7,354,428) | 126,896,205 | |
| 241 | | | 338.05 | | Collector System | (157,304) | (157,304) | 2,668,098 | |
| 242 | | | 338.07 | | Solar Inverters | (361,413) | (361,413) | 645,333 | |
| 243 | | | 338.08 | | Other Accessory Electrical Equipment | (413,997) | (413,997) | 13,344,270 | |
| 244 | | | 338.09 | | Computer Hardware | (4,984) | (4,984) | 30,002 | |
| 245 | | | 338.10 | | Computer Software | - | - | - | |
| 246 | | | 338.11 | | Communication Equipment | (17,860) | (17,860) | 244,214 | |
| 247 | | | 338.12 | | Misc. Power Plant Equipment | (82,969) | (82,969) | 2,147,008 | |
| 248 | **Total Solar Production Accumulated Reserve** | | | | | (8,397,521) | (8,397,521) | 146,103,751 | - |
| 249 | | | | | | | | | |
| 250 | **Other Production** | | | | | | | | |
| 251 | | | | | | | | | |
| 252 | **Other Production - Gas:** | | | | | | | | |
| 339 | **All - Gas** | | 340 | | Land and Land Rights | - | - | - | |
| 340 | | | 340.1 | | Land - Right of Way | (37,725) | (37,725) | 875,703 | |
| 341 | | | 341 | | Structures and Improvements | (1,190,306) | (1,190,306) | 46,446,110 | |
| 342 | | | 342 | | Fuel Holders, Producers, Accessories | (2,271,824) | (2,271,824) | 63,024,155 | |
| 343 | | | 343 | | Prime Movers | - | - | - | |
| 344 | | | 344 | | Generators | (4,606,742) | (4,606,742) | 108,482,010 | |
| 345 | | | 345 | | Accessory Electric Equipment | (661,774) | (661,774) | 9,999,724 | |
| 346 | | | 345.01 | | Computer Hardware | - | - | (4,487) | |
| 347 | | | 345.02 | | Computer Software | (62) | (62) | 57,619 | |
| 348 | | | 345.03 | | Communication Equipment | (1,290) | (1,290) | 9,868 | |
| 349 | | | 346 | | Misc Power Plant Equipment | (951,790) | (951,790) | 12,696,246 | |
| 350 | | | 347 | | Asset Retirement Costs - Other Production | (152,837) | (152,837) | 1,709,313 | |
| 351 | **Total Other Production Plant - Gas** | | | | | (9,874,350) | (9,874,350) | 243,296,261 | - |
| 352 | | | | | | | | | |
| 353 | | | | | | | | | |
| 354 | **Total Other Production Accumulated Reserve** | | | | | (18,271,871) | (18,271,871) | 389,400,012 | - |

| | A | B | C | D | E | BF | BG | BH | BI |
|---|---|---|---|---|---|---|---|---|---|
| 1 | **Public Service Company of New Mexico** | | | | | | | | |
| 2 | **Schedule C-1 a** | | | | | | | | |
| 3 | **Accumulated Provision for Depreciation and Amortization by Functional Classification** | | | | | | | | |
| 4 | **Base Period Ending 6/30/2026** | | | | | | | | |
| 5 | **Test Period Ending 9/30/2028** | | | | | | | | |
| 6 | Link to WP Plant Lead Sheet | | | | | | | | |
| 7 | Base Period data is historical Information from the Company's Books and Records. | | | | | | | | |
| 8 | **This schedule is sponsored by PNM Witness Gutierrez** | | | | | | | | |
| 9 | Please see the Direct Testimony of PNM Witness Gutierrez for discussion of adjustments/changes to the Base Period, Test Period, and Linkage Data. | | | | | | | | |
| 10 | **Description** | **Location Number Note 6** | **FERC** | **Loc/FERC** | **FERC Description** | **Test Period 13 Month Average Adjustment** | **Total Test Period Adjustments** | **Adjusted Test Period Ending Balance 9/30/28** | **Reference** |
| 355 | | | | | | | | | |
| 356 | **Total Accumulated Reserve Production** | | | | | (28,219,910) | (28,219,910) | 1,020,608,421 | - |
| 357 | | | | | | | | | |
| 358 | | | | | | | | | |
| 359 | **Accumulated Energy Storage Plant** | | | | | | | | |
| 386 | **All - Energy Storage** | | 387.01 | 387.01 | Land & Land Rights | - | - | - | |
| 387 | | | 387.02 | 387.02 | Structures & Improvements | (611,852) | (611,852) | 1,534,817 | |
| 388 | | | 387.03 | 387.03 | Energy Storage Equipment | (5,020,532) | (5,020,532) | 11,850,644 | |
| 389 | | | 387.05 | 387.05 | Collector System | (676,458) | (676,458) | 1,855,535 | |
| 390 | | | 387.06 | 387.06 | Generator Step-Up Transformers (GSU) | (1,561,553) | (1,561,553) | 3,917,590 | |
| 391 | | | 387.07 | 387.07 | Inverters | - | - | - | |
| 392 | | | 387.08 | 387.08 | Computer Hardware | (438,825) | (438,825) | 1,775,860 | |
| 393 | | | 387.09 | 387.09 | Computer Software | (77,212) | (77,212) | 518,246 | |
| 394 | | | 387.10 | 387.10 | Communication Equipment | (45,684) | (45,684) | 114,548 | |
| 395 | | | 387.11 | 387.11 | Misc. Energy Storage Equipment | (265,477) | (265,477) | 2,346,747 | |
| 396 | | | 387.12 | 387.12 | Asset Retirement Costs for Energy Storage | - | - | - | |
| 397 | **Total Energy Storage Plant** | | | | | (8,697,594) | (8,697,594) | 23,913,987 | - |
| 398 | | | | | | | | | |
| 399 | | | | | | | | | |
| 400 | **Accumulated Reserve Transmission Plant** | | | | | | | | |
| 453 | **All - Transmission** | | | | | | | | |
| 454 | | | 350 | | Land and Land Rights | 28,733 | 28,733 | 6,157,402 | |
| 455 | | | 350.1 | | Land - Right of Way | (256,852) | (256,852) | 26,767,262 | |
| 456 | | | 351.01 | | Computer Hardware | (2,430,240) | (2,430,240) | 9,553,776 | |
| 457 | | | 351.02 | | Computer Software | (769,772) | (769,772) | 7,178,321 | |
| 458 | | | 351.03 | | Communication Equipment | (925,236) | (925,236) | 21,168,892 | |
| 459 | | | 352 | | Structures and Improvements | (2,482,717) | (2,482,717) | 32,644,865 | |
| 460 | | | 353 | | Station Equipment | (11,837,018) | (11,837,018) | 272,374,807 | |
| 461 | | | 353.1 | | Station Equipment - Step-up Xfmr and Aux | (136,951) | (136,951) | 7,150,339 | |
| 462 | | | 354 | | Towers and Fixtures | (101,944) | (101,944) | 48,838,553 | |
| 463 | | | 355 | | Poles and Fixtures | (8,367,685) | (8,367,685) | 167,976,006 | |
| 464 | | | 356 | | Overhead Conductors and Devices | (2,823,518) | (2,823,518) | 111,238,611 | |
| 465 | | | 357 | | Underground Conduit | (7,714) | (7,714) | 20,967 | |
| 466 | | | 359 | | Roads and Trails | (73,569) | (73,569) | 3,323,010 | |
| 467 | **Total Accumulated Reserve Transmission Plant** | | | | | (30,184,483) | (30,184,483) | 714,392,810 | - |
| 468 | | | | | | | | | |
| 469 | | | | | | | | | |

| | A | B | C | D | E | BF | BG | BH | BI |
|---|---|---|---|---|---|---|---|---|---|
| 1 | **Public Service Company of New Mexico** | | | | | | | | |
| 2 | **Schedule C-1 a** | | | | | | | | |
| 3 | **Accumulated Provision for Depreciation and Amortization by Functional Classification** | | | | | | | | |
| 4 | **Base Period Ending 6/30/2026** | | | | | | | | |
| 5 | **Test Period Ending 9/30/2028** | | | | | | | | |
| 6 | Link to WP Plant Lead Sheet | | | | | | | | |
| 7 | Base Period data is historical Information from the Company's Books and Records. | | | | | | | | |
| 8 | **This schedule is sponsored by PNM Witness Gutierrez** | | | | | | | | |
| 9 | Please see the Direct Testimony of PNM Witness Gutierrez for discussion of adjustments/changes to the Base Period, Test Period, and Linkage Data. | | | | | | | | |
| 10 | **Description** | **Location Number Note 6** | **FERC** | **Loc/FERC** | **FERC Description** | **Test Period 13 Month Average Adjustment** | **Total Test Period Adjustments** | **Adjusted Test Period Ending Balance 9/30/28** | **Reference** |
| 470 | | | | | | | | | |
| 471 | **Accumulated Reserve Distribution Plant** | | | | | | | | |
| 665 | **All - Distribution** | | | | | | | | |
| 666 | | | 360 | | Land and Land Rights | 217,068 | 217,068 | 206,856 | |
| 667 | | | 360.1 | | Land - Right of Way | 21,630 | 21,630 | 1,169,374 | |
| 668 | | | 361 | | Structures and Improvements | (426,280) | (426,280) | 14,066,625 | |
| 669 | | | 362 | | Station Equipment | (2,960,512) | (2,960,512) | 117,975,792 | |
| 670 | | | 363.01 | | Computer Hardware | (2,294,317) | (2,294,317) | 5,931,554 | |
| 671 | | | 363.02 | | Computer Software | (5,424,038) | (5,424,038) | 31,220,534 | |
| 672 | | | 363.03 | | Communication Equipment | 177,440 | 177,440 | 8,133,456 | |
| 673 | | | 364 | | Poles, Towers and Fixtures | (8,634,573) | (8,634,573) | 120,629,217 | |
| 674 | | | 365 | | Overhead Conductors and Devices | (5,236,475) | (5,236,475) | 128,235,571 | |
| 675 | | | 366 | | Underground Conduit | (1,166,090) | (1,166,090) | 77,991,287 | |
| 676 | | | 367 | | Underground Conductors and Devices | (3,114,755) | (3,114,755) | 157,735,349 | |
| 677 | | | 368 | | Line Transformers | (3,251,544) | (3,251,544) | 135,584,825 | |
| 678 | | | 369 | | Services | (1,803,819) | (1,803,819) | 57,861,239 | |
| 679 | | | 369.1 | | Services - Underground | (3,380,248) | (3,380,248) | 93,216,500 | |
| 680 | | | 370 | | Meters | (979,795) | (979,795) | 16,021,295 | |
| 681 | | | 370.4 | | Meters - Grid Mod | (770,631) | (770,631) | (1,676,876) | |
| 682 | | | 371 | | Installations on Customers' Premises | (91,579) | (91,579) | 8,940,167 | |
| 683 | | | 371.1 | | Leased Flood Lighting | (1,984) | (1,984) | 277,732 | |
| 684 | | | 373 | | Street Lighting and Signal Systems | (285,136) | (285,136) | 13,629,186 | |
| 685 | | | 374 | | Asset Retirement Costs - Distribution | - | - | - | |
| 686 | **Total Accumulated Reserve Distribution Plant** | | | | | (39,405,636) | (39,405,636) | 987,149,683 | - |
| 687 | | | | | | | | | |
| 688 | | | | | | | | | |

| | A | B | C | D | E | BF | BG | BH | BI |
|---|---|---|---|---|---|---|---|---|---|
| 1 | **Public Service Company of New Mexico** | | | | | | | | |
| 2 | **Schedule C-1 a** | | | | | | | | |
| 3 | **Accumulated Provision for Depreciation and Amortization by Functional Classification** | | | | | | | | |
| 4 | **Base Period Ending 6/30/2026** | | | | | | | | |
| 5 | **Test Period Ending 9/30/2028** | | | | | | | | |
| 6 | Link to WP Plant Lead Sheet | | | | | | | | |
| 7 | Base Period data is historical Information from the Company's Books and Records. | | | | | | | | |
| 8 | **This schedule is sponsored by PNM Witness Gutierrez** | | | | | | | | |
| 9 | Please see the Direct Testimony of PNM Witness Gutierrez for discussion of adjustments/changes to the Base Period, Test Period, and Linkage Data. | | | | | | | | |
| 10 | **Description** | **Location Number Note 6** | **FERC** | **Loc/FERC** | **FERC Description** | **Test Period 13 Month Average Adjustment** | **Total Test Period Adjustments** | **Adjusted Test Period Ending Balance 9/30/28** | **Reference** |
| 689 | **Gross Plant G&I Plant (303,389-399)** | | | | | | | | |
| 719 | **Total General & Intangible Plant** | | | | | | | | |
| 720 | | | 303 | | Miscellaneous Intangible Plant | - | - | - | |
| 721 | | | 389 | | Land and Land Rights | - | - | - | |
| 722 | | | 390 | | Structures and Improvements | (252,232) | (252,232) | 31,052,319 | |
| 723 | | | 390.1 | | Bulk Power Office Building Remodeling | 5,239 | 5,239 | 5,701,777 | |
| 724 | | | 390.2 | | Bulk Power Office Building | (7,340) | (7,340) | 5,853,466 | |
| 725 | | | 391 | | Office Furniture and Equipment | (69,238) | (69,238) | 3,036,336 | |
| 726 | | | 391.1 | | Office Furniture and Equipment - PC System | - | - | - | |
| 727 | | | 391.2 | | Office Furniture and Equipment - PC's | - | - | - | |
| 728 | | | 391.3 | | Computer Hardware | - | - | - | |
| 729 | | | 391.5 | | Computer Hardware - Solar | - | - | - | |
| 730 | | | 391.7 | | Computer Hardware | - | - | - | |
| 731 | | | 392 | | Transportation Equipment - Light | (168,997) | (168,997) | 2,472,851 | |
| 732 | | | 392.1 | | Transportation Equipment - Heavy | 52,585 | 52,585 | 3,424,796 | |
| 733 | | | 392.2 | | Transportation Equipment - Trailers | (106,587) | (106,587) | 3,900,900 | |
| 734 | | | 392.4 | | Transportation Equipment - Leaseback | - | - | - | |
| 735 | | | 393 | | Stores Equipment | 824 | 824 | 90,757 | |
| 736 | | | 394 | | Tools, Shop & Garage Equipment | (112,905) | (112,905) | 9,880,301 | |
| 737 | | | 395 | | Laboratory Equipment | (358) | (358) | 146,631 | |
| 738 | | | 396 | | Power Operated Equipment | (171,868) | (171,868) | 4,526,935 | |
| 739 | | | 397.01 | | Computer Hardware | (70,812) | (70,812) | 558,913 | |
| 740 | | | 397.02 | | Computer Software | (2,904,228) | (2,904,228) | 28,164,297 | |
| 741 | | | 397.03 | | Communication Equipment | - | - | - | |
| 742 | | | 398 | | Miscellaneous Equipment | (10,243) | (10,243) | 1,310,844 | |
| 743 | | | 399.1 | | ARO General Plant-1 | (158) | (158) | 17,051 | |
| 744 | **Total Accumulated Reserve G&I Plant - PNM** | | | | | (3,816,318) | (3,816,318) | 100,138,174 | |
| 745 | | | | | | | | | |
| 746 | **Total Electric Plant In Service** | | 101/106 | | | (110,323,941) | (110,323,941) | 2,846,203,074 | - |
| 747 | | | | | | | | | |
| 748 | **Electric Plant Purchased** | | 102 | | | | | | |
| 749 | | | | | | | | | |
| 750 | **Electric Plant Acquisition Adjustment** | | | | Acq. Adj. - Palo Verde Unit 1&2 (Drexel) | - | - | - | |
| 751 | | | | | Acq. Adj. - Palo Verde Unit 2 (First Chicago) | - | - | - | |
| 752 | | | | | Acq. Adj. - (EIP) | - | - | - | |
| 753 | **Electric Plant Acquisition Adjustment** | | 114 | | | - | - | - | |
| 754 | | | | | | | | | |
| 755 | **Total Electric Plant** | | | | | (110,323,941) | (110,323,941) | 2,846,203,074 | - |
| 756 | | | | | | | | | |

| | A | B | C | D | E | BF | BG | BH | BI |
|---|---|---|---|---|---|---|---|---|---|
| 1 | **Public Service Company of New Mexico** | | | | | | | | |
| 2 | **Schedule C-1 a** | | | | | | | | |
| 3 | **Accumulated Provision for Depreciation and Amortization by Functional Classification** | | | | | | | | |
| 4 | **Base Period Ending 6/30/2026** | | | | | | | | |
| 5 | **Test Period Ending 9/30/2028** | | | | | | | | |
| 6 | Link to WP Plant Lead Sheet | | | | | | | | |
| 7 | Base Period data is historical Information from the Company's Books and Records. | | | | | | | | |
| 8 | **This schedule is sponsored by PNM Witness Gutierrez** | | | | | | | | |
| 9 | Please see the Direct Testimony of PNM Witness Gutierrez for discussion of adjustments/changes to the Base Period, Test Period, and Linkage Data. | | | | | | | | |
| 10 | **Description** | **Location Number Note 6** | **FERC** | **Loc/FERC** | **FERC Description** | **Test Period 13 Month Average Adjustment** | **Total Test Period Adjustments** | **Adjusted Test Period Ending Balance 9/30/28** | **Reference** |
| 757 | | | | | | | | | |
| 758 | **Corporate Unallocated** | 900 | 303 | 900303 | Miscellaneous Intangible Plant | - | - | - | |
| 759 | | 900 | 389 | 900389 | Land and Land Rights | - | 20,814 | (45,283) | |
| 760 | | 900 | 390 | 900390 | Structures and Improvements | (537,465) | (8,052,347) | 17,134,462 | |
| 761 | | 900 | 390.1 | 900390.1 | Bulk Power Office Building Remodeling | - | - | - | |
| 762 | | 900 | 390.2 | 900390.2 | Bulk Power Office Building | - | - | - | |
| 763 | | 900 | 391 | 900391 | Office Furniture and Equipment | (51,071) | (207,882) | 287,010 | |
| 764 | | 900 | 391.1 | 900391.1 | Office Furniture and Equipment - PC System | - | - | - | |
| 765 | | 900 | 391.2 | 900391.2 | Office Furniture and Equipment - PC's | - | - | - | |
| 766 | | 900 | 391.3 | 900391.3 | Computer Hardware | - | - | - | |
| 767 | | 900 | 391.5 | 900391.5 | Computer Hardware - Solar | - | - | - | |
| 768 | | 900 | 391.7 | 900391.7 | Computer Hardware | - | - | - | |
| 769 | | 900 | 392 | 900392 | Transportation Equipment - Light | (8,996) | (74,337) | 108,254 | |
| 770 | | 900 | 392.1 | 900392.1 | Transportation Equipment - Heavy | (1,269) | (7,133) | 12,757 | |
| 771 | | 900 | 392.2 | 900392.2 | Transportation Equipment - Trailers | (171) | (3,001) | 4,688 | |
| 772 | | 900 | 392.4 | 900392.4 | Transportation Equipment - Leaseback | 78 | 176 | (163) | |
| 773 | | 900 | 393 | 900393 | Stores Equipment | - | - | - | |
| 774 | | 900 | 394 | 900394 | Tools, Shop & Garage Equipment | (10,911) | (72,017) | 109,858 | |
| 775 | | 900 | 395 | 900395 | Laboratory Equipment | - | - | - | |
| 776 | | 900 | 396 | 900396 | Power Operated Equipment | (360) | (7,447) | 15,420 | |
| 777 | | 900 | 397 | 900397 | Communication Equipment | - | - | - | |
| 778 | | 900 | 397.01 | 900397.01 | Computer Hardware | (1,853,837) | (7,039,055) | 9,813,916 | |
| 779 | | 900 | 397.02 | 900397.02 | Computer Software | (19,336,471) | (76,086,432) | 117,441,445 | |
| 780 | | 900 | 397.03 | 900397.03 | Communication Equipment | 952,497 | (263,516) | 2,014,626 | |
| 781 | | 900 | 397.2 | 900397.2 | Communication Equipment | - | - | - | |
| 782 | | 900 | 397.3 | 900397.3 | Communication Equipment | - | - | - | |
| 783 | | 900 | 398 | 900398 | Miscellaneous Equipment | - | - | - | |
| 784 | | 900 | 399.1 | 900399.1 | ARO General Plant-1 | - | - | - | |
| 785 | | | | | | | | | |
| 786 | **Total Accumulated Reserve Corporate Plant** | | | | | (20,847,976) | (91,792,177) | 146,896,991 | |
| 787 | | | | | | | | | |
| 788 | **Total Electric Plant In Service - with Corporate** | | 101/106 | | | (131,171,917) | (202,116,118) | 2,993,100,066 | - |
| 790 | **Electric Plant Purchased - with Corporate** | | 102 | | | - | - | - | |
| 792 | **Electric Plant Acq. Adj. - with Corporate** | | 114 | | | - | - | - | |
| 793 | | | | | | | | | |
| 794 | **Total Electric Plant - with Corporate** | | | | | (131,171,917) | (202,116,118) | 2,993,100,066 | - |

| | A |
|---|---|
| 1 | **Public Service Company of New Mexico** |
| 2 | **Schedule C-1 a (Notes)** |
| 3 | **Accumulated Provision for Depreciation and Amortization by Functional Classification** |
| 4 | Link to WP Plant Lead Sheet |
| 5 | |
| 6 | **Note 1**: This adjustment reflects the imprudence impairment consistent with the final order in NMPRC Case No. 22-00270-UT. For GAAP accounting purposes, this impairment was recorded to FERC Account 116 "Other Electric Plant Adjustments"; however for regulatory purposes, this adjustment is reclassified into FERC Account 101, to properly remove the amounts from rate base. |
| 7 | **Note 2:** The Palo Verde Asset Retirement Costs, recorded in plant in service, are not included in rate base, as final decommissioning of PV are ultimately funded to an external trust, and recovery of decommissioning expense from PNM Retail customers are based on those funding amounts. This treatment is consistent with prior rate cases. |
| 8 | **Note 3**: Adjustment reflects reclassification of capital assets at the end of the Base Period associated with Palo Verde Leased Capacity. Leased Capacity assets approved to be recovered as through regulatory assets have been reclassified to the Regulatory Asset Workpapers. Assets associated with the sale of certain assets to SRP are removed to account for this sale transactions. This adjustment is consistent with the treatment in the Final Order of NMPRC Case No. 22-00270-UT. |
| 9 | **Note 4:** Reflects capital investment on Shared Services that are allocated to subsidiaries other than PNM. See WP Plant - 8, columns T, U and V for Base Period allocation to PNM. The allocation of Shared Services is based on the 13-month average at the end of the Test Period. For the Test Period, the 13-month average was calculated on a total company basis prior to the allocation of assets to PNM. Please refer to WP Plant - 8, columns BA, BB and BC for Test Period allocation to PNM. |
| 10 | **Note 5**: FERC accounts 365 (Overhead Conductors and Devices), 366 (Underground Conduit) and 367 (Underground Conductors and Devices) are allocated between Primary and Secondary System Distribution based on conductor footage study. See WP Plant -1 for allocation percentages. Also see the Direct Testimony of PNM Witness Gray for further discussion on the conductor footage study. This note relates to information grouped within the outline function and is not visible on the printed schedule. |
| 11 | **Note 6**: Information in Column B "Location Number" is utilized to identify the applicable depreciation rates. |
| 12 | **General Notes**: |
| 13 | Please see the Direct Testimonies of PNM Witnesses Gray, Flores-Olivas, Sanchez, Phelps, and Gutierrez for discussion of adjustments/changes to the Base Period, Test Period. |
| 14 | Please see WP Plant - 1a for variance between adjusted Base Period and Test Period balances. |
| 15 | The electronic version of this worksheet uses the Microsoft excel outline function. This function groups the elements of cost, and or columns for print formatting purposes. |

# PNM Schedule C-2

Depreciation rate study

| | A |
|---|---|
| 1 | **Public Service Company of New Mexico** |
| 2 | **Schedule C-2** |
| 3 | **Depreciation Rate Study** |
| 4 | **Base Period Ending 6/30/2026** |
| 5 | **Test Period Ending 9/30/2028** |
| 6 | **This schedule is sponsored by PNM Witness Gutierrez** |
| 7 | |
| 8 | PNM is filing for new depreciation rates in this filing. Please see the Direct Testimony and Exhibits of |
| 9 | PNM Witness Dane Watson. |
| 10 | Please see the Direct Testimony and Exhibits of PNM Witness Dane Watson. |
| 11 | Please see the testimony and Exhibits of PNM Witness Gutierrez for base period and test period depreciation expense. |
| 12 | The test period depreciation expense reflects the new depreciation rates as proposed by PNM Witness Watson. |

# PNM Schedule C-3

Depreciation and amortization methods

| | A |
|---|---|
| 1 | **Public Service Company of New Mexico** |
| 2 | **Schedule C-3** |
| 3 | **Depreciation and Amortization Methods** |
| 4 | **Base Period Ending 6/30/2026** |
| 5 | **Test Period Ending 9/30/2028** |
| 6 | **This schedule is sponsored by PNM Witness Gutierrez** |
| 7 | |
| 8 | PNM is not requesting a change in depreciation methods, formula, or procedures in this proceeding. |
| 9 | Please see the Direct Testimony and Exhibits of PNM Witness Dane Watson. |

Original cost of plant in service adjusted to the cost of reproduction as a going concern and other elements of value

# PNM D Series Schedules

Schedule D-1: Original cost of plant in service adjusted to the cost of reproduction as a going concern and other elements of value

Schedule D-2: Cost of reproduction as a going concern and other elements of value adjusted for age and condition

# PNM Schedule D-1 & D-2

Original cost of plant in service adjusted to the cost of reproduction as a going concern and other elements of value

| | A |
|---|---|
| 1 | **Public Service Company of New Mexico** |
| 2 | **Schedule D-1 and D-2** |
| 3 | **Cost of Reproduction as a Going Concern and Other Elements of Value** |
| 4 | **Base Period Ending 6/30/2026** |
| 5 | **Test Period Ending 7/31/2028** |
| 6 | **This schedule is sponsored by PNM Witness Gutierrez** |
| 7 | |
| 8 | PNM has not provided information in this series because it is not claiming cost of reproduction |
| 9 | as a going concern and other elements of value to support a change in rates |

Working capital allowance

# PNM E Series Schedules

Schedule E-1: Cash working capital allowance

Schedule E-2: Materials and supplies, prepayments, and deferred charges

Schedule E-3: Fuel inventories by plant location

Schedule E-4: Amounts of working capital items charged to operating and maintenance expenses

# PNM Schedule E-1

Cash working capital allowance

| | A | B | C | D | E |
|---|---|---|---|---|---|
| 1 | **Public Service Company of New Mexico** | | | | |
| 2 | **Schedule E-1** | | | | |
| 3 | **Cash Working Capital Allowance - Lead Lag Study** | | | | |
| 4 | **Base Period Ending 6/30/2026** | | | | |
| 5 | **Test Period Ending 9/30/2028** | | | | |
| 6 | **This schedule is sponsored by PNM Witness Gutierrez** | | | | |
| 7 | | | | | |
| 8 | **Description** | **Revenue Lag Days** | **Lead Days** | **(Lead) Lag Days** | **Reference** |
| 9 | | | | | |
| 10 | Fuel: | | | | |
| 11 | Coal | 44.6 | 32.5 | 12.10 | |
| 12 | Nuclear | 0 | 0 | - | |
| 13 | Gas | 44.6 | 42.3 | 2.30 | |
| 14 | 447 Sales | 44.6 | 34.4 | 10.20 | |
| 15 | EDAM | 44.6 | 71.7 | (27.10) | |
| 16 | Economy Purchases | 44.6 | 39.8 | 4.80 | |
| 17 | Contingent Purchases - Energy | 44.6 | 39.8 | 4.80 | |
| 18 | Contingent Purchases - Demand | 44.6 | 39.8 | 4.80 | |
| 19 | | | | | |
| 20 | Four Corners O&M | 44.6 | -0.4 | 45.00 | |
| 21 | Palo Verde O&M | 44.6 | 5.3 | 39.30 | |
| 22 | Palo Verde Lease Payment | 44.6 | 0 | 44.60 | |
| 23 | Transmission | 44.6 | 44.5 | 0.10 | |
| 24 | Management Fee | 44.6 | 30.2 | 14.40 | |
| 25 | Other O&M | 44.6 | 38 | 6.60 | |
| 26 | | | | | |
| 27 | Wages & Salaries | 44.6 | 19.2 | 25.40 | |
| 28 | | | | | |
| 29 | Depreciation & Amortization | | | | |
| 30 | | | | | |
| 31 | Ad Valorem Property Taxes - AZ | 44.6 | 213.5 | (168.90) | |
| 32 | Ad Valorem Property Taxes - NM | 44.6 | 239.3 | (194.70) | |
| 33 | Native American Taxes | 44.6 | 51.4 | (6.80) | |
| 34 | Payroll Taxes | 44.6 | 21.5 | 23.10 | |
| 35 | Misc Taxes Other Than Inc Taxes | 44.6 | 38.8 | 5.80 | |
| 36 | | | | | |
| 37 | Miscellaneous Amortizations | 0 | 0 | - | |
| 38 | | | | | |

| | A | B | C | D | E |
|---|---|---|---|---|---|
| 39 | Return on Rate Base | 0 | 0 | - | |
| 40 | | | | | |
| 41 | Income Taxes - Current: | | | | |
| 42 | Federal Current | 44.6 | 0 | 44.60 | |
| 43 | State and Fed Deferred | 0 | 0 | - | |
| 44 | State Current | 44.6 | 0 | 44.60 | |
| 45 | ITC/Deferred Income Taxes | 0 | 0 | - | |
| 46 | | | | | |
| 47 | Revenue Credits: | | | | |
| 48 | Wheeling | 44.6 | 71.7 | (27.10) | |
| 49 | Rent for Electric Property | 44.6 | 41.9 | 2.70 | |
| 50 | Late Payments | 44.6 | 41.9 | 2.70 | |
| 51 | Special Charges | 44.6 | 41.9 | 2.70 | |
| 52 | Economy Service Customer RC | 44.6 | 39.8 | 4.80 | |
| 53 | Other Revenue Credits | 44.6 | 41.9 | 2.70 | |
| 54 | | | | | |
| 55 | Revenue Taxes I&S Fee | 44.6 | -25.5 | 70.10 | |
| 56 | | | | | |
| 57 | Gross Receipts Tax | 44.6 | 38.7 | 5.90 | |
| 58 | | | | | |
| 59 | Franchise Fees | 44.6 | 46.2 | (1.60) | |
| 60 | | | | | |
| 61 | Notes: | | | | |
| 62 | Please refer to the testimony of PNM Witness Gutierrez for discussion of lead lag study performed. | | | | |
| 63 | Base period data is historical information from the Company's Book Balance Amounts. | | | | |

| | A | B | C | D | E |
|---|---|---|---|---|---|
| 1 | **Public Service Company of New Mexico** | | | | |
| 2 | **Schedule E-1** | | | | |
| 3 | **Cash Working Capital Allowance - Lead Lag Study** | | | | |
| 4 | **Base Period Ending 6/30/2026** | | | | |
| 5 | **Test Period Ending 9/30/2028** | | | | |
| 6 | **This schedule is sponsored by PNM Witness Gutierrez** | | | | |
| 7 | | | | (In Thousands) | |
| 8 | **Category** | **Lead/Lag Days** | **PNM Retail COS** | **Cash Working Capital Calc** | **Reference** |
| 9 | Total Base Fuel, Other Fuel, and Other Purchased Power | | | | |
| 10 | Fuel-Coal | 12.10 | 48,467,404 | 586,456 | PNM Exhibit RNG-3 - WP COS.xlsx; COS BASE, lines 258 + 259 |
| 11 | Fuel-Nuclear | 0.00 | 16,986,674 | - | PNM Exhibit RNG-3 - WP COS.xlsx; COS BASE, lines 260 + 261 |
| 12 | Fuel-Gas | 2.30 | 15,550,914 | 35,767 | PNM Exhibit RNG-3 - WP COS.xlsx; COS BASE, line 262 |
| 13 | Off-System Sales | 10.20 | (73,534,016) | (750,047) | PNM Exhibit RNG-3 - WP COS.xlsx; COS BASE, line 270 |
| 14 | EDAM | -27.10 | (14,316,981) | 387,990 | PNM Exhibit RNG-3 - WP COS.xlsx; COS BASE, line 273 |
| 15 | Purchased Power - Energy | 4.80 | 155,753,716 | 747,618 | PNM Exhibit RNG-3 - WP COS.xlsx; COS BASE, sum of lines 263 - 267 |
| 16 | Total | | 148,907,711 | 1,007,784 | sum of lines 10-15 |
| 17 | | | | | |
| 18 | O & M: | | | | |
| 19 | Four Corners | 45.00 | 22,445,506 | 1,010,048 | Note 1 |
| 20 | Palo Verde | 39.30 | 55,296,313 | 2,173,145 | PNM Exhibit RNG-4 - WP OM - O&M Workpaper.xlsx; WP OM-11, Column V, Line 278, less line 21 |
| 21 | Palo Verde Lease Payment | 44.60 | 53,124 | 2,369 | PNM Exhibit RNG-3 - WP COS.xlsx; COS BASE, line 314 |
| 22 | Transmission | 0.10 | 48,936,513 | 4,894 | PNM Exhibit RNG-3 - WP COS.xlsx; COS BASE, line 367 |
| 23 | Purchased Power - Demand | 4.80 | 115,420,645 | 554,019 | PNM Exhibit RNG-3 - WP COS.xlsx; COS BASE, sum of lines 279 - 286 |
| 24 | Management Fee | 14.40 | 231,875 | 3,339 | PNM Exhibit RNG-3 - WP COS.xlsx; COS BASE, line 288 |
| 25 | Coal Mine Decommissioning | 0.00 | - | - | PNM Exhibit RNG-3 - WP COS.xlsx; COS BASE, line 287 |
| 26 | Other O&M | 6.60 | 137,737,518 | 909,068 | PNM Exhibit RNG-3 - WP COS.xlsx; COS BASE, line 444, less line 28, less the sum of lines 19-26 |
| 27 | Total Non-Fuel O&M | | 380,121,494 | 4,656,882 | |
| 28 | | | | | |
| 29 | Salaries and Wages | 25.40 | 44,882,549 | 1,140,017 | PNM Exhibit RNG-4, WP LA - Labor Workpaper.xlsx; WP-LA-1, Column H, line 468 |
| 30 | | | | | |
| 31 | | | | | |
| 32 | TOTAL O&M (Fuel+Non-Fuel+W&S) | | 573,911,754 | 6,804,682 | Sum of lines 16, 27 and 29 |
| 33 | | | | | |

| | A | B | C | D | E |
|---|---|---|---|---|---|
| 1 | **Public Service Company of New Mexico** | | | | |
| 2 | **Schedule E-1** | | | | |
| 3 | **Cash Working Capital Allowance - Lead Lag Study** | | | | |
| 4 | **Base Period Ending 6/30/2026** | | | | |
| 5 | **Test Period Ending 9/30/2028** | | | | |
| 6 | **This schedule is sponsored by PNM Witness Gutierrez** | | | | |
| 7 | | | | (In Thousands) | |
| 8 | **Category** | **Lead/Lag Days** | **PNM Retail COS** | **Cash Working Capital Calc** | **Reference** |
| 34 | DEPRECIATION EXPENSE: | 0.00 | 221,342,810 | - | PNM Exhibit RNG-3 - WP COS.xlsx; COS BASE, line 494 |
| 35 | | | | | |
| 36 | PROPERTY TAX - AZ | -168.90 | 4,308,344 | (727,679) | PNM Exhibit RNG-3 - WP COS.xlsx; COS BASE, line 501 |
| 37 | PROPERTY TAX - NM | -194.70 | 29,142,466 | (5,674,038) | PNM Exhibit RNG-3 - WP COS.xlsx; COS BASE, line 544 less line 36 |
| 38 | Native American Taxes | -6.80 | 2,490,268 | (16,934) | PNM Exhibit RNG-3 - WP COS.xlsx; COS BASE, sum of lines 561 - 564 |
| 39 | Payroll taxes | 23.10 | 6,787,652 | 156,795 | PNM Exhibit RNG-3 - WP COS.xlsx; COS BASE, line 551 |
| 40 | MISC TAXES OTHER THAN INC: | 5.80 | 2,093,973 | 12,145 | PNM Exhibit RNG-3 - WP COS.xlsx; COS BASE, sum of lines 554 - 560 |
| 41 | Total General Taxes | | 44,822,703 | (6,249,712) | Sum of lines 36-40 |
| 42 | | | | | |
| 43 | | | | | |
| 44 | MISC ALLOWABLE EXP'S: | 0.00 | 21,702,590 | - | PNM Exhibit RNG-3 - WP COS.xlsx; COS BASE, line 606 |
| 45 | | | | | |
| 46 | | | | | |
| 47 | RETURN ON RATE BASE: | 0.00 | 241,790,420 | - | PNM Exhibit RNG-3 - WP COS.xlsx; COS BASE, line 616 |
| 48 | | | | | |
| 49 | | | | | |
| 50 | INCOME TAX: | | | | |
| 51 | Federal Current | 44.60 | 38,436,605 | 1,714,273 | PNM Exhibit RNG-3 - WP COS.xlsx; COS BASE, line 664 |
| 52 | State & Fed Deferred | 0.00 | (18,687,276) | - | PNM Exhibit RNG-3 - WP COS.xlsx; COS BASE, line 666 |
| 53 | State Current | 44.60 | 10,798,856 | 481,629 | PNM Exhibit RNG-3 - WP COS.xlsx; COS BASE, line 688 |
| 54 | Federal Tax adjustments | 0.00 | (1,707,839) | - | PNM Exhibit RNG-3 - WP COS.xlsx; COS BASE, lines 667 + 668 |
| 55 | Total | | 28,840,346 | 2,195,902 | Sum of lines 51-54 |
| 56 | | | | | |

| | A | B | C | D | E |
|---|---|---|---|---|---|
| 1 | **Public Service Company of New Mexico** | | | | |
| 2 | **Schedule E-1** | | | | |
| 3 | **Cash Working Capital Allowance - Lead Lag Study** | | | | |
| 4 | **Base Period Ending 6/30/2026** | | | | |
| 5 | **Test Period Ending 9/30/2028** | | | | |
| 6 | **This schedule is sponsored by PNM Witness Gutierrez** | | | | |
| 7 | | | | (In Thousands) | |
| 8 | **Category** | **Lead/Lag Days** | **PNM Retail COS** | **Cash Working Capital Calc** | **Reference** |
| 57 | | | | | |
| 58 | REVENUE CREDITS: | | | | |
| 59 | Wheeling | -27.10 | (3,272,465) | 88,684 | PNM Exhibit RNG-3 - WP COS.xlsx; COS BASE, sum of lines 708 - 713 |
| 60 | Rent for Electric Property | 2.70 | (4,051,373) | (10,939) | PNM Exhibit RNG-3 - WP COS.xlsx; COS BASE, lines 702 + 703 |
| 61 | Late Payments | 2.70 | (1,331,771) | (3,596) | PNM Exhibit RNG-3 - WP COS.xlsx; COS BASE, line 704 |
| 62 | Special Charges | 2.70 | (2,997,461) | (8,093) | PNM Exhibit RNG-3 - WP COS.xlsx; COS BASE, sum of lines 705 - 707 |
| 63 | Economy Service Customer RC | 4.80 | (3,380,255) | (16,225) | PNM Exhibit RNG-3 - WP COS.xlsx; COS BASE, line 714 |
| 64 | Other Revenue Credits | 2.70 | (12,720,103) | (34,344) | PNM Exhibit RNG-3 - WP COS.xlsx; COS BASE, line 701 + 715 + 716 |
| 65 | Total | | (27,753,428) | 15,487 | Sum of lines 59-64 |
| 66 | | | | | |
| 67 | Sub-total | | 1,104,657,196 | 2,766,359 | Sum of lines 32-40 + line 65 + line 55 + line 47 + line 44 |
| 68 | | | | | |
| 69 | Revenue Taxes - I&S Fee | 70.10 | 6,517,477 | 456,875 | PNM Exhibit RNG-3 - WP COS.xlsx; COS BASE, line 723 |
| 70 | | | | | |
| 71 | TOTAL COST OF SERVICE: | | 1,111,174,673 | 3,223,234 | Sum of lines 67 + 69 |
| 72 | | | | | |
| 73 | Franchise Fees | -1.60 | 27,834,992 | (44,536) | Line 71 * 88.83% * 2.82% (Note 2) |
| 74 | Gross Receipts Tax | 5.90 | 72,991,375 | 430,649 | Line 71 * 87.12% * 7.54% (Note 2) |
| 75 | | | | | |
| 76 | Net NMPRC Dollar Days | | | 3,609,347 | Sum of lines 71 - 74 |
| 77 | | | | | |
| 78 | | | | | |
| 79 | WORKING CAPITAL ALLOWANCE: | | | 3,609,347 | PNM Exhibit RNG-3 Base Adj, line 245 |
| 80 | | | | | |
| 81 | Notes: | | | | |
| 82 | Note 1: Four Corners O&M is based on Company's books and records, adjusted for removal of base period planned outage costs as reflected in PNM Exhibit RNG-4 WP OM-3. | | | | |
| 83 | Note 2: 88.83% (franchise fees) and 87.12% (gross receipts tax) of revenues are subject to taxes. Of the 88.83% for franchise fees, 2.82% is the franchise fee rate of which how much is payable by PNM. The 7.54% is the weighted average gross receipts tax rate on the 87.12% for gross receipts tax. | | | | |
| 84 | Base period data is historical information from the Company's Book Balance Amounts. | | | | |

| | A | B | C | D | E |
|---|---|---|---|---|---|
| 1 | **Public Service Company of New Mexico** | | | | |
| 2 | **Schedule E-1** | | | | |
| 3 | **Cash Working Capital Allowance - Lead Lag Study** | | | | |
| 4 | **Base Period Ending 6/30/2026** | | | | |
| 5 | **Test Period Ending 9/30/2028** | | | | |
| 6 | **This schedule is sponsored by PNM Witness Gutierrez** | | | | |
| 7 | | | | (In Thousands) | |
| 8 | **Category** | **Lead/Lag Days** | **PNM Retail COS** | **Cash Working Capital Calc** | **Reference** |
| 9 | Total Base Fuel, Other Fuel, and Other Purchased Power | | | | |
| 10 | Fuel-Coal | 12.10 | 75,025,836 | 907,813 | PNM Exhibit RNG-3 - WP COS.xlsx; COS Test, lines 258 + 259 |
| 11 | Fuel-Nuclear | 0.00 | 20,172,910 | - | PNM Exhibit RNG-3 - WP COS.xlsx; COS Test, lines 260 + 261 |
| 12 | Fuel-Gas | 2.30 | 67,002,028 | 154,105 | PNM Exhibit RNG-3 - WP COS.xlsx; COS Test, line 262 |
| 13 | Off-System Sales | 10.20 | (157,867,723) | (1,610,251) | PNM Exhibit RNG-3 - WP COS.xlsx; COS Test, line 270 |
| 14 | EDAM | -27.10 | (25,600,000) | 693,760 | PNM Exhibit RNG-3 - WP COS.xlsx; COS Test, line 273 |
| 15 | Purchased Power - Energy | 4.80 | 155,405,270 | 745,945 | PNM Exhibit RNG-3 - WP COS.xlsx; COS Test, sum of lines 263 - 267 |
| 16 | Total | | 134,138,322 | 891,372 | sum of lines 10-15 |
| 17 | | | | | |
| 18 | O & M: | | | | |
| 19 | Four Corners | 45.00 | 23,813,294 | 1,071,598 | Note 1 |
| 20 | Palo Verde | 39.30 | 58,636,785 | 2,304,426 | PNM Exhibit RNG-4 - WP OM - O&M Workpaper.xlsx; WP OM-11, Column AJ, Line 278, less line 21 |
| 21 | Palo Verde Lease Payment | 44.60 | 56,360 | 2,514 | PNM Exhibit RNG-3 - WP COS.xlsx; COS Test, line 314 |
| 22 | Transmission | 0.10 | 53,401,457 | 5,340 | PNM Exhibit RNG-3 - WP COS.xlsx; COS Test, line 365 |
| 23 | Purchased Power - Demand | 4.80 | 170,708,703 | 819,402 | PNM Exhibit RNG-3 - WP COS.xlsx; COS Test, sum of lines 279 - 286 |
| 24 | Management Fee | 14.40 | 158,441 | 2,282 | PNM Exhibit RNG-3 - WP COS.xlsx; COS Test, line 288 |
| 25 | Coal Mine Decommissioning | 0.00 | - | - | PNM Exhibit RNG-3 - WP COS.xlsx; COS Test, line 287 |
| 26 | Other O&M | 6.60 | 238,210,118 | 1,572,187 | PNM Exhibit RNG-3 - WP COS.xlsx; COS Test, line 444, less line 28, less the sum of lines 19-26 |
| 27 | Total Non-Fuel O&M | | 544,985,157 | 5,777,748 | |
| 28 | | | | | |
| 29 | Salaries and Wages | 25.40 | 51,408,162 | 1,305,767 | PNM Exhibit RNG-4, WP LA - Labor Workpaper.xlsx; WP-LA-1, Column K, line 468 |
| 30 | | | | | |
| 31 | | | | | |
| 32 | TOTAL O&M (Fuel+Non-Fuel+W&S) | | 730,531,641 | 7,974,887 | Sum of lines 16, 27 and 29 |
| 33 | | | | | |

| | A | B | C | D | E |
|---|---|---|---|---|---|
| 1 | **Public Service Company of New Mexico** | | | | |
| 2 | **Schedule E-1** | | | | |
| 3 | **Cash Working Capital Allowance - Lead Lag Study** | | | | |
| 4 | **Base Period Ending 6/30/2026** | | | | |
| 5 | **Test Period Ending 9/30/2028** | | | | |
| 6 | **This schedule is sponsored by PNM Witness Gutierrez** | | | | |
| 7 | | | | (In Thousands) | |
| 8 | **Category** | **Lead/Lag Days** | **PNM Retail COS** | **Cash Working Capital Calc** | **Reference** |
| 34 | DEPRECIATION EXPENSE: | 0.00 | 264,866,450 | - | PNM Exhibit RNG-3 - WP COS.xlsx; COS Test, line 492 |
| 35 | | | | | |
| 36 | PROPERTY TAX - AZ | -168.90 | 3,602,861 | (608,523) | PNM Exhibit RNG-3 - WP COS.xlsx; COS Test, line 499 |
| 37 | PROPERTY TAX - NM | -194.70 | 36,147,880 | (7,037,992) | PNM Exhibit RNG-3 - WP COS.xlsx; COS Test, line 542 less line 36 |
| 38 | Native American Taxes | -6.80 | 2,683,812 | (18,250) | PNM Exhibit RNG-3 - WP COS.xlsx; COS Test, sum of lines 559-562 |
| 39 | Payroll taxes | 23.10 | 8,325,986 | 192,330 | PNM Exhibit RNG-3 - WP COS.xlsx; COS Test, line 549 |
| 40 | MISC TAXES OTHER THAN INC: | 5.80 | 2,264,887 | 13,136 | PNM Exhibit RNG-3 - WP COS.xlsx; COS Test, sum of lines 552-558 |
| 41 | Total General Taxes | | 53,025,427 | (7,459,299) | Sum of lines 36-40 |
| 42 | | | | | |
| 43 | | | | | |
| 44 | MISC ALLOWABLE EXP'S: | 0.00 | 30,957,182 | - | PNM Exhibit RNG-3 - WP COS.xlsx; COS Test, line 604 |
| 45 | | | | | |
| 46 | | | | | |
| 47 | RETURN ON RATE BASE: | 0.00 | 316,615,179 | - | PNM Exhibit RNG-3 - WP COS.xlsx; COS Test, line 614 |
| 48 | | | | | |
| 49 | | | | | |
| 50 | INCOME TAX: | | | | |
| 51 | Federal Current | 44.60 | 44,660,151 | 1,991,843 | PNM Exhibit RNG-3 - WP COS.xlsx; COS Test, line 662 |
| 52 | State & Fed Deferred | 0.00 | (9,208,634) | - | PNM Exhibit RNG-3 - WP COS.xlsx; COS Test, line 664 |
| 53 | State Current | 44.60 | 12,547,376 | 559,613 | PNM Exhibit RNG-3 - WP COS.xlsx; COS Test, line 686 |
| 54 | Federal Tax adjustments | 0.00 | (14,751,091) | - | PNM Exhibit RNG-3 - WP COS.xlsx; COS Test, lines 665 + 666 |
| 55 | Total | | 33,247,801 | 2,551,456 | Sum of lines 51-54 |
| 56 | | | | | |
| 57 | | | | | |

| | A | B | C | D | E |
|---|---|---|---|---|---|
| 1 | **Public Service Company of New Mexico** | | | | |
| 2 | **Schedule E-1** | | | | |
| 3 | **Cash Working Capital Allowance - Lead Lag Study** | | | | |
| 4 | **Base Period Ending 6/30/2026** | | | | |
| 5 | **Test Period Ending 9/30/2028** | | | | |
| 6 | **This schedule is sponsored by PNM Witness Gutierrez** | | | | |
| 7 | | | | (In Thousands) | |
| 8 | **Category** | **Lead/Lag Days** | **PNM Retail COS** | **Cash Working Capital Calc** | **Reference** |
| 58 | REVENUE CREDITS: | | | | |
| 59 | Wheeling | -27.10 | (3,449,813) | 93,490 | PNM Exhibit RNG-3 - WP COS.xlsx; COS Test, sum of lines 706-711 |
| 60 | Rent for Electric Property | 2.70 | (4,296,261) | (11,600) | PNM Exhibit RNG-3 - WP COS.xlsx; COS Test, lines 700 + 701 |
| 61 | Late Payments | 2.70 | (1,412,876) | (3,815) | PNM Exhibit RNG-3 - WP COS.xlsx; COS Test, line 702 |
| 62 | Misc Service Charge Revenue | 2.70 | (3,157,048) | (8,524) | PNM Exhibit RNG-3 - WP COS.xlsx; COS Test, sum of lines 703 - 705 |
| 63 | Economy Service Customer RC | 4.80 | (3,586,112) | (17,213) | PNM Exhibit RNG-3 - WP COS.xlsx; COS Test, line 712 |
| 64 | Other Revenue Credits | 2.70 | (7,348,992) | (19,842) | PNM Exhibit RNG-3 - WP COS.xlsx; COS Test, lines 699 + 713 + 714 |
| 65 | Total | | (23,251,100) | 32,496 | Sum of lines 59-64 |
| 66 | | | | | |
| 67 | Sub-total | | 1,405,992,580 | 3,099,539 | Sum of lines 32-40 + line 65 + line 55 + line 47 + line 44 |
| 68 | | | | | |
| 69 | Revenue Taxes - I&S Fee | 70.10 | 7,992,048 | 560,243 | PNM Exhibit RNG-3 - WP COS.xlsx; COS Test, line 721 |
| 70 | | | | | |
| 71 | TOTAL COST OF SERVICE: | | 1,413,984,628 | 3,659,782 | Sum of lines 67 + 69 |
| 72 | | | | | |
| 73 | Franchise Fees | -1.60 | 35,420,400 | (56,673) | Line 71 * 88.83% * 2.82% (Note 2) |
| 74 | Gross Receipts Tax | 5.90 | 92,882,501 | 548,007 | Line 71 * 87.12% * 7.54% (Note 2) |
| 75 | | | | | |
| 76 | Net NMPRC Dollar Days | | | 4,151,116 | Sum of lines 71 - 74 |
| 77 | | | | | |
| 78 | | | | | |
| 79 | WORKING CAPITAL ALLOWANCE: | | | 4,151,116 | PNM Exhibit RNG-3 - WP COS.xlsx; COS TEST, line 245 |
| 80 | | | | | |
| 81 | Notes: | | | | |
| 82 | Note 1: Four Corners O&M is based on Company's books and records, adjusted for removal of base period planned outage costs as reflected in PNM Exhibit RNG-4 WP OM-3. | | | | |
| 83 | Note 2: 85.49% of revenues are subject to franchise tax at a rate of 2.84%. 84.79% of revenues are subject to gross receipts tax at a weighted average rate of 7.52%. | | | | |
| 84 | Note 3: During PNM's final review, it was identified that the working capital balance was not updated in RNG-3 to reflect the latest changes shown in this workpaper. Updating this would result in a net increase to the Base Rate Revenue Requirement of $30.6 thousand. PNM elected not to update due to the significance of the re-work and and because not updating this results in a customer benefit. | | | | |

# PNM Schedule E-2

Materials and supplies, prepayments, and deferred charges

| | A | B | C | D | E | F | G |
|---|---|---|---|---|---|---|---|
| 1 | **Public Service Company of New Mexico** | | | | | | |
| 2 | **Schedule E-2** | | | | | | |
| 3 | **Materials, Supplies, Prepayments, and Deferred Charges** | | | | | | |
| 4 | Lead Sheet | | | | | | |
| 5 | **Note: Base Period data is historical information from the Company's Books and Records.** | | | | | | |
| 6 | This schedule is sponsored by PNM Witness Gutierrez | | | | | | |
| 7 | Description | FERC | **Base Period Balance 7/1/2025** | **Base Period Balance 8/1/2025** | **Base Period Balance 9/1/2025** | **Base Period Balance 10/1/2025** | **Base Period Balance 11/1/2025** |
| 8 | Plant Materials and Supplies **(Note 1)** | | | | | | |
| 9 | Four Corners | 154 | 6,440,398 | 6,562,336 | 6,622,572 | 6,656,770 | 6,707,718 |
| 10 | Palo Verde **(Note 3)** | 154 | 17,492,432 | 17,666,947 | 16,811,953 | 16,889,094 | 16,929,813 |
| 11 | Afton | 154 | 2,611,843 | 2,613,750 | 2,631,301 | 2,632,575 | 2,633,999 |
| 12 | Luna | 154 | 2,300,212 | 2,300,212 | 2,300,212 | 2,460,017 | 2,460,017 |
| 13 | Lordsburg | 154 | 1,570,024 | 1,570,024 | 1,570,024 | 1,617,244 | 1,617,244 |
| 14 | Rio Bravo | 154 | 700,000 | 700,000 | 700,000 | 700,000 | 700,000 |
| 15 | Transmission | 154 | 25,826,372 | 25,880,053 | 25,870,646 | 27,073,332 | 27,184,380 |
| 16 | Distribution | 154 | 83,691,894 | 82,090,465 | 82,459,576 | 82,096,214 | 82,191,151 |
| 17 | Total Materials and Supplies | | 140,633,177 | 139,383,788 | 138,966,284 | 140,125,246 | 140,424,322 |
| 18 | | | | | | | |
| 19 | Prepayments **(Note 1)** | | | | | | |
| 20 | San Juan Non Coal **(Note 2)** | 165 | 55,882 | 46,607 | 37,331 | 28,056 | 108,017 |
| 21 | Four Corners | 165 | 505,306 | 424,052 | 556,951 | 477,660 | 387,184 |
| 22 | Palo Verde **(Note 3)** | 165 | 3,804,449 | 3,744,938 | 3,864,349 | 3,713,918 | 3,537,543 |
| 23 | Reeves | 165 | 116,210 | 495,721 | 449,241 | 388,365 | 529,449 |
| 24 | Afton | 165 | 280,541 | 233,962 | 187,383 | 140,805 | 437,243 |
| 25 | La Luz | 165 | 18,851 | 13,218 | 7,585 | 1,951 | 60,183 |
| 26 | Luna | 165 | (442,867) | (458,120) | (511,029) | 71,573 | 114,175 |
| 27 | Lordsburg | 165 | 718,042 | 713,928 | 715,259 | 870,962 | 859,277 |
| 28 | Rio Bravo | 165 | 184,848 | 226,642 | 197,240 | 165,432 | 274,858 |
| 29 | Production - Other | 165 | 301,036 | 343,671 | 312,815 | 305,500 | 393,114 |
| 30 | Transmission ROW **(Note 4)** | 165 | 1,452,470 | 2,743,554 | 2,420,783 | 2,098,012 | 1,775,241 |
| 31 | Transmission ROW (FERC Incremental Rates) | 165 | 439,766 | 364,171 | 288,575 | 212,980 | 137,385 |
| 32 | Transmission Other | 165 | 2,066,510 | 337,808 | 178,723 | 31,416 | 887,670 |
| 33 | Distribution | 165 | 15,469,760 | 14,250,428 | 12,469,742 | 10,875,749 | 10,034,750 |
| 34 | Renewables | 165 | 229,037 | 185,897 | 142,757 | 99,617 | 411,339 |
| 35 | Total Prepayments | | 25,199,842 | 23,666,478 | 21,317,706 | 19,481,997 | 19,947,427 |
| 36 | | | | | | | |
| 37 | | | | | | | |
| 38 | Right-Of-Way | | | | | | |
| 39 | Distribution **(Note 5)** | 186 | 8,682,571 | 8,643,358 | 8,614,226 | 8,580,708 | 8,544,614 |
| 40 | Transmission **(Note 5)** | 186 | 61,276,537 | 61,140,947 | 61,110,156 | 61,131,161 | 61,054,486 |
| 41 | Total Right-Of-Way | 186 | 69,959,108 | 69,784,306 | 69,724,382 | 69,711,869 | 69,599,100 |

| | A | B | H | I | J | K | L |
|---|---|---|---|---|---|---|---|
| 1 | **Public Service Company of New Mexico** | | | | | | |
| 2 | **Schedule E-2** | | | | | | |
| 3 | **Materials, Supplies, Prepayments, and Deferred Charges** | | | | | | |
| 4 | Lead Sheet | | | | | | |
| 5 | **Note: Base Period data is historical information from the Company's Books and Records.** | | | | | | |
| 6 | This schedule is sponsored by PNM Witness Gutierrez | | | | | | |
| 7 | Description | FERC | **Base Period Balance 12/1/2025** | **Base Period Balance 1/1/2026** | **Base Period Balance 2/1/2026** | **Base Period Balance 3/1/2026** | **Base Period Balance 4/1/2026** |
| 8 | Plant Materials and Supplies **(Note 1)** | | | | | | |
| 9 | Four Corners | 154 | 6,895,383 | 6,946,715 | 7,233,341 | 7,134,464 | 7,372,888 |
| 10 | Palo Verde **(Note 3)** | 154 | 17,098,215 | 17,196,699 | 17,377,990 | 17,638,444 | 17,902,887 |
| 11 | Afton | 154 | 2,635,622 | 2,542,141 | 2,536,847 | 2,534,884 | 2,529,846 |
| 12 | Luna | 154 | 2,229,933 | 2,272,749 | 2,272,749 | 2,272,749 | 2,314,377 |
| 13 | Lordsburg | 154 | 1,617,244 | 1,693,634 | 1,693,634 | 1,693,634 | 1,712,718 |
| 14 | Rio Bravo | 154 | 100,000 | - | - | - | - |
| 15 | Transmission | 154 | 26,751,883 | 26,703,738 | 26,703,403 | 26,807,320 | 26,792,264 |
| 16 | Distribution | 154 | 82,630,822 | 85,980,495 | 85,619,872 | 85,633,478 | 85,816,124 |
| 17 | Total Materials and Supplies | | 139,959,101 | 143,336,170 | 143,437,837 | 143,714,973 | 144,441,104 |
| 18 | | | | | | | |
| 19 | Prepayments **(Note 1)** | | | | | | |
| 20 | San Juan Non Coal **(Note 2)** | 165 | 96,922 | 85,827 | 74,732 | 63,637 | 52,542 |
| 21 | Four Corners | 165 | 305,526 | 223,869 | 150,730 | 398,357 | 357,303 |
| 22 | Palo Verde **(Note 3)** | 165 | 3,380,960 | 3,237,688 | 2,918,109 | 3,470,111 | 6,711,267 |
| 23 | Reeves | 165 | 468,832 | 408,214 | 347,597 | 286,980 | 226,362 |
| 24 | Afton | 165 | 391,094 | 344,944 | 298,794 | 252,645 | 206,495 |
| 25 | La Luz | 165 | 54,623 | 49,063 | 43,503 | 37,944 | 32,384 |
| 26 | Luna | 165 | 1,838,813 | 205,918 | (190,319) | 568,871 | 634,472 |
| 27 | Lordsburg | 165 | 950,342 | 2,572,479 | 889,627 | 998,592 | 1,086,240 |
| 28 | Rio Bravo | 165 | 243,215 | 211,572 | 179,929 | 148,286 | 116,643 |
| 29 | Production - Other | 165 | 383,602 | 405,956 | 277,712 | 245,231 | 242,044 |
| 30 | Transmission ROW **(Note 4)** | 165 | 1,452,470 | 1,129,699 | 806,928 | 484,157 | 161,385 |
| 31 | Transmission ROW (FERC Incremental Rates) | 165 | 61,790 | 791,398 | 713,835 | 636,273 | 558,710 |
| 32 | Transmission Other | 165 | 741,557 | 1,917,242 | 1,814,718 | 1,580,231 | 1,856,532 |
| 33 | Distribution | 165 | 8,422,268 | 6,590,256 | 5,357,708 | 3,655,583 | 3,505,142 |
| 34 | Renewables | 165 | 369,416 | 327,494 | 285,571 | 243,649 | 201,727 |
| 35 | Total Prepayments | | 19,161,430 | 18,501,619 | 13,969,176 | 13,070,545 | 15,949,249 |
| 36 | | | | | | | |
| 37 | | | | | | | |
| 38 | Right-Of-Way | | | | | | |
| 39 | Distribution **(Note 5)** | 186 | 8,507,718 | 8,475,896 | 8,346,791 | 8,308,846 | 8,270,625 |
| 40 | Transmission **(Note 5)** | 186 | 60,956,470 | 60,737,685 | 67,238,309 | 67,012,053 | 65,929,727 |
| 41 | Total Right-Of-Way | 186 | 69,464,187 | 69,213,581 | 75,585,100 | 75,320,899 | 74,200,352 |

| | A | B | M | N | O | P | Q |
|---|---|---|---|---|---|---|---|
| 1 | **Public Service Company of New Mexico** | | | | | | |
| 2 | **Schedule E-2** | | | | | | |
| 3 | **Materials, Supplies, Prepayments, and Deferred Charges** | | | | | | |
| 4 | Lead Sheet | | | | | | |
| 5 | **Note: Base Period data is historical information from the Company's Books and Records.** | | | | | | |
| 6 | This schedule is sponsored by PNM Witness Gutierrez | | | | | | |
| 7 | Description | FERC | **Base Period Balance 5/1/2026** | **Base Period Balance 6/1/2026** | **Base Period Balance 6/30/2026** | **13-Month Average Adjustment** | **SJGS Retirement (Note 2)** |
| 8 | Plant Materials and Supplies **(Note 1)** | | | | | | |
| 9 | Four Corners | 154 | 7,457,562 | 7,302,366 | 7,517,817 | (529,330) | |
| 10 | Palo Verde **(Note 3)** | 154 | 17,897,734 | 18,256,687 | 18,786,833 | (1,252,546) | |
| 11 | Afton | 154 | 2,529,713 | 2,534,044 | 2,533,247 | 43,662 | |
| 12 | Luna | 154 | 2,314,377 | 2,314,377 | 2,408,925 | (84,240) | |
| 13 | Lordsburg | 154 | 1,712,718 | 1,712,718 | 1,727,823 | (73,309) | |
| 14 | Rio Bravo | 154 | - | - | - | 276,923 | |
| 15 | Transmission | 154 | 26,090,936 | 26,094,129 | 26,269,115 | 196,083 | |
| 16 | Distribution | 154 | 85,750,960 | 83,585,627 | 82,989,904 | 897,526 | |
| 17 | Total Materials and Supplies | | 143,754,000 | 141,799,947 | 142,233,663 | (525,231) | - |
| 18 | | | | | | | |
| 19 | Prepayments **(Note 1)** | | | | | | |
| 20 | San Juan Non Coal **(Note 2)** | 165 | 41,447 | 30,352 | 126,160 | (60,967) | (65,193) |
| 21 | Four Corners | 165 | 305,827 | 256,202 | 215,147 | 135,938 | |
| 22 | Palo Verde **(Note 3)** | 165 | 3,160,896 | 3,463,159 | 7,257,214 | (3,236,860) | |
| 23 | Reeves | 165 | 165,745 | 105,128 | 112,648 | 202,775 | |
| 24 | Afton | 165 | 160,346 | 114,196 | 237,528 | 15,239 | |
| 25 | La Luz | 165 | 26,824 | 21,264 | 29,746 | 803 | |
| 26 | Luna | 165 | (248,894) | (138,050) | 112,697 | 7,091 | |
| 27 | Lordsburg | 165 | 1,136,401 | 1,174,564 | 1,187,628 | (120,448) | |
| 28 | Rio Bravo | 165 | 85,000 | 53,357 | 127,453 | 42,891 | |
| 29 | Production - Other | 165 | 209,563 | 196,612 | 80,451 | 203,957 | |
| 30 | Transmission ROW **(Note 4)** | 165 | 2,038,425 | 3,891,539 | 3,520,916 | (1,676,641) | |
| 31 | Transmission ROW (FERC Incremental Rates) | 165 | 481,148 | 403,585 | 454,302 | (27,846) | |
| 32 | Transmission Other | 165 | 2,841,081 | 398,482 | 608,007 | 565,837 | |
| 33 | Distribution | 165 | 1,760,427 | 1,147,589 | 7,765,045 | 27,605 | |
| 34 | Renewables | 165 | 159,804 | 117,882 | 198,900 | 29,799 | |
| 35 | Total Prepayments | | 12,324,039 | 11,235,860 | 22,033,843 | (3,890,827) | (65,193) |
| 36 | | | | | - | | |
| 37 | | | | | | | |
| 38 | Right-Of-Way | | | | | | |
| 39 | Distribution **(Note 5)** | 186 | 8,236,541 | 8,211,677 | 8,186,707 | | |
| 40 | Transmission **(Note 5)** | 186 | 81,427,327 | 81,233,669 | 81,021,726 | | |
| 41 | Total Right-Of-Way | 186 | 89,663,868 | 89,445,347 | 89,208,432 | - | - |

| | A | B | R | S | T | U | V |
|---|---|---|---|---|---|---|---|
| 1 | **Public Service Company of New Mexico** | | | | | | |
| 2 | **Schedule E-2** | | | | | | |
| 3 | **Materials, Supplies, Prepayments, and Deferred Charges** | | | | | | |
| 4 | Lead Sheet | | | | | | |
| 5 | **Note: Base Period data is historical information from the Company's Books and Records.** | | | | | | |
| 6 | This schedule is sponsored by PNM Witness Gutierrez | | | | | | |
| 7 | Description | FERC | **Add Back ROW Prepayment (Note 4)** | **Adjusted Base Period Ending Balance** | **Linkage 7/31/2026** | **Linkage 8/31/2026** | **Linkage 9/30/2026** |
| 8 | Plant Materials and Supplies **(Note 1)** | | | | | | |
| 9 | Four Corners | 154 | | 6,988,487 | 6,988,487 | 6,988,487 | 6,988,487 |
| 10 | Palo Verde **(Note 3)** | 154 | | 17,534,287 | 16,945,888 | 16,945,888 | 16,945,888 |
| 11 | Afton | 154 | | 2,576,909 | 2,576,909 | 2,576,909 | 2,576,909 |
| 12 | Luna | 154 | | 2,324,685 | 2,324,685 | 2,324,685 | 2,324,685 |
| 13 | Lordsburg | 154 | | 1,654,514 | 1,654,514 | 1,654,514 | 1,654,514 |
| 14 | Rio Bravo | 154 | | 276,923 | 276,923 | 276,923 | 276,923 |
| 15 | Transmission | 154 | | 26,465,198 | 26,465,198 | 26,465,198 | 26,465,198 |
| 16 | Distribution | 154 | | 83,887,429 | 83,887,429 | 83,887,429 | 83,887,429 |
| 17 | Total Materials and Supplies | | - | 141,708,432 | 141,120,033 | 141,120,033 | 141,120,033 |
| 18 | | | | | | | |
| 19 | Prepayments **(Note 1)** | | | | | | |
| 20 | San Juan Non Coal **(Note 2)** | 165 | | - | - | - | - |
| 21 | Four Corners | 165 | | 351,086 | 351,086 | 351,086 | 351,086 |
| 22 | Palo Verde **(Note 3)** | 165 | | 4,020,354 | 3,880,046 | 3,880,046 | 3,880,046 |
| 23 | Reeves | 165 | | 315,422 | 315,422 | 315,422 | 315,422 |
| 24 | Afton | 165 | | 252,767 | 252,767 | 252,767 | 252,767 |
| 25 | La Luz | 165 | | 30,549 | 30,549 | 30,549 | 30,549 |
| 26 | Luna | 165 | | 119,788 | 119,788 | 119,788 | 119,788 |
| 27 | Lordsburg | 165 | | 1,067,180 | 1,067,180 | 1,067,180 | 1,067,180 |
| 28 | Rio Bravo | 165 | | 170,344 | 170,344 | 170,344 | 170,344 |
| 29 | Production - Other | 165 | | 284,408 | 284,408 | 284,408 | 284,408 |
| 30 | Transmission ROW **(Note 4)** | 165 | 2,026,624 | 3,870,899 | 5,482,491 | 4,797,180 | 4,111,868 |
| 31 | Transmission ROW (FERC Incremental Rates) | 165 | | 426,455 | 426,455 | 426,455 | 426,455 |
| 32 | Transmission Other | 165 | | 1,173,844 | 1,173,844 | 1,173,844 | 1,173,844 |
| 33 | Distribution | 165 | | 7,792,650 | 7,792,650 | 7,792,650 | 7,792,650 |
| 34 | Renewables | 165 | | 228,699 | 228,699 | 228,699 | 228,699 |
| 35 | Total Prepayments | | 2,026,624 | 20,104,447 | 21,575,731 | 20,890,420 | 20,205,108 |
| 36 | | | | | | | |
| 37 | | | | | | | |
| 38 | Right-Of-Way | | | | | | |
| 39 | Distribution **(Note 5)** | 186 | | 8,186,707 | 8,148,486 | 8,110,266 | 8,072,045 |
| 40 | Transmission **(Note 5)** | 186 | | 81,021,726 | 80,752,368 | 80,483,011 | 80,213,654 |
| 41 | Total Right-Of-Way | 186 | - | 89,208,432 | 88,900,855 | 88,593,277 | 88,285,699 |

| | A | B | W | X | Y | Z | AA |
|---|---|---|---|---|---|---|---|
| 1 | **Public Service Company of New Mexico** | | | | | | |
| 2 | **Schedule E-2** | | | | | | |
| 3 | **Materials, Supplies, Prepayments, and Deferred Charges** | | | | | | |
| 4 | Lead Sheet | | | | | | |
| 5 | **Note: Base Period data is historical information from the Company's Books and Records.** | | | | | | |
| 6 | This schedule is sponsored by PNM Witness Gutierrez | | | | | | |
| 7 | Description | FERC | **Linkage 10/31/2026** | **Linkage 11/30/2026** | **Linkage 12/31/2026** | **Linkage 1/31/2027** | **Linkage 2/28/2027** |
| 8 | Plant Materials and Supplies **(Note 1)** | | | | | | |
| 9 | Four Corners | 154 | 6,988,487 | 6,988,487 | 6,988,487 | 6,988,487 | 6,988,487 |
| 10 | Palo Verde **(Note 3)** | 154 | 16,945,888 | 16,945,888 | 16,945,888 | 16,945,888 | 16,945,888 |
| 11 | Afton | 154 | 2,576,909 | 2,576,909 | 2,576,909 | 2,576,909 | 2,576,909 |
| 12 | Luna | 154 | 2,324,685 | 2,324,685 | 2,324,685 | 2,324,685 | 2,324,685 |
| 13 | Lordsburg | 154 | 1,654,514 | 1,654,514 | 1,654,514 | 1,654,514 | 1,654,514 |
| 14 | Rio Bravo | 154 | 276,923 | 276,923 | 276,923 | 276,923 | 276,923 |
| 15 | Transmission | 154 | 26,465,198 | 26,465,198 | 26,465,198 | 26,465,198 | 26,465,198 |
| 16 | Distribution | 154 | 83,887,429 | 83,887,429 | 83,887,429 | 83,887,429 | 83,887,429 |
| 17 | Total Materials and Supplies | | 141,120,033 | 141,120,033 | 141,120,033 | 141,120,033 | 141,120,033 |
| 18 | | | | | | | |
| 19 | Prepayments **(Note 1)** | | | | | | |
| 20 | San Juan Non Coal **(Note 2)** | 165 | - | - | - | - | - |
| 21 | Four Corners | 165 | 351,086 | 351,086 | 351,086 | 351,086 | 351,086 |
| 22 | Palo Verde **(Note 3)** | 165 | 3,880,046 | 3,880,046 | 3,880,046 | 3,880,046 | 3,880,046 |
| 23 | Reeves | 165 | 315,422 | 315,422 | 315,422 | 315,422 | 315,422 |
| 24 | Afton | 165 | 252,767 | 252,767 | 252,767 | 252,767 | 252,767 |
| 25 | La Luz | 165 | 30,549 | 30,549 | 30,549 | 30,549 | 30,549 |
| 26 | Luna | 165 | 119,788 | 119,788 | 119,788 | 119,788 | 119,788 |
| 27 | Lordsburg | 165 | 1,067,180 | 1,067,180 | 1,067,180 | 1,067,180 | 1,067,180 |
| 28 | Rio Bravo | 165 | 170,344 | 170,344 | 170,344 | 170,344 | 170,344 |
| 29 | Production - Other | 165 | 284,408 | 284,408 | 284,408 | 284,408 | 284,408 |
| 30 | Transmission ROW **(Note 4)** | 165 | 3,426,557 | 2,741,246 | 2,055,934 | 1,370,623 | 685,311 |
| 31 | Transmission ROW (FERC Incremental Rates) | 165 | 426,455 | 426,455 | 426,455 | 426,455 | 426,455 |
| 32 | Transmission Other | 165 | 1,173,844 | 1,173,844 | 1,173,844 | 1,173,844 | 1,173,844 |
| 33 | Distribution | 165 | 7,792,650 | 7,792,650 | 7,792,650 | 7,792,650 | 7,792,650 |
| 34 | Renewables | 165 | 228,699 | 228,699 | 228,699 | 228,699 | 228,699 |
| 35 | Total Prepayments | | 19,519,797 | 18,834,486 | 18,149,174 | 17,463,863 | 16,778,551 |
| 36 | | | | | | | |
| 37 | | | | | | | |
| 38 | Right-Of-Way | | | | | | |
| 39 | Distribution **(Note 5)** | 186 | 8,033,825 | 7,995,604 | 7,957,383 | 7,919,163 | 7,880,942 |
| 40 | Transmission **(Note 5)** | 186 | 79,944,297 | 79,674,940 | 79,405,582 | 79,136,225 | 78,866,868 |
| 41 | Total Right-Of-Way | 186 | 87,978,121 | 87,670,543 | 87,362,966 | 87,055,388 | 86,747,810 |

| | A | B | AB | AC | AD | AE | AF |
|---|---|---|---|---|---|---|---|
| 1 | **Public Service Company of New Mexico** | | | | | | |
| 2 | **Schedule E-2** | | | | | | |
| 3 | **Materials, Supplies, Prepayments, and Deferred Charges** | | | | | | |
| 4 | Lead Sheet | | | | | | |
| 5 | **Note: Base Period data is historical information from the Company's Books and Records.** | | | | | | |
| 6 | This schedule is sponsored by PNM Witness Gutierrez | | | | | | |
| 7 | Description | FERC | **Linkage 3/31/2027** | **Linkage 4/30/2027** | **Linkage 5/31/2027** | **Linkage 6/30/2027** | **Linkage 7/31/2027** |
| 8 | Plant Materials and Supplies **(Note 1)** | | | | | | |
| 9 | Four Corners | 154 | 6,988,487 | 6,988,487 | 6,988,487 | 6,988,487 | 6,988,487 |
| 10 | Palo Verde **(Note 3)** | 154 | 16,945,888 | 16,945,888 | 16,945,888 | 16,945,888 | 16,945,888 |
| 11 | Afton | 154 | 2,576,909 | 2,576,909 | 2,576,909 | 2,576,909 | 2,576,909 |
| 12 | Luna | 154 | 2,324,685 | 2,324,685 | 2,324,685 | 2,324,685 | 2,324,685 |
| 13 | Lordsburg | 154 | 1,654,514 | 1,654,514 | 1,654,514 | 1,654,514 | 1,654,514 |
| 14 | Rio Bravo | 154 | 276,923 | 276,923 | 276,923 | 276,923 | 276,923 |
| 15 | Transmission | 154 | 26,465,198 | 26,465,198 | 26,465,198 | 26,465,198 | 26,465,198 |
| 16 | Distribution | 154 | 83,887,429 | 83,887,429 | 83,887,429 | 83,887,429 | 83,887,429 |
| 17 | Total Materials and Supplies | | 141,120,033 | 141,120,033 | 141,120,033 | 141,120,033 | 141,120,033 |
| 18 | | | | | | | |
| 19 | Prepayments **(Note 1)** | | | | | | |
| 20 | San Juan Non Coal **(Note 2)** | 165 | - | - | - | - | - |
| 21 | Four Corners | 165 | 351,086 | 351,086 | 351,086 | 351,086 | 351,086 |
| 22 | Palo Verde **(Note 3)** | 165 | 3,880,046 | 3,880,046 | 3,880,046 | 3,880,046 | 3,880,046 |
| 23 | Reeves | 165 | 315,422 | 315,422 | 315,422 | 315,422 | 315,422 |
| 24 | Afton | 165 | 252,767 | 252,767 | 252,767 | 252,767 | 252,767 |
| 25 | La Luz | 165 | 30,549 | 30,549 | 30,549 | 30,549 | 30,549 |
| 26 | Luna | 165 | 119,788 | 119,788 | 119,788 | 119,788 | 119,788 |
| 27 | Lordsburg | 165 | 1,067,180 | 1,067,180 | 1,067,180 | 1,067,180 | 1,067,180 |
| 28 | Rio Bravo | 165 | 170,344 | 170,344 | 170,344 | 170,344 | 170,344 |
| 29 | Production - Other | 165 | 284,408 | 284,408 | 284,408 | 284,408 | 284,408 |
| 30 | Transmission ROW **(Note 4)** | 165 | 0 | 8,595,543 | 7,814,130 | 7,032,717 | 6,251,304 |
| 31 | Transmission ROW (FERC Incremental Rates) | 165 | 426,455 | 426,455 | 426,455 | 426,455 | 426,455 |
| 32 | Transmission Other | 165 | 1,173,844 | 1,173,844 | 1,173,844 | 1,173,844 | 1,173,844 |
| 33 | Distribution | 165 | 7,792,650 | 7,792,650 | 7,792,650 | 7,792,650 | 7,792,650 |
| 34 | Renewables | 165 | 228,699 | 228,699 | 228,699 | 228,699 | 228,699 |
| 35 | Total Prepayments | | 16,093,240 | 24,688,783 | 23,907,370 | 23,125,957 | 22,344,544 |
| 36 | | | | | | | |
| 37 | | | | | | | |
| 38 | Right-Of-Way | | | | | | |
| 39 | Distribution **(Note 5)** | 186 | 7,842,722 | 7,804,501 | 7,766,281 | 7,728,060 | 7,689,839 |
| 40 | Transmission **(Note 5)** | 186 | 79,095,844 | 78,824,820 | 78,553,796 | 78,282,772 | 78,011,748 |
| 41 | Total Right-Of-Way | 186 | 86,938,566 | 86,629,321 | 86,320,077 | 86,010,832 | 85,701,588 |

| | A | B | AG | AH | AI | AJ | AK |
|---|---|---|---|---|---|---|---|
| 1 | **Public Service Company of New Mexico** | | | | | | |
| 2 | **Schedule E-2** | | | | | | |
| 3 | **Materials, Supplies, Prepayments, and Deferred Charges** | | | | | | |
| 4 | Lead Sheet | | | | | | |
| 5 | **Note: Base Period data is historical information from the Company's Books and Records.** | | | | | | |
| 6 | This schedule is sponsored by PNM Witness Gutierrez | | | | | | |
| 7 | Description | FERC | **Linkage 8/31/2027** | **Linkage 9/30/2027** | **Test Period 10/31/2027** | **Test Period 11/30/2027** | **Test Period 12/31/2027** |
| 8 | Plant Materials and Supplies **(Note 1)** | | | | | | |
| 9 | Four Corners | 154 | 6,988,487 | 6,988,487 | 6,988,487 | 6,988,487 | 6,988,487 |
| 10 | Palo Verde **(Note 3)** | 154 | 16,945,888 | 16,945,888 | 16,945,888 | 16,945,888 | 16,945,888 |
| 11 | Afton | 154 | 2,576,909 | 2,576,909 | 2,576,909 | 2,576,909 | 2,576,909 |
| 12 | Luna | 154 | 2,324,685 | 2,324,685 | 2,324,685 | 2,324,685 | 2,324,685 |
| 13 | Lordsburg | 154 | 1,654,514 | 1,654,514 | 1,654,514 | 1,654,514 | 1,654,514 |
| 14 | Rio Bravo | 154 | 276,923 | 276,923 | 276,923 | 276,923 | 276,923 |
| 15 | Transmission | 154 | 26,465,198 | 26,465,198 | 26,465,198 | 26,465,198 | 26,465,198 |
| 16 | Distribution | 154 | 83,887,429 | 83,887,429 | 83,887,429 | 83,887,429 | 83,887,429 |
| 17 | Total Materials and Supplies | | 141,120,033 | 141,120,033 | 141,120,033 | 141,120,033 | 141,120,033 |
| 18 | | | | | | | |
| 19 | Prepayments **(Note 1)** | | | | | | |
| 20 | San Juan Non Coal **(Note 2)** | 165 | - | - | - | - | - |
| 21 | Four Corners | 165 | 351,086 | 351,086 | 351,086 | 351,086 | 351,086 |
| 22 | Palo Verde **(Note 3)** | 165 | 3,880,046 | 3,880,046 | 3,880,046 | 3,880,046 | 3,880,046 |
| 23 | Reeves | 165 | 315,422 | 315,422 | 315,422 | 315,422 | 315,422 |
| 24 | Afton | 165 | 252,767 | 252,767 | 252,767 | 252,767 | 252,767 |
| 25 | La Luz | 165 | 30,549 | 30,549 | 30,549 | 30,549 | 30,549 |
| 26 | Luna | 165 | 119,788 | 119,788 | 119,788 | 119,788 | 119,788 |
| 27 | Lordsburg | 165 | 1,067,180 | 1,067,180 | 1,067,180 | 1,067,180 | 1,067,180 |
| 28 | Rio Bravo | 165 | 170,344 | 170,344 | 170,344 | 170,344 | 170,344 |
| 29 | Production - Other | 165 | 284,408 | 284,408 | 284,408 | 284,408 | 284,408 |
| 30 | Transmission ROW **(Note 4)** | 165 | 5,469,891 | 4,688,478 | 3,907,065 | 3,125,652 | 2,344,239 |
| 31 | Transmission ROW (FERC Incremental Rates) | 165 | 426,455 | 426,455 | 426,455 | 426,455 | 426,455 |
| 32 | Transmission Other | 165 | 1,173,844 | 1,173,844 | 1,173,844 | 1,173,844 | 1,173,844 |
| 33 | Distribution | 165 | 7,792,650 | 7,792,650 | 7,792,650 | 7,792,650 | 7,792,650 |
| 34 | Renewables | 165 | 228,699 | 228,699 | 228,699 | 228,699 | 228,699 |
| 35 | Total Prepayments | | 21,563,131 | 20,781,718 | 20,000,305 | 19,218,892 | 18,437,479 |
| 36 | | | | | | | |
| 37 | | | | | | | |
| 38 | Right-Of-Way | | | | | | |
| 39 | Distribution **(Note 5)** | 186 | 7,651,619 | 7,613,398 | 7,575,178 | 7,536,957 | 7,498,737 |
| 40 | Transmission **(Note 5)** | 186 | 77,740,724 | 77,569,367 | 77,298,010 | 77,026,653 | 76,755,295 |
| 41 | Total Right-Of-Way | 186 | 85,392,343 | 85,182,765 | 84,873,188 | 84,563,610 | 84,254,032 |

| | A | B | AL | AM | AN | AO |
|---|---|---|---|---|---|---|
| 1 | **Public Service Company of New Mexico** | | | | | |
| 2 | **Schedule E-2** | | | | | |
| 3 | **Materials, Supplies, Prepayments, and Deferred Charges** | | | | | |
| 4 | Lead Sheet | | | | | |
| 5 | **Note: Base Period data is historical information from the Company's Books and Records.** | | | | | |
| 6 | This schedule is sponsored by PNM Witness Gutierrez | | | | | |
| 7 | Description | FERC | **Test Period Balance 1/31/2028** | **Test Period Balance 2/29/2028** | **Test Period Balance 3/31/2028** | **Test Period Balance 4/30/2028** |
| 8 | Plant Materials and Supplies **(Note 1)** | | | | | |
| 9 | Four Corners | 154 | 6,988,487 | 6,988,487 | 6,988,487 | 6,988,487 |
| 10 | Palo Verde **(Note 3)** | 154 | 16,945,888 | 16,945,888 | 16,945,888 | 16,945,888 |
| 11 | Afton | 154 | 2,576,909 | 2,576,909 | 2,576,909 | 2,576,909 |
| 12 | Luna | 154 | 2,324,685 | 2,324,685 | 2,324,685 | 2,324,685 |
| 13 | Lordsburg | 154 | 1,654,514 | 1,654,514 | 1,654,514 | 1,654,514 |
| 14 | Rio Bravo | 154 | 276,923 | 276,923 | 276,923 | 276,923 |
| 15 | Transmission | 154 | 26,465,198 | 26,465,198 | 26,465,198 | 26,465,198 |
| 16 | Distribution | 154 | 83,887,429 | 83,887,429 | 83,887,429 | 83,887,429 |
| 17 | Total Materials and Supplies | | 141,120,033 | 141,120,033 | 141,120,033 | 141,120,033 |
| 18 | | | | | | |
| 19 | Prepayments **(Note 1)** | | | | | |
| 20 | San Juan Non Coal **(Note 2)** | 165 | - | - | - | - |
| 21 | Four Corners | 165 | 351,086 | 351,086 | 351,086 | 351,086 |
| 22 | Palo Verde **(Note 3)** | 165 | 3,880,046 | 3,880,046 | 3,880,046 | 3,880,046 |
| 23 | Reeves | 165 | 315,422 | 315,422 | 315,422 | 315,422 |
| 24 | Afton | 165 | 252,767 | 252,767 | 252,767 | 252,767 |
| 25 | La Luz | 165 | 30,549 | 30,549 | 30,549 | 30,549 |
| 26 | Luna | 165 | 119,788 | 119,788 | 119,788 | 119,788 |
| 27 | Lordsburg | 165 | 1,067,180 | 1,067,180 | 1,067,180 | 1,067,180 |
| 28 | Rio Bravo | 165 | 170,344 | 170,344 | 170,344 | 170,344 |
| 29 | Production - Other | 165 | 284,408 | 284,408 | 284,408 | 284,408 |
| 30 | Transmission ROW **(Note 4)** | 165 | 1,562,826 | 781,413 | 0 | 8,853,409 |
| 31 | Transmission ROW (FERC Incremental Rates) | 165 | 426,455 | 426,455 | 426,455 | 426,455 |
| 32 | Transmission Other | 165 | 1,173,844 | 1,173,844 | 1,173,844 | 1,173,844 |
| 33 | Distribution | 165 | 7,792,650 | 7,792,650 | 7,792,650 | 7,792,650 |
| 34 | Renewables | 165 | 228,699 | 228,699 | 228,699 | 228,699 |
| 35 | Total Prepayments | | 17,656,066 | 16,874,653 | 16,093,240 | 24,946,649 |
| 36 | | | | | | |
| 37 | | | | | | |
| 38 | Right-Of-Way | | | | | |
| 39 | Distribution **(Note 5)** | 186 | 7,460,516 | 7,422,296 | 7,384,075 | 7,345,854 |
| 40 | Transmission **(Note 5)** | 186 | 76,483,938 | 76,212,581 | 75,941,224 | 75,669,866 |
| 41 | Total Right-Of-Way | 186 | 83,944,454 | 83,634,876 | 83,325,299 | 83,015,721 |

| | A | B | AP | AQ | AR | AS | AT |
|---|---|---|---|---|---|---|---|
| 1 | **Public Service Company of New Mexico** | | | | | | |
| 2 | **Schedule E-2** | | | | | | |
| 3 | **Materials, Supplies, Prepayments, and Deferred Charges** | | | | | | |
| 4 | Lead Sheet | | | | | | |
| 5 | **Note: Base Period data is historical information from the Company's Books and Records.** | | | | | | |
| 6 | This schedule is sponsored by PNM Witness Gutierrez | | | | | | |
| 7 | Description | FERC | **Test Period Balance 5/31/2028** | **Test Period Balance 6/30/2028** | **Test Period Balance 7/31/2028** | **Test Period Balance 8/31/2028** | **Test Period Balance 9/30/2028** |
| 8 | Plant Materials and Supplies **(Note 1)** | | | | | | |
| 9 | Four Corners | 154 | 6,988,487 | 6,988,487 | 6,988,487 | 6,988,487 | 6,988,487 |
| 10 | Palo Verde **(Note 3)** | 154 | 16,945,888 | 16,945,888 | 16,945,888 | 16,945,888 | 16,945,888 |
| 11 | Afton | 154 | 2,576,909 | 2,576,909 | 2,576,909 | 2,576,909 | 2,576,909 |
| 12 | Luna | 154 | 2,324,685 | 2,324,685 | 2,324,685 | 2,324,685 | 2,324,685 |
| 13 | Lordsburg | 154 | 1,654,514 | 1,654,514 | 1,654,514 | 1,654,514 | 1,654,514 |
| 14 | Rio Bravo | 154 | 276,923 | 276,923 | 276,923 | 276,923 | 276,923 |
| 15 | Transmission | 154 | 26,465,198 | 26,465,198 | 26,465,198 | 26,465,198 | 26,465,198 |
| 16 | Distribution | 154 | 83,887,429 | 83,887,429 | 83,887,429 | 83,887,429 | 83,887,429 |
| 17 | Total Materials and Supplies | | 141,120,033 | 141,120,033 | 141,120,033 | 141,120,033 | 141,120,033 |
| 18 | | | | | | | |
| 19 | Prepayments **(Note 1)** | | | | | | |
| 20 | San Juan Non Coal **(Note 2)** | 165 | - | - | - | - | - |
| 21 | Four Corners | 165 | 351,086 | 351,086 | 351,086 | 351,086 | 351,086 |
| 22 | Palo Verde **(Note 3)** | 165 | 3,880,046 | 3,880,046 | 3,880,046 | 3,880,046 | 3,880,046 |
| 23 | Reeves | 165 | 315,422 | 315,422 | 315,422 | 315,422 | 315,422 |
| 24 | Afton | 165 | 252,767 | 252,767 | 252,767 | 252,767 | 252,767 |
| 25 | La Luz | 165 | 30,549 | 30,549 | 30,549 | 30,549 | 30,549 |
| 26 | Luna | 165 | 119,788 | 119,788 | 119,788 | 119,788 | 119,788 |
| 27 | Lordsburg | 165 | 1,067,180 | 1,067,180 | 1,067,180 | 1,067,180 | 1,067,180 |
| 28 | Rio Bravo | 165 | 170,344 | 170,344 | 170,344 | 170,344 | 170,344 |
| 29 | Production - Other | 165 | 284,408 | 284,408 | 284,408 | 284,408 | 284,408 |
| 30 | Transmission ROW **(Note 4)** | 165 | 8,048,554 | 7,243,699 | 6,438,843 | 5,633,988 | 4,829,132 |
| 31 | Transmission ROW (FERC Incremental Rates) | 165 | 426,455 | 426,455 | 426,455 | 426,455 | 426,455 |
| 32 | Transmission Other | 165 | 1,173,844 | 1,173,844 | 1,173,844 | 1,173,844 | 1,173,844 |
| 33 | Distribution | 165 | 7,792,650 | 7,792,650 | 7,792,650 | 7,792,650 | 7,792,650 |
| 34 | Renewables | 165 | 228,699 | 228,699 | 228,699 | 228,699 | 228,699 |
| 35 | Total Prepayments | | 24,141,794 | 23,336,939 | 22,532,083 | 21,727,228 | 20,922,372 |
| 36 | | | | | | | |
| 37 | | | | | | | |
| 38 | Right-Of-Way | | | | | | |
| 39 | Distribution **(Note 5)** | 186 | 7,307,634 | 7,269,413 | 7,231,193 | 7,192,972 | 7,154,752 |
| 40 | Transmission **(Note 5)** | 186 | 75,398,509 | 75,127,152 | 74,855,795 | 74,584,437 | 74,313,080 |
| 41 | Total Right-Of-Way | 186 | 82,706,143 | 82,396,565 | 82,086,987 | 81,777,410 | 81,467,832 |

| | A | B | AU | AV | AW | AX |
|---|---|---|---|---|---|---|
| 1 | **Public Service Company of New Mexico** | | | | | |
| 2 | **Schedule E-2** | | | | | |
| 3 | **Materials, Supplies, Prepayments, and Deferred Charges** | | | | | |
| 4 | Lead Sheet | | | | | |
| 5 | **Note: Base Period data is historical information from the Company's Books and Records.** | | | | | |
| 6 | This schedule is sponsored by PNM Witness Gutierrez | | | | | |
| 7 | Description | FERC | **13-Month Average Adjustment** | **Other Test Period Adjustments** | **Adjusted Test Period Ending Balance** | **Reference** |
| 8 | Plant Materials and Supplies **(Note 1)** | | | | | |
| 9 | Four Corners | 154 | - | | 6,988,487 | |
| 10 | Palo Verde **(Note 3)** | 154 | - | | 16,945,888 | WP WC-2, column C |
| 11 | Afton | 154 | - | | 2,576,909 | |
| 12 | Luna | 154 | - | | 2,324,685 | |
| 13 | Lordsburg | 154 | - | | 1,654,514 | |
| 14 | Rio Bravo | 154 | - | | 276,923 | |
| 15 | Transmission | 154 | - | | 26,465,198 | |
| 16 | Distribution | 154 | - | | 83,887,429 | |
| 17 | Total Materials and Supplies | | - | - | 141,120,033 | |
| 18 | | | | | | |
| 19 | Prepayments **(Note 1)** | | | | | |
| 20 | San Juan Non Coal **(Note 2)** | 165 | - | | - | |
| 21 | Four Corners | 165 | - | | 351,086 | |
| 22 | Palo Verde **(Note 3)** | 165 | - | | 3,880,046 | WP WC-2, column L |
| 23 | Reeves | 165 | - | | 315,422 | |
| 24 | Afton | 165 | - | | 252,767 | |
| 25 | La Luz | 165 | - | | 30,549 | |
| 26 | Luna | 165 | - | | 119,788 | |
| 27 | Lordsburg | 165 | - | | 1,067,180 | |
| 28 | Rio Bravo | 165 | - | | 170,344 | |
| 29 | Production - Other | 165 | - | | 284,408 | |
| 30 | Transmission ROW **(Note 4)** | 165 | (409,340) | | 4,419,792 | WP WC-3, line 18 |
| 31 | Transmission ROW (FERC Incremental Rates) | 165 | - | | 426,455 | |
| 32 | Transmission Other | 165 | - | | 1,173,844 | |
| 33 | Distribution | 165 | - | | 7,792,650 | |
| 34 | Renewables | 165 | - | | 228,699 | |
| 35 | Total Prepayments | | (409,340) | - | 20,513,032 | |
| 36 | | | | | | |
| 37 | | | | | | |
| 38 | Right-Of-Way | | | | | |
| 39 | Distribution **(Note 5)** | 186 | 229,323 | | 7,384,075 | WP OM-15, line 58 |
| 40 | Transmission **(Note 5)** | 186 | 1,628,143 | | 75,941,224 | WP OM-16, line 221 |
| 41 | Total Right-Of-Way | 186 | 1,857,467 | - | 83,325,299 | |

| | A | B | C | D |
|---|---|---|---|---|
| 1 | **Public Service Company of New Mexico** | | | |
| 2 | **Schedule E-2 Notes** | | | |
| 3 | **Materials, Supplies, Prepayments, and Deferred Charges** | | | |
| 4 | Lead Sheet | | | |
| 5 | This schedule is sponsored by PNM Witness Gutierrez | | | |
| 6 | **Note 1:** PNM does not forecast changes to Materials and Supplies or Prepayments, except for ROW balances, Palo Verde, and Transmission Deferral. Therefore, Linkage and Test Period balances agree to the 13-month average | | | |
| 7 | calculated for the base period. | | | |
| 8 | **Note 2**: San Juan Generating Station ("SJGS") costs are removed from the base period. This adjustments reflects the abandonment of SJGS as authorized in NMPRC Case No. 19-00018-UT. | | | |
| 9 | Note 3: PNM specifically forecasted Palo Verde working capital balances. Please see PNM Exhibit RNG-4 WP WC-2 for | | | |
| 10 | Palo Verde working capital balances for Linkage and Test Periods. | | | |
| 11 | **Note 4:** Navajo ROW treated as lease under FERC and GAAP accounting. Balance of annual payment is comprised of | | | |
| 12 | an annual base payment of $6,000,000 plus a CPI adjustment. The base payment is treated as a lease and recorded | | | |
| 13 | to operating lease assets and the CPI adjustment is recorded to account 165000. In order to reverse the impacts of lease accounting, PNM is adding back the average balance of the prepayment of the base payment. This is consistent with the treatment in NMPRC Case No. 22-00270-UT. | | | |
| 14 | Note 5: ROW balances are forecasted based on current amortization schedules and forecasted renewals. Please refer to PNM Exhibit RNG-4 WP OM-15 and WP OM-16 for ROW balances in the Linkage and Test Period. Also, please | | | |
| 15 | refer to the testimony of PNM Witness Flores-Olivas for discussion of ROW renewals. | | | |
| 16 | | | | |

# PNM Schedule E-3

Fuel inventories by plant location

| | A | B | C | D | E | F |
|---|---|---|---|---|---|---|
| 1 | **Public Service Company of New Mexico** | | | | | |
| 2 | **Schedule E-3** | | | | | |
| 3 | **Fuel Inventories by Plant** | | | | | |
| 4 | Lead Sheet | | | | | |
| 5 | **Note: Base period data is historical information from the Company's Books and Records.** | | | | | |
| 6 | This schedule is sponsored by PNM Witness Gutierrez | | | | | |
| 7 | **A/C Number and Description** | **Base Period Balance 7/1/2025** | **Base Period Balance 8/1/2025** | **Base Period Balance 9/1/2025** | **Base Period Balance 10/1/2025** | **Base Period Balance 11/1/2025** |
| 8 | 3-151001 Rio Bravo Fuel Oil **(Note 1)** | 1,090,597 | 1,090,597 | 1,090,597 | 1,090,597 | 1,090,597 |
| 9 | Total Fuel Stock | 1,090,597 | 1,090,597 | 1,090,597 | 1,090,597 | 1,090,597 |

| | A | G | H | I | J | K |
|---|---|---|---|---|---|---|
| 1 | **Public Service Company of New Mexico** | | | | | |
| 2 | **Schedule E-3** | | | | | |
| 3 | **Fuel Inventories by Plant** | | | | | |
| 4 | Lead Sheet | | | | | |
| 5 | **Note: Base period data is historical information from the Company's Books and Records.** | | | | | |
| 6 | This schedule is sponsored by PNM Witness Gutierrez | | | | | |
| 7 | **A/C Number and Description** | **Base Period Balance 12/1/2025** | **Base Period Balance 1/1/2026** | **Base Period Balance 2/1/2026** | **Base Period Balance 3/1/2026** | **Base Period Balance 4/1/2026** |
| 8 | 3-151001 Rio Bravo Fuel Oil **(Note 1)** | 1,090,597 | 1,090,377 | 1,090,377 | 1,088,372 | 1,087,542 |
| 9 | Total Fuel Stock | 1,090,597 | 1,090,377 | 1,090,377 | 1,088,372 | 1,087,542 |

| | A | L | M | N | O |
|---|---|---|---|---|---|
| 1 | **Public Service Company of New Mexico** | | | | |
| 2 | **Schedule E-3** | | | | |
| 3 | **Fuel Inventories by Plant** | | | | |
| 4 | Lead Sheet | | | | |
| 5 | **Note: Base period data is historical information from the Company's Books and Records.** | | | | |
| 6 | This schedule is sponsored by PNM Witness Gutierrez | | | | |
| 7 | **A/C Number and Description** | **Base Period Balance 5/1/2026** | **Base Period Balance 6/1/2026** | **Base Period Balance 6/30/2026** | **13-Month Average Adjustment** |
| 8 | 3-151001 Rio Bravo Fuel Oil **(Note 1)** | 1,018,422 | 1,005,026 | 999,757 | 71,278 |
| 9 | Total Fuel Stock | 1,018,422 | 1,005,026 | 999,757 | 71,278 |

| | A | P | Q | R | S | T |
|---|---|---|---|---|---|---|
| 1 | **Public Service Company of New Mexico** | | | | | |
| 2 | **Schedule E-3** | | | | | |
| 3 | **Fuel Inventories by Plant** | | | | | |
| 4 | Lead Sheet | | | | | |
| 5 | **Note: Base period data is historical information from the Company's Books and Records.** | | | | | |
| 6 | This schedule is sponsored by PNM Witness Gutierrez | | | | | |
| 7 | **A/C Number and Description** | **Adjusted Base Period Ending Balance** | **Linkage 7/31/2026** | **Linkage 8/31/2026** | **Linkage 9/30/2026** | **Linkage 10/31/2026** |
| 8 | 3-151001 Rio Bravo Fuel Oil **(Note 1)** | 1,071,035 | 1,071,035 | 1,071,035 | 1,071,035 | 1,071,035 |
| 9 | Total Fuel Stock | 1,071,035 | 1,071,035 | 1,071,035 | 1,071,035 | 1,071,035 |

| | A | U | V | W | X | Y |
|---|---|---|---|---|---|---|
| 1 | **Public Service Company of New Mexico** | | | | | |
| 2 | **Schedule E-3** | | | | | |
| 3 | **Fuel Inventories by Plant** | | | | | |
| 4 | Lead Sheet | | | | | |
| 5 | **Note: Base period data is historical information from the Company's Books and Records.** | | | | | |
| 6 | This schedule is sponsored by PNM Witness Gutierrez | | | | | |
| 7 | **A/C Number and Description** | **Linkage 11/30/2026** | **Linkage 12/31/2026** | **Linkage 1/31/2027** | **Linkage 2/28/2027** | **Linkage 3/31/2027** |
| 8 | 3-151001 Rio Bravo Fuel Oil **(Note 1)** | 1,071,035 | 1,071,035 | 1,071,035 | 1,071,035 | 1,071,035 |
| 9 | Total Fuel Stock | 1,071,035 | 1,071,035 | 1,071,035 | 1,071,035 | 1,071,035 |

| | A | Z | AA | AB | AC | AD |
|---|---|---|---|---|---|---|
| 1 | **Public Service Company of New Mexico** | | | | | |
| 2 | **Schedule E-3** | | | | | |
| 3 | **Fuel Inventories by Plant** | | | | | |
| 4 | Lead Sheet | | | | | |
| 5 | **Note: Base period data is historical information from the Company's Books and Records.** | | | | | |
| 6 | This schedule is sponsored by PNM Witness Gutierrez | | | | | |
| 7 | **A/C Number and Description** | **Linkage 4/30/2027** | **Linkage 5/31/2027** | **Linkage 6/30/2027** | **Linkage 7/31/2027** | **Linkage 8/31/2027** |
| 8 | 3-151001 Rio Bravo Fuel Oil **(Note 1)** | 1,071,035 | 1,071,035 | 1,071,035 | 1,071,035 | 1,071,035 |
| 9 | Total Fuel Stock | 1,071,035 | 1,071,035 | 1,071,035 | 1,071,035 | 1,071,035 |

| | A | AE | AF | AG | AH | AI |
|---|---|---|---|---|---|---|
| 1 | **Public Service Company of New Mexico** | | | | | |
| 2 | **Schedule E-3** | | | | | |
| 3 | **Fuel Inventories by Plant** | | | | | |
| 4 | Lead Sheet | | | | | |
| 5 | **Note: Base period data is historical information from the Company's Books and Records.** | | | | | |
| 6 | This schedule is sponsored by PNM Witness Gutierrez | | | | | |
| 7 | **A/C Number and Description** | **Linkage 9/30/2027** | **Test Period Balance 10/31/2027** | **Test Period Balance 11/30/2027** | **Test Period Balance 12/31/2027** | **Test Period Balance 1/31/2028** |
| 8 | 3-151001 Rio Bravo Fuel Oil **(Note 1)** | 1,071,035 | 1,071,035 | 1,071,035 | 1,071,035 | 1,071,035 |
| 9 | Total Fuel Stock | 1,071,035 | 1,071,035 | 1,071,035 | 1,071,035 | 1,071,035 |

| | A | AJ | AK | AL | AM | AN |
|---|---|---|---|---|---|---|
| 1 | **Public Service Company of New Mexico** | | | | | |
| 2 | **Schedule E-3** | | | | | |
| 3 | **Fuel Inventories by Plant** | | | | | |
| 4 | Lead Sheet | | | | | |
| 5 | **Note: Base period data is historical information from the Company's Books and Records.** | | | | | |
| 6 | This schedule is sponsored by PNM Witness Gutierrez | | | | | |
| 7 | **A/C Number and Description** | **Test Period Balance 2/29/2028** | **Test Period Balance 3/31/2028** | **Test Period Balance 4/30/2028** | **Test Period Balance 5/31/2028** | **Test Period Balance 6/30/2028** |
| 8 | 3-151001 Rio Bravo Fuel Oil **(Note 1)** | 1,071,035 | 1,071,035 | 1,071,035 | 1,071,035 | 1,071,035 |
| 9 | Total Fuel Stock | 1,071,035 | 1,071,035 | 1,071,035 | 1,071,035 | 1,071,035 |

| | A | AO | AP | AQ | AR | AS |
|---|---|---|---|---|---|---|
| 1 | **Public Service Company of New Mexico** | | | | | |
| 2 | **Schedule E-3** | | | | | |
| 3 | **Fuel Inventories by Plant** | | | | | |
| 4 | Lead Sheet | | | | | |
| 5 | **Note: Base period data is historical information from the Company's Books and Records.** | | | | | |
| 6 | This schedule is sponsored by PNM Witness Gutierrez | | | | | |
| 7 | **A/C Number and Description** | **Test Period Balance 7/31/2028** | **Test Period Balance 8/31/2028** | **Test Period Balance 9/30/2028** | **13-Month Average Balance** | **Adjusted Test Period Ending Balance** |
| 8 | 3-151001 Rio Bravo Fuel Oil **(Note 1)** | 1,071,035 | 1,071,035 | 1,071,035 | - | 1,071,035 |
| 9 | Total Fuel Stock | 1,071,035 | 1,071,035 | 1,071,035 | - | 1,071,035 |

| | A | B | C |
|---|---|---|---|
| 1 | **Public Service Company of New Mexico** | | |
| 2 | **Schedule E-3 Notes** | | |
| 3 | **Fuel Inventories by Plant** | | |
| 4 | Lead Sheet | | |
| 5 | This schedule is sponsored by PNM Witness Gutierrez | | |
| 6 | | | |
| 7 | **General Note:** PNM does not forecast changes to Rio Bravo Fuel Oil from the Base Period. Therefore, Test Period balances and Linkage data agree to the 13-month average calculated for the Base Period. | | |
| 8 | | | |
| 9 | | | |
| 10 | | | |

# PNM Schedule E-4

Amounts of working capital items charged to operating and maintenance expenses

| | A | B | C | D | E | F |
|---|---|---|---|---|---|---|
| 1 | **Public Service Company of New Mexico** | | | | | |
| 2 | **Schedule E-4** | | | | | |
| 3 | **Amounts of Working Capital Charged to O&M** | | | | | |
| 4 | **Base Period Ending 6/30/2026** | | | | | |
| 5 | **Test Period Ending 9/30/2028** | | | | | |
| 6 | **This schedule is sponsored by** | | | | | |
| 7 | **PNM Witness Gutierrez** | | | | | |
| 8 | | | | | | |
| 9 | **A/C Number and Description** | **Base Jul-25** | **Base Aug-25** | **Base Sep-25** | **Base Oct-25** | **Base Nov-25** |
| 10 | Account 151 - Fuel Stock | | | | | |
| 11 | Rio Bravo Oil (547400) | - | - | - | - | - |
| 12 | | | | | | |
| 13 | Account 154 - Materials and Supplies | | | | | |
| 14 | Electric Inventory | 42,451 | 31,936 | 31,755 | 52,083 | 28,586 |
| 15 | Minor Material Inventory (Electric) | 3,096 | 2,627 | 2,695 | 4,767 | 2,824 |
| 16 | Stores Issues/Returns (Co 3 Bulk) | - | - | - | - | - |
| 17 | Four Corners M&S (154000-715) | 118,131 | 118,131 | 118,131 | 118,131 | 118,131 |
| 18 | Palo Verde M&S (154000-720) | 1,436,656 | 554,043 | 1,074,117 | 1,689,601 | 216,253 |
| 19 | | | | | | |
| 20 | Account 163 - Stores Expense | | | | | |
| 21 | Stores Expense (Electric) | 3,666 | 3,177 | 3,147 | 5,638 | 3,289 |
| 22 | Stores Expense (Co 3 Bulk) | - | - | - | - | - |

| | A | B | C | D | E | F |
|---|---|---|---|---|---|---|
| 1 | **Public Service Company of New Mexico** | | | | | |
| 2 | **Schedule E-4** | | | | | |
| 3 | **Amounts of Working Capital Charged to O&M** | | | | | |
| 4 | **Base Period Ending 6/30/2026** | | | | | |
| 5 | **Test Period Ending 9/30/2028** | | | | | |
| 6 | **This schedule is sponsored by** | | | | | |
| 7 | **PNM Witness Gutierrez** | | | | | |
| 8 | | | | | | |
| 9 | **A/C Number and Description** | **Base Jul-25** | **Base Aug-25** | **Base Sep-25** | **Base Oct-25** | **Base Nov-25** |
| 23 | | | | | | |
| 24 | Account 165 - Prepayments | | | | | |
| 25 | 2-165000-650 Prepaid ROW | 161,386 | 161,386 | 161,386 | 161,386 | 161,386 |
| 26 | 2-165000-650 Prepaid Equipment Lease | 30,908 | 30,908 | 30,908 | 30,908 | 30,908 |
| 27 | 2-165000-650 Prepaid Software | 3,892 | 3,892 | 3,892 | 3,892 | 3,892 |
| 28 | 3-165000-046 Prepaid Air permit | 6,115 | 6,334 | 6,334 | 6,334 | 6,334 |
| 29 | 3-165000-713 Prepaid Air Permit | 36,590 | 37,899 | 37,899 | 37,899 | 37,899 |
| 30 | 1-165000-100 Prepaid Joint Pole use | 18,221 | 18,221 | 18,221 | 18,221 | 18,221 |
| 31 | 3-165000-715 Prepaid FC Lease | 17,467 | 17,871 | 17,871 | 17,871 | 17,871 |
| 32 | 3-165000-724 Prepaid PV Software | 21,372 | 18,123 | 14,630 | 17,410 | 16,166 |
| 33 | 3-165000-720 Prepaid PV Invoices | 69,671 | 69,898 | 70,894 | 65,399 | 65,399 |
| 34 | 1-165025-010 Prepaid Ins-electric | 1,186,456 | 1,108,047 | 1,181,878 | 1,181,975 | 1,181,975 |
| 35 | 6-165025-174 Prepaid Ins-Gen Mgmt | 56,690 | 52,199 | 56,129 | 56,052 | 56,052 |
| 36 | 2-165025-650 Prepaid Ins-transmission | 111,381 | 110,024 | 111,083 | 110,913 | 110,913 |
| 37 | 2-165025-676 Prepaid Ins SJ Switchyard | 59 | 59 | 59 | 58 | 58 |
| 38 | 3-165025-046 Prepaid Ins Rio Bravo | 25,474 | 25,483 | 25,474 | 25,309 | 25,309 |

| | A | B | C | D | E | F |
|---|---|---|---|---|---|---|
| 1 | **Public Service Company of New Mexico** | | | | | |
| 2 | **Schedule E-4** | | | | | |
| 3 | **Amounts of Working Capital Charged to O&M** | | | | | |
| 4 | **Base Period Ending 6/30/2026** | | | | | |
| 5 | **Test Period Ending 9/30/2028** | | | | | |
| 6 | **This schedule is sponsored by** | | | | | |
| 7 | **PNM Witness Gutierrez** | | | | | |
| 8 | | | | | | |
| 9 | **A/C Number and Description** | **Base Jul-25** | **Base Aug-25** | **Base Sep-25** | **Base Oct-25** | **Base Nov-25** |
| 39 | 3-165025-357 Prepaid Ins Aztec | 699 | 699 | 699 | 679 | 679 |
| 40 | 3-165025-700 Prepaid Ins Bulk | 21,580 | 14,259 | 20,373 | 20,373 | 20,373 |
| 41 | 3-165025-702 Prepaid Ins Afton | 46,579 | 46,601 | 46,579 | 45,860 | 46,150 |
| 42 | 3-165025-703 Prepaid Ins Lordsburg | 11,274 | 11,276 | 11,274 | 11,178 | 11,178 |
| 43 | 3-165025-713 Prepaid Ins Reeves | 22,977 | 22,984 | 22,977 | 22,718 | 22,718 |
| 44 | 3-165025-716 Prepaid Ins Algodones | 827 | 827 | 827 | 809 | 809 |
| 45 | 3-165025-744 Prepaid Ins Luna | 27,119 | 27,124 | 27,119 | 26,848 | 26,848 |
| 46 | 3-165025-751 Prepaid Ins Solar energy | 10,996 | 10,997 | 10,996 | 12,095 | 10,714 |
| 47 | 3-165025-752 Prepaid Ins La Luz | 5,633 | 5,634 | 5,633 | 5,560 | 5,560 |
| 48 | 3-165025-755 Prepaid Ins Solar renewable | 30,183 | 30,187 | 30,183 | 29,338 | 29,338 |
| 49 | 3-165025-737 Prepaid Ins Batteries | 1,962 | 1,962 | 1,962 | 1,870 | 1,870 |
| 50 | 3-165025-715 Prepaid Ins FC | 63,787 | 61,420 | 72,606 | 63,787 | 63,787 |
| 51 | 3-165025-789 Prepaid Ins San Juan | - | - | - | - | - |
| 52 | 3-165025-720 PV Prepaid Insurance | 88,715 | 88,715 | 87,818 | 88,715 | 88,715 |
| 53 | 3-165100-720 Prepaid Water Rights-PV | 4,589 | 4,589 | 4,589 | 4,589 | 4,589 |
| 54 | Grand Total | 3,686,600 | 2,697,531 | 3,310,136 | 3,938,267 | 2,434,795 |

| | A | G | H | I | J | K |
|---|---|---|---|---|---|---|
| 1 | **Public Service Company of New Mexico** | | | | | |
| 2 | **Schedule E-4** | | | | | |
| 3 | **Amounts of Working Capital Charged to O&M** | | | | | |
| 4 | **Base Period Ending 6/30/2026** | | | | | |
| 5 | **Test Period Ending 9/30/2028** | | | | | |
| 6 | **This schedule is sponsored by** | | | | | |
| 7 | **PNM Witness Gutierrez** | | | | | |
| 8 | | | | | | |
| 9 | **A/C Number and Description** | **Base Dec-25** | **Base Jan-26** | **Base Feb-26** | **Base Mar-26** | **Base Apr-26** |
| 10 | Account 151 - Fuel Stock | | | | | |
| 11 | Rio Bravo Oil (547400) | 220 | 2,005 | - | 831 | 69,120 |
| 12 | | | | | | |
| 13 | Account 154 - Materials and Supplies | | | | | |
| 14 | Electric Inventory | 13,004 | 17,330 | 36,674 | 13,618 | 39,843 |
| 15 | Minor Material Inventory (Electric) | 938 | 1,911 | 6,015 | 1,418 | 2,825 |
| 16 | Stores Issues/Returns (Co 3 Bulk) | - | - | - | - | - |
| 17 | Four Corners M&S (154000-715) | 118,131 | 118,131 | 118,131 | 118,131 | 118,131 |
| 18 | Palo Verde M&S (154000-720) | 94,313 | 395,798 | 664,429 | 818,956 | 1,378,958 |
| 19 | | | | | | |
| 20 | Account 163 - Stores Expense | | | | | |
| 21 | Stores Expense (Electric) | 938 | 2,450 | 8,919 | 2,597 | 3,424 |
| 22 | Stores Expense (Co 3 Bulk) | - | - | - | - | - |

| | A | G | H | I | J | K |
|---|---|---|---|---|---|---|
| 1 | **Public Service Company of New Mexico** | | | | | |
| 2 | **Schedule E-4** | | | | | |
| 3 | **Amounts of Working Capital Charged to O&M** | | | | | |
| 4 | **Base Period Ending 6/30/2026** | | | | | |
| 5 | **Test Period Ending 9/30/2028** | | | | | |
| 6 | **This schedule is sponsored by** | | | | | |
| 7 | **PNM Witness Gutierrez** | | | | | |
| 8 | | | | | | |
| 9 | **A/C Number and Description** | **Base Dec-25** | **Base Jan-26** | **Base Feb-26** | **Base Mar-26** | **Base Apr-26** |
| 23 | | | | | | |
| 24 | Account 165 - Prepayments | | | | | |
| 25 | 2-165000-650 Prepaid ROW | 161,386 | 161,386 | 161,386 | 161,386 | 185,311 |
| 26 | 2-165000-650 Prepaid Equipment Lease | 30,908 | - | 61,816 | 30,908 | - |
| 27 | 2-165000-650 Prepaid Software | 3,892 | 3,892 | 3,892 | 3,892 | 3,892 |
| 28 | 3-165000-046 Prepaid Air permit | 6,334 | 6,334 | 6,334 | 6,334 | 6,334 |
| 29 | 3-165000-713 Prepaid Air Permit | 37,899 | 37,899 | 37,899 | 37,899 | 37,899 |
| 30 | 1-165000-100 Prepaid Joint Pole use | 18,221 | 17,595 | 17,595 | 17,595 | 17,595 |
| 31 | 3-165000-715 Prepaid FC Lease | 17,871 | 17,871 | 17,871 | 17,871 | 17,871 |
| 32 | 3-165000-724 Prepaid PV Software | 19,292 | 15,644 | 15,817 | 15,817 | 16,068 |
| 33 | 3-165000-720 Prepaid PV Invoices | 252,003 | 59,579 | 57,450 | 181,036 | 50,852 |
| 34 | 1-165025-010 Prepaid Ins-electric | 1,181,975 | 1,181,155 | 1,180,485 | 1,031,709 | 1,261,340 |
| 35 | 6-165025-174 Prepaid Ins-Gen Mgmt | 56,052 | 56,004 | 55,982 | 49,869 | 59,306 |
| 36 | 2-165025-650 Prepaid Ins-transmission | 110,913 | 110,971 | 110,959 | 108,299 | 112,405 |
| 37 | 2-165025-676 Prepaid Ins SJ Switchyard | 58 | 58 | 58 | 58 | 58 |
| 38 | 3-165025-046 Prepaid Ins Rio Bravo | 25,344 | 25,309 | 25,309 | 24,349 | 25,309 |

| | A | G | H | I | J | K |
|---|---|---|---|---|---|---|
| 1 | **Public Service Company of New Mexico** | | | | | |
| 2 | **Schedule E-4** | | | | | |
| 3 | **Amounts of Working Capital Charged to O&M** | | | | | |
| 4 | **Base Period Ending 6/30/2026** | | | | | |
| 5 | **Test Period Ending 9/30/2028** | | | | | |
| 6 | **This schedule is sponsored by** | | | | | |
| 7 | **PNM Witness Gutierrez** | | | | | |
| 8 | | | | | | |
| 9 | **A/C Number and Description** | **Base Dec-25** | **Base Jan-26** | **Base Feb-26** | **Base Mar-26** | **Base Apr-26** |
| 39 | 3-165025-357 Prepaid Ins Aztec | 679 | 679 | 679 | 679 | 679 |
| 40 | 3-165025-700 Prepaid Ins Bulk | 20,373 | 19,618 | 19,565 | 12,748 | 26,381 |
| 41 | 3-165025-702 Prepaid Ins Afton | 46,150 | 46,150 | 46,150 | 44,904 | 46,150 |
| 42 | 3-165025-703 Prepaid Ins Lordsburg | 11,178 | 11,178 | 11,178 | 10,880 | 11,178 |
| 43 | 3-165025-713 Prepaid Ins Reeves | 22,718 | 22,718 | 22,718 | 22,300 | 22,718 |
| 44 | 3-165025-716 Prepaid Ins Algodones | 809 | 809 | 809 | 809 | 809 |
| 45 | 3-165025-744 Prepaid Ins Luna | 26,848 | 26,848 | 26,848 | 26,215 | 26,848 |
| 46 | 3-165025-751 Prepaid Ins Solar energy | 10,714 | 10,714 | 10,714 | 10,477 | 10,714 |
| 47 | 3-165025-752 Prepaid Ins La Luz | 5,560 | 5,560 | 5,560 | 5,543 | 5,560 |
| 48 | 3-165025-755 Prepaid Ins Solar renewable | 29,338 | 29,338 | 29,338 | 28,693 | 29,338 |
| 49 | 3-165025-737 Prepaid Ins Batteries | 1,870 | 1,870 | 1,870 | 1,870 | 1,870 |
| 50 | 3-165025-715 Prepaid Ins FC | 63,787 | 23,184 | 23,184 | 23,184 | 23,184 |
| 51 | 3-165025-789 Prepaid Ins San Juan | - | - | - | - | - |
| 52 | 3-165025-720 PV Prepaid Insurance | 88,715 | 62,194 | 62,194 | 62,194 | 62,459 |
| 53 | 3-165100-720 Prepaid Water Rights-PV | 4,589 | 4,589 | 4,589 | 4,589 | 4,589 |
| 54 | Grand Total | 2,483,020 | 2,496,768 | 2,852,414 | 2,897,656 | 3,679,017 |

| | A | L | M | N | O | P |
|---|---|---|---|---|---|---|
| 1 | **Public Service Company of New Mexico** | | | | | |
| 2 | **Schedule E-4** | | | | | |
| 3 | **Amounts of Working Capital Charged to O&M** | | | | | |
| 4 | **Base Period Ending 6/30/2026** | | | | | |
| 5 | **Test Period Ending 9/30/2028** | | | | | |
| 6 | **This schedule is sponsored by** | | | | | |
| 7 | **PNM Witness Gutierrez** | | | | | |
| 8 | | | | | | |
| 9 | **A/C Number and Description** | **Base May-26** | **Base Jun-26** | **Total Base Period** | **Linkage Jul-26** | **Linkage Aug-26** |
| 10 | Account 151 - Fuel Stock | | | | | |
| 11 | Rio Bravo Oil (547400) | 13,395 | 5,269 | 90,840 | - | - |
| 12 | | | | | | |
| 13 | Account 154 - Materials and Supplies | | | | | |
| 14 | Electric Inventory | 22,683 | 34,918 | 364,882 | 42,451 | 31,936 |
| 15 | Minor Material Inventory (Electric) | 2,957 | 4,838 | 36,911 | 3,096 | 2,627 |
| 16 | Stores Issues/Returns (Co 3 Bulk) | - | - | - | - | - |
| 17 | Four Corners M&S (154000-715) | 118,131 | 118,131 | 1,417,570 | 118,131 | 118,131 |
| 18 | Palo Verde M&S (154000-720) | 288,777 | 360,823 | 8,972,720 | 1,436,656 | 554,043 |
| 19 | | | | | | |
| 20 | Account 163 - Stores Expense | | | | | |
| 21 | Stores Expense (Electric) | 3,600 | 5,844 | 46,690 | 3,666 | 3,177 |
| 22 | Stores Expense (Co 3 Bulk) | - | - | - | - | - |

| | A | L | M | N | O | P |
|---|---|---|---|---|---|---|
| 1 | **Public Service Company of New Mexico** | | | | | |
| 2 | **Schedule E-4** | | | | | |
| 3 | **Amounts of Working Capital Charged to O&M** | | | | | |
| 4 | **Base Period Ending 6/30/2026** | | | | | |
| 5 | **Test Period Ending 9/30/2028** | | | | | |
| 6 | **This schedule is sponsored by** | | | | | |
| 7 | **PNM Witness Gutierrez** | | | | | |
| 8 | | | | | | |
| 9 | **A/C Number and Description** | **Base May-26** | **Base Jun-26** | **Total Base Period** | **Linkage Jul-26** | **Linkage Aug-26** |
| 23 | | | | | | |
| 24 | Account 165 - Prepayments | | | | | |
| 25 | 2-165000-650 Prepaid ROW | 185,311 | 185,311 | 2,008,404 | 185,311 | 185,311 |
| 26 | 2-165000-650 Prepaid Equipment Lease | - | 35,906 | 314,077 | 30,908 | 30,908 |
| 27 | 2-165000-650 Prepaid Software | 3,892 | 3,892 | 46,700 | 3,892 | 3,892 |
| 28 | 3-165000-046 Prepaid Air permit | 6,334 | 6,334 | 75,789 | 6,115 | 6,334 |
| 29 | 3-165000-713 Prepaid Air Permit | 37,899 | 37,894 | 453,474 | 36,590 | 37,899 |
| 30 | 1-165000-100 Prepaid Joint Pole use | 17,595 | 17,595 | 214,896 | 18,221 | 18,221 |
| 31 | 3-165000-715 Prepaid FC Lease | 17,871 | 17,871 | 214,043 | 17,467 | 17,871 |
| 32 | 3-165000-724 Prepaid PV Software | 16,082 | 15,663 | 202,085 | 21,372 | 18,123 |
| 33 | 3-165000-720 Prepaid PV Invoices | 50,852 | 50,852 | 1,043,886 | 69,671 | 69,898 |
| 34 | 1-165025-010 Prepaid Ins-electric | 1,180,539 | 405,938 | 13,263,473 | 1,186,456 | 1,108,047 |
| 35 | 6-165025-174 Prepaid Ins-Gen Mgmt | 55,984 | 23,175 | 633,497 | 56,690 | 52,199 |
| 36 | 2-165025-650 Prepaid Ins-transmission | 110,960 | 105,551 | 1,324,372 | 111,381 | 110,024 |
| 37 | 2-165025-676 Prepaid Ins SJ Switchyard | 58 | 58 | 696 | 59 | 59 |
| 38 | 3-165025-046 Prepaid Ins Rio Bravo | 25,309 | 19,363 | 297,342 | 25,474 | 25,483 |

| | A | L | M | N | O | P |
|---|---|---|---|---|---|---|
| 1 | **Public Service Company of New Mexico** | | | | | |
| 2 | **Schedule E-4** | | | | | |
| 3 | **Amounts of Working Capital Charged to O&M** | | | | | |
| 4 | **Base Period Ending 6/30/2026** | | | | | |
| 5 | **Test Period Ending 9/30/2028** | | | | | |
| 6 | **This schedule is sponsored by** | | | | | |
| 7 | **PNM Witness Gutierrez** | | | | | |
| 8 | | | | | | |
| 9 | **A/C Number and Description** | **Base May-26** | **Base Jun-26** | **Total Base Period** | **Linkage Jul-26** | **Linkage Aug-26** |
| 39 | 3-165025-357 Prepaid Ins Aztec | 679 | 690 | 8,223 | 699 | 699 |
| 40 | 3-165025-700 Prepaid Ins Bulk | 19,568 | 6,629 | 221,841 | 21,580 | 14,259 |
| 41 | 3-165025-702 Prepaid Ins Afton | 46,150 | 40,333 | 547,753 | 46,579 | 46,601 |
| 42 | 3-165025-703 Prepaid Ins Lordsburg | 11,177 | 8,390 | 131,336 | 11,274 | 11,276 |
| 43 | 3-165025-713 Prepaid Ins Reeves | 22,718 | 20,875 | 271,141 | 22,977 | 22,984 |
| 44 | 3-165025-716 Prepaid Ins Algodones | 809 | 635 | 9,586 | 827 | 827 |
| 45 | 3-165025-744 Prepaid Ins Luna | 26,848 | 20,992 | 316,505 | 27,119 | 27,124 |
| 46 | 3-165025-751 Prepaid Ins Solar energy | 10,714 | 10,108 | 129,953 | 10,996 | 10,997 |
| 47 | 3-165025-752 Prepaid Ins La Luz | 5,560 | 5,279 | 66,641 | 5,633 | 5,634 |
| 48 | 3-165025-755 Prepaid Ins Solar renewable | 29,338 | 28,793 | 353,407 | 30,183 | 30,187 |
| 49 | 3-165025-737 Prepaid Ins Batteries | 1,870 | 1,900 | 22,747 | 1,962 | 1,962 |
| 50 | 3-165025-715 Prepaid Ins FC | 23,184 | 23,184 | 528,278 | 63,787 | 61,420 |
| 51 | 3-165025-789 Prepaid Ins San Juan | - | - | - | - | - |
| 52 | 3-165025-720 PV Prepaid Insurance | 62,459 | 62,459 | 905,354 | 88,715 | 88,715 |
| 53 | 3-165100-720 Prepaid Water Rights-PV | 4,589 | 4,589 | 55,068 | 4,589 | 4,589 |
| 54 | Grand Total | 2,423,892 | 1,690,081 | 34,590,178 | 3,710,525 | 2,721,457 |

| | A | Q | R | S | T | U |
|---|---|---|---|---|---|---|
| 1 | **Public Service Company of New Mexico** | | | | | |
| 2 | **Schedule E-4** | | | | | |
| 3 | **Amounts of Working Capital Charged to O&M** | | | | | |
| 4 | **Base Period Ending 6/30/2026** | | | | | |
| 5 | **Test Period Ending 9/30/2028** | | | | | |
| 6 | **This schedule is sponsored by** | | | | | |
| 7 | **PNM Witness Gutierrez** | | | | | |
| 8 | | | | | | |
| 9 | **A/C Number and Description** | **Linkage Sep-26** | **Linkage Oct-26** | **Linkage Nov-26** | **Linkage Dec-26** | **Linkage Jan-27** |
| 10 | Account 151 - Fuel Stock | | | | | |
| 11 | Rio Bravo Oil (547400) | - | - | - | - | - |
| 12 | | | | | | |
| 13 | Account 154 - Materials and Supplies | | | | | |
| 14 | Electric Inventory | 31,755 | 52,083 | 28,586 | 13,004 | 17,330 |
| 15 | Minor Material Inventory (Electric) | 2,695 | 4,767 | 2,824 | 938 | 1,911 |
| 16 | Stores Issues/Returns (Co 3 Bulk) | - | - | - | - | - |
| 17 | Four Corners M&S (154000-715) | 118,131 | 118,131 | 118,131 | 118,131 | 118,131 |
| 18 | Palo Verde M&S (154000-720) | 1,074,117 | 1,689,601 | 216,253 | 94,313 | 395,798 |
| 19 | | | | | | |
| 20 | Account 163 - Stores Expense | | | | | |
| 21 | Stores Expense (Electric) | 3,147 | 5,638 | 3,289 | 938 | 2,450 |
| 22 | Stores Expense (Co 3 Bulk) | - | - | - | - | - |

| | A | Q | R | S | T | U |
|---|---|---|---|---|---|---|
| 1 | **Public Service Company of New Mexico** | | | | | |
| 2 | **Schedule E-4** | | | | | |
| 3 | **Amounts of Working Capital Charged to O&M** | | | | | |
| 4 | **Base Period Ending 6/30/2026** | | | | | |
| 5 | **Test Period Ending 9/30/2028** | | | | | |
| 6 | **This schedule is sponsored by** | | | | | |
| 7 | **PNM Witness Gutierrez** | | | | | |
| 8 | | | | | | |
| 9 | **A/C Number and Description** | **Linkage Sep-26** | **Linkage Oct-26** | **Linkage Nov-26** | **Linkage Dec-26** | **Linkage Jan-27** |
| 23 | | | | | | |
| 24 | Account 165 - Prepayments | | | | | |
| 25 | 2-165000-650 Prepaid ROW | 185,311 | 185,311 | 185,311 | 185,311 | 185,311 |
| 26 | 2-165000-650 Prepaid Equipment Lease | 30,908 | 30,908 | 30,908 | 30,908 | - |
| 27 | 2-165000-650 Prepaid Software | 3,892 | 3,892 | 3,892 | 3,892 | 3,892 |
| 28 | 3-165000-046 Prepaid Air permit | 6,334 | 6,334 | 6,334 | 6,334 | 6,334 |
| 29 | 3-165000-713 Prepaid Air Permit | 37,899 | 37,899 | 37,899 | 37,899 | 37,899 |
| 30 | 1-165000-100 Prepaid Joint Pole use | 18,221 | 18,221 | 18,221 | 18,221 | 17,595 |
| 31 | 3-165000-715 Prepaid FC Lease | 17,871 | 17,871 | 17,871 | 17,871 | 17,871 |
| 32 | 3-165000-724 Prepaid PV Software | 14,630 | 17,410 | 16,166 | 19,292 | 15,644 |
| 33 | 3-165000-720 Prepaid PV Invoices | 70,894 | 65,399 | 65,399 | 252,003 | 59,579 |
| 34 | 1-165025-010 Prepaid Ins-electric | 1,181,878 | 1,181,975 | 1,181,975 | 1,181,975 | 1,181,155 |
| 35 | 6-165025-174 Prepaid Ins-Gen Mgmt | 56,129 | 56,052 | 56,052 | 56,052 | 56,004 |
| 36 | 2-165025-650 Prepaid Ins-transmission | 111,083 | 110,913 | 110,913 | 110,913 | 110,971 |
| 37 | 2-165025-676 Prepaid Ins SJ Switchyard | 59 | 58 | 58 | 58 | 58 |
| 38 | 3-165025-046 Prepaid Ins Rio Bravo | 25,474 | 25,309 | 25,309 | 25,344 | 25,309 |

| | A | Q | R | S | T | U |
|---|---|---|---|---|---|---|
| 1 | **Public Service Company of New Mexico** | | | | | |
| 2 | **Schedule E-4** | | | | | |
| 3 | **Amounts of Working Capital Charged to O&M** | | | | | |
| 4 | **Base Period Ending 6/30/2026** | | | | | |
| 5 | **Test Period Ending 9/30/2028** | | | | | |
| 6 | **This schedule is sponsored by** | | | | | |
| 7 | **PNM Witness Gutierrez** | | | | | |
| 8 | | | | | | |
| 9 | **A/C Number and Description** | **Linkage Sep-26** | **Linkage Oct-26** | **Linkage Nov-26** | **Linkage Dec-26** | **Linkage Jan-27** |
| 39 | 3-165025-357 Prepaid Ins Aztec | 699 | 679 | 679 | 679 | 679 |
| 40 | 3-165025-700 Prepaid Ins Bulk | 20,373 | 20,373 | 20,373 | 20,373 | 19,618 |
| 41 | 3-165025-702 Prepaid Ins Afton | 46,579 | 45,860 | 46,150 | 46,150 | 46,150 |
| 42 | 3-165025-703 Prepaid Ins Lordsburg | 11,274 | 11,178 | 11,178 | 11,178 | 11,178 |
| 43 | 3-165025-713 Prepaid Ins Reeves | 22,977 | 22,718 | 22,718 | 22,718 | 22,718 |
| 44 | 3-165025-716 Prepaid Ins Algodones | 827 | 809 | 809 | 809 | 809 |
| 45 | 3-165025-744 Prepaid Ins Luna | 27,119 | 26,848 | 26,848 | 26,848 | 26,848 |
| 46 | 3-165025-751 Prepaid Ins Solar energy | 10,996 | 12,095 | 10,714 | 10,714 | 10,714 |
| 47 | 3-165025-752 Prepaid Ins La Luz | 5,633 | 5,560 | 5,560 | 5,560 | 5,560 |
| 48 | 3-165025-755 Prepaid Ins Solar renewable | 30,183 | 29,338 | 29,338 | 29,338 | 29,338 |
| 49 | 3-165025-737 Prepaid Ins Batteries | 1,962 | 1,870 | 1,870 | 1,870 | 1,870 |
| 50 | 3-165025-715 Prepaid Ins FC | 72,606 | 63,787 | 63,787 | 63,787 | 23,184 |
| 51 | 3-165025-789 Prepaid Ins San Juan | - | - | - | - | - |
| 52 | 3-165025-720 PV Prepaid Insurance | 87,818 | 88,715 | 88,715 | 88,715 | 62,194 |
| 53 | 3-165100-720 Prepaid Water Rights-PV | 4,589 | 4,589 | 4,589 | 4,589 | 4,589 |
| 54 | Grand Total | 3,334,062 | 3,962,193 | 2,458,721 | 2,506,726 | 2,518,689 |

| | A | V | W | X | Y | Z |
|---|---|---|---|---|---|---|
| 1 | **Public Service Company of New Mexico** | | | | | |
| 2 | **Schedule E-4** | | | | | |
| 3 | **Amounts of Working Capital Charged to O&M** | | | | | |
| 4 | **Base Period Ending 6/30/2026** | | | | | |
| 5 | **Test Period Ending 9/30/2028** | | | | | |
| 6 | **This schedule is sponsored by** | | | | | |
| 7 | **PNM Witness Gutierrez** | | | | | |
| 8 | | | | | | |
| 9 | **A/C Number and Description** | **Linkage Feb-27** | **Linkage Mar-27** | **Linkage Apr-27** | **Linkage May-27** | **Linkage Jun-27** |
| 10 | Account 151 - Fuel Stock | | | | | |
| 11 | Rio Bravo Oil (547400) | - | - | - | - | - |
| 12 | | | | | | |
| 13 | Account 154 - Materials and Supplies | | | | | |
| 14 | Electric Inventory | 36,674 | 13,618 | 39,843 | 22,683 | 34,918 |
| 15 | Minor Material Inventory (Electric) | 6,015 | 1,418 | 2,825 | 2,957 | 4,838 |
| 16 | Stores Issues/Returns (Co 3 Bulk) | - | - | - | - | - |
| 17 | Four Corners M&S (154000-715) | 118,131 | 118,131 | 118,131 | 118,131 | 118,131 |
| 18 | Palo Verde M&S (154000-720) | 664,429 | 818,956 | 1,378,958 | 288,777 | 360,823 |
| 19 | | | | | | |
| 20 | Account 163 - Stores Expense | | | | | |
| 21 | Stores Expense (Electric) | 8,919 | 2,597 | 3,424 | 3,600 | 5,844 |
| 22 | Stores Expense (Co 3 Bulk) | - | - | - | - | - |

| | A | V | W | X | Y | Z |
|---|---|---|---|---|---|---|
| 1 | **Public Service Company of New Mexico** | | | | | |
| 2 | **Schedule E-4** | | | | | |
| 3 | **Amounts of Working Capital Charged to O&M** | | | | | |
| 4 | **Base Period Ending 6/30/2026** | | | | | |
| 5 | **Test Period Ending 9/30/2028** | | | | | |
| 6 | **This schedule is sponsored by** | | | | | |
| 7 | **PNM Witness Gutierrez** | | | | | |
| 8 | | | | | | |
| 9 | **A/C Number and Description** | **Linkage Feb-27** | **Linkage Mar-27** | **Linkage Apr-27** | **Linkage May-27** | **Linkage Jun-27** |
| 23 | | | | | | |
| 24 | Account 165 - Prepayments | | | | | |
| 25 | 2-165000-650 Prepaid ROW | 185,311 | 185,311 | 281,413 | 281,413 | 281,413 |
| 26 | 2-165000-650 Prepaid Equipment Lease | 61,816 | 30,908 | - | - | 35,906 |
| 27 | 2-165000-650 Prepaid Software | 3,892 | 3,892 | 3,892 | 3,892 | 3,892 |
| 28 | 3-165000-046 Prepaid Air permit | 6,334 | 6,334 | 6,334 | 6,334 | 6,334 |
| 29 | 3-165000-713 Prepaid Air Permit | 37,899 | 37,899 | 37,899 | 37,899 | 37,894 |
| 30 | 1-165000-100 Prepaid Joint Pole use | 17,595 | 17,595 | 17,595 | 17,595 | 17,595 |
| 31 | 3-165000-715 Prepaid FC Lease | 17,871 | 17,871 | 17,871 | 17,871 | 17,871 |
| 32 | 3-165000-724 Prepaid PV Software | 15,817 | 15,817 | 16,068 | 16,082 | 15,663 |
| 33 | 3-165000-720 Prepaid PV Invoices | 57,450 | 181,036 | 50,852 | 50,852 | 50,852 |
| 34 | 1-165025-010 Prepaid Ins-electric | 1,180,485 | 1,031,709 | 1,261,340 | 1,180,539 | 405,938 |
| 35 | 6-165025-174 Prepaid Ins-Gen Mgmt | 55,982 | 49,869 | 59,306 | 55,984 | 23,175 |
| 36 | 2-165025-650 Prepaid Ins-transmission | 110,959 | 108,299 | 112,405 | 110,960 | 105,551 |
| 37 | 2-165025-676 Prepaid Ins SJ Switchyard | 58 | 58 | 58 | 58 | 58 |
| 38 | 3-165025-046 Prepaid Ins Rio Bravo | 25,309 | 24,349 | 25,309 | 25,309 | 19,363 |

| | A | V | W | X | Y | Z |
|---|---|---|---|---|---|---|
| 1 | **Public Service Company of New Mexico** | | | | | |
| 2 | **Schedule E-4** | | | | | |
| 3 | **Amounts of Working Capital Charged to O&M** | | | | | |
| 4 | **Base Period Ending 6/30/2026** | | | | | |
| 5 | **Test Period Ending 9/30/2028** | | | | | |
| 6 | **This schedule is sponsored by** | | | | | |
| 7 | **PNM Witness Gutierrez** | | | | | |
| 8 | | | | | | |
| 9 | **A/C Number and Description** | **Linkage Feb-27** | **Linkage Mar-27** | **Linkage Apr-27** | **Linkage May-27** | **Linkage Jun-27** |
| 39 | 3-165025-357 Prepaid Ins Aztec | 679 | 679 | 679 | 679 | 690 |
| 40 | 3-165025-700 Prepaid Ins Bulk | 19,565 | 12,748 | 26,381 | 19,568 | 6,629 |
| 41 | 3-165025-702 Prepaid Ins Afton | 46,150 | 44,904 | 46,150 | 46,150 | 40,333 |
| 42 | 3-165025-703 Prepaid Ins Lordsburg | 11,178 | 10,880 | 11,178 | 11,177 | 8,390 |
| 43 | 3-165025-713 Prepaid Ins Reeves | 22,718 | 22,300 | 22,718 | 22,718 | 20,875 |
| 44 | 3-165025-716 Prepaid Ins Algodones | 809 | 809 | 809 | 809 | 635 |
| 45 | 3-165025-744 Prepaid Ins Luna | 26,848 | 26,215 | 26,848 | 26,848 | 20,992 |
| 46 | 3-165025-751 Prepaid Ins Solar energy | 10,714 | 10,477 | 10,714 | 10,714 | 10,108 |
| 47 | 3-165025-752 Prepaid Ins La Luz | 5,560 | 5,543 | 5,560 | 5,560 | 5,279 |
| 48 | 3-165025-755 Prepaid Ins Solar renewable | 29,338 | 28,693 | 29,338 | 29,338 | 28,793 |
| 49 | 3-165025-737 Prepaid Ins Batteries | 1,870 | 1,870 | 1,870 | 1,870 | 1,900 |
| 50 | 3-165025-715 Prepaid Ins FC | 23,184 | 23,184 | 23,184 | 23,184 | 23,184 |
| 51 | 3-165025-789 Prepaid Ins San Juan | - | - | - | - | - |
| 52 | 3-165025-720 PV Prepaid Insurance | 62,194 | 62,194 | 62,459 | 62,459 | 62,459 |
| 53 | 3-165100-720 Prepaid Water Rights-PV | 4,589 | 4,589 | 4,589 | 4,589 | 4,589 |
| 54 | Grand Total | 2,876,340 | 2,920,751 | 3,705,998 | 2,506,599 | 1,780,913 |

| | A | AA | AB | AC | AD | AE |
|---|---|---|---|---|---|---|
| 1 | **Public Service Company of New Mexico** | | | | | |
| 2 | **Schedule E-4** | | | | | |
| 3 | **Amounts of Working Capital Charged to O&M** | | | | | |
| 4 | **Base Period Ending 6/30/2026** | | | | | |
| 5 | **Test Period Ending 9/30/2028** | | | | | |
| 6 | **This schedule is sponsored by** | | | | | |
| 7 | **PNM Witness Gutierrez** | | | | | |
| 8 | | | | | | |
| 9 | **A/C Number and Description** | **Linkage Jul-27** | **Linkage Aug-27** | **Linkage Sep-27** | **Total Linkage Jul-26 - Jun-27** | **Total Linkage Oct-26 - Sep-27** |
| 10 | Account 151 - Fuel Stock | | | | | |
| 11 | Rio Bravo Oil (547400) | - | - | - | - | - |
| 12 | | | | | | |
| 13 | Account 154 - Materials and Supplies | | | | | |
| 14 | Electric Inventory | 42,451 | 31,936 | 31,755 | 364,882 | 364,882 |
| 15 | Minor Material Inventory (Electric) | 3,096 | 2,627 | 2,695 | 36,911 | 36,911 |
| 16 | Stores Issues/Returns (Co 3 Bulk) | - | - | - | - | - |
| 17 | Four Corners M&S (154000-715) | 118,131 | 118,131 | 118,131 | 1,417,570 | 1,417,570 |
| 18 | Palo Verde M&S (154000-720) | 1,436,656 | 554,043 | 1,074,117 | 8,972,720 | 8,972,720 |
| 19 | | | | | | |
| 20 | Account 163 - Stores Expense | | | | | |
| 21 | Stores Expense (Electric) | 3,666 | 3,177 | 3,147 | 46,690 | 46,690 |
| 22 | Stores Expense (Co 3 Bulk) | - | - | - | - | - |

| | A | AA | AB | AC | AD | AE |
|---|---|---|---|---|---|---|
| 1 | **Public Service Company of New Mexico** | | | | | |
| 2 | **Schedule E-4** | | | | | |
| 3 | **Amounts of Working Capital Charged to O&M** | | | | | |
| 4 | **Base Period Ending 6/30/2026** | | | | | |
| 5 | **Test Period Ending 9/30/2028** | | | | | |
| 6 | **This schedule is sponsored by** | | | | | |
| 7 | **PNM Witness Gutierrez** | | | | | |
| 8 | | | | | | |
| 9 | **A/C Number and Description** | **Linkage Jul-27** | **Linkage Aug-27** | **Linkage Sep-27** | **Total Linkage Jul-26 - Jun-27** | **Total Linkage Oct-26 - Sep-27** |
| 23 | | | | | | |
| 24 | Account 165 - Prepayments | | | | | |
| 25 | 2-165000-650 Prepaid ROW | 281,413 | 281,413 | 281,413 | 2,512,041 | 2,800,346 |
| 26 | 2-165000-650 Prepaid Equipment Lease | 30,908 | 30,908 | 30,908 | 314,077 | 314,077 |
| 27 | 2-165000-650 Prepaid Software | 3,892 | 3,892 | 3,892 | 46,700 | 46,700 |
| 28 | 3-165000-046 Prepaid Air permit | 6,115 | 6,334 | 6,334 | 75,789 | 75,789 |
| 29 | 3-165000-713 Prepaid Air Permit | 36,590 | 37,899 | 37,899 | 453,474 | 453,474 |
| 30 | 1-165000-100 Prepaid Joint Pole use | 18,221 | 18,221 | 18,221 | 214,896 | 214,896 |
| 31 | 3-165000-715 Prepaid FC Lease | 17,467 | 17,871 | 17,871 | 214,043 | 214,043 |
| 32 | 3-165000-724 Prepaid PV Software | 21,372 | 18,123 | 14,630 | 202,085 | 202,085 |
| 33 | 3-165000-720 Prepaid PV Invoices | 69,671 | 69,898 | 70,894 | 1,043,886 | 1,043,886 |
| 34 | 1-165025-010 Prepaid Ins-electric | 1,186,456 | 1,108,047 | 1,181,878 | 13,263,473 | 13,263,473 |
| 35 | 6-165025-174 Prepaid Ins-Gen Mgmt | 56,690 | 52,199 | 56,129 | 633,497 | 633,497 |
| 36 | 2-165025-650 Prepaid Ins-transmission | 111,381 | 110,024 | 111,083 | 1,324,372 | 1,324,372 |
| 37 | 2-165025-676 Prepaid Ins SJ Switchyard | 59 | 59 | 59 | 696 | 696 |
| 38 | 3-165025-046 Prepaid Ins Rio Bravo | 25,474 | 25,483 | 25,474 | 297,342 | 297,342 |

| | A | AA | AB | AC | AD | AE |
|---|---|---|---|---|---|---|
| 1 | **Public Service Company of New Mexico** | | | | | |
| 2 | **Schedule E-4** | | | | | |
| 3 | **Amounts of Working Capital Charged to O&M** | | | | | |
| 4 | **Base Period Ending 6/30/2026** | | | | | |
| 5 | **Test Period Ending 9/30/2028** | | | | | |
| 6 | **This schedule is sponsored by** | | | | | |
| 7 | **PNM Witness Gutierrez** | | | | | |
| 8 | | | | | | |
| 9 | **A/C Number and Description** | **Linkage Jul-27** | **Linkage Aug-27** | **Linkage Sep-27** | **Total Linkage Jul-26 - Jun-27** | **Total Linkage Oct-26 - Sep-27** |
| 39 | 3-165025-357 Prepaid Ins Aztec | 699 | 699 | 699 | 8,223 | 8,223 |
| 40 | 3-165025-700 Prepaid Ins Bulk | 21,580 | 14,259 | 20,373 | 221,841 | 221,841 |
| 41 | 3-165025-702 Prepaid Ins Afton | 46,579 | 46,601 | 46,579 | 547,753 | 547,753 |
| 42 | 3-165025-703 Prepaid Ins Lordsburg | 11,274 | 11,276 | 11,274 | 131,336 | 131,336 |
| 43 | 3-165025-713 Prepaid Ins Reeves | 22,977 | 22,984 | 22,977 | 271,141 | 271,141 |
| 44 | 3-165025-716 Prepaid Ins Algodones | 827 | 827 | 827 | 9,586 | 9,586 |
| 45 | 3-165025-744 Prepaid Ins Luna | 27,119 | 27,124 | 27,119 | 316,505 | 316,505 |
| 46 | 3-165025-751 Prepaid Ins Solar energy | 10,996 | 10,997 | 10,996 | 129,953 | 129,953 |
| 47 | 3-165025-752 Prepaid Ins La Luz | 5,633 | 5,634 | 5,633 | 66,641 | 66,641 |
| 48 | 3-165025-755 Prepaid Ins Solar renewable | 30,183 | 30,187 | 30,183 | 353,407 | 353,407 |
| 49 | 3-165025-737 Prepaid Ins Batteries | 1,962 | 1,962 | 1,962 | 22,747 | 22,747 |
| 50 | 3-165025-715 Prepaid Ins FC | 63,787 | 61,420 | 72,606 | 528,278 | 528,278 |
| 51 | 3-165025-789 Prepaid Ins San Juan | - | - | - | - | - |
| 52 | 3-165025-720 PV Prepaid Insurance | 88,715 | 88,715 | 87,818 | 905,354 | 905,354 |
| 53 | 3-165100-720 Prepaid Water Rights-PV | 4,589 | 4,589 | 4,589 | 55,068 | 55,068 |
| 54 | Grand Total | 3,806,627 | 2,817,558 | 3,430,164 | 35,002,975 | 35,291,280 |

| | A | AF | AG | AH |
|---|---|---|---|---|
| 1 | **Public Service Company of New Mexico** | | | |
| 2 | **Schedule E-4** | | | |
| 3 | **Amounts of Working Capital Charged to O&M** | | | |
| 4 | **Base Period Ending 6/30/2026** | | | |
| 5 | **Test Period Ending 9/30/2028** | | | |
| 6 | **This schedule is sponsored by** | | | |
| 7 | **PNM Witness Gutierrez** | | | |
| 8 | | | | |
| 9 | **A/C Number and Description** | **Linkage Reference** | **Test Period Oct-27** | **Test Period Nov-27** |
| 10 | Account 151 - Fuel Stock | | | |
| 11 | Rio Bravo Oil (547400) | | - | - |
| 12 | | | | |
| 13 | Account 154 - Materials and Supplies | | | |
| 14 | Electric Inventory | | 52,083 | 28,586 |
| 15 | Minor Material Inventory (Electric) | | 4,767 | 2,824 |
| 16 | Stores Issues/Returns (Co 3 Bulk) | | - | - |
| 17 | Four Corners M&S (154000-715) | | 118,131 | 118,131 |
| 18 | Palo Verde M&S (154000-720) | | 1,689,601 | 216,253 |
| 19 | | | | |
| 20 | Account 163 - Stores Expense | | | |
| 21 | Stores Expense (Electric) | | 5,638 | 3,289 |
| 22 | Stores Expense (Co 3 Bulk) | | - | - |

| | A | AF | AG | AH |
|---|---|---|---|---|
| 1 | **Public Service Company of New Mexico** | | | |
| 2 | **Schedule E-4** | | | |
| 3 | **Amounts of Working Capital Charged to O&M** | | | |
| 4 | **Base Period Ending 6/30/2026** | | | |
| 5 | **Test Period Ending 9/30/2028** | | | |
| 6 | **This schedule is sponsored by** | | | |
| 7 | **PNM Witness Gutierrez** | | | |
| 8 | | | | |
| 9 | **A/C Number and Description** | **Linkage Reference** | **Test Period Oct-27** | **Test Period Nov-27** |
| 23 | | | | |
| 24 | Account 165 - Prepayments | | | |
| 25 | 2-165000-650 Prepaid ROW | PNM Exhibit RNG-4 WP WC-3 | 281,413 | 281,413 |
| 26 | 2-165000-650 Prepaid Equipment Lease | | 30,908 | 30,908 |
| 27 | 2-165000-650 Prepaid Software | | 3,892 | 3,892 |
| 28 | 3-165000-046 Prepaid Air permit | | 6,334 | 6,334 |
| 29 | 3-165000-713 Prepaid Air Permit | | 37,899 | 37,899 |
| 30 | 1-165000-100 Prepaid Joint Pole use | | 18,221 | 18,221 |
| 31 | 3-165000-715 Prepaid FC Lease | | 17,871 | 17,871 |
| 32 | 3-165000-724 Prepaid PV Software | | 17,410 | 16,166 |
| 33 | 3-165000-720 Prepaid PV Invoices | | 65,399 | 65,399 |
| 34 | 1-165025-010 Prepaid Ins-electric | | 1,181,975 | 1,181,975 |
| 35 | 6-165025-174 Prepaid Ins-Gen Mgmt | | 56,052 | 56,052 |
| 36 | 2-165025-650 Prepaid Ins-transmission | | 110,913 | 110,913 |
| 37 | 2-165025-676 Prepaid Ins SJ Switchyard | | 58 | 58 |
| 38 | 3-165025-046 Prepaid Ins Rio Bravo | | 25,309 | 25,309 |

| | A | AF | AG | AH |
|---|---|---|---|---|
| 1 | **Public Service Company of New Mexico** | | | |
| 2 | **Schedule E-4** | | | |
| 3 | **Amounts of Working Capital Charged to O&M** | | | |
| 4 | **Base Period Ending 6/30/2026** | | | |
| 5 | **Test Period Ending 9/30/2028** | | | |
| 6 | **This schedule is sponsored by** | | | |
| 7 | **PNM Witness Gutierrez** | | | |
| 8 | | | | |
| 9 | **A/C Number and Description** | **Linkage Reference** | **Test Period Oct-27** | **Test Period Nov-27** |
| 39 | 3-165025-357 Prepaid Ins Aztec | | 679 | 679 |
| 40 | 3-165025-700 Prepaid Ins Bulk | | 20,373 | 20,373 |
| 41 | 3-165025-702 Prepaid Ins Afton | | 45,860 | 46,150 |
| 42 | 3-165025-703 Prepaid Ins Lordsburg | | 11,178 | 11,178 |
| 43 | 3-165025-713 Prepaid Ins Reeves | | 22,718 | 22,718 |
| 44 | 3-165025-716 Prepaid Ins Algodones | | 809 | 809 |
| 45 | 3-165025-744 Prepaid Ins Luna | | 26,848 | 26,848 |
| 46 | 3-165025-751 Prepaid Ins Solar energy | | 12,095 | 10,714 |
| 47 | 3-165025-752 Prepaid Ins La Luz | | 5,560 | 5,560 |
| 48 | 3-165025-755 Prepaid Ins Solar renewable | | 29,338 | 29,338 |
| 49 | 3-165025-737 Prepaid Ins Batteries | | 1,870 | 1,870 |
| 50 | 3-165025-715 Prepaid Ins FC | | 63,787 | 63,787 |
| 51 | 3-165025-789 Prepaid Ins San Juan | | - | - |
| 52 | 3-165025-720 PV Prepaid Insurance | | 88,715 | 88,715 |
| 53 | 3-165100-720 Prepaid Water Rights-PV | | 4,589 | 4,589 |
| 54 | Grand Total | | 4,058,295 | 2,554,822 |

| | A | AI | AJ | AK | AL | AM |
|---|---|---|---|---|---|---|
| 1 | **Public Service Company of New Mexico** | | | | | |
| 2 | **Schedule E-4** | | | | | |
| 3 | **Amounts of Working Capital Charged to O&M** | | | | | |
| 4 | **Base Period Ending 6/30/2026** | | | | | |
| 5 | **Test Period Ending 9/30/2028** | | | | | |
| 6 | **This schedule is sponsored by** | | | | | |
| 7 | **PNM Witness Gutierrez** | | | | | |
| 8 | | | | | | |
| 9 | **A/C Number and Description** | **Test Period Dec-27** | **Test Period Jan-28** | **Test Period Feb-28** | **Test Period Mar-28** | **Test Period Apr-28** |
| 10 | Account 151 - Fuel Stock | | | | | |
| 11 | Rio Bravo Oil (547400) | - | - | - | - | - |
| 12 | | | | | | |
| 13 | Account 154 - Materials and Supplies | | | | | |
| 14 | Electric Inventory | 13,004 | 17,330 | 36,674 | 13,618 | 39,843 |
| 15 | Minor Material Inventory (Electric) | 938 | 1,911 | 6,015 | 1,418 | 2,825 |
| 16 | Stores Issues/Returns (Co 3 Bulk) | - | - | - | - | - |
| 17 | Four Corners M&S (154000-715) | 118,131 | 118,131 | 118,131 | 118,131 | 118,131 |
| 18 | Palo Verde M&S (154000-720) | 94,313 | 395,798 | 664,429 | 818,956 | 1,378,958 |
| 19 | | | | | | |
| 20 | Account 163 - Stores Expense | | | | | |
| 21 | Stores Expense (Electric) | 938 | 2,450 | 8,919 | 2,597 | 3,424 |
| 22 | Stores Expense (Co 3 Bulk) | - | - | - | - | - |

| | A | AI | AJ | AK | AL | AM |
|---|---|---|---|---|---|---|
| 1 | **Public Service Company of New Mexico** | | | | | |
| 2 | **Schedule E-4** | | | | | |
| 3 | **Amounts of Working Capital Charged to O&M** | | | | | |
| 4 | **Base Period Ending 6/30/2026** | | | | | |
| 5 | **Test Period Ending 9/30/2028** | | | | | |
| 6 | **This schedule is sponsored by** | | | | | |
| 7 | **PNM Witness Gutierrez** | | | | | |
| 8 | | | | | | |
| 9 | **A/C Number and Description** | **Test Period Dec-27** | **Test Period Jan-28** | **Test Period Feb-28** | **Test Period Mar-28** | **Test Period Apr-28** |
| 23 | | | | | | |
| 24 | Account 165 - Prepayments | | | | | |
| 25 | 2-165000-650 Prepaid ROW | 281,413 | 281,413 | 281,413 | 281,413 | 304,855 |
| 26 | 2-165000-650 Prepaid Equipment Lease | 30,908 | - | 61,816 | 30,908 | - |
| 27 | 2-165000-650 Prepaid Software | 3,892 | 3,892 | 3,892 | 3,892 | 3,892 |
| 28 | 3-165000-046 Prepaid Air permit | 6,334 | 6,334 | 6,334 | 6,334 | 6,334 |
| 29 | 3-165000-713 Prepaid Air Permit | 37,899 | 37,899 | 37,899 | 37,899 | 37,899 |
| 30 | 1-165000-100 Prepaid Joint Pole use | 18,221 | 17,595 | 17,595 | 17,595 | 17,595 |
| 31 | 3-165000-715 Prepaid FC Lease | 17,871 | 17,871 | 17,871 | 17,871 | 17,871 |
| 32 | 3-165000-724 Prepaid PV Software | 19,292 | 15,644 | 15,817 | 15,817 | 16,068 |
| 33 | 3-165000-720 Prepaid PV Invoices | 252,003 | 59,579 | 57,450 | 181,036 | 50,852 |
| 34 | 1-165025-010 Prepaid Ins-electric | 1,181,975 | 1,181,155 | 1,180,485 | 1,031,709 | 1,261,340 |
| 35 | 6-165025-174 Prepaid Ins-Gen Mgmt | 56,052 | 56,004 | 55,982 | 49,869 | 59,306 |
| 36 | 2-165025-650 Prepaid Ins-transmission | 110,913 | 110,971 | 110,959 | 108,299 | 112,405 |
| 37 | 2-165025-676 Prepaid Ins SJ Switchyard | 58 | 58 | 58 | 58 | 58 |
| 38 | 3-165025-046 Prepaid Ins Rio Bravo | 25,344 | 25,309 | 25,309 | 24,349 | 25,309 |

| | A | AI | AJ | AK | AL | AM |
|---|---|---|---|---|---|---|
| 1 | **Public Service Company of New Mexico** | | | | | |
| 2 | **Schedule E-4** | | | | | |
| 3 | **Amounts of Working Capital Charged to O&M** | | | | | |
| 4 | **Base Period Ending 6/30/2026** | | | | | |
| 5 | **Test Period Ending 9/30/2028** | | | | | |
| 6 | **This schedule is sponsored by** | | | | | |
| 7 | **PNM Witness Gutierrez** | | | | | |
| 8 | | | | | | |
| 9 | **A/C Number and Description** | **Test Period Dec-27** | **Test Period Jan-28** | **Test Period Feb-28** | **Test Period Mar-28** | **Test Period Apr-28** |
| 39 | 3-165025-357 Prepaid Ins Aztec | 679 | 679 | 679 | 679 | 679 |
| 40 | 3-165025-700 Prepaid Ins Bulk | 20,373 | 19,618 | 19,565 | 12,748 | 26,381 |
| 41 | 3-165025-702 Prepaid Ins Afton | 46,150 | 46,150 | 46,150 | 44,904 | 46,150 |
| 42 | 3-165025-703 Prepaid Ins Lordsburg | 11,178 | 11,178 | 11,178 | 10,880 | 11,178 |
| 43 | 3-165025-713 Prepaid Ins Reeves | 22,718 | 22,718 | 22,718 | 22,300 | 22,718 |
| 44 | 3-165025-716 Prepaid Ins Algodones | 809 | 809 | 809 | 809 | 809 |
| 45 | 3-165025-744 Prepaid Ins Luna | 26,848 | 26,848 | 26,848 | 26,215 | 26,848 |
| 46 | 3-165025-751 Prepaid Ins Solar energy | 10,714 | 10,714 | 10,714 | 10,477 | 10,714 |
| 47 | 3-165025-752 Prepaid Ins La Luz | 5,560 | 5,560 | 5,560 | 5,543 | 5,560 |
| 48 | 3-165025-755 Prepaid Ins Solar renewable | 29,338 | 29,338 | 29,338 | 28,693 | 29,338 |
| 49 | 3-165025-737 Prepaid Ins Batteries | 1,870 | 1,870 | 1,870 | 1,870 | 1,870 |
| 50 | 3-165025-715 Prepaid Ins FC | 63,787 | 23,184 | 23,184 | 23,184 | 23,184 |
| 51 | 3-165025-789 Prepaid Ins San Juan | - | - | - | - | - |
| 52 | 3-165025-720 PV Prepaid Insurance | 88,715 | 62,194 | 62,194 | 62,194 | 62,459 |
| 53 | 3-165100-720 Prepaid Water Rights-PV | 4,589 | 4,589 | 4,589 | 4,589 | 4,589 |
| 54 | Grand Total | 2,602,827 | 2,614,791 | 2,972,442 | 3,016,852 | 3,729,441 |

| | A | AN | AO | AP | AQ | AR |
|---|---|---|---|---|---|---|
| 1 | **Public Service Company of New Mexico** | | | | | |
| 2 | **Schedule E-4** | | | | | |
| 3 | **Amounts of Working Capital Charged to O&M** | | | | | |
| 4 | **Base Period Ending 6/30/2026** | | | | | |
| 5 | **Test Period Ending 9/30/2028** | | | | | |
| 6 | **This schedule is sponsored by** | | | | | |
| 7 | **PNM Witness Gutierrez** | | | | | |
| 8 | | | | | | |
| 9 | **A/C Number and Description** | **Test Period May-28** | **Test Period Jun-28** | **Test Period Jul-28** | **Test Period Aug-28** | **Test Period Sep-28** |
| 10 | Account 151 - Fuel Stock | | | | | |
| 11 | Rio Bravo Oil (547400) | - | - | - | - | - |
| 12 | | | | | | |
| 13 | Account 154 - Materials and Supplies | | | | | |
| 14 | Electric Inventory | 22,683 | 34,918 | 42,451 | 31,936 | 31,755 |
| 15 | Minor Material Inventory (Electric) | 2,957 | 4,838 | 3,096 | 2,627 | 2,695 |
| 16 | Stores Issues/Returns (Co 3 Bulk) | - | - | - | - | - |
| 17 | Four Corners M&S (154000-715) | 118,131 | 118,131 | 118,131 | 118,131 | 118,131 |
| 18 | Palo Verde M&S (154000-720) | 288,777 | 360,823 | 1,436,656 | 554,043 | 1,074,117 |
| 19 | | | | | | |
| 20 | Account 163 - Stores Expense | | | | | |
| 21 | Stores Expense (Electric) | 3,600 | 5,844 | 3,666 | 3,177 | 3,147 |
| 22 | Stores Expense (Co 3 Bulk) | - | - | - | - | - |

| | A | AN | AO | AP | AQ | AR |
|---|---|---|---|---|---|---|
| 1 | **Public Service Company of New Mexico** | | | | | |
| 2 | **Schedule E-4** | | | | | |
| 3 | **Amounts of Working Capital Charged to O&M** | | | | | |
| 4 | **Base Period Ending 6/30/2026** | | | | | |
| 5 | **Test Period Ending 9/30/2028** | | | | | |
| 6 | **This schedule is sponsored by** | | | | | |
| 7 | **PNM Witness Gutierrez** | | | | | |
| 8 | | | | | | |
| 9 | **A/C Number and Description** | **Test Period May-28** | **Test Period Jun-28** | **Test Period Jul-28** | **Test Period Aug-28** | **Test Period Sep-28** |
| 23 | | | | | | |
| 24 | Account 165 - Prepayments | | | | | |
| 25 | 2-165000-650 Prepaid ROW | 304,855 | 304,855 | 304,855 | 304,855 | 304,855 |
| 26 | 2-165000-650 Prepaid Equipment Lease | - | 35,906 | 30,908 | 30,908 | 30,908 |
| 27 | 2-165000-650 Prepaid Software | 3,892 | 3,892 | 3,892 | 3,892 | 3,892 |
| 28 | 3-165000-046 Prepaid Air permit | 6,334 | 6,334 | 6,115 | 6,334 | 6,334 |
| 29 | 3-165000-713 Prepaid Air Permit | 37,899 | 37,894 | 36,590 | 37,899 | 37,899 |
| 30 | 1-165000-100 Prepaid Joint Pole use | 17,595 | 17,595 | 18,221 | 18,221 | 18,221 |
| 31 | 3-165000-715 Prepaid FC Lease | 17,871 | 17,871 | 17,467 | 17,871 | 17,871 |
| 32 | 3-165000-724 Prepaid PV Software | 16,082 | 15,663 | 21,372 | 18,123 | 14,630 |
| 33 | 3-165000-720 Prepaid PV Invoices | 50,852 | 50,852 | 69,671 | 69,898 | 70,894 |
| 34 | 1-165025-010 Prepaid Ins-electric | 1,180,539 | 405,938 | 1,186,456 | 1,108,047 | 1,181,878 |
| 35 | 6-165025-174 Prepaid Ins-Gen Mgmt | 55,984 | 23,175 | 56,690 | 52,199 | 56,129 |
| 36 | 2-165025-650 Prepaid Ins-transmission | 110,960 | 105,551 | 111,381 | 110,024 | 111,083 |
| 37 | 2-165025-676 Prepaid Ins SJ Switchyard | 58 | 58 | 59 | 59 | 59 |
| 38 | 3-165025-046 Prepaid Ins Rio Bravo | 25,309 | 19,363 | 25,474 | 25,483 | 25,474 |

| | A | AN | AO | AP | AQ | AR |
|---|---|---|---|---|---|---|
| 1 | **Public Service Company of New Mexico** | | | | | |
| 2 | **Schedule E-4** | | | | | |
| 3 | **Amounts of Working Capital Charged to O&M** | | | | | |
| 4 | **Base Period Ending 6/30/2026** | | | | | |
| 5 | **Test Period Ending 9/30/2028** | | | | | |
| 6 | **This schedule is sponsored by** | | | | | |
| 7 | **PNM Witness Gutierrez** | | | | | |
| 8 | | | | | | |
| 9 | **A/C Number and Description** | **Test Period May-28** | **Test Period Jun-28** | **Test Period Jul-28** | **Test Period Aug-28** | **Test Period Sep-28** |
| 39 | 3-165025-357 Prepaid Ins Aztec | 679 | 690 | 699 | 699 | 699 |
| 40 | 3-165025-700 Prepaid Ins Bulk | 19,568 | 6,629 | 21,580 | 14,259 | 20,373 |
| 41 | 3-165025-702 Prepaid Ins Afton | 46,150 | 40,333 | 46,579 | 46,601 | 46,579 |
| 42 | 3-165025-703 Prepaid Ins Lordsburg | 11,177 | 8,390 | 11,274 | 11,276 | 11,274 |
| 43 | 3-165025-713 Prepaid Ins Reeves | 22,718 | 20,875 | 22,977 | 22,984 | 22,977 |
| 44 | 3-165025-716 Prepaid Ins Algodones | 809 | 635 | 827 | 827 | 827 |
| 45 | 3-165025-744 Prepaid Ins Luna | 26,848 | 20,992 | 27,119 | 27,124 | 27,119 |
| 46 | 3-165025-751 Prepaid Ins Solar energy | 10,714 | 10,108 | 10,996 | 10,997 | 10,996 |
| 47 | 3-165025-752 Prepaid Ins La Luz | 5,560 | 5,279 | 5,633 | 5,634 | 5,633 |
| 48 | 3-165025-755 Prepaid Ins Solar renewable | 29,338 | 28,793 | 30,183 | 30,187 | 30,183 |
| 49 | 3-165025-737 Prepaid Ins Batteries | 1,870 | 1,900 | 1,962 | 1,962 | 1,962 |
| 50 | 3-165025-715 Prepaid Ins FC | 23,184 | 23,184 | 63,787 | 61,420 | 72,606 |
| 51 | 3-165025-789 Prepaid Ins San Juan | - | - | - | - | - |
| 52 | 3-165025-720 PV Prepaid Insurance | 62,459 | 62,459 | 88,715 | 88,715 | 87,818 |
| 53 | 3-165100-720 Prepaid Water Rights-PV | 4,589 | 4,589 | 4,589 | 4,589 | 4,589 |
| 54 | Grand Total | 2,530,041 | 1,804,356 | 3,830,069 | 2,841,001 | 3,453,606 |

| | A | AS | AT | AU |
|---|---|---|---|---|
| 1 | **Public Service Company of New Mexico** | | | |
| 2 | **Schedule E-4** | | | |
| 3 | **Amounts of Working Capital Charged to O&M** | | | |
| 4 | **Base Period Ending 6/30/2026** | | | |
| 5 | **Test Period Ending 9/30/2028** | | | |
| 6 | **This schedule is sponsored by** | | | |
| 7 | **PNM Witness Gutierrez** | | | |
| 8 | | | | |
| 9 | **A/C Number and Description** | **Total Test Period** | **Test Period Adjustments** | **Adjusted Test Period Total** |
| 10 | Account 151 - Fuel Stock | | | |
| 11 | Rio Bravo Oil (547400) | - | | - |
| 12 | | | | |
| 13 | Account 154 - Materials and Supplies | | | |
| 14 | Electric Inventory | 364,882 | | 364,882 |
| 15 | Minor Material Inventory (Electric) | 36,911 | | 36,911 |
| 16 | Stores Issues/Returns (Co 3 Bulk) | - | | - |
| 17 | Four Corners M&S (154000-715) | 1,417,570 | | 1,417,570 |
| 18 | Palo Verde M&S (154000-720) | 8,972,720 | | 8,972,720 |
| 19 | | | | |
| 20 | Account 163 - Stores Expense | | | |
| 21 | Stores Expense (Electric) | 46,690 | | 46,690 |
| 22 | Stores Expense (Co 3 Bulk) | - | | - |

| | A | AS | AT | AU |
|---|---|---|---|---|
| 1 | **Public Service Company of New Mexico** | | | |
| 2 | **Schedule E-4** | | | |
| 3 | **Amounts of Working Capital Charged to O&M** | | | |
| 4 | **Base Period Ending 6/30/2026** | | | |
| 5 | **Test Period Ending 9/30/2028** | | | |
| 6 | **This schedule is sponsored by** | | | |
| 7 | **PNM Witness Gutierrez** | | | |
| 8 | | | | |
| 9 | **A/C Number and Description** | **Total Test Period** | **Test Period Adjustments** | **Adjusted Test Period Total** |
| 23 | | | | |
| 24 | Account 165 - Prepayments | | | |
| 25 | 2-165000-650 Prepaid ROW | 3,517,610 | | 3,517,610 |
| 26 | 2-165000-650 Prepaid Equipment Lease | 314,077 | | 314,077 |
| 27 | 2-165000-650 Prepaid Software | 46,700 | | 46,700 |
| 28 | 3-165000-046 Prepaid Air permit | 75,789 | | 75,789 |
| 29 | 3-165000-713 Prepaid Air Permit | 453,474 | | 453,474 |
| 30 | 1-165000-100 Prepaid Joint Pole use | 214,896 | | 214,896 |
| 31 | 3-165000-715 Prepaid FC Lease | 214,043 | | 214,043 |
| 32 | 3-165000-724 Prepaid PV Software | 202,085 | | 202,085 |
| 33 | 3-165000-720 Prepaid PV Invoices | 1,043,886 | | 1,043,886 |
| 34 | 1-165025-010 Prepaid Ins-electric | 13,263,473 | | 13,263,473 |
| 35 | 6-165025-174 Prepaid Ins-Gen Mgmt | 633,497 | | 633,497 |
| 36 | 2-165025-650 Prepaid Ins-transmission | 1,324,372 | | 1,324,372 |
| 37 | 2-165025-676 Prepaid Ins SJ Switchyard | 696 | | 696 |
| 38 | 3-165025-046 Prepaid Ins Rio Bravo | 297,342 | | 297,342 |

| | A | AS | AT | AU |
|---|---|---|---|---|
| 1 | **Public Service Company of New Mexico** | | | |
| 2 | **Schedule E-4** | | | |
| 3 | **Amounts of Working Capital Charged to O&M** | | | |
| 4 | **Base Period Ending 6/30/2026** | | | |
| 5 | **Test Period Ending 9/30/2028** | | | |
| 6 | **This schedule is sponsored by** | | | |
| 7 | **PNM Witness Gutierrez** | | | |
| 8 | | | | |
| 9 | **A/C Number and Description** | **Total Test Period** | **Test Period Adjustments** | **Adjusted Test Period Total** |
| 39 | 3-165025-357 Prepaid Ins Aztec | 8,223 | | 8,223 |
| 40 | 3-165025-700 Prepaid Ins Bulk | 221,841 | | 221,841 |
| 41 | 3-165025-702 Prepaid Ins Afton | 547,753 | | 547,753 |
| 42 | 3-165025-703 Prepaid Ins Lordsburg | 131,336 | | 131,336 |
| 43 | 3-165025-713 Prepaid Ins Reeves | 271,141 | | 271,141 |
| 44 | 3-165025-716 Prepaid Ins Algodones | 9,586 | | 9,586 |
| 45 | 3-165025-744 Prepaid Ins Luna | 316,505 | | 316,505 |
| 46 | 3-165025-751 Prepaid Ins Solar energy | 129,953 | | 129,953 |
| 47 | 3-165025-752 Prepaid Ins La Luz | 66,641 | | 66,641 |
| 48 | 3-165025-755 Prepaid Ins Solar renewable | 353,407 | | 353,407 |
| 49 | 3-165025-737 Prepaid Ins Batteries | 22,747 | | 22,747 |
| 50 | 3-165025-715 Prepaid Ins FC | 528,278 | | 528,278 |
| 51 | 3-165025-789 Prepaid Ins San Juan | - | | - |
| 52 | 3-165025-720 PV Prepaid Insurance | 905,354 | | 905,354 |
| 53 | 3-165100-720 Prepaid Water Rights-PV | 55,068 | | 55,068 |
| 54 | Grand Total | 36,008,544 | - | 36,008,544 |

| | A | AV | AW |
|---|---|---|---|
| 1 | **Public Service Company of New Mexico** | | |
| 2 | **Schedule E-4** | | |
| 3 | **Amounts of Working Capital Charged to O&M** | | |
| 4 | **Base Period Ending 6/30/2026** | | |
| 5 | **Test Period Ending 9/30/2028** | | |
| 6 | **This schedule is sponsored by** | | |
| 7 | **PNM Witness Gutierrez** | | |
| 8 | | | |
| 9 | **A/C Number and Description** | **Adjusted Test Period vs Adjusted Base Period Variance** | **Test Period Reference** |
| 10 | Account 151 - Fuel Stock | | |
| 11 | Rio Bravo Oil (547400) | (90,840) | |
| 12 | | | |
| 13 | Account 154 - Materials and Supplies | | |
| 14 | Electric Inventory | - | |
| 15 | Minor Material Inventory (Electric) | - | |
| 16 | Stores Issues/Returns (Co 3 Bulk) | - | |
| 17 | Four Corners M&S (154000-715) | - | |
| 18 | Palo Verde M&S (154000-720) | - | |
| 19 | | | |
| 20 | Account 163 - Stores Expense | | |
| 21 | Stores Expense (Electric) | - | |
| 22 | Stores Expense (Co 3 Bulk) | - | |

| | A | AV | AW |
|---|---|---|---|
| 1 | **Public Service Company of New Mexico** | | |
| 2 | **Schedule E-4** | | |
| 3 | **Amounts of Working Capital Charged to O&M** | | |
| 4 | **Base Period Ending 6/30/2026** | | |
| 5 | **Test Period Ending 9/30/2028** | | |
| 6 | **This schedule is sponsored by** | | |
| 7 | **PNM Witness Gutierrez** | | |
| 8 | | | |
| 9 | **A/C Number and Description** | **Adjusted Test Period vs Adjusted Base Period Variance** | **Test Period Reference** |
| 23 | | | |
| 24 | Account 165 - Prepayments | | |
| 25 | 2-165000-650 Prepaid ROW | 1,509,206 | PNM Exhibit RNG-4 WP WC-3, WP OM-14, OM-16 |
| 26 | 2-165000-650 Prepaid Equipment Lease | - | |
| 27 | 2-165000-650 Prepaid Software | - | |
| 28 | 3-165000-046 Prepaid Air permit | - | |
| 29 | 3-165000-713 Prepaid Air Permit | - | |
| 30 | 1-165000-100 Prepaid Joint Pole use | - | |
| 31 | 3-165000-715 Prepaid FC Lease | - | |
| 32 | 3-165000-724 Prepaid PV Software | - | |
| 33 | 3-165000-720 Prepaid PV Invoices | - | |
| 34 | 1-165025-010 Prepaid Ins-electric | - | |
| 35 | 6-165025-174 Prepaid Ins-Gen Mgmt | - | |
| 36 | 2-165025-650 Prepaid Ins-transmission | - | |
| 37 | 2-165025-676 Prepaid Ins SJ Switchyard | - | |
| 38 | 3-165025-046 Prepaid Ins Rio Bravo | - | |

| | A | AV | AW |
|---|---|---|---|
| 1 | **Public Service Company of New Mexico** | | |
| 2 | **Schedule E-4** | | |
| 3 | **Amounts of Working Capital Charged to O&M** | | |
| 4 | **Base Period Ending 6/30/2026** | | |
| 5 | **Test Period Ending 9/30/2028** | | |
| 6 | **This schedule is sponsored by** | | |
| 7 | **PNM Witness Gutierrez** | | |
| 8 | | | |
| 9 | **A/C Number and Description** | **Adjusted Test Period vs Adjusted Base Period Variance** | **Test Period Reference** |
| 39 | 3-165025-357 Prepaid Ins Aztec | - | |
| 40 | 3-165025-700 Prepaid Ins Bulk | - | |
| 41 | 3-165025-702 Prepaid Ins Afton | - | |
| 42 | 3-165025-703 Prepaid Ins Lordsburg | - | |
| 43 | 3-165025-713 Prepaid Ins Reeves | - | |
| 44 | 3-165025-716 Prepaid Ins Algodones | - | |
| 45 | 3-165025-744 Prepaid Ins Luna | - | |
| 46 | 3-165025-751 Prepaid Ins Solar energy | - | |
| 47 | 3-165025-752 Prepaid Ins La Luz | - | |
| 48 | 3-165025-755 Prepaid Ins Solar renewable | - | |
| 49 | 3-165025-737 Prepaid Ins Batteries | - | |
| 50 | 3-165025-715 Prepaid Ins FC | - | |
| 51 | 3-165025-789 Prepaid Ins San Juan | - | |
| 52 | 3-165025-720 PV Prepaid Insurance | - | |
| 53 | 3-165100-720 Prepaid Water Rights-PV | - | |
| 54 | Grand Total | 1,418,366 | |

| | A |
|---|---|
| 1 | **Public Service Company of New Mexico** |
| 2 | **Schedule E-4** |
| 3 | **Amounts of Working Capital Charged to O&M (Notes)** |
| 4 | **Base Period Ending 6/30/2026** |
| 5 | **Test Period Ending 9/30/2028** |
| 6 | **This schedule is sponsored by PNM Witness Gutierrez** |
| 7 | |
| 8 | Base period data is historical information from the Company's Book Balance Amounts. |
| 9 | PNM does not forecast changes to Materials and Supplies or Prepayments, Except for ROW balances and Fuel Stock. |
| 10 | PNM has removed all San Juan related fuel stock and prepaids through a Base Period adjustment |

Other property and investments

# PNM F Series Schedules

Schedule F-1: Other property and investments

# PNM Schedule F-1

Other property and investments

| | A | B | C | D | E |
|---|---|---|---|---|---|
| 1 | **Public Service Company of New Mexico** | | | | |
| 2 | **Schedule F-1** | | | | |
| 3 | **Other Property and Investments** | | | | |
| 4 | **Base Period Ending 6/30/2026** | | | | |
| 5 | **Test Period Ending 9/30/2028** | | | | |
| 6 | **This schedule is sponsored by PNM Witness Gutierrez** | | | | |
| 7 | | | | | |
| 8 | **Description** | **FERC** | **Base Period Beginning Balance Jul-25** | **Base Period Activity** | **Base Period Ending Balance Jun-26** |
| 9 | | | | | |
| 10 | Non-Utility Property | | | | |
| 11 | Sub-Station Sites-- Land | 121 | 17,259 | - | 17,259 |
| 12 | Ribble Water Rights | 121 | 81,273 | - | 81,273 |
| 13 | Total Non-Utility Property | 121 | 98,532 | - | 98,532 |
| 14 | | | | | |
| 15 | Non-Utility Depreciation Reserve | 122 | 2,653 | - | 2,653 |
| 16 | | | | | |
| 17 | Notes: | | | | |
| 18 | Base period data is historical information from the | | | | |
| 19 | Company's Book Balance Amounts. | | | | |
| 20 | PNM does not request these amounts in its cost of service | | | | |
| 21 | studies. This is being provided for informational purposes. | | | | |

| | A | B | F | G | H | I |
|---|---|---|---|---|---|---|
| 1 | **Public Service Company of New Mexico** | | | | | |
| 2 | **Schedule F-1** | | | | | |
| 3 | **Other Property and Investments** | | | | | |
| 4 | **Base Period Ending 6/30/2026** | | | | | |
| 5 | **Test Period Ending 9/30/2028** | | | | | |
| 6 | **This schedule is sponsored by PNM Witness Gutierrez** | | | | | |
| 7 | | | | | | |
| 8 | **Description** | **FERC** | **Linkage Activity Jul-26 - Jun-27** | **Linkage Activity Oct-26 - Sep-27** | **Test Period Activity Oct-27 - Sep-28** | **Test Period Ending Balance Sep-28** |
| 9 | | | | | | |
| 10 | Non-Utility Property | | | | | |
| 11 | Sub-Station Sites-- Land | 121 | - | - | - | 17,259 |
| 12 | Ribble Water Rights | 121 | - | - | - | 81,273 |
| 13 | Total Non-Utility Property | 121 | - | - | - | 98,532 |
| 14 | | | | | | |
| 15 | Non-Utility Depreciation Reserve | 122 | - | - | - | 2,653 |
| 16 | | | | | | |
| 17 | Notes: | | | | | |
| 18 | Base period data is historical information from the | | | | | |
| 19 | Company's Book Balance Amounts. | | | | | |
| 20 | PNM does not request these amounts in its cost of service | | | | | |
| 21 | studies. This is being provided for informational purposes. | | | | | |

Capitalization, the cost of capital, and the overall rate of return

# PNM G Series Schedules

Schedule G-1: Capitalization, the cost of capital, and the overall rate of return in conformance with an original cost Rate Base

Schedule G-2: Capitalization, the cost of capital, and the overall rate of return in conformance with a cost of reproduction as a going concern and other elements of value Rate Base

Schedule G-3: Embedded cost of borrowed capital with term of maturity in excess of one year from the date of issue

Schedule G-4: Cost of short-term borrowed capital including revolving credit agreements and other notes payable

Schedule G-5: Embedded cost of preferred stock capital

Schedule G-6: Ratio of earnings to fixed charges

Schedule G-7: Issuance restrictions on borrowed and preferred stock capital

Schedule G-8: Common stock equity capital

Schedule G-9: Historical activity in common stock, paid-in capital, and retained earnings

Schedule G-10: Summary of applicant's support for the claimed rate of return on common stock equity capital

# PNM Schedule G-1

Capitalization, the cost of capital, and the overall rate of return in conformance with an original cost Rate Base

| | A | B | C | D | E | F |
|---|---|---|---|---|---|---|
| 1 | **Public Service Company of New Mexico** | | | | | |
| 2 | **Schedule G-1** | | | | | |
| 3 | **Capitalization, the Cost of Capital and the Overall Rate of Return (After-Tax)** | | | | | |
| 4 | **Base Period Ending 6/30/2026** | | | | | |
| 5 | **This schedule is sponsored by PNM Witness Agrawal** | | | | | |
| 6 | | | | | | |
| 7 | **Capital Component** | **Total Capitalization Base Period** (in thousands) | **Percentage of Total Capitalization** | **Capital Component Cost** | **Weighted Average Cost** | **Reference** |
| 8 | | | | | | |
| 9 | Long Term Debt | 2,225,345 | 46.65% | 4.29% | 2.00% | Schedule G-3 |
| 10 | | | | | | |
| 11 | Preferred Stock | 11,529 | 0.24% | 4.62% | 0.01% | Schedule G-5 |
| 12 | | | | | | |
| 13 | Common Equity | 2,533,501 | 53.11% | 9.45% | 5.02% | ROE per 24-00089-UT Final Order |
| 14 | | | | | | |
| 15 | Total | 4,770,375 | 100.00% | | 7.03% | |
| 16 | | | | | | |
| 17 | Notes: | | | | | |
| 18 | Please refer to Direct Testimony of PNM Witness Agrawal for discussion of adjustments/changes. | | | | | |
| 19 | Amounts may not foot due to rounding. | | | | | |
| 20 | Base period data is historical information from the Company's Book Balance Amounts. | | | | | |

| | A | B | C | D | E | F | G |
|---|---|---|---|---|---|---|---|
| 1 | **Public Service Company of New Mexico** | | | | | | |
| 2 | **Schedule G-1** | | | | | | |
| 3 | **Capitalization, the Cost of Capital and the Overall Rate of Return (After-Tax)** | | | | | | |
| 4 | **Linkage Ending 9/30/2027** | | | | | | |
| 5 | **This schedule is sponsored by PNM Witness Agrawal** | | | | | | |
| 6 | | | | | | | |
| 7 | **Capital Component** | **Total Capitalization Base Period** (in thousands) | **Total Capitalization Linkage** (in thousands) | **Percentage of Total Capitalization** | **Capital Component Cost** | **Weighted Average Cost** | **Reference** |
| 8 | | | | | | | |
| 9 | Long Term Debt | 2,225,345 | 2,825,345 | 47.80% | 4.84% | 2.31% | Schedule G-3 |
| 10 | | | | | | | |
| 11 | Preferred Stock | 11,529 | 11,529 | 0.20% | 4.62% | 0.01% | Schedule G-5 |
| 12 | | | | | | | |
| 13 | Common Equity | 2,533,501 | 3,073,280 | 52.00% | 9.45% | 4.91% | |
| 14 | | | | | | | |
| 15 | Total | 4,770,375 | 5,910,154 | 100.00% | | 7.24% | |
| 16 | | | | | | | |
| 17 | Notes: | | | | | | |
| 18 | Please refer to Direct Testimony of PNM Witness Agrawal for discussion of adjustments/changes. | | | | | | |
| 19 | Amounts may not foot due to rounding. | | | | | | |

| | A | B | C | D | E | F | G |
|---|---|---|---|---|---|---|---|
| 1 | **Public Service Company of New Mexico** | | | | | | |
| 2 | **Schedule G-1** | | | | | | |
| 3 | **Capitalization, the Cost of Capital and the Overall Rate of Return (After-Tax)** | | | | | | |
| 4 | **Test Period Ending 9/30/2028** | | | | | | |
| 5 | **This schedule is sponsored by PNM Witness Agrawal** | | | | | | |
| 6 | | | | | | | |
| 7 | **Capital Component** | **Total Capitalization Linkage** (in thousands) | **Total Capitalization Test Period** (in thousands) | **Percentage of Total Capitalization** | **Capital Component Cost** | **Weighted Average Cost** | **Reference** |
| 8 | | | | | | | |
| 9 | Long Term Debt | 2,825,345 | 2,976,303 | 47.81% | 4.97% | 2.38% | Schedule G-3 |
| 10 | | | | | | | |
| 11 | Preferred Stock | 11,529 | 11,529 | 0.19% | 4.62% | 0.01% | Schedule G-5 |
| 12 | | | | | | | |
| 13 | Common Equity | 3,073,280 | 3,236,818 | 52.00% | 9.90% | 5.15% | |
| 14 | | | | | | | |
| 15 | Total | 5,910,154 | 6,224,650 | 100.00% | | 7.53% | |
| 16 | | | | | | | |
| 17 | Notes: | | | | | | |
| 18 | Please refer to Direct Testimony of PNM Witness Agrawal for discussion of adjustments/changes. | | | | | | |
| 19 | Amounts may not foot due to rounding. | | | | | | |

| | A | B | C | D | E | F | G |
|---|---|---|---|---|---|---|---|
| 1 | **Public Service Company of New Mexico** | | | | | | |
| 2 | **Schedule G-1** | | | | | | |
| 3 | **Capitalization, the Cost of Capital and the Overall Rate of Return (After-Tax)** | | | | | | |
| 4 | **Twelve Months Ending 12/31/2028** | | | | | | |
| 5 | **This schedule is sponsored by PNM Witness Agrawal** | | | | | | |
| 6 | | | | | | | |
| 7 | **Capital Component** | **Total Capitalization Test Period** (in thousands) | **Total Capitalization 12 Mo End 12/31/2028** (in thousands) | **Percentage of Total Capitalization** | **Capital Component Cost** | **Weighted Average Cost** | **Reference** |
| 8 | | | | | | | |
| 9 | Long Term Debt | 2,976,303 | 3,044,303 | 47.82% | 5.04% | 2.41% | Schedule G-3 |
| 10 | | | | | | | |
| 11 | Preferred Stock | 11,529 | 11,529 | 0.18% | 4.62% | 0.01% | Schedule G-5 |
| 12 | | | | | | | |
| 13 | Common Equity | 3,236,818 | 3,310,485 | 52.00% | 9.90% | 5.15% | |
| 14 | | | | | | | |
| 15 | Total | 6,224,650 | 6,366,317 | 100.00% | | 7.57% | |
| 16 | | | | | | | |
| 17 | Notes: | | | | | | |
| 18 | Please refer to Direct Testimony of PNM Witness Agrawal for discussion of adjustments/changes. | | | | | | |
| 19 | Amounts may not foot due to rounding. | | | | | | |

| | A | B | C | D | E | F | G |
|---|---|---|---|---|---|---|---|
| 1 | **Public Service Company of New Mexico** | | | | | | |
| 2 | **Schedule G-1** | | | | | | |
| 3 | **Capitalization, the Cost of Capital and the Overall Rate of Return (After-Tax)** | | | | | | |
| 4 | **Twelve Months Ending 12/31/2029** | | | | | | |
| 5 | **This schedule is sponsored by PNM Witness Agrawal** | | | | | | |
| 6 | | | | | | | |
| 7 | **Capital Component** | **Total Capitalization 12 Mo End 12/31/2028** (in thousands) | **Total Capitalization 12 Mo End 12/31/2029** (in thousands) | **Percentage of Total Capitalization** | **Capital Component Cost** | **Weighted Average Cost** | **Reference** |
| 8 | | | | | | | |
| 9 | Long Term Debt | 3,044,303 | 3,317,345 | 47.83% | 5.25% | 2.51% | Schedule G-3 |
| 10 | | | | | | | |
| 11 | Preferred Stock | 11,529 | 11,529 | 0.17% | 4.62% | 0.01% | Schedule G-5 |
| 12 | | | | | | | |
| 13 | Common Equity | 3,310,485 | 3,606,280 | 52.00% | 9.90% | 5.15% | |
| 14 | | | | | | | |
| 15 | Total | 6,366,317 | 6,935,154 | 100.00% | | 7.67% | |
| 16 | | | | | | | |
| 17 | Notes: | | | | | | |
| 18 | Please refer to Direct Testimony of PNM Witness Agrawal for discussion of adjustments/changes. | | | | | | |
| 19 | Amounts may not foot due to rounding. | | | | | | |

| | A | B | C | D | E | F | G |
|---|---|---|---|---|---|---|---|
| 1 | **Public Service Company of New Mexico** | | | | | | |
| 2 | **Schedule G-1** | | | | | | |
| 3 | **Capitalization, the Cost of Capital and the Overall Rate of Return (After-Tax)** | | | | | | |
| 4 | **Twelve Months Ending 12/31/2030** | | | | | | |
| 5 | **This schedule is sponsored by PNM Witness Agrawal** | | | | | | |
| 6 | | | | | | | |
| 7 | **Capital Component** | **Total Capitalization 12 Mo End 12/31/2029** (in thousands) | **Total Capitalization 12 Mo End 12/31/2030** (in thousands) | **Percentage of Total Capitalization** | **Capital Component Cost** | **Weighted Average Cost** | **Reference** |
| 8 | | | | | | | |
| 9 | Long Term Debt | 3,317,345 | 3,499,845 | 47.84% | 5.52% | 2.64% | Schedule G-3 |
| 10 | | | | | | | |
| 11 | Preferred Stock | 11,529 | 11,529 | 0.16% | 4.62% | 0.01% | Schedule G-5 |
| 12 | | | | | | | |
| 13 | Common Equity | 3,606,280 | 3,803,989 | 52.00% | 9.90% | 5.15% | |
| 14 | | | | | | | |
| 15 | Total | 6,935,154 | 7,315,363 | 100.00% | | 7.80% | |
| 16 | | | | | | | |
| 17 | Notes: | | | | | | |
| 18 | Please refer to Direct Testimony of PNM Witness Agrawal for discussion of adjustments/changes. | | | | | | |
| 19 | Amounts may not foot due to rounding. | | | | | | |

# PNM Schedule G-2

Capitalization, the cost of capital, and the overall rate of return in conformance with a cost of reproduction as a going concern and other elements of value Rate Base

| | A |
|---|---|
| 1 | **Public Service Company of New Mexico** |
| 2 | **Schedule G-2** |
| 3 | **Capitalization, the Cost of Capital and the Overall Rate of Return in Conformance** |
| 4 | **With a Cost of Reproduction as a Going Concern and Other Elements of Value** |
| 5 | **Base Period Ending 6/30/2026** |
| 6 | **Test Period Ending 9/30/2028** |
| 7 | **This schedule is sponsored by PNM Witness Agrawal** |
| 8 | |
| 9 | PNM has not filed any schedules based on cost of reproduction as a going concern. |
| 10 | Therefore, this schedule is not applicable and has not been filed in this proceeding. |

# PNM Schedule G-3

Embedded cost of borrowed capital with term of maturity in excess of one year from the date of issue

| | A | B | C | D | E | F | G |
|---|---|---|---|---|---|---|---|
| 1 | **Public Service Company of New Mexico** | | | | | | |
| 2 | **Schedule G-3** | | | | | | |
| 3 | **Embedded Cost of Borrowed Capital with Term** | | | | | | |
| 4 | **of Maturity in Excess of One Year from Date of Issue** | | | | | | |
| 5 | **Base Period Ending 6/30/2026** | | | | | | |
| 6 | **This schedule is sponsored by PNM Witness Agrawal** | | | | | | |
| 7 | | | | | | | |
| 8 | **Description** | **Issue Date** | **Maturity Date** | **Bond Term** | **Interest Rate** | **Principal Amount of Issue** | **Price at Offering/Gross Proceeds** |
| 9 | Farmington PCRB $146M | 10/1/21 | 4/1/33 | 12 | 2.150% | 146,000,000 | 146,000,000 |
| 10 | Maricopa PCRB $36M | 6/1/24 | 6/1/29 | 5 | 3.875% | 36,000,000 | 36,000,000 |
| 11 | Farmington PCRB $37M | 6/1/24 | 6/1/29 | 5 | 3.875% | 37,000,000 | 37,000,000 |
| 12 | Farmington PCRB $40.045M | 10/1/21 | 10/1/26 | 5 | 0.875% | 40,045,000 | 40,045,000 |
| 13 | Farmington PCRB $130M | 6/1/23 | 6/1/28 | 5 | 3.900% | 130,000,000 | 130,000,000 |
| 14 | Farmington PCRB $60M | 6/1/24 | 6/1/29 | 5 | 3.875% | 60,000,000 | 60,000,000 |
| 15 | Farmington PCRB $65M | 6/1/24 | 6/1/29 | 5 | 3.875% | 65,000,000 | 65,000,000 |
| 16 | Maricopa PCRB $39.3M | 10/1/21 | 10/1/26 | 5 | 0.875% | 39,300,000 | 39,300,000 |
| 17 | Maricopa PCRB $21M | 10/1/21 | 10/1/26 | 5 | 0.875% | 21,000,000 | 21,000,000 |
| 18 | Senior Unsecured Notes $88M | 5/15/18 | 5/15/28 | 10 | 3.680% | 88,000,000 | 88,000,000 |
| 19 | Senior Unsecured Notes $15M | 8/1/18 | 8/1/28 | 10 | 3.780% | 15,000,000 | 15,000,000 |
| 20 | Senior Unsecured Notes $38M | 5/15/18 | 5/15/33 | 15 | 3.930% | 38,000,000 | 38,000,000 |
| 21 | Senior Unsecured Notes $45M | 5/15/18 | 5/15/38 | 20 | 4.220% | 45,000,000 | 45,000,000 |
| 22 | Senior Unsecured Notes $20M | 5/15/18 | 5/15/48 | 30 | 4.500% | 20,000,000 | 20,000,000 |
| 23 | Senior Unsecured Notes $85M | 8/1/18 | 8/1/48 | 30 | 4.600% | 85,000,000 | 85,000,000 |
| 24 | Senior Unsecured Notes $150M | 4/30/20 | 4/30/30 | 10 | 3.210% | 150,000,000 | 150,000,000 |
| 25 | Senior Unsecured Notes $50M | 4/30/20 | 4/29/39 | 19 | 3.570% | 50,000,000 | 50,000,000 |
| 26 | Senior Unsecured Notes $100M | 12/2/21 | 12/30/41 | 20 | 2.970% | 100,000,000 | 100,000,000 |
| 27 | Senior Unsecured Notes $80M | 7/14/21 | 7/15/33 | 12 | 2.590% | 80,000,000 | 80,000,000 |
| 28 | Senior Unsecured Notes $80M | 7/14/21 | 7/15/41 | 20 | 3.140% | 80,000,000 | 80,000,000 |
| 29 | Senior Unsecured Notes $50M | 12/2/21 | 12/30/31 | 10 | 2.290% | 50,000,000 | 50,000,000 |
| 30 | Senior Unsecured Notes $150M | 4/28/23 | 4/28/35 | 12 | 5.510% | 150,000,000 | 150,000,000 |
| 31 | Senior Unsecured Notes $50M | 4/28/23 | 4/28/53 | 30 | 5.920% | 50,000,000 | 50,000,000 |
| 32 | Senior Unsecured Notes $125M | 4/23/25 | 6/1/32 | 7 | 5.750% | 125,000,000 | 125,000,000 |
| 33 | Senior Unsecured Notes $175M | 4/23/25 | 6/1/37 | 12 | 6.130% | 175,000,000 | 175,000,000 |
| 34 | Senior Unsecured Notes $200M | 7/31/25 | 7/31/31 | 6 | 5.470% | 200,000,000 | 200,000,000 |
| 35 | Senior Unsecured Notes $150M | 7/31/25 | 7/31/36 | 11 | 6.030% | 150,000,000 | 150,000,000 |
| 36 | Totals | | | | | 2,225,345,000 | 2,225,345,000 |

| | A | B | C | H | I | J | K |
|---|---|---|---|---|---|---|---|
| 1 | **Public Service Company of New Mexico** | | | | | | |
| 2 | **Schedule G-3** | | | | | | |
| 3 | **Embedded Cost of Borrowed Capital with Term** | | | | | | |
| 4 | **of Maturity in Excess of One Year from Date of Issue** | | | | | | |
| 5 | **Base Period Ending 6/30/2026** | | | | | | |
| 6 | **This schedule is sponsored by PNM Witness Agrawal** | | | | | | |
| 7 | | | | | | | |
| 8 | **Description** | **Issue Date** | **Maturity Date** | **Annual Interest Expense** | **Premium, Discount & Underwriter Commission** | **Expense of Issue** | **Net Proceeds** |
| 9 | Farmington PCRB $146M | 10/1/21 | 4/1/33 | 3,139,000 | - | 1,017,975 | 144,982,025 |
| 10 | Maricopa PCRB $36M | 6/1/24 | 6/1/29 | 1,395,000 | - | 286,576 | 35,713,424 |
| 11 | Farmington PCRB $37M | 6/1/24 | 6/1/29 | 1,433,750 | - | 294,536 | 36,705,464 |
| 12 | Farmington PCRB $40.045M | 10/1/21 | 10/1/26 | 350,394 | - | 287,850 | 39,757,150 |
| 13 | Farmington PCRB $130M | 6/1/23 | 6/1/28 | 5,070,000 | - | 1,106,950 | 128,893,050 |
| 14 | Farmington PCRB $60M | 6/1/24 | 6/1/29 | 2,325,000 | - | 477,626 | 59,522,374 |
| 15 | Farmington PCRB $65M | 6/1/24 | 6/1/29 | 2,518,750 | - | 517,428 | 64,482,572 |
| 16 | Maricopa PCRB $39.3M | 10/1/21 | 10/1/26 | 343,875 | - | 282,494 | 39,017,506 |
| 17 | Maricopa PCRB $21M | 10/1/21 | 10/1/26 | 183,750 | - | 150,951 | 20,849,049 |
| 18 | Senior Unsecured Notes $88M | 5/15/18 | 5/15/28 | 3,238,400 | - | 619,395 | 87,380,605 |
| 19 | Senior Unsecured Notes $15M | 8/1/18 | 8/1/28 | 567,000 | - | 105,579 | 14,894,421 |
| 20 | Senior Unsecured Notes $38M | 5/15/18 | 5/15/33 | 1,493,400 | - | 267,456 | 37,732,544 |
| 21 | Senior Unsecured Notes $45M | 5/15/18 | 5/15/38 | 1,899,000 | - | 316,736 | 44,683,264 |
| 22 | Senior Unsecured Notes $20M | 5/15/18 | 5/15/48 | 900,000 | - | 140,772 | 19,859,228 |
| 23 | Senior Unsecured Notes $85M | 8/1/18 | 8/1/48 | 3,910,000 | - | 598,279 | 84,401,721 |
| 24 | Senior Unsecured Notes $150M | 4/30/20 | 4/30/30 | 4,815,000 | - | 1,583,545 | 148,416,455 |
| 25 | Senior Unsecured Notes $50M | 4/30/20 | 4/29/39 | 1,785,000 | - | 527,848 | 49,472,152 |
| 26 | Senior Unsecured Notes $100M | 12/2/21 | 12/30/41 | 2,970,000 | - | 586,738 | 99,413,262 |
| 27 | Senior Unsecured Notes $80M | 7/14/21 | 7/15/33 | 2,072,000 | - | 459,480 | 79,540,520 |
| 28 | Senior Unsecured Notes $80M | 7/14/21 | 7/15/41 | 2,512,000 | - | 459,480 | 79,540,520 |
| 29 | Senior Unsecured Notes $50M | 12/2/21 | 12/30/31 | 1,145,000 | - | 293,369 | 49,706,631 |
| 30 | Senior Unsecured Notes $150M | 4/28/23 | 4/28/35 | 8,265,000 | - | 879,333 | 149,120,667 |
| 31 | Senior Unsecured Notes $50M | 4/28/23 | 4/28/53 | 2,960,000 | - | 293,111 | 49,706,889 |
| 32 | Senior Unsecured Notes $125M | 4/23/25 | 6/1/32 | 7,187,500 | - | 691,928 | 124,308,072 |
| 33 | Senior Unsecured Notes $175M | 4/23/25 | 6/1/37 | 10,727,500 | - | 968,699 | 174,031,301 |
| 34 | Senior Unsecured Notes $200M | 7/31/25 | 7/31/31 | 10,940,000 | - | 1,117,127 | 198,882,873 |
| 35 | Senior Unsecured Notes $150M | 7/31/25 | 7/31/36 | 9,045,000 | - | 837,845 | 149,162,155 |
| 36 | Totals | | | 93,191,319 | - | 15,169,105 | 2,210,175,895 |

| | A | B | C | L | M | N | O |
|---|---|---|---|---|---|---|---|
| 1 | **Public Service Company of New Mexico** | | | | | | |
| 2 | **Schedule G-3** | | | | | | |
| 3 | **Embedded Cost of Borrowed Capital with Term** | | | | | | |
| 4 | **of Maturity in Excess of One Year from Date of Issue** | | | | | | |
| 5 | **Base Period Ending 6/30/2026** | | | | | | |
| 6 | **This schedule is sponsored by PNM Witness Agrawal** | | | | | | |
| 7 | | | | | | | |
| 8 | **Description** | **Issue Date** | **Maturity Date** | **Net Proceeds Per Unit** | **Effective Yield to Maturity** | **Principal Outstanding** | **Annual Interest Requirement** |
| 9 | Farmington PCRB $146M | 10/1/21 | 4/1/33 | 0.99 | 2.22% | 146,000,000 | 3,223,831 |
| 10 | Maricopa PCRB $36M | 6/1/24 | 6/1/29 | 0.99 | 4.05% | 36,000,000 | 1,452,315 |
| 11 | Farmington PCRB $37M | 6/1/24 | 6/1/29 | 0.99 | 4.05% | 37,000,000 | 1,492,657 |
| 12 | Farmington PCRB $40.045M | 10/1/21 | 10/1/26 | 0.99 | 1.02% | 40,045,000 | 407,964 |
| 13 | Farmington PCRB $130M | 6/1/23 | 6/1/28 | 0.99 | 4.09% | 130,000,000 | 5,291,390 |
| 14 | Farmington PCRB $60M | 6/1/24 | 6/1/29 | 0.99 | 4.05% | 60,000,000 | 2,420,525 |
| 15 | Farmington PCRB $65M | 6/1/24 | 6/1/29 | 0.99 | 4.05% | 65,000,000 | 2,622,236 |
| 16 | Maricopa PCRB $39.3M | 10/1/21 | 10/1/26 | 0.99 | 1.02% | 39,300,000 | 400,374 |
| 17 | Maricopa PCRB $21M | 10/1/21 | 10/1/26 | 0.99 | 1.02% | 21,000,000 | 213,940 |
| 18 | Senior Unsecured Notes $88M | 5/15/18 | 5/15/28 | 0.99 | 3.77% | 88,000,000 | 3,300,339 |
| 19 | Senior Unsecured Notes $15M | 8/1/18 | 8/1/28 | 0.99 | 3.87% | 15,000,000 | 577,558 |
| 20 | Senior Unsecured Notes $38M | 5/15/18 | 5/15/33 | 0.99 | 3.99% | 38,000,000 | 1,511,230 |
| 21 | Senior Unsecured Notes $45M | 5/15/18 | 5/15/38 | 0.99 | 4.27% | 45,000,000 | 1,914,837 |
| 22 | Senior Unsecured Notes $20M | 5/15/18 | 5/15/48 | 0.99 | 4.54% | 20,000,000 | 904,692 |
| 23 | Senior Unsecured Notes $85M | 8/1/18 | 8/1/48 | 0.99 | 4.64% | 85,000,000 | 3,929,943 |
| 24 | Senior Unsecured Notes $150M | 4/30/20 | 4/30/30 | 0.99 | 3.34% | 150,000,000 | 4,973,355 |
| 25 | Senior Unsecured Notes $50M | 4/30/20 | 4/29/39 | 0.99 | 3.65% | 50,000,000 | 1,812,781 |
| 26 | Senior Unsecured Notes $100M | 12/2/21 | 12/30/41 | 0.99 | 3.01% | 100,000,000 | 2,999,337 |
| 27 | Senior Unsecured Notes $80M | 7/14/21 | 7/15/33 | 0.99 | 2.65% | 80,000,000 | 2,110,290 |
| 28 | Senior Unsecured Notes $80M | 7/14/21 | 7/15/41 | 0.99 | 3.18% | 80,000,000 | 2,534,974 |
| 29 | Senior Unsecured Notes $50M | 12/2/21 | 12/30/31 | 0.99 | 2.36% | 50,000,000 | 1,174,337 |
| 30 | Senior Unsecured Notes $150M | 4/28/23 | 4/28/35 | 0.99 | 5.58% | 150,000,000 | 8,338,278 |
| 31 | Senior Unsecured Notes $50M | 4/28/23 | 4/28/53 | 0.99 | 5.96% | 50,000,000 | 2,969,770 |
| 32 | Senior Unsecured Notes $125M | 4/23/25 | 6/1/32 | 0.99 | 5.85% | 125,000,000 | 7,286,347 |
| 33 | Senior Unsecured Notes $175M | 4/23/25 | 6/1/37 | 0.99 | 6.20% | 175,000,000 | 10,808,225 |
| 34 | Senior Unsecured Notes $200M | 7/31/25 | 7/31/31 | 0.99 | 5.58% | 200,000,000 | 11,126,188 |
| 35 | Senior Unsecured Notes $150M | 7/31/25 | 7/31/36 | 0.99 | 6.10% | 150,000,000 | 9,121,168 |
| 36 | Totals | | | | | 2,225,345,000 | 94,918,881 |

| | A | B | C | P | Q |
|---|---|---|---|---|---|
| 1 | **Public Service Company of New Mexico** | | | | |
| 2 | **Schedule G-3** | | | | |
| 3 | **Embedded Cost of Borrowed Capital with Term** | | | | |
| 4 | **of Maturity in Excess of One Year from Date of Issue** | | | | |
| 5 | **Base Period Ending 6/30/2026** | | | | |
| 6 | **This schedule is sponsored by PNM Witness Agrawal** | | | | |
| 7 | | | | | |
| 8 | **Description** | **Issue Date** | **Maturity Date** | **Weighted Effective Cost Rate** | **Reference** |
| 9 | Farmington PCRB $146M | 10/1/21 | 4/1/33 | 0.15% | |
| 10 | Maricopa PCRB $36M | 6/1/24 | 6/1/29 | 0.07% | |
| 11 | Farmington PCRB $37M | 6/1/24 | 6/1/29 | 0.07% | |
| 12 | Farmington PCRB $40.045M | 10/1/21 | 10/1/26 | 0.02% | |
| 13 | Farmington PCRB $130M | 6/1/23 | 6/1/28 | 0.24% | |
| 14 | Farmington PCRB $60M | 6/1/24 | 6/1/29 | 0.11% | |
| 15 | Farmington PCRB $65M | 6/1/24 | 6/1/29 | 0.12% | |
| 16 | Maricopa PCRB $39.3M | 10/1/21 | 10/1/26 | 0.02% | |
| 17 | Maricopa PCRB $21M | 10/1/21 | 10/1/26 | 0.01% | |
| 18 | Senior Unsecured Notes $88M | 5/15/18 | 5/15/28 | 0.15% | |
| 19 | Senior Unsecured Notes $15M | 8/1/18 | 8/1/28 | 0.03% | |
| 20 | Senior Unsecured Notes $38M | 5/15/18 | 5/15/33 | 0.07% | |
| 21 | Senior Unsecured Notes $45M | 5/15/18 | 5/15/38 | 0.09% | |
| 22 | Senior Unsecured Notes $20M | 5/15/18 | 5/15/48 | 0.04% | |
| 23 | Senior Unsecured Notes $85M | 8/1/18 | 8/1/48 | 0.18% | |
| 24 | Senior Unsecured Notes $150M | 4/30/20 | 4/30/30 | 0.23% | |
| 25 | Senior Unsecured Notes $50M | 4/30/20 | 4/29/39 | 0.08% | |
| 26 | Senior Unsecured Notes $100M | 12/2/21 | 12/30/41 | 0.14% | |
| 27 | Senior Unsecured Notes $80M | 7/14/21 | 7/15/33 | 0.10% | |
| 28 | Senior Unsecured Notes $80M | 7/14/21 | 7/15/41 | 0.11% | |
| 29 | Senior Unsecured Notes $50M | 12/2/21 | 12/30/31 | 0.05% | |
| 30 | Senior Unsecured Notes $150M | 4/28/23 | 4/28/35 | 0.38% | |
| 31 | Senior Unsecured Notes $50M | 4/28/23 | 4/28/53 | 0.13% | |
| 32 | Senior Unsecured Notes $125M | 4/23/25 | 6/1/32 | 0.33% | |
| 33 | Senior Unsecured Notes $175M | 4/23/25 | 6/1/37 | 0.49% | |
| 34 | Senior Unsecured Notes $200M | 7/31/25 | 7/31/31 | 0.50% | |
| 35 | Senior Unsecured Notes $150M | 7/31/25 | 7/31/36 | 0.41% | |
| 36 | Totals | | | 4.29% | Interest Requirement and Cost Rate |

| | A |
|---|---|
| 1 | **Public Service Company of New Mexico** |
| 2 | **Schedule G-3** |
| 3 | **Embedded Cost of Borrowed Capital with Term** |
| 4 | **of Maturity in Excess of One Year from Date of Issue** |
| 5 | **Base Period Ending 6/30/2026 (Notes)** |
| 6 | **This schedule is sponsored by PNM Witness Agrawal** |
| 7 | |
| 8 | This schedule excludes $330.2 million of debt held at Energy Transition Bond Company I. |
| 9 | Debt authorized in accordance with NMSA 62-6-8 is excluded from the weighted cost of long-term debt calculation. |
| 10 | PNM does not have any interest coverage requirements in the company’s bond indentures. |
| 11 | Provides data to schedules/files (sheets): G-01 Base and Test (G-1 Base). |
| 12 | Please refer to direct testimony of PNM Witness Agrawal for discussion of changes/adjustments. |
| 13 | Base period data is historical information from the Company's Book Balance Amounts. |
| 14 | Please note that totals for Net Proceeds and Principal Outstanding exclude refinanced amounts. These totals reflect |
| 15 | year end balances for each bond tranche. |

| | A | B | C | D | E | F | G |
|---|---|---|---|---|---|---|---|
| 1 | **Public Service Company of New Mexico** | | | | | | |
| 2 | **Schedule G-3** | | | | | | |
| 3 | **Embedded Cost of Borrowed Capital with Term** | | | | | | |
| 4 | **of Maturity in Excess of One Year from Date of Issue** | | | | | | |
| 5 | **Linkage Ending 9/30/2027** | | | | | | |
| 6 | **This schedule is sponsored by PNM Witness Agrawal** | | | | | | |
| 7 | | | | | | | |
| 8 | **Description** | **Issue Date** | **Maturity Date** | **Bond Term** | **Interest Rate** | **Principal Amount of Issue** | **Price at Offering/Gross Proceeds** |
| 9 | Farmington PCRB $146M | 10/1/21 | 4/1/33 | 12 | 2.150% | 146,000,000 | 146,000,000 |
| 10 | Maricopa PCRB $36M | 6/1/24 | 6/1/29 | 5 | 3.875% | 36,000,000 | 36,000,000 |
| 11 | Farmington PCRB $37M | 6/1/24 | 6/1/29 | 5 | 3.875% | 37,000,000 | 37,000,000 |
| 12 | Farmington PCRB $40.045M | 10/1/26 | 10/1/30 | 4 | 4.125% | 40,045,000 | 40,045,000 |
| 13 | Farmington PCRB $130M | 6/1/23 | 6/1/28 | 5 | 3.900% | 130,000,000 | 130,000,000 |
| 14 | Farmington PCRB $60M | 6/1/24 | 6/1/29 | 5 | 3.875% | 60,000,000 | 60,000,000 |
| 15 | Farmington PCRB $65M | 6/1/24 | 6/1/29 | 5 | 3.875% | 65,000,000 | 65,000,000 |
| 16 | Maricopa PCRB $39.3M | 10/1/26 | 10/1/30 | 4 | 4.125% | 39,300,000 | 39,300,000 |
| 17 | Maricopa PCRB $21M | 10/1/26 | 10/1/30 | 4 | 4.125% | 21,000,000 | 21,000,000 |
| 18 | Senior Unsecured Notes $88M | 5/15/18 | 5/15/28 | 10 | 3.680% | 88,000,000 | 88,000,000 |
| 19 | Senior Unsecured Notes $15M | 8/1/18 | 8/1/28 | 10 | 3.780% | 15,000,000 | 15,000,000 |
| 20 | Senior Unsecured Notes $38M | 5/15/18 | 5/15/33 | 15 | 3.930% | 38,000,000 | 38,000,000 |
| 21 | Senior Unsecured Notes $45M | 5/15/18 | 5/15/38 | 20 | 4.220% | 45,000,000 | 45,000,000 |
| 22 | Senior Unsecured Notes $20M | 5/15/18 | 5/15/48 | 30 | 4.500% | 20,000,000 | 20,000,000 |
| 23 | Senior Unsecured Notes $85M | 8/1/18 | 8/1/48 | 30 | 4.600% | 85,000,000 | 85,000,000 |
| 24 | Senior Unsecured Notes $150M | 4/30/20 | 4/30/30 | 10 | 3.210% | 150,000,000 | 150,000,000 |

| | A | B | C | D | E | F | G |
|---|---|---|---|---|---|---|---|
| 1 | **Public Service Company of New Mexico** | | | | | | |
| 2 | **Schedule G-3** | | | | | | |
| 3 | **Embedded Cost of Borrowed Capital with Term** | | | | | | |
| 4 | **of Maturity in Excess of One Year from Date of Issue** | | | | | | |
| 5 | **Linkage Ending 9/30/2027** | | | | | | |
| 6 | **This schedule is sponsored by PNM Witness Agrawal** | | | | | | |
| 7 | | | | | | | |
| 8 | **Description** | **Issue Date** | **Maturity Date** | **Bond Term** | **Interest Rate** | **Principal Amount of Issue** | **Price at Offering/Gross Proceeds** |
| 25 | Senior Unsecured Notes $50M | 4/30/20 | 4/29/39 | 19 | 3.570% | 50,000,000 | 50,000,000 |
| 26 | Senior Unsecured Notes $100M | 12/2/21 | 12/30/41 | 20 | 2.970% | 100,000,000 | 100,000,000 |
| 27 | Senior Unsecured Notes $80M | 7/14/21 | 7/15/33 | 12 | 2.590% | 80,000,000 | 80,000,000 |
| 28 | Senior Unsecured Notes $80M | 7/14/21 | 7/15/41 | 20 | 3.140% | 80,000,000 | 80,000,000 |
| 29 | Senior Unsecured Notes $50M | 12/2/21 | 12/30/31 | 10 | 2.290% | 50,000,000 | 50,000,000 |
| 30 | Senior Unsecured Notes $150M | 4/28/23 | 4/28/35 | 12 | 5.510% | 150,000,000 | 150,000,000 |
| 31 | Senior Unsecured Notes $50M | 4/28/23 | 4/28/53 | 30 | 5.920% | 50,000,000 | 50,000,000 |
| 32 | Senior Unsecured Notes $125M | 4/23/25 | 6/1/32 | 7 | 5.750% | 125,000,000 | 125,000,000 |
| 33 | Senior Unsecured Notes $175M | 4/23/25 | 6/1/37 | 12 | 6.130% | 175,000,000 | 175,000,000 |
| 34 | Senior Unsecured Notes $200M | 7/31/25 | 7/31/31 | 6 | 5.470% | 200,000,000 | 200,000,000 |
| 35 | Senior Unsecured Notes $150M | 7/31/25 | 7/31/36 | 11 | 6.030% | 150,000,000 | 150,000,000 |
| 36 | Senior Unsecured Notes $115M (New) | 8/19/26 | 8/31/29 | 3 | 5.440% | 115,000,000 | 115,000,000 |
| 37 | Senior Unsecured Notes $50M (New) | 8/19/26 | 8/31/34 | 8 | 5.820% | 50,000,000 | 50,000,000 |
| 38 | Senior Unsecured Notes $35M (New) | 8/19/26 | 8/31/38 | 12 | 6.120% | 35,000,000 | 35,000,000 |
| 39 | Senior Unsecured Notes $400M (New) | 2/15/27 | 2/15/47 | 20 | 6.530% | 400,000,000 | 400,000,000 |
| 40 | | | | | | | - |
| 41 | Totals | | | | | 2,825,345,000 | 2,825,345,000 |

| | A | B | C | H | I | J | K |
|---|---|---|---|---|---|---|---|
| 1 | **Public Service Company of New Mexico** | | | | | | |
| 2 | **Schedule G-3** | | | | | | |
| 3 | **Embedded Cost of Borrowed Capital with Term** | | | | | | |
| 4 | **of Maturity in Excess of One Year from Date of Issue** | | | | | | |
| 5 | **Linkage Ending 9/30/2027** | | | | | | |
| 6 | **This schedule is sponsored by PNM Witness Agrawal** | | | | | | |
| 7 | | | | | | | |
| 8 | **Description** | **Issue Date** | **Maturity Date** | **Annual Interest Expense** | **Premium, Discount & Underwriter Commission** | **Expense of Issue** | **Net Proceeds** |
| 9 | Farmington PCRB $146M | 10/1/21 | 4/1/33 | 3,139,000 | - | 1,017,975 | 144,982,025 |
| 10 | Maricopa PCRB $36M | 6/1/24 | 6/1/29 | 1,395,000 | - | 286,576 | 35,713,424 |
| 11 | Farmington PCRB $37M | 6/1/24 | 6/1/29 | 1,433,750 | - | 294,536 | 36,705,464 |
| 12 | Farmington PCRB $40.045M | 10/1/26 | 10/1/30 | 1,651,856 | - | 220,248 | 39,824,753 |
| 13 | Farmington PCRB $130M | 6/1/23 | 6/1/28 | 5,070,000 | - | 1,106,950 | 128,893,050 |
| 14 | Farmington PCRB $60M | 6/1/24 | 6/1/29 | 2,325,000 | - | 477,626 | 59,522,374 |
| 15 | Farmington PCRB $65M | 6/1/24 | 6/1/29 | 2,518,750 | - | 517,428 | 64,482,572 |
| 16 | Maricopa PCRB $39.3M | 10/1/26 | 10/1/30 | 1,621,125 | - | 216,150 | 39,083,850 |
| 17 | Maricopa PCRB $21M | 10/1/26 | 10/1/30 | 866,250 | - | 115,500 | 20,884,500 |
| 18 | Senior Unsecured Notes $88M | 5/15/18 | 5/15/28 | 3,238,400 | - | 619,395 | 87,380,605 |
| 19 | Senior Unsecured Notes $15M | 8/1/18 | 8/1/28 | 567,000 | - | 105,579 | 14,894,421 |
| 20 | Senior Unsecured Notes $38M | 5/15/18 | 5/15/33 | 1,493,400 | - | 267,456 | 37,732,544 |
| 21 | Senior Unsecured Notes $45M | 5/15/18 | 5/15/38 | 1,899,000 | - | 316,736 | 44,683,264 |
| 22 | Senior Unsecured Notes $20M | 5/15/18 | 5/15/48 | 900,000 | - | 140,772 | 19,859,228 |
| 23 | Senior Unsecured Notes $85M | 8/1/18 | 8/1/48 | 3,910,000 | - | 598,279 | 84,401,721 |
| 24 | Senior Unsecured Notes $150M | 4/30/20 | 4/30/30 | 4,815,000 | - | 1,583,545 | 148,416,455 |

| | A | B | C | H | I | J | K |
|---|---|---|---|---|---|---|---|
| 1 | **Public Service Company of New Mexico** | | | | | | |
| 2 | **Schedule G-3** | | | | | | |
| 3 | **Embedded Cost of Borrowed Capital with Term** | | | | | | |
| 4 | **of Maturity in Excess of One Year from Date of Issue** | | | | | | |
| 5 | **Linkage Ending 9/30/2027** | | | | | | |
| 6 | **This schedule is sponsored by PNM Witness Agrawal** | | | | | | |
| 7 | | | | | | | |
| 8 | **Description** | **Issue Date** | **Maturity Date** | **Annual Interest Expense** | **Premium, Discount & Underwriter Commission** | **Expense of Issue** | **Net Proceeds** |
| 25 | Senior Unsecured Notes $50M | 4/30/20 | 4/29/39 | 1,785,000 | - | 527,848 | 49,472,152 |
| 26 | Senior Unsecured Notes $100M | 12/2/21 | 12/30/41 | 2,970,000 | - | 586,738 | 99,413,262 |
| 27 | Senior Unsecured Notes $80M | 7/14/21 | 7/15/33 | 2,072,000 | - | 459,480 | 79,540,520 |
| 28 | Senior Unsecured Notes $80M | 7/14/21 | 7/15/41 | 2,512,000 | - | 459,480 | 79,540,520 |
| 29 | Senior Unsecured Notes $50M | 12/2/21 | 12/30/31 | 1,145,000 | - | 293,369 | 49,706,631 |
| 30 | Senior Unsecured Notes $150M | 4/28/23 | 4/28/35 | 8,265,000 | - | 879,333 | 149,120,667 |
| 31 | Senior Unsecured Notes $50M | 4/28/23 | 4/28/53 | 2,960,000 | - | 293,111 | 49,706,889 |
| 32 | Senior Unsecured Notes $125M | 4/23/25 | 6/1/32 | 7,187,500 | - | 691,928 | 124,308,072 |
| 33 | Senior Unsecured Notes $175M | 4/23/25 | 6/1/37 | 10,727,500 | - | 968,699 | 174,031,301 |
| 34 | Senior Unsecured Notes $200M | 7/31/25 | 7/31/31 | 10,940,000 | - | 1,117,127 | 198,882,873 |
| 35 | Senior Unsecured Notes $150M | 7/31/25 | 7/31/36 | 9,045,000 | - | 837,845 | 149,162,155 |
| 36 | Senior Unsecured Notes $115M (New) | 8/19/26 | 8/31/29 | 6,256,000 | | 575,000 | 114,425,000 |
| 37 | Senior Unsecured Notes $50M (New) | 8/19/26 | 8/31/34 | 2,910,000 | | 250,000 | 49,750,000 |
| 38 | Senior Unsecured Notes $35M (New) | 8/19/26 | 8/31/38 | 2,142,000 | | 175,000 | 34,825,000 |
| 39 | Senior Unsecured Notes $400M (New) | 2/15/27 | 2/15/47 | 26,120,000 | | 2,000,000 | 398,000,000 |
| 40 | | | | - | | - | - |
| 41 | Totals | | | 133,880,531 | - | 17,999,707 | 2,807,345,293 |

| | A | B | C | L | M | N | O |
|---|---|---|---|---|---|---|---|
| 1 | **Public Service Company of New Mexico** | | | | | | |
| 2 | **Schedule G-3** | | | | | | |
| 3 | **Embedded Cost of Borrowed Capital with Term** | | | | | | |
| 4 | **of Maturity in Excess of One Year from Date of Issue** | | | | | | |
| 5 | **Linkage Ending 9/30/2027** | | | | | | |
| 6 | **This schedule is sponsored by PNM Witness Agrawal** | | | | | | |
| 7 | | | | | | | |
| 8 | **Description** | **Issue Date** | **Maturity Date** | **Net Proceeds Per Unit** | **Effective Yield to Maturity** | **Principal Outstanding** | **Annual Interest Requirement** |
| 9 | Farmington PCRB $146M | 10/1/21 | 4/1/33 | 0.99 | 2.22% | 146,000,000 | 3,223,831 |
| 10 | Maricopa PCRB $36M | 6/1/24 | 6/1/29 | 0.99 | 4.05% | 36,000,000 | 1,452,315 |
| 11 | Farmington PCRB $37M | 6/1/24 | 6/1/29 | 0.99 | 4.05% | 37,000,000 | 1,492,657 |
| 12 | Farmington PCRB $40.045M | 10/1/26 | 10/1/30 | 0.99 | 4.28% | 40,045,000 | 1,706,918 |
| 13 | Farmington PCRB $130M | 6/1/23 | 6/1/28 | 0.99 | 4.09% | 130,000,000 | 5,291,390 |
| 14 | Farmington PCRB $60M | 6/1/24 | 6/1/29 | 0.99 | 4.05% | 60,000,000 | 2,420,525 |
| 15 | Farmington PCRB $65M | 6/1/24 | 6/1/29 | 0.99 | 4.05% | 65,000,000 | 2,622,236 |
| 16 | Maricopa PCRB $39.3M | 10/1/26 | 10/1/30 | 0.99 | 4.28% | 39,300,000 | 1,675,163 |
| 17 | Maricopa PCRB $21M | 10/1/26 | 10/1/30 | 0.99 | 4.28% | 21,000,000 | 895,125 |
| 18 | Senior Unsecured Notes $88M | 5/15/18 | 5/15/28 | 0.99 | 3.77% | 88,000,000 | 3,300,339 |
| 19 | Senior Unsecured Notes $15M | 8/1/18 | 8/1/28 | 0.99 | 3.87% | 15,000,000 | 577,558 |
| 20 | Senior Unsecured Notes $38M | 5/15/18 | 5/15/33 | 0.99 | 3.99% | 38,000,000 | 1,511,230 |
| 21 | Senior Unsecured Notes $45M | 5/15/18 | 5/15/38 | 0.99 | 4.27% | 45,000,000 | 1,914,837 |
| 22 | Senior Unsecured Notes $20M | 5/15/18 | 5/15/48 | 0.99 | 4.54% | 20,000,000 | 904,692 |
| 23 | Senior Unsecured Notes $85M | 8/1/18 | 8/1/48 | 0.99 | 4.64% | 85,000,000 | 3,929,943 |
| 24 | Senior Unsecured Notes $150M | 4/30/20 | 4/30/30 | 0.99 | 3.34% | 150,000,000 | 4,973,355 |

| | A | B | C | L | M | N | O |
|---|---|---|---|---|---|---|---|
| 1 | **Public Service Company of New Mexico** | | | | | | |
| 2 | **Schedule G-3** | | | | | | |
| 3 | **Embedded Cost of Borrowed Capital with Term** | | | | | | |
| 4 | **of Maturity in Excess of One Year from Date of Issue** | | | | | | |
| 5 | **Linkage Ending 9/30/2027** | | | | | | |
| 6 | **This schedule is sponsored by PNM Witness Agrawal** | | | | | | |
| 7 | | | | | | | |
| 8 | **Description** | **Issue Date** | **Maturity Date** | **Net Proceeds Per Unit** | **Effective Yield to Maturity** | **Principal Outstanding** | **Annual Interest Requirement** |
| 25 | Senior Unsecured Notes $50M | 4/30/20 | 4/29/39 | 0.99 | 3.65% | 50,000,000 | 1,812,781 |
| 26 | Senior Unsecured Notes $100M | 12/2/21 | 12/30/41 | 0.99 | 3.01% | 100,000,000 | 2,999,337 |
| 27 | Senior Unsecured Notes $80M | 7/14/21 | 7/15/33 | 0.99 | 2.65% | 80,000,000 | 2,110,290 |
| 28 | Senior Unsecured Notes $80M | 7/14/21 | 7/15/41 | 0.99 | 3.18% | 80,000,000 | 2,534,974 |
| 29 | Senior Unsecured Notes $50M | 12/2/21 | 12/30/31 | 0.99 | 2.36% | 50,000,000 | 1,174,337 |
| 30 | Senior Unsecured Notes $150M | 4/28/23 | 4/28/35 | 0.99 | 5.58% | 150,000,000 | 8,338,278 |
| 31 | Senior Unsecured Notes $50M | 4/28/23 | 4/28/53 | 0.99 | 5.96% | 50,000,000 | 2,969,770 |
| 32 | Senior Unsecured Notes $125M | 4/23/25 | 6/1/32 | 0.99 | 5.85% | 125,000,000 | 7,286,347 |
| 33 | Senior Unsecured Notes $175M | 4/23/25 | 6/1/37 | 0.99 | 6.20% | 175,000,000 | 10,808,225 |
| 34 | Senior Unsecured Notes $200M | 7/31/25 | 7/31/31 | 0.99 | 5.58% | 200,000,000 | 11,126,188 |
| 35 | Senior Unsecured Notes $150M | 7/31/25 | 7/31/36 | 0.99 | 6.10% | 150,000,000 | 9,121,168 |
| 36 | Senior Unsecured Notes $115M (New) | 8/19/26 | 8/31/29 | 1.00 | 5.62% | 115,000,000 | 6,445,418 |
| 37 | Senior Unsecured Notes $50M (New) | 8/19/26 | 8/31/34 | 1.00 | 5.90% | 50,000,000 | 2,941,101 |
| 38 | Senior Unsecured Notes $35M (New) | 8/19/26 | 8/31/38 | 1.00 | 6.18% | 35,000,000 | 2,156,534 |
| 39 | Senior Unsecured Notes $400M (New) | 2/15/27 | 2/15/47 | 1.00 | 6.58% | 400,000,000 | 26,219,932 |
| 40 | | | | - | | - | |
| 41 | Totals | | | | | 2,825,345,000 | 135,936,793 |

| | A | B | C | P | Q |
|---|---|---|---|---|---|
| 1 | **Public Service Company of New Mexico** | | | | |
| 2 | **Schedule G-3** | | | | |
| 3 | **Embedded Cost of Borrowed Capital with Term** | | | | |
| 4 | **of Maturity in Excess of One Year from Date of Issue** | | | | |
| 5 | **Linkage Ending 9/30/2027** | | | | |
| 6 | **This schedule is sponsored by PNM Witness Agrawal** | | | | |
| 7 | | | | | |
| 8 | **Description** | **Issue Date** | **Maturity Date** | **Weighted Effective Cost Rate** | **Reference** |
| 9 | Farmington PCRB $146M | 10/1/21 | 4/1/33 | 0.11% | |
| 10 | Maricopa PCRB $36M | 6/1/24 | 6/1/29 | 0.05% | |
| 11 | Farmington PCRB $37M | 6/1/24 | 6/1/29 | 0.05% | |
| 12 | Farmington PCRB $40.045M | 10/1/26 | 10/1/30 | 0.06% | |
| 13 | Farmington PCRB $130M | 6/1/23 | 6/1/28 | 0.19% | |
| 14 | Farmington PCRB $60M | 6/1/24 | 6/1/29 | 0.09% | |
| 15 | Farmington PCRB $65M | 6/1/24 | 6/1/29 | 0.09% | |
| 16 | Maricopa PCRB $39.3M | 10/1/26 | 10/1/30 | 0.06% | |
| 17 | Maricopa PCRB $21M | 10/1/26 | 10/1/30 | 0.03% | |
| 18 | Senior Unsecured Notes $88M | 5/15/18 | 5/15/28 | 0.12% | |
| 19 | Senior Unsecured Notes $15M | 8/1/18 | 8/1/28 | 0.02% | |
| 20 | Senior Unsecured Notes $38M | 5/15/18 | 5/15/33 | 0.05% | |
| 21 | Senior Unsecured Notes $45M | 5/15/18 | 5/15/38 | 0.07% | |
| 22 | Senior Unsecured Notes $20M | 5/15/18 | 5/15/48 | 0.03% | |
| 23 | Senior Unsecured Notes $85M | 8/1/18 | 8/1/48 | 0.14% | |
| 24 | Senior Unsecured Notes $150M | 4/30/20 | 4/30/30 | 0.18% | |

| | A | B | C | P | Q |
|---|---|---|---|---|---|
| 1 | **Public Service Company of New Mexico** | | | | |
| 2 | **Schedule G-3** | | | | |
| 3 | **Embedded Cost of Borrowed Capital with Term** | | | | |
| 4 | **of Maturity in Excess of One Year from Date of Issue** | | | | |
| 5 | **Linkage Ending 9/30/2027** | | | | |
| 6 | **This schedule is sponsored by PNM Witness Agrawal** | | | | |
| 7 | | | | | |
| 8 | **Description** | **Issue Date** | **Maturity Date** | **Weighted Effective Cost Rate** | **Reference** |
| 25 | Senior Unsecured Notes $50M | 4/30/20 | 4/29/39 | 0.06% | |
| 26 | Senior Unsecured Notes $100M | 12/2/21 | 12/30/41 | 0.11% | |
| 27 | Senior Unsecured Notes $80M | 7/14/21 | 7/15/33 | 0.08% | |
| 28 | Senior Unsecured Notes $80M | 7/14/21 | 7/15/41 | 0.09% | |
| 29 | Senior Unsecured Notes $50M | 12/2/21 | 12/30/31 | 0.04% | |
| 30 | Senior Unsecured Notes $150M | 4/28/23 | 4/28/35 | 0.30% | |
| 31 | Senior Unsecured Notes $50M | 4/28/23 | 4/28/53 | 0.11% | |
| 32 | Senior Unsecured Notes $125M | 4/23/25 | 6/1/32 | 0.26% | |
| 33 | Senior Unsecured Notes $175M | 4/23/25 | 6/1/37 | 0.38% | |
| 34 | Senior Unsecured Notes $200M | 7/31/25 | 7/31/31 | 0.40% | |
| 35 | Senior Unsecured Notes $150M | 7/31/25 | 7/31/36 | 0.32% | |
| 36 | Senior Unsecured Notes $115M (New) | 8/19/26 | 8/31/29 | 0.23% | |
| 37 | Senior Unsecured Notes $50M (New) | 8/19/26 | 8/31/34 | 0.10% | |
| 38 | Senior Unsecured Notes $35M (New) | 8/19/26 | 8/31/38 | 0.08% | |
| 39 | Senior Unsecured Notes $400M (New) | 2/15/27 | 2/15/47 | 0.93% | |
| 40 | | | | | |
| 41 | Totals | | | 4.84% | Interest Requirement and Cost Rate |

| | A |
|---|---|
| 1 | **Public Service Company of New Mexico** |
| 2 | **Schedule G-3** |
| 3 | **Embedded Cost of Borrowed Capital with Term** |
| 4 | **of Maturity in Excess of One Year from Date of Issue** |
| 5 | **Linkage Ending 9/30/2027 (Notes)** |
| 6 | **This schedule is sponsored by PNM Witness Agrawal** |
| 7 | |
| 8 | This schedule excludes $318.7 million of debt held at Energy Transition Bond Company I. |
| 9 | Debt authorized in accordance with NMSA 62-6-8 is excluded from the weighted cost of long-term debt calculation. |
| 10 | Provides data to schedules/files (sheets): G-01 Base and Test (G-1 Linkage). |
| 11 | Please refer to direct testimony of PNM Witness Agrawal for discussion of changes/adjustments. |
| 12 | Please note that totals for Net Proceeds and Principal Outstanding exclude refinanced amounts. These totals reflect |
| 13 | year end balances for each bond tranche. |

| | A | B | C | D | E | F | G | H |
|---|---|---|---|---|---|---|---|---|
| 1 | **Public Service Company of New Mexico** | | | | | | | |
| 2 | **Schedule G-3** | | | | | | | |
| 3 | **Embedded Cost of Borrowed Capital with Term** | | | | | | | |
| 4 | **of Maturity in Excess of One Year from Date of Issue** | | | | | | | |
| 5 | **Test Period Ending 9/30/2028** | | | | | | | |
| 6 | **This schedule is sponsored by PNM Witness Agrawal** | | | | | | | |
| 7 | | | | | | | | |
| 8 | **Description** | **Issue Date** | **Maturity Date** | **Bond Term** | **Interest Rate** | **Principal Amount of Issue** | **Price at Offering/Gross Proceeds** | **Annual Interest Expense** |
| 9 | Farmington PCRB $146M | 10/1/21 | 4/1/33 | 12 | 2.150% | 146,000,000 | 146,000,000 | 3,139,000 |
| 10 | Maricopa PCRB $36M | 6/1/24 | 6/1/29 | 5 | 3.875% | 36,000,000 | 36,000,000 | 1,395,000 |
| 11 | Farmington PCRB $37M | 6/1/24 | 6/1/29 | 5 | 3.875% | 37,000,000 | 37,000,000 | 1,433,750 |
| 12 | Farmington PCRB $40.045M | 10/1/26 | 10/1/30 | 4 | 4.125% | 40,045,000 | 40,045,000 | 1,651,856 |
| 13 | Farmington PCRB $130M | 6/1/23 | 6/1/28 | 5 | 3.900% | 130,000,000 | 130,000,000 | 5,070,000 |
| 14 | Farmington PCRB $130M (Refi) | 6/1/28 | 6/1/33 | 5 | 4.470% | 130,000,000 | 130,000,000 | 5,811,000 |
| 15 | Farmington PCRB $60M | 6/1/24 | 6/1/29 | 5 | 3.875% | 60,000,000 | 60,000,000 | 2,325,000 |
| 16 | Farmington PCRB $65M | 6/1/24 | 6/1/29 | 5 | 3.875% | 65,000,000 | 65,000,000 | 2,518,750 |
| 17 | Maricopa PCRB $39.3M | 10/1/26 | 10/1/30 | 4 | 4.125% | 39,300,000 | 39,300,000 | 1,621,125 |
| 18 | Maricopa PCRB $21M | 10/1/26 | 10/1/30 | 4 | 4.125% | 21,000,000 | 21,000,000 | 866,250 |
| 19 | Senior Unsecured Notes $88M | 5/15/18 | 5/15/28 | 10 | 3.680% | 88,000,000 | 88,000,000 | 3,238,400 |
| 20 | Senior Unsecured Notes $15M | 8/1/18 | 8/1/28 | 10 | 3.780% | 15,000,000 | 15,000,000 | 567,000 |
| 21 | Senior Unsecured Notes $38M | 5/15/18 | 5/15/33 | 15 | 3.930% | 38,000,000 | 38,000,000 | 1,493,400 |
| 22 | Senior Unsecured Notes $45M | 5/15/18 | 5/15/38 | 20 | 4.220% | 45,000,000 | 45,000,000 | 1,899,000 |
| 23 | Senior Unsecured Notes $20M | 5/15/18 | 5/15/48 | 30 | 4.500% | 20,000,000 | 20,000,000 | 900,000 |
| 24 | Senior Unsecured Notes $85M | 8/1/18 | 8/1/48 | 30 | 4.600% | 85,000,000 | 85,000,000 | 3,910,000 |
| 25 | Senior Unsecured Notes $150M | 4/30/20 | 4/30/30 | 10 | 3.210% | 150,000,000 | 150,000,000 | 4,815,000 |
| 26 | Senior Unsecured Notes $50M | 4/30/20 | 4/29/39 | 19 | 3.570% | 50,000,000 | 50,000,000 | 1,785,000 |

| | A | B | C | D | E | F | G | H |
|---|---|---|---|---|---|---|---|---|
| 1 | **Public Service Company of New Mexico** | | | | | | | |
| 2 | **Schedule G-3** | | | | | | | |
| 3 | **Embedded Cost of Borrowed Capital with Term** | | | | | | | |
| 4 | **of Maturity in Excess of One Year from Date of Issue** | | | | | | | |
| 5 | **Test Period Ending 9/30/2028** | | | | | | | |
| 6 | **This schedule is sponsored by PNM Witness Agrawal** | | | | | | | |
| 7 | | | | | | | | |
| 8 | **Description** | **Issue Date** | **Maturity Date** | **Bond Term** | **Interest Rate** | **Principal Amount of Issue** | **Price at Offering/Gross Proceeds** | **Annual Interest Expense** |
| 27 | Senior Unsecured Notes $100M | 12/2/21 | 12/30/41 | 20 | 2.970% | 100,000,000 | 100,000,000 | 2,970,000 |
| 28 | Senior Unsecured Notes $80M | 7/14/21 | 7/15/33 | 12 | 2.590% | 80,000,000 | 80,000,000 | 2,072,000 |
| 29 | Senior Unsecured Notes $80M | 7/14/21 | 7/15/41 | 20 | 3.140% | 80,000,000 | 80,000,000 | 2,512,000 |
| 30 | Senior Unsecured Notes $50M | 12/2/21 | 12/30/31 | 10 | 2.290% | 50,000,000 | 50,000,000 | 1,145,000 |
| 31 | Senior Unsecured Notes $150M | 4/28/23 | 4/28/35 | 12 | 5.510% | 150,000,000 | 150,000,000 | 8,265,000 |
| 32 | Senior Unsecured Notes $50M | 4/28/23 | 4/28/53 | 30 | 5.920% | 50,000,000 | 50,000,000 | 2,960,000 |
| 33 | Senior Unsecured Notes $125M | 4/23/25 | 6/1/32 | 7 | 5.750% | 125,000,000 | 125,000,000 | 7,187,500 |
| 34 | Senior Unsecured Notes $175M | 4/23/25 | 6/1/37 | 12 | 6.130% | 175,000,000 | 175,000,000 | 10,727,500 |
| 35 | Senior Unsecured Notes $200M | 7/31/25 | 7/31/31 | 6 | 5.470% | 200,000,000 | 200,000,000 | 10,940,000 |
| 36 | Senior Unsecured Notes $150M | 7/31/25 | 7/31/36 | 11 | 6.030% | 150,000,000 | 150,000,000 | 9,045,000 |
| 37 | Senior Unsecured Notes $115M | 8/19/26 | 8/31/29 | 3 | 5.440% | 115,000,000 | 115,000,000 | 6,256,000 |
| 38 | Senior Unsecured Notes $50M | 8/19/26 | 8/31/34 | 8 | 5.820% | 50,000,000 | 50,000,000 | 2,910,000 |
| 39 | Senior Unsecured Notes $35M | 8/19/26 | 8/31/38 | 12 | 6.120% | 35,000,000 | 35,000,000 | 2,142,000 |
| 40 | Senior Unsecured Notes $400M | 2/15/27 | 2/15/47 | 20 | 6.530% | 400,000,000 | 400,000,000 | 26,120,000 |
| 41 | Senior Unsecured Notes $275M (New) | 3/15/28 | 3/15/48 | 20 | 6.580% | 275,000,000 | 275,000,000 | 18,095,000 |
| 42 | Senior Unsecured Notes $100M (New) | 5/15/28 | 5/15/48 | 20 | 6.590% | 100,000,000 | 100,000,000 | 6,590,000 |
| 43 | | | | | | | | |
| 44 | Totals | | | | | 3,330,345,000 | 3,330,345,000 | 164,376,531 |

| | A | B | C | I | J | K | L |
|---|---|---|---|---|---|---|---|
| 1 | **Public Service Company of New Mexico** | | | | | | |
| 2 | **Schedule G-3** | | | | | | |
| 3 | **Embedded Cost of Borrowed Capital with Term** | | | | | | |
| 4 | **of Maturity in Excess of One Year from Date of Issue** | | | | | | |
| 5 | **Test Period Ending 9/30/2028** | | | | | | |
| 6 | **This schedule is sponsored by PNM Witness Agrawal** | | | | | | |
| 7 | | | | | | | |
| 8 | **Description** | **Issue Date** | **Maturity Date** | **Premium, Discount & Underwriter Commission** | **Expense of Issue** | **Net Proceeds** | **Weighted Net Proceeds** |
| 9 | Farmington PCRB $146M | 10/1/21 | 4/1/33 | - | 1,017,975 | 144,982,025 | 144,982,025 |
| 10 | Maricopa PCRB $36M | 6/1/24 | 6/1/29 | - | 286,576 | 35,713,424 | 35,713,424 |
| 11 | Farmington PCRB $37M | 6/1/24 | 6/1/29 | - | 294,536 | 36,705,464 | 36,705,464 |
| 12 | Farmington PCRB $40.045M | 10/1/26 | 10/1/30 | - | 220,248 | 39,824,753 | 39,824,753 |
| 13 | Farmington PCRB $130M | 6/1/23 | 6/1/28 | - | 1,106,950 | 128,893,050 | 85,928,700 |
| 14 | Farmington PCRB $130M (Refi) | 6/1/28 | 6/1/33 | - | 715,000 | 129,285,000 | 43,095,000 |
| 15 | Farmington PCRB $60M | 6/1/24 | 6/1/29 | - | 477,626 | 59,522,374 | 59,522,374 |
| 16 | Farmington PCRB $65M | 6/1/24 | 6/1/29 | - | 517,428 | 64,482,572 | 64,482,572 |
| 17 | Maricopa PCRB $39.3M | 10/1/26 | 10/1/30 | - | 216,150 | 39,083,850 | 39,083,850 |
| 18 | Maricopa PCRB $21M | 10/1/26 | 10/1/30 | - | 115,500 | 20,884,500 | 20,884,500 |
| 19 | Senior Unsecured Notes $88M | 5/15/18 | 5/15/28 | - | 619,395 | 87,380,605 | 54,612,878 |
| 20 | Senior Unsecured Notes $15M | 8/1/18 | 8/1/28 | - | 105,579 | 14,894,421 | 12,412,018 |
| 21 | Senior Unsecured Notes $38M | 5/15/18 | 5/15/33 | - | 267,456 | 37,732,544 | 37,732,544 |
| 22 | Senior Unsecured Notes $45M | 5/15/18 | 5/15/38 | - | 316,736 | 44,683,264 | 44,683,264 |
| 23 | Senior Unsecured Notes $20M | 5/15/18 | 5/15/48 | - | 140,772 | 19,859,228 | 19,859,228 |
| 24 | Senior Unsecured Notes $85M | 8/1/18 | 8/1/48 | - | 598,279 | 84,401,721 | 84,401,721 |
| 25 | Senior Unsecured Notes $150M | 4/30/20 | 4/30/30 | - | 1,583,545 | 148,416,455 | 148,416,455 |
| 26 | Senior Unsecured Notes $50M | 4/30/20 | 4/29/39 | - | 527,848 | 49,472,152 | 49,472,152 |

| | A | B | C | I | J | K | L |
|---|---|---|---|---|---|---|---|
| 1 | **Public Service Company of New Mexico** | | | | | | |
| 2 | **Schedule G-3** | | | | | | |
| 3 | **Embedded Cost of Borrowed Capital with Term** | | | | | | |
| 4 | **of Maturity in Excess of One Year from Date of Issue** | | | | | | |
| 5 | **Test Period Ending 9/30/2028** | | | | | | |
| 6 | **This schedule is sponsored by PNM Witness Agrawal** | | | | | | |
| 7 | | | | | | | |
| 8 | **Description** | **Issue Date** | **Maturity Date** | **Premium, Discount & Underwriter Commission** | **Expense of Issue** | **Net Proceeds** | **Weighted Net Proceeds** |
| 27 | Senior Unsecured Notes $100M | 12/2/21 | 12/30/41 | - | 586,738 | 99,413,262 | 99,413,262 |
| 28 | Senior Unsecured Notes $80M | 7/14/21 | 7/15/33 | - | 459,480 | 79,540,520 | 79,540,520 |
| 29 | Senior Unsecured Notes $80M | 7/14/21 | 7/15/41 | - | 459,480 | 79,540,520 | 79,540,520 |
| 30 | Senior Unsecured Notes $50M | 12/2/21 | 12/30/31 | - | 293,369 | 49,706,631 | 49,706,631 |
| 31 | Senior Unsecured Notes $150M | 4/28/23 | 4/28/35 | - | 879,333 | 149,120,667 | 149,120,667 |
| 32 | Senior Unsecured Notes $50M | 4/28/23 | 4/28/53 | - | 293,111 | 49,706,889 | 49,706,889 |
| 33 | Senior Unsecured Notes $125M | 4/23/25 | 6/1/32 | - | 691,928 | 124,308,072 | 124,308,072 |
| 34 | Senior Unsecured Notes $175M | 4/23/25 | 6/1/37 | - | 968,699 | 174,031,301 | 174,031,301 |
| 35 | Senior Unsecured Notes $200M | 7/31/25 | 7/31/31 | - | 1,117,127 | 198,882,873 | 198,882,873 |
| 36 | Senior Unsecured Notes $150M | 7/31/25 | 7/31/36 | - | 837,845 | 149,162,155 | 149,162,155 |
| 37 | Senior Unsecured Notes $115M | 8/19/26 | 8/31/29 | - | 575,000 | 114,425,000 | 114,425,000 |
| 38 | Senior Unsecured Notes $50M | 8/19/26 | 8/31/34 | - | 250,000 | 49,750,000 | 49,750,000 |
| 39 | Senior Unsecured Notes $35M | 8/19/26 | 8/31/38 | - | 175,000 | 34,825,000 | 34,825,000 |
| 40 | Senior Unsecured Notes $400M | 2/15/27 | 2/15/47 | - | 2,000,000 | 398,000,000 | 398,000,000 |
| 41 | Senior Unsecured Notes $275M (New) | 3/15/28 | 3/15/48 | - | 1,375,000 | 273,625,000 | 148,213,542 |
| 42 | Senior Unsecured Notes $100M (New) | 5/15/28 | 5/15/48 | - | 500,000 | 99,500,000 | 37,312,500 |
| 43 | | | | | | | |
| 44 | Totals | | | - | 20,589,707 | 3,309,755,293 | 2,957,751,854 |

| | A | B | C | M | N | O | P |
|---|---|---|---|---|---|---|---|
| 1 | **Public Service Company of New Mexico** | | | | | | |
| 2 | **Schedule G-3** | | | | | | |
| 3 | **Embedded Cost of Borrowed Capital with Term** | | | | | | |
| 4 | **of Maturity in Excess of One Year from Date of Issue** | | | | | | |
| 5 | **Test Period Ending 9/30/2028** | | | | | | |
| 6 | **This schedule is sponsored by PNM Witness Agrawal** | | | | | | |
| 7 | | | | | | | |
| 8 | **Description** | **Issue Date** | **Maturity Date** | **Net Proceeds Per Unit** | **Effective Yield to Maturity** | **Principal Outstanding** | **Weighted Principal Outstanding** |
| 9 | Farmington PCRB $146M | 10/1/21 | 4/1/33 | 0.99 | 2.22% | 146,000,000 | 146,000,000 |
| 10 | Maricopa PCRB $36M | 6/1/24 | 6/1/29 | 0.99 | 4.05% | 36,000,000 | 36,000,000 |
| 11 | Farmington PCRB $37M | 6/1/24 | 6/1/29 | 0.99 | 4.05% | 37,000,000 | 37,000,000 |
| 12 | Farmington PCRB $40.045M | 10/1/26 | 10/1/30 | 0.99 | 4.28% | 40,045,000 | 40,045,000 |
| 13 | Farmington PCRB $130M | 6/1/23 | 6/1/28 | 0.99 | 4.09% | 130,000,000 | 86,666,667 |
| 14 | Farmington PCRB $130M (Refi) | 6/1/28 | 6/1/33 | 0.99 | 4.59% | 130,000,000 | 43,333,333 |
| 15 | Farmington PCRB $60M | 6/1/24 | 6/1/29 | 0.99 | 4.05% | 60,000,000 | 60,000,000 |
| 16 | Farmington PCRB $65M | 6/1/24 | 6/1/29 | 0.99 | 4.05% | 65,000,000 | 65,000,000 |
| 17 | Maricopa PCRB $39.3M | 10/1/26 | 10/1/30 | 0.99 | 4.28% | 39,300,000 | 39,300,000 |
| 18 | Maricopa PCRB $21M | 10/1/26 | 10/1/30 | 0.99 | 4.28% | 21,000,000 | 21,000,000 |
| 19 | Senior Unsecured Notes $88M | 5/15/18 | 5/15/28 | 0.99 | 3.77% | 88,000,000 | 55,000,000 |
| 20 | Senior Unsecured Notes $15M | 8/1/18 | 8/1/28 | 0.99 | 3.87% | 15,000,000 | 12,500,000 |
| 21 | Senior Unsecured Notes $38M | 5/15/18 | 5/15/33 | 0.99 | 3.99% | 38,000,000 | 38,000,000 |
| 22 | Senior Unsecured Notes $45M | 5/15/18 | 5/15/38 | 0.99 | 4.27% | 45,000,000 | 45,000,000 |
| 23 | Senior Unsecured Notes $20M | 5/15/18 | 5/15/48 | 0.99 | 4.54% | 20,000,000 | 20,000,000 |
| 24 | Senior Unsecured Notes $85M | 8/1/18 | 8/1/48 | 0.99 | 4.64% | 85,000,000 | 85,000,000 |
| 25 | Senior Unsecured Notes $150M | 4/30/20 | 4/30/30 | 0.99 | 3.34% | 150,000,000 | 150,000,000 |
| 26 | Senior Unsecured Notes $50M | 4/30/20 | 4/29/39 | 0.99 | 3.65% | 50,000,000 | 50,000,000 |

| | A | B | C | M | N | O | P |
|---|---|---|---|---|---|---|---|
| 1 | **Public Service Company of New Mexico** | | | | | | |
| 2 | **Schedule G-3** | | | | | | |
| 3 | **Embedded Cost of Borrowed Capital with Term** | | | | | | |
| 4 | **of Maturity in Excess of One Year from Date of Issue** | | | | | | |
| 5 | **Test Period Ending 9/30/2028** | | | | | | |
| 6 | **This schedule is sponsored by PNM Witness Agrawal** | | | | | | |
| 7 | | | | | | | |
| 8 | **Description** | **Issue Date** | **Maturity Date** | **Net Proceeds Per Unit** | **Effective Yield to Maturity** | **Principal Outstanding** | **Weighted Principal Outstanding** |
| 27 | Senior Unsecured Notes $100M | 12/2/21 | 12/30/41 | 0.99 | 3.01% | 100,000,000 | 100,000,000 |
| 28 | Senior Unsecured Notes $80M | 7/14/21 | 7/15/33 | 0.99 | 2.65% | 80,000,000 | 80,000,000 |
| 29 | Senior Unsecured Notes $80M | 7/14/21 | 7/15/41 | 0.99 | 3.18% | 80,000,000 | 80,000,000 |
| 30 | Senior Unsecured Notes $50M | 12/2/21 | 12/30/31 | 0.99 | 2.36% | 50,000,000 | 50,000,000 |
| 31 | Senior Unsecured Notes $150M | 4/28/23 | 4/28/35 | 0.99 | 5.58% | 150,000,000 | 150,000,000 |
| 32 | Senior Unsecured Notes $50M | 4/28/23 | 4/28/53 | 0.99 | 5.96% | 50,000,000 | 50,000,000 |
| 33 | Senior Unsecured Notes $125M | 4/23/25 | 6/1/32 | 0.99 | 5.85% | 125,000,000 | 125,000,000 |
| 34 | Senior Unsecured Notes $175M | 4/23/25 | 6/1/37 | 0.99 | 6.20% | 175,000,000 | 175,000,000 |
| 35 | Senior Unsecured Notes $200M | 7/31/25 | 7/31/31 | 0.99 | 5.58% | 200,000,000 | 200,000,000 |
| 36 | Senior Unsecured Notes $150M | 7/31/25 | 7/31/36 | 0.99 | 6.10% | 150,000,000 | 150,000,000 |
| 37 | Senior Unsecured Notes $115M | 8/19/26 | 8/31/29 | 1.00 | 5.62% | 115,000,000 | 115,000,000 |
| 38 | Senior Unsecured Notes $50M | 8/19/26 | 8/31/34 | 1.00 | 5.90% | 50,000,000 | 50,000,000 |
| 39 | Senior Unsecured Notes $35M | 8/19/26 | 8/31/38 | 1.00 | 6.18% | 35,000,000 | 35,000,000 |
| 40 | Senior Unsecured Notes $400M | 2/15/27 | 2/15/47 | 1.00 | 6.58% | 400,000,000 | 400,000,000 |
| 41 | Senior Unsecured Notes $275M (New) | 3/15/28 | 3/15/48 | 1.00 | 6.63% | 275,000,000 | 148,958,333 |
| 42 | Senior Unsecured Notes $100M (New) | 5/15/28 | 5/15/48 | 1.00 | 6.64% | 100,000,000 | 37,500,000 |
| 43 | | | | | | | |
| 44 | Totals | | | | | 3,330,345,000 | 2,976,303,333 |

| | A | B | C | Q | R | S |
|---|---|---|---|---|---|---|
| 1 | **Public Service Company of New Mexico** | | | | | |
| 2 | **Schedule G-3** | | | | | |
| 3 | **Embedded Cost of Borrowed Capital with Term** | | | | | |
| 4 | **of Maturity in Excess of One Year from Date of Issue** | | | | | |
| 5 | **Test Period Ending 9/30/2028** | | | | | |
| 6 | **This schedule is sponsored by PNM Witness Agrawal** | | | | | |
| 7 | | | | | | |
| 8 | **Description** | **Issue Date** | **Maturity Date** | **Interest Requirements** | **Weighted Effective Cost Rate** | **Reference** |
| 9 | Farmington PCRB $146M | 10/1/21 | 4/1/33 | 3,223,831 | 0.11% | |
| 10 | Maricopa PCRB $36M | 6/1/24 | 6/1/29 | 1,452,315 | 0.05% | |
| 11 | Farmington PCRB $37M | 6/1/24 | 6/1/29 | 1,492,657 | 0.05% | |
| 12 | Farmington PCRB $40.045M | 10/1/26 | 10/1/30 | 1,706,918 | 0.06% | |
| 13 | Farmington PCRB $130M | 6/1/23 | 6/1/28 | 3,527,593 | 0.12% | |
| 14 | Farmington PCRB $130M (Refi) | 6/1/28 | 6/1/33 | 1,984,667 | 0.07% | |
| 15 | Farmington PCRB $60M | 6/1/24 | 6/1/29 | 2,420,525 | 0.08% | |
| 16 | Farmington PCRB $65M | 6/1/24 | 6/1/29 | 2,622,236 | 0.09% | |
| 17 | Maricopa PCRB $39.3M | 10/1/26 | 10/1/30 | 1,675,163 | 0.06% | |
| 18 | Maricopa PCRB $21M | 10/1/26 | 10/1/30 | 895,125 | 0.03% | |
| 19 | Senior Unsecured Notes $88M | 5/15/18 | 5/15/28 | 2,062,712 | 0.07% | |
| 20 | Senior Unsecured Notes $15M | 8/1/18 | 8/1/28 | 481,298 | 0.02% | |
| 21 | Senior Unsecured Notes $38M | 5/15/18 | 5/15/33 | 1,511,230 | 0.05% | |
| 22 | Senior Unsecured Notes $45M | 5/15/18 | 5/15/38 | 1,914,837 | 0.06% | |
| 23 | Senior Unsecured Notes $20M | 5/15/18 | 5/15/48 | 904,692 | 0.03% | |
| 24 | Senior Unsecured Notes $85M | 8/1/18 | 8/1/48 | 3,929,943 | 0.13% | |
| 25 | Senior Unsecured Notes $150M | 4/30/20 | 4/30/30 | 4,973,355 | 0.17% | |
| 26 | Senior Unsecured Notes $50M | 4/30/20 | 4/29/39 | 1,812,781 | 0.06% | |

| | A | B | C | Q | R | S |
|---|---|---|---|---|---|---|
| 1 | **Public Service Company of New Mexico** | | | | | |
| 2 | **Schedule G-3** | | | | | |
| 3 | **Embedded Cost of Borrowed Capital with Term** | | | | | |
| 4 | **of Maturity in Excess of One Year from Date of Issue** | | | | | |
| 5 | **Test Period Ending 9/30/2028** | | | | | |
| 6 | **This schedule is sponsored by PNM Witness Agrawal** | | | | | |
| 7 | | | | | | |
| 8 | **Description** | **Issue Date** | **Maturity Date** | **Interest Requirements** | **Weighted Effective Cost Rate** | **Reference** |
| 27 | Senior Unsecured Notes $100M | 12/2/21 | 12/30/41 | 2,999,337 | 0.10% | |
| 28 | Senior Unsecured Notes $80M | 7/14/21 | 7/15/33 | 2,110,290 | 0.07% | |
| 29 | Senior Unsecured Notes $80M | 7/14/21 | 7/15/41 | 2,534,974 | 0.09% | |
| 30 | Senior Unsecured Notes $50M | 12/2/21 | 12/30/31 | 1,174,337 | 0.04% | |
| 31 | Senior Unsecured Notes $150M | 4/28/23 | 4/28/35 | 8,338,278 | 0.28% | |
| 32 | Senior Unsecured Notes $50M | 4/28/23 | 4/28/53 | 2,969,770 | 0.10% | |
| 33 | Senior Unsecured Notes $125M | 4/23/25 | 6/1/32 | 7,286,347 | 0.25% | |
| 34 | Senior Unsecured Notes $175M | 4/23/25 | 6/1/37 | 10,808,225 | 0.37% | |
| 35 | Senior Unsecured Notes $200M | 7/31/25 | 7/31/31 | 11,126,188 | 0.38% | |
| 36 | Senior Unsecured Notes $150M | 7/31/25 | 7/31/36 | 9,121,168 | 0.31% | |
| 37 | Senior Unsecured Notes $115M | 8/19/26 | 8/31/29 | 6,445,418 | 0.22% | |
| 38 | Senior Unsecured Notes $50M | 8/19/26 | 8/31/34 | 2,941,101 | 0.10% | |
| 39 | Senior Unsecured Notes $35M | 8/19/26 | 8/31/38 | 2,156,534 | 0.07% | |
| 40 | Senior Unsecured Notes $400M | 2/15/27 | 2/15/47 | 26,219,932 | 0.89% | |
| 41 | Senior Unsecured Notes $275M (New) | 3/15/28 | 3/15/48 | 9,838,672 | 0.33% | |
| 42 | Senior Unsecured Notes $100M (New) | 5/15/28 | 5/15/48 | 2,480,619 | 0.08% | |
| 43 | | | | | | |
| 44 | Totals | | | 147,143,067 | 4.97% | Interest Requirement and Cost Rate |

| | A |
|---|---|
| 1 | **Public Service Company of New Mexico** |
| 2 | **Schedule G-3** |
| 3 | **Embedded Cost of Borrowed Capital with Term** |
| 4 | **of Maturity in Excess of One Year from Date of Issue** |
| 5 | **Test Period Ending 9/30/2028 (Notes)** |
| 6 | **This schedule is sponsored by PNM Witness Agrawal** |
| 7 | |
| 8 | This schedule excludes $310.6 million of debt held at Energy Transition Bond Company I. |
| 9 | Debt authorized in accordance with NMSA 62-6-8 is excluded from the weighted cost of long-term debt calculation. |
| 10 | Provides data to schedules/files (sheets): G-01 Base and Test (G-1 Test). |
| 11 | Please refer to direct testimony of PNM Witness Agrawal for discussion of changes/adjustments. |

| | A | B | C | D | E | F | G | H |
|---|---|---|---|---|---|---|---|---|
| 1 | **Public Service Company of New Mexico** | | | | | | | |
| 2 | **Schedule G-3** | | | | | | | |
| 3 | **Embedded Cost of Borrowed Capital with Term** | | | | | | | |
| 4 | **of Maturity in Excess of One Year from Date of Issue** | | | | | | | |
| 5 | **Twelve Months Ending 12/31/2028** | | | | | | | |
| 6 | **This schedule is sponsored by PNM Witness Agrawal** | | | | | | | |
| 7 | | | | | | | | |
| 8 | **Description** | **Issue Date** | **Maturity Date** | **Bond Term** | **Interest Rate** | **Principal Amount of Issue** | **Price at Offering/Gross Proceeds** | **Annual Interest Expense** |
| 9 | Farmington PCRB $146M | 10/1/21 | 4/1/33 | 12 | 2.150% | 146,000,000 | 146,000,000 | 3,139,000 |
| 10 | Maricopa PCRB $36M | 6/1/24 | 6/1/29 | 5 | 3.875% | 36,000,000 | 36,000,000 | 1,395,000 |
| 11 | Farmington PCRB $37M | 6/1/24 | 6/1/29 | 5 | 3.875% | 37,000,000 | 37,000,000 | 1,433,750 |
| 12 | Farmington PCRB $40.045M | 10/1/26 | 10/1/30 | 4 | 4.125% | 40,045,000 | 40,045,000 | 1,651,856 |
| 13 | Farmington PCRB $130M | 6/1/23 | 6/1/28 | 5 | 3.900% | 130,000,000 | 130,000,000 | 5,070,000 |
| 14 | Farmington PCRB $130M (Refi) | 6/1/28 | 6/1/33 | 5 | 4.470% | 130,000,000 | 130,000,000 | 5,811,000 |
| 15 | Farmington PCRB $60M | 6/1/24 | 6/1/29 | 5 | 3.875% | 60,000,000 | 60,000,000 | 2,325,000 |
| 16 | Farmington PCRB $65M | 6/1/24 | 6/1/29 | 5 | 3.875% | 65,000,000 | 65,000,000 | 2,518,750 |
| 17 | Maricopa PCRB $39.3M | 10/1/26 | 10/1/30 | 4 | 4.125% | 39,300,000 | 39,300,000 | 1,621,125 |
| 18 | Maricopa PCRB $21M | 10/1/26 | 10/1/30 | 4 | 4.125% | 21,000,000 | 21,000,000 | 866,250 |
| 19 | Senior Unsecured Notes $88M | 5/15/18 | 5/15/28 | 10 | 3.680% | 88,000,000 | 88,000,000 | 3,238,400 |
| 20 | Senior Unsecured Notes $15M | 8/1/18 | 8/1/28 | 10 | 3.780% | 15,000,000 | 15,000,000 | 567,000 |
| 21 | Senior Unsecured Notes $38M | 5/15/18 | 5/15/33 | 15 | 3.930% | 38,000,000 | 38,000,000 | 1,493,400 |
| 22 | Senior Unsecured Notes $45M | 5/15/18 | 5/15/38 | 20 | 4.220% | 45,000,000 | 45,000,000 | 1,899,000 |
| 23 | Senior Unsecured Notes $20M | 5/15/18 | 5/15/48 | 30 | 4.500% | 20,000,000 | 20,000,000 | 900,000 |
| 24 | Senior Unsecured Notes $85M | 8/1/18 | 8/1/48 | 30 | 4.600% | 85,000,000 | 85,000,000 | 3,910,000 |
| 25 | Senior Unsecured Notes $150M | 4/30/20 | 4/30/30 | 10 | 3.210% | 150,000,000 | 150,000,000 | 4,815,000 |
| 26 | Senior Unsecured Notes $50M | 4/30/20 | 4/29/39 | 19 | 3.570% | 50,000,000 | 50,000,000 | 1,785,000 |

| | A | B | C | D | E | F | G | H |
|---|---|---|---|---|---|---|---|---|
| 1 | **Public Service Company of New Mexico** | | | | | | | |
| 2 | **Schedule G-3** | | | | | | | |
| 3 | **Embedded Cost of Borrowed Capital with Term** | | | | | | | |
| 4 | **of Maturity in Excess of One Year from Date of Issue** | | | | | | | |
| 5 | **Twelve Months Ending 12/31/2028** | | | | | | | |
| 6 | **This schedule is sponsored by PNM Witness Agrawal** | | | | | | | |
| 7 | | | | | | | | |
| 8 | **Description** | **Issue Date** | **Maturity Date** | **Bond Term** | **Interest Rate** | **Principal Amount of Issue** | **Price at Offering/Gross Proceeds** | **Annual Interest Expense** |
| 27 | Senior Unsecured Notes $100M | 12/2/21 | 12/30/41 | 20 | 2.970% | 100,000,000 | 100,000,000 | 2,970,000 |
| 28 | Senior Unsecured Notes $80M | 7/14/21 | 7/15/33 | 12 | 2.590% | 80,000,000 | 80,000,000 | 2,072,000 |
| 29 | Senior Unsecured Notes $80M | 7/14/21 | 7/15/41 | 20 | 3.140% | 80,000,000 | 80,000,000 | 2,512,000 |
| 30 | Senior Unsecured Notes $50M | 12/2/21 | 12/30/31 | 10 | 2.290% | 50,000,000 | 50,000,000 | 1,145,000 |
| 31 | Senior Unsecured Notes $150M | 4/28/23 | 4/28/35 | 12 | 5.510% | 150,000,000 | 150,000,000 | 8,265,000 |
| 32 | Senior Unsecured Notes $50M | 4/28/23 | 4/28/53 | 30 | 5.920% | 50,000,000 | 50,000,000 | 2,960,000 |
| 33 | Senior Unsecured Notes $125M | 4/23/25 | 6/1/32 | 7 | 5.750% | 125,000,000 | 125,000,000 | 7,187,500 |
| 34 | Senior Unsecured Notes $175M | 4/23/25 | 6/1/37 | 12 | 6.130% | 175,000,000 | 175,000,000 | 10,727,500 |
| 35 | Senior Unsecured Notes $200M | 7/31/25 | 7/31/31 | 6 | 5.470% | 200,000,000 | 200,000,000 | 10,940,000 |
| 36 | Senior Unsecured Notes $150M | 7/31/25 | 7/31/36 | 11 | 6.030% | 150,000,000 | 150,000,000 | 9,045,000 |
| 37 | Senior Unsecured Notes $115M | 8/19/26 | 8/31/29 | 3 | 5.440% | 115,000,000 | 115,000,000 | 6,256,000 |
| 38 | Senior Unsecured Notes $50M | 8/19/26 | 8/31/34 | 8 | 5.820% | 50,000,000 | 50,000,000 | 2,910,000 |
| 39 | Senior Unsecured Notes $35M | 8/19/26 | 8/31/38 | 12 | 6.120% | 35,000,000 | 35,000,000 | 2,142,000 |
| 40 | Senior Unsecured Notes $400M | 2/15/27 | 2/15/47 | 20 | 6.530% | 400,000,000 | 400,000,000 | 26,120,000 |
| 41 | Senior Unsecured Notes $275M (New) | 3/15/28 | 3/15/48 | 20 | 6.580% | 275,000,000 | 275,000,000 | 18,095,000 |
| 42 | Senior Unsecured Notes $100M (New) | 5/15/28 | 5/15/48 | 20 | 6.590% | 100,000,000 | 100,000,000 | 6,590,000 |
| 43 | | | | | | | | |
| 44 | Totals | | | | | 3,330,345,000 | 3,330,345,000 | 164,376,531 |

| | A | B | C | I | J | K | L |
|---|---|---|---|---|---|---|---|
| 1 | **Public Service Company of New Mexico** | | | | | | |
| 2 | **Schedule G-3** | | | | | | |
| 3 | **Embedded Cost of Borrowed Capital with Term** | | | | | | |
| 4 | **of Maturity in Excess of One Year from Date of Issue** | | | | | | |
| 5 | **Twelve Months Ending 12/31/2028** | | | | | | |
| 6 | **This schedule is sponsored by PNM Witness Agrawal** | | | | | | |
| 7 | | | | | | | |
| 8 | **Description** | **Issue Date** | **Maturity Date** | **Premium, Discount & Underwriter Commission** | **Expense of Issue** | **Net Proceeds** | **Weighted Net Proceeds** |
| 9 | Farmington PCRB $146M | 10/1/21 | 4/1/33 | - | 1,017,975 | 144,982,025 | 144,982,025 |
| 10 | Maricopa PCRB $36M | 6/1/24 | 6/1/29 | - | 286,576 | 35,713,424 | 35,713,424 |
| 11 | Farmington PCRB $37M | 6/1/24 | 6/1/29 | - | 294,536 | 36,705,464 | 36,705,464 |
| 12 | Farmington PCRB $40.045M | 10/1/26 | 10/1/30 | - | 220,248 | 39,824,753 | 39,824,753 |
| 13 | Farmington PCRB $130M | 6/1/23 | 6/1/28 | - | 1,106,950 | 128,893,050 | 53,705,437 |
| 14 | Farmington PCRB $130M (Refi) | 6/1/28 | 6/1/33 | - | 715,000 | 129,285,000 | 75,416,250 |
| 15 | Farmington PCRB $60M | 6/1/24 | 6/1/29 | - | 477,626 | 59,522,374 | 59,522,374 |
| 16 | Farmington PCRB $65M | 6/1/24 | 6/1/29 | - | 517,428 | 64,482,572 | 64,482,572 |
| 17 | Maricopa PCRB $39.3M | 10/1/26 | 10/1/30 | - | 216,150 | 39,083,850 | 39,083,850 |
| 18 | Maricopa PCRB $21M | 10/1/26 | 10/1/30 | - | 115,500 | 20,884,500 | 20,884,500 |
| 19 | Senior Unsecured Notes $88M | 5/15/18 | 5/15/28 | - | 619,395 | 87,380,605 | 32,767,727 |
| 20 | Senior Unsecured Notes $15M | 8/1/18 | 8/1/28 | - | 105,579 | 14,894,421 | 8,688,412 |
| 21 | Senior Unsecured Notes $38M | 5/15/18 | 5/15/33 | - | 267,456 | 37,732,544 | 37,732,544 |
| 22 | Senior Unsecured Notes $45M | 5/15/18 | 5/15/38 | - | 316,736 | 44,683,264 | 44,683,264 |
| 23 | Senior Unsecured Notes $20M | 5/15/18 | 5/15/48 | - | 140,772 | 19,859,228 | 19,859,228 |
| 24 | Senior Unsecured Notes $85M | 8/1/18 | 8/1/48 | - | 598,279 | 84,401,721 | 84,401,721 |
| 25 | Senior Unsecured Notes $150M | 4/30/20 | 4/30/30 | - | 1,583,545 | 148,416,455 | 148,416,455 |
| 26 | Senior Unsecured Notes $50M | 4/30/20 | 4/29/39 | - | 527,848 | 49,472,152 | 49,472,152 |

| | A | B | C | I | J | K | L |
|---|---|---|---|---|---|---|---|
| 1 | **Public Service Company of New Mexico** | | | | | | |
| 2 | **Schedule G-3** | | | | | | |
| 3 | **Embedded Cost of Borrowed Capital with Term** | | | | | | |
| 4 | **of Maturity in Excess of One Year from Date of Issue** | | | | | | |
| 5 | **Twelve Months Ending 12/31/2028** | | | | | | |
| 6 | **This schedule is sponsored by PNM Witness Agrawal** | | | | | | |
| 7 | | | | | | | |
| 8 | **Description** | **Issue Date** | **Maturity Date** | **Premium, Discount & Underwriter Commission** | **Expense of Issue** | **Net Proceeds** | **Weighted Net Proceeds** |
| 27 | Senior Unsecured Notes $100M | 12/2/21 | 12/30/41 | - | 586,738 | 99,413,262 | 99,413,262 |
| 28 | Senior Unsecured Notes $80M | 7/14/21 | 7/15/33 | - | 459,480 | 79,540,520 | 79,540,520 |
| 29 | Senior Unsecured Notes $80M | 7/14/21 | 7/15/41 | - | 459,480 | 79,540,520 | 79,540,520 |
| 30 | Senior Unsecured Notes $50M | 12/2/21 | 12/30/31 | - | 293,369 | 49,706,631 | 49,706,631 |
| 31 | Senior Unsecured Notes $150M | 4/28/23 | 4/28/35 | - | 879,333 | 149,120,667 | 149,120,667 |
| 32 | Senior Unsecured Notes $50M | 4/28/23 | 4/28/53 | - | 293,111 | 49,706,889 | 49,706,889 |
| 33 | Senior Unsecured Notes $125M | 4/23/25 | 6/1/32 | - | 691,928 | 124,308,072 | 124,308,072 |
| 34 | Senior Unsecured Notes $175M | 4/23/25 | 6/1/37 | - | 968,699 | 174,031,301 | 174,031,301 |
| 35 | Senior Unsecured Notes $200M | 7/31/25 | 7/31/31 | - | 1,117,127 | 198,882,873 | 198,882,873 |
| 36 | Senior Unsecured Notes $150M | 7/31/25 | 7/31/36 | - | 837,845 | 149,162,155 | 149,162,155 |
| 37 | Senior Unsecured Notes $115M | 8/19/26 | 8/31/29 | - | 575,000 | 114,425,000 | 114,425,000 |
| 38 | Senior Unsecured Notes $50M | 8/19/26 | 8/31/34 | - | 250,000 | 49,750,000 | 49,750,000 |
| 39 | Senior Unsecured Notes $35M | 8/19/26 | 8/31/38 | - | 175,000 | 34,825,000 | 34,825,000 |
| 40 | Senior Unsecured Notes $400M | 2/15/27 | 2/15/47 | - | 2,000,000 | 398,000,000 | 398,000,000 |
| 41 | Senior Unsecured Notes $275M (New) | 3/15/28 | 3/15/48 | - | 1,375,000 | 273,625,000 | 216,619,792 |
| 42 | Senior Unsecured Notes $100M (New) | 5/15/28 | 5/15/48 | - | 500,000 | 99,500,000 | 62,187,500 |
| 43 | | | | | | | |
| 44 | Totals | | | - | 20,589,707 | 3,143,466,085 | 3,025,562,335 |

| | A | B | C | M | N | O | P |
|---|---|---|---|---|---|---|---|
| 1 | **Public Service Company of New Mexico** | | | | | | |
| 2 | **Schedule G-3** | | | | | | |
| 3 | **Embedded Cost of Borrowed Capital with Term** | | | | | | |
| 4 | **of Maturity in Excess of One Year from Date of Issue** | | | | | | |
| 5 | **Twelve Months Ending 12/31/2028** | | | | | | |
| 6 | **This schedule is sponsored by PNM Witness Agrawal** | | | | | | |
| 7 | | | | | | | |
| 8 | **Description** | **Issue Date** | **Maturity Date** | **Net Proceeds Per Unit** | **Effective Yield to Maturity** | **Principal Outstanding** | **Weighted Principal Outstanding** |
| 9 | Farmington PCRB $146M | 10/1/21 | 4/1/33 | 0.99 | 2.22% | 146,000,000 | 146,000,000 |
| 10 | Maricopa PCRB $36M | 6/1/24 | 6/1/29 | 0.99 | 4.05% | 36,000,000 | 36,000,000 |
| 11 | Farmington PCRB $37M | 6/1/24 | 6/1/29 | 0.99 | 4.05% | 37,000,000 | 37,000,000 |
| 12 | Farmington PCRB $40.045M | 10/1/26 | 10/1/30 | 0.99 | 4.28% | 40,045,000 | 40,045,000 |
| 13 | Farmington PCRB $130M | 6/1/23 | 6/1/28 | 0.99 | 4.09% | 130,000,000 | 54,166,667 |
| 14 | Farmington PCRB $130M (Refi) | 6/1/28 | 6/1/33 | 0.99 | 4.59% | 130,000,000 | 75,833,333 |
| 15 | Farmington PCRB $60M | 6/1/24 | 6/1/29 | 0.99 | 4.05% | 60,000,000 | 60,000,000 |
| 16 | Farmington PCRB $65M | 6/1/24 | 6/1/29 | 0.99 | 4.05% | 65,000,000 | 65,000,000 |
| 17 | Maricopa PCRB $39.3M | 10/1/26 | 10/1/30 | 0.99 | 4.28% | 39,300,000 | 39,300,000 |
| 18 | Maricopa PCRB $21M | 10/1/26 | 10/1/30 | 0.99 | 4.28% | 21,000,000 | 21,000,000 |
| 19 | Senior Unsecured Notes $88M | 5/15/18 | 5/15/28 | 0.99 | 3.77% | 88,000,000 | 33,000,000 |
| 20 | Senior Unsecured Notes $15M | 8/1/18 | 8/1/28 | 0.99 | 3.87% | 15,000,000 | 8,750,000 |
| 21 | Senior Unsecured Notes $38M | 5/15/18 | 5/15/33 | 0.99 | 3.99% | 38,000,000 | 38,000,000 |
| 22 | Senior Unsecured Notes $45M | 5/15/18 | 5/15/38 | 0.99 | 4.27% | 45,000,000 | 45,000,000 |
| 23 | Senior Unsecured Notes $20M | 5/15/18 | 5/15/48 | 0.99 | 4.54% | 20,000,000 | 20,000,000 |
| 24 | Senior Unsecured Notes $85M | 8/1/18 | 8/1/48 | 0.99 | 4.64% | 85,000,000 | 85,000,000 |
| 25 | Senior Unsecured Notes $150M | 4/30/20 | 4/30/30 | 0.99 | 3.34% | 150,000,000 | 150,000,000 |
| 26 | Senior Unsecured Notes $50M | 4/30/20 | 4/29/39 | 0.99 | 3.65% | 50,000,000 | 50,000,000 |

| | A | B | C | M | N | O | P |
|---|---|---|---|---|---|---|---|
| 1 | **Public Service Company of New Mexico** | | | | | | |
| 2 | **Schedule G-3** | | | | | | |
| 3 | **Embedded Cost of Borrowed Capital with Term** | | | | | | |
| 4 | **of Maturity in Excess of One Year from Date of Issue** | | | | | | |
| 5 | **Twelve Months Ending 12/31/2028** | | | | | | |
| 6 | **This schedule is sponsored by PNM Witness Agrawal** | | | | | | |
| 7 | | | | | | | |
| 8 | **Description** | **Issue Date** | **Maturity Date** | **Net Proceeds Per Unit** | **Effective Yield to Maturity** | **Principal Outstanding** | **Weighted Principal Outstanding** |
| 27 | Senior Unsecured Notes $100M | 12/2/21 | 12/30/41 | 0.99 | 3.01% | 100,000,000 | 100,000,000 |
| 28 | Senior Unsecured Notes $80M | 7/14/21 | 7/15/33 | 0.99 | 2.65% | 80,000,000 | 80,000,000 |
| 29 | Senior Unsecured Notes $80M | 7/14/21 | 7/15/41 | 0.99 | 3.18% | 80,000,000 | 80,000,000 |
| 30 | Senior Unsecured Notes $50M | 12/2/21 | 12/30/31 | 0.99 | 2.36% | 50,000,000 | 50,000,000 |
| 31 | Senior Unsecured Notes $150M | 4/28/23 | 4/28/35 | 0.99 | 5.58% | 150,000,000 | 150,000,000 |
| 32 | Senior Unsecured Notes $50M | 4/28/23 | 4/28/53 | 0.99 | 5.96% | 50,000,000 | 50,000,000 |
| 33 | Senior Unsecured Notes $125M | 4/23/25 | 6/1/32 | 0.99 | 5.85% | 125,000,000 | 125,000,000 |
| 34 | Senior Unsecured Notes $175M | 4/23/25 | 6/1/37 | 0.99 | 6.20% | 175,000,000 | 175,000,000 |
| 35 | Senior Unsecured Notes $200M | 7/31/25 | 7/31/31 | 0.99 | 5.58% | 200,000,000 | 200,000,000 |
| 36 | Senior Unsecured Notes $150M | 7/31/25 | 7/31/36 | 0.99 | 6.10% | 150,000,000 | 150,000,000 |
| 37 | Senior Unsecured Notes $115M | 8/19/26 | 8/31/29 | 1.00 | 5.62% | 115,000,000 | 115,000,000 |
| 38 | Senior Unsecured Notes $50M | 8/19/26 | 8/31/34 | 1.00 | 5.90% | 50,000,000 | 50,000,000 |
| 39 | Senior Unsecured Notes $35M | 8/19/26 | 8/31/38 | 1.00 | 6.18% | 35,000,000 | 35,000,000 |
| 40 | Senior Unsecured Notes $400M | 2/15/27 | 2/15/47 | 1.00 | 6.58% | 400,000,000 | 400,000,000 |
| 41 | Senior Unsecured Notes $275M (New) | 3/15/28 | 3/15/48 | 1.00 | 6.63% | 275,000,000 | 217,708,333 |
| 42 | Senior Unsecured Notes $100M (New) | 5/15/28 | 5/15/48 | 1.00 | 6.64% | 100,000,000 | 62,500,000 |
| 43 | | | | | | | |
| 44 | Totals | | | | | 3,330,345,000 | 3,044,303,333 |

| | A | B | C | Q | R | S |
|---|---|---|---|---|---|---|
| 1 | **Public Service Company of New Mexico** | | | | | |
| 2 | **Schedule G-3** | | | | | |
| 3 | **Embedded Cost of Borrowed Capital with Term** | | | | | |
| 4 | **of Maturity in Excess of One Year from Date of Issue** | | | | | |
| 5 | **Twelve Months Ending 12/31/2028** | | | | | |
| 6 | **This schedule is sponsored by PNM Witness Agrawal** | | | | | |
| 7 | | | | | | |
| 8 | **Description** | **Issue Date** | **Maturity Date** | **Interest Requirements** | **Weighted Effective Cost Rate** | **Reference** |
| 9 | Farmington PCRB $146M | 10/1/21 | 4/1/33 | 3,223,831 | 0.11% | |
| 10 | Maricopa PCRB $36M | 6/1/24 | 6/1/29 | 1,452,315 | 0.05% | |
| 11 | Farmington PCRB $37M | 6/1/24 | 6/1/29 | 1,492,657 | 0.05% | |
| 12 | Farmington PCRB $40.045M | 10/1/26 | 10/1/30 | 1,706,918 | 0.06% | |
| 13 | Farmington PCRB $130M | 6/1/23 | 6/1/28 | 2,204,746 | 0.07% | |
| 14 | Farmington PCRB $130M (Refi) | 6/1/28 | 6/1/33 | 3,473,167 | 0.11% | |
| 15 | Farmington PCRB $60M | 6/1/24 | 6/1/29 | 2,420,525 | 0.08% | |
| 16 | Farmington PCRB $65M | 6/1/24 | 6/1/29 | 2,622,236 | 0.09% | |
| 17 | Maricopa PCRB $39.3M | 10/1/26 | 10/1/30 | 1,675,163 | 0.06% | |
| 18 | Maricopa PCRB $21M | 10/1/26 | 10/1/30 | 895,125 | 0.03% | |
| 19 | Senior Unsecured Notes $88M | 5/15/18 | 5/15/28 | 1,237,627 | 0.04% | |
| 20 | Senior Unsecured Notes $15M | 8/1/18 | 8/1/28 | 336,909 | 0.01% | |
| 21 | Senior Unsecured Notes $38M | 5/15/18 | 5/15/33 | 1,511,230 | 0.05% | |
| 22 | Senior Unsecured Notes $45M | 5/15/18 | 5/15/38 | 1,914,837 | 0.06% | |
| 23 | Senior Unsecured Notes $20M | 5/15/18 | 5/15/48 | 904,692 | 0.03% | |
| 24 | Senior Unsecured Notes $85M | 8/1/18 | 8/1/48 | 3,929,943 | 0.13% | |
| 25 | Senior Unsecured Notes $150M | 4/30/20 | 4/30/30 | 4,973,355 | 0.16% | |
| 26 | Senior Unsecured Notes $50M | 4/30/20 | 4/29/39 | 1,812,781 | 0.06% | |

| | A | B | C | Q | R | S |
|---|---|---|---|---|---|---|
| 1 | **Public Service Company of New Mexico** | | | | | |
| 2 | **Schedule G-3** | | | | | |
| 3 | **Embedded Cost of Borrowed Capital with Term** | | | | | |
| 4 | **of Maturity in Excess of One Year from Date of Issue** | | | | | |
| 5 | **Twelve Months Ending 12/31/2028** | | | | | |
| 6 | **This schedule is sponsored by PNM Witness Agrawal** | | | | | |
| 7 | | | | | | |
| 8 | **Description** | **Issue Date** | **Maturity Date** | **Interest Requirements** | **Weighted Effective Cost Rate** | **Reference** |
| 27 | Senior Unsecured Notes $100M | 12/2/21 | 12/30/41 | 2,999,337 | 0.10% | |
| 28 | Senior Unsecured Notes $80M | 7/14/21 | 7/15/33 | 2,110,290 | 0.07% | |
| 29 | Senior Unsecured Notes $80M | 7/14/21 | 7/15/41 | 2,534,974 | 0.08% | |
| 30 | Senior Unsecured Notes $50M | 12/2/21 | 12/30/31 | 1,174,337 | 0.04% | |
| 31 | Senior Unsecured Notes $150M | 4/28/23 | 4/28/35 | 8,338,278 | 0.28% | |
| 32 | Senior Unsecured Notes $50M | 4/28/23 | 4/28/53 | 2,969,770 | 0.10% | |
| 33 | Senior Unsecured Notes $125M | 4/23/25 | 6/1/32 | 7,286,347 | 0.24% | |
| 34 | Senior Unsecured Notes $175M | 4/23/25 | 6/1/37 | 10,808,225 | 0.36% | |
| 35 | Senior Unsecured Notes $200M | 7/31/25 | 7/31/31 | 11,126,188 | 0.37% | |
| 36 | Senior Unsecured Notes $150M | 7/31/25 | 7/31/36 | 9,121,168 | 0.30% | |
| 37 | Senior Unsecured Notes $115M | 8/19/26 | 8/31/29 | 6,445,418 | 0.21% | |
| 38 | Senior Unsecured Notes $50M | 8/19/26 | 8/31/34 | 2,941,101 | 0.10% | |
| 39 | Senior Unsecured Notes $35M | 8/19/26 | 8/31/38 | 2,156,534 | 0.07% | |
| 40 | Senior Unsecured Notes $400M | 2/15/27 | 2/15/47 | 26,219,932 | 0.87% | |
| 41 | Senior Unsecured Notes $275M (New) | 3/15/28 | 3/15/48 | 14,379,598 | 0.48% | |
| 42 | Senior Unsecured Notes $100M (New) | 5/15/28 | 5/15/48 | 4,134,364 | 0.14% | |
| 43 | | | | | | |
| 44 | Totals | | | 152,533,916 | 5.04% | Interest Requirement and Cost Rate |

| | A |
|---|---|
| 1 | **Public Service Company of New Mexico** |
| 2 | **Schedule G-3** |
| 3 | **Embedded Cost of Borrowed Capital with Term** |
| 4 | **of Maturity in Excess of One Year from Date of Issue** |
| 5 | **Twelve Months Ending 12/31/2028 (Notes)** |
| 6 | **This schedule is sponsored by PNM Witness Agrawal** |
| 7 | |
| 8 | This schedule excludes $310.6 million of debt held at Energy Transition Bond Company I. |
| 9 | Debt authorized in accordance with NMSA 62-6-8 is excluded from the weighted cost of long-term debt calculation. |
| 10 | Provides data to schedules/files (sheets): G-01 Base and Test (G-1 2028). |
| 11 | Please refer to direct testimony of PNM Witness Agrawal for discussion of changes/adjustments. |

| | A | B | C | D | E | F | G | H |
|---|---|---|---|---|---|---|---|---|
| 1 | **Public Service Company of New Mexico** | | | | | | | |
| 2 | **Schedule G-3** | | | | | | | |
| 3 | **Embedded Cost of Borrowed Capital with Term** | | | | | | | |
| 4 | **of Maturity in Excess of One Year from Date of Issue** | | | | | | | |
| 5 | **Twelve Months Ending 12/31/2029** | | | | | | | |
| 6 | **This schedule is sponsored by PNM Witness Agrawal** | | | | | | | |
| 7 | | | | | | | | |
| 8 | **Description** | **Issue Date** | **Maturity Date** | **Bond Term** | **Interest Rate** | **Principal Amount of Issue** | **Price at Offering/Gross Proceeds** | **Annual Interest Expense** |
| 9 | Farmington PCRB $146M | 10/1/21 | 4/1/33 | 12 | 2.150% | 146,000,000 | 146,000,000 | 3,139,000 |
| 10 | Maricopa PCRB $36M | 6/1/24 | 6/1/29 | 5 | 3.875% | 36,000,000 | 36,000,000 | 1,395,000 |
| 11 | Maricopa PCRB $36M (Refi) | 6/1/29 | 6/1/34 | 5 | 4.500% | 36,000,000 | 36,000,000 | 1,620,000 |
| 12 | Farmington PCRB $37M | 6/1/24 | 6/1/29 | 5 | 3.875% | 37,000,000 | 37,000,000 | 1,433,750 |
| 13 | Farmington PCRB $37M (Refi) | 6/1/29 | 6/1/34 | 5 | 4.500% | 37,000,000 | 37,000,000 | 1,665,000 |
| 14 | Farmington PCRB $40.045M | 10/1/26 | 10/1/30 | 4 | 4.125% | 40,045,000 | 40,045,000 | 1,651,856 |
| 15 | Farmington PCRB $130M | 6/1/28 | 6/1/33 | 5 | 4.470% | 130,000,000 | 130,000,000 | 5,811,000 |
| 16 | Farmington PCRB $60M | 6/1/24 | 6/1/29 | 5 | 3.875% | 60,000,000 | 60,000,000 | 2,325,000 |
| 17 | Farmington PCRB $60M (Refi) | 6/1/29 | 6/1/34 | 5 | 4.500% | 60,000,000 | 60,000,000 | 2,700,000 |
| 18 | Farmington PCRB $65M | 6/1/24 | 6/1/29 | 5 | 3.875% | 65,000,000 | 65,000,000 | 2,518,750 |
| 19 | Farmington PCRB $65M (Refi) | 6/1/29 | 6/1/34 | 5 | 4.500% | 65,000,000 | 65,000,000 | 2,925,000 |
| 20 | Maricopa PCRB $39.3M | 10/1/26 | 10/1/30 | 4 | 4.125% | 39,300,000 | 39,300,000 | 1,621,125 |
| 21 | Maricopa PCRB $21M | 10/1/26 | 10/1/30 | 4 | 4.125% | 21,000,000 | 21,000,000 | 866,250 |
| 22 | Senior Unsecured Notes $38M | 5/15/18 | 5/15/33 | 15 | 3.930% | 38,000,000 | 38,000,000 | 1,493,400 |
| 23 | Senior Unsecured Notes $45M | 5/15/18 | 5/15/38 | 20 | 4.220% | 45,000,000 | 45,000,000 | 1,899,000 |
| 24 | Senior Unsecured Notes $20M | 5/15/18 | 5/15/48 | 30 | 4.500% | 20,000,000 | 20,000,000 | 900,000 |
| 25 | Senior Unsecured Notes $85M | 8/1/18 | 8/1/48 | 30 | 4.600% | 85,000,000 | 85,000,000 | 3,910,000 |
| 26 | Senior Unsecured Notes $150M | 4/30/20 | 4/30/30 | 10 | 3.210% | 150,000,000 | 150,000,000 | 4,815,000 |

| | A | B | C | D | E | F | G | H |
|---|---|---|---|---|---|---|---|---|
| 1 | **Public Service Company of New Mexico** | | | | | | | |
| 2 | **Schedule G-3** | | | | | | | |
| 3 | **Embedded Cost of Borrowed Capital with Term** | | | | | | | |
| 4 | **of Maturity in Excess of One Year from Date of Issue** | | | | | | | |
| 5 | **Twelve Months Ending 12/31/2029** | | | | | | | |
| 6 | **This schedule is sponsored by PNM Witness Agrawal** | | | | | | | |
| 7 | | | | | | | | |
| 8 | **Description** | **Issue Date** | **Maturity Date** | **Bond Term** | **Interest Rate** | **Principal Amount of Issue** | **Price at Offering/Gross Proceeds** | **Annual Interest Expense** |
| 27 | Senior Unsecured Notes $50M | 4/30/20 | 4/29/39 | 19 | 3.570% | 50,000,000 | 50,000,000 | 1,785,000 |
| 28 | Senior Unsecured Notes $100M | 12/2/21 | 12/30/41 | 20 | 2.970% | 100,000,000 | 100,000,000 | 2,970,000 |
| 29 | Senior Unsecured Notes $80M | 7/14/21 | 7/15/33 | 12 | 2.590% | 80,000,000 | 80,000,000 | 2,072,000 |
| 30 | Senior Unsecured Notes $80M | 7/14/21 | 7/15/41 | 20 | 3.140% | 80,000,000 | 80,000,000 | 2,512,000 |
| 31 | Senior Unsecured Notes $50M | 12/2/21 | 12/30/31 | 10 | 2.290% | 50,000,000 | 50,000,000 | 1,145,000 |
| 32 | Senior Unsecured Notes $150M | 4/28/23 | 4/28/35 | 12 | 5.510% | 150,000,000 | 150,000,000 | 8,265,000 |
| 33 | Senior Unsecured Notes $50M | 4/28/23 | 4/28/53 | 30 | 5.920% | 50,000,000 | 50,000,000 | 2,960,000 |
| 34 | Senior Unsecured Notes $125M | 4/23/25 | 6/1/32 | 7 | 5.750% | 125,000,000 | 125,000,000 | 7,187,500 |
| 35 | Senior Unsecured Notes $175M | 4/23/25 | 6/1/37 | 12 | 6.130% | 175,000,000 | 175,000,000 | 10,727,500 |
| 36 | Senior Unsecured Notes $200M | 7/31/25 | 7/31/31 | 6 | 5.470% | 200,000,000 | 200,000,000 | 10,940,000 |
| 37 | Senior Unsecured Notes $150M | 7/31/25 | 7/31/36 | 11 | 6.030% | 150,000,000 | 150,000,000 | 9,045,000 |
| 38 | Senior Unsecured Notes $115M | 8/19/26 | 8/31/29 | 3 | 5.440% | 115,000,000 | 115,000,000 | 6,256,000 |
| 39 | Senior Unsecured Notes $50M | 8/19/26 | 8/31/34 | 8 | 5.820% | 50,000,000 | 50,000,000 | 2,910,000 |
| 40 | Senior Unsecured Notes $35M | 8/19/26 | 8/31/38 | 12 | 6.120% | 35,000,000 | 35,000,000 | 2,142,000 |
| 41 | Senior Unsecured Notes $400M | 2/15/27 | 2/15/47 | 20 | 6.530% | 400,000,000 | 400,000,000 | 26,120,000 |
| 42 | Senior Unsecured Notes $275M | 3/15/28 | 3/15/48 | 20 | 6.580% | 275,000,000 | 275,000,000 | 18,095,000 |
| 43 | Senior Unsecured Notes $100M | 5/15/28 | 5/15/48 | 20 | 6.590% | 100,000,000 | 100,000,000 | 6,590,000 |
| 44 | Senior Unsecured Notes $400M (New) | 5/15/29 | 5/15/49 | 20 | 6.630% | 400,000,000 | 400,000,000 | 26,520,000 |
| 45 | Senior Unsecured Notes $200M (New) | 12/15/29 | 12/15/49 | 20 | 6.650% | 200,000,000 | 200,000,000 | 13,300,000 |
| 46 | | | | | | | | |
| 47 | Totals | | | | | 3,895,345,000 | 3,895,345,000 | 204,231,131 |

| | A | B | C | I | J | K | L |
|---|---|---|---|---|---|---|---|
| 1 | **Public Service Company of New Mexico** | | | | | | |
| 2 | **Schedule G-3** | | | | | | |
| 3 | **Embedded Cost of Borrowed Capital with Term** | | | | | | |
| 4 | **of Maturity in Excess of One Year from Date of Issue** | | | | | | |
| 5 | **Twelve Months Ending 12/31/2029** | | | | | | |
| 6 | **This schedule is sponsored by PNM Witness Agrawal** | | | | | | |
| 7 | | | | | | | |
| 8 | **Description** | **Issue Date** | **Maturity Date** | **Premium, Discount & Underwriter Commission** | **Expense of Issue** | **Net Proceeds** | **Weighted Net Proceeds** |
| 9 | Farmington PCRB $146M | 10/1/21 | 4/1/33 | - | 1,017,975 | 144,982,025 | 144,982,025 |
| 10 | Maricopa PCRB $36M | 6/1/24 | 6/1/29 | - | 286,576 | 35,713,424 | 14,880,593 |
| 11 | Maricopa PCRB $36M (Refi) | 6/1/29 | 6/1/34 | - | 180,000 | 35,820,000 | 20,895,000 |
| 12 | Farmington PCRB $37M | 6/1/24 | 6/1/29 | - | 294,536 | 36,705,464 | 15,293,943 |
| 13 | Farmington PCRB $37M (Refi) | 6/1/29 | 6/1/34 | - | 185,000 | 36,815,000 | 21,475,417 |
| 14 | Farmington PCRB $40.045M | 10/1/26 | 10/1/30 | - | 220,248 | 39,824,753 | 39,824,753 |
| 15 | Farmington PCRB $130M | 6/1/28 | 6/1/33 | - | 715,000 | 129,285,000 | 129,285,000 |
| 16 | Farmington PCRB $60M | 6/1/24 | 6/1/29 | - | 477,626 | 59,522,374 | 24,800,989 |
| 17 | Farmington PCRB $60M (Refi) | 6/1/29 | 6/1/34 | - | 300,000 | 59,700,000 | 34,825,000 |
| 18 | Farmington PCRB $65M | 6/1/24 | 6/1/29 | - | 517,428 | 64,482,572 | 26,867,738 |
| 19 | Farmington PCRB $65M (Refi) | 6/1/29 | 6/1/34 | - | 325,000 | 64,675,000 | 37,727,083 |
| 20 | Maricopa PCRB $39.3M | 10/1/26 | 10/1/30 | - | 216,150 | 39,083,850 | 39,083,850 |
| 21 | Maricopa PCRB $21M | 10/1/26 | 10/1/30 | - | 115,500 | 20,884,500 | 20,884,500 |
| 22 | Senior Unsecured Notes $38M | 5/15/18 | 5/15/33 | - | 267,456 | 37,732,544 | 37,732,544 |
| 23 | Senior Unsecured Notes $45M | 5/15/18 | 5/15/38 | - | 316,736 | 44,683,264 | 44,683,264 |
| 24 | Senior Unsecured Notes $20M | 5/15/18 | 5/15/48 | - | 140,772 | 19,859,228 | 19,859,228 |
| 25 | Senior Unsecured Notes $85M | 8/1/18 | 8/1/48 | - | 598,279 | 84,401,721 | 84,401,721 |
| 26 | Senior Unsecured Notes $150M | 4/30/20 | 4/30/30 | - | 1,583,545 | 148,416,455 | 148,416,455 |

| | A | B | C | I | J | K | L |
|---|---|---|---|---|---|---|---|
| 1 | **Public Service Company of New Mexico** | | | | | | |
| 2 | **Schedule G-3** | | | | | | |
| 3 | **Embedded Cost of Borrowed Capital with Term** | | | | | | |
| 4 | **of Maturity in Excess of One Year from Date of Issue** | | | | | | |
| 5 | **Twelve Months Ending 12/31/2029** | | | | | | |
| 6 | **This schedule is sponsored by PNM Witness Agrawal** | | | | | | |
| 7 | | | | | | | |
| 8 | **Description** | **Issue Date** | **Maturity Date** | **Premium, Discount & Underwriter Commission** | **Expense of Issue** | **Net Proceeds** | **Weighted Net Proceeds** |
| 27 | Senior Unsecured Notes $50M | 4/30/20 | 4/29/39 | - | 527,848 | 49,472,152 | 49,472,152 |
| 28 | Senior Unsecured Notes $100M | 12/2/21 | 12/30/41 | - | 586,738 | 99,413,262 | 99,413,262 |
| 29 | Senior Unsecured Notes $80M | 7/14/21 | 7/15/33 | - | 459,480 | 79,540,520 | 79,540,520 |
| 30 | Senior Unsecured Notes $80M | 7/14/21 | 7/15/41 | - | 459,480 | 79,540,520 | 79,540,520 |
| 31 | Senior Unsecured Notes $50M | 12/2/21 | 12/30/31 | - | 293,369 | 49,706,631 | 49,706,631 |
| 32 | Senior Unsecured Notes $150M | 4/28/23 | 4/28/35 | - | 879,333 | 149,120,667 | 149,120,667 |
| 33 | Senior Unsecured Notes $50M | 4/28/23 | 4/28/53 | - | 293,111 | 49,706,889 | 49,706,889 |
| 34 | Senior Unsecured Notes $125M | 4/23/25 | 6/1/32 | - | 691,928 | 124,308,072 | 124,308,072 |
| 35 | Senior Unsecured Notes $175M | 4/23/25 | 6/1/37 | - | 968,699 | 174,031,301 | 174,031,301 |
| 36 | Senior Unsecured Notes $200M | 7/31/25 | 7/31/31 | - | 1,117,127 | 198,882,873 | 198,882,873 |
| 37 | Senior Unsecured Notes $150M | 7/31/25 | 7/31/36 | - | 837,845 | 149,162,155 | 149,162,155 |
| 38 | Senior Unsecured Notes $115M | 8/19/26 | 8/31/29 | - | 575,000 | 114,425,000 | 76,283,333 |
| 39 | Senior Unsecured Notes $50M | 8/19/26 | 8/31/34 | - | 250,000 | 49,750,000 | 49,750,000 |
| 40 | Senior Unsecured Notes $35M | 8/19/26 | 8/31/38 | - | 175,000 | 34,825,000 | 34,825,000 |
| 41 | Senior Unsecured Notes $400M | 2/15/27 | 2/15/47 | - | 2,000,000 | 398,000,000 | 398,000,000 |
| 42 | Senior Unsecured Notes $275M | 3/15/28 | 3/15/48 | - | 1,375,000 | 273,625,000 | 273,625,000 |
| 43 | Senior Unsecured Notes $100M | 5/15/28 | 5/15/48 | - | 500,000 | 99,500,000 | 99,500,000 |
| 44 | Senior Unsecured Notes $400M (New) | 5/15/29 | 5/15/49 | - | 2,000,000 | 398,000,000 | 248,750,000 |
| 45 | Senior Unsecured Notes $200M (New) | 12/15/29 | 12/15/49 | - | 1,000,000 | 199,000,000 | 8,291,667 |
| 46 | | | | | | | |
| 47 | Totals | | | - | 22,747,783 | 3,872,597,217 | 3,297,829,147 |

| | A | B | C | M | N | O | P |
|---|---|---|---|---|---|---|---|
| 1 | **Public Service Company of New Mexico** | | | | | | |
| 2 | **Schedule G-3** | | | | | | |
| 3 | **Embedded Cost of Borrowed Capital with Term** | | | | | | |
| 4 | **of Maturity in Excess of One Year from Date of Issue** | | | | | | |
| 5 | **Twelve Months Ending 12/31/2029** | | | | | | |
| 6 | **This schedule is sponsored by PNM Witness Agrawal** | | | | | | |
| 7 | | | | | | | |
| 8 | **Description** | **Issue Date** | **Maturity Date** | **Net Proceeds Per Unit** | **Effective Yield to Maturity** | **Principal Outstanding** | **Weighted Principal Outstanding** |
| 9 | Farmington PCRB $146M | 10/1/21 | 4/1/33 | 0.99 | 2.22% | 146,000,000 | 146,000,000 |
| 10 | Maricopa PCRB $36M | 6/1/24 | 6/1/29 | 0.99 | 4.05% | 36,000,000 | 15,000,000 |
| 11 | Maricopa PCRB $36M (Refi) | 6/1/29 | 6/1/34 | 1.00 | 4.61% | 36,000,000 | 21,000,000 |
| 12 | Farmington PCRB $37M | 6/1/24 | 6/1/29 | 0.99 | 4.05% | 37,000,000 | 15,416,667 |
| 13 | Farmington PCRB $37M (Refi) | 6/1/29 | 6/1/34 | 1.00 | 4.61% | 37,000,000 | 21,583,333 |
| 14 | Farmington PCRB $40.045M | 10/1/26 | 10/1/30 | 0.99 | 4.28% | 40,045,000 | 40,045,000 |
| 15 | Farmington PCRB $130M | 6/1/28 | 6/1/33 | 0.99 | 4.59% | 130,000,000 | 130,000,000 |
| 16 | Farmington PCRB $60M | 6/1/24 | 6/1/29 | 0.99 | 4.05% | 60,000,000 | 25,000,000 |
| 17 | Farmington PCRB $60M (Refi) | 6/1/29 | 6/1/34 | 1.00 | 4.61% | 60,000,000 | 35,000,000 |
| 18 | Farmington PCRB $65M | 6/1/24 | 6/1/29 | 0.99 | 4.05% | 65,000,000 | 27,083,333 |
| 19 | Farmington PCRB $65M (Refi) | 6/1/29 | 6/1/34 | 1.00 | 4.61% | 65,000,000 | 37,916,667 |
| 20 | Maricopa PCRB $39.3M | 10/1/26 | 10/1/30 | 0.99 | 4.28% | 39,300,000 | 39,300,000 |
| 21 | Maricopa PCRB $21M | 10/1/26 | 10/1/30 | 0.99 | 4.28% | 21,000,000 | 21,000,000 |
| 22 | Senior Unsecured Notes $38M | 5/15/18 | 5/15/33 | 0.99 | 3.99% | 38,000,000 | 38,000,000 |
| 23 | Senior Unsecured Notes $45M | 5/15/18 | 5/15/38 | 0.99 | 4.27% | 45,000,000 | 45,000,000 |
| 24 | Senior Unsecured Notes $20M | 5/15/18 | 5/15/48 | 0.99 | 4.54% | 20,000,000 | 20,000,000 |
| 25 | Senior Unsecured Notes $85M | 8/1/18 | 8/1/48 | 0.99 | 4.64% | 85,000,000 | 85,000,000 |
| 26 | Senior Unsecured Notes $150M | 4/30/20 | 4/30/30 | 0.99 | 3.34% | 150,000,000 | 150,000,000 |

| | A | B | C | M | N | O | P |
|---|---|---|---|---|---|---|---|
| 1 | **Public Service Company of New Mexico** | | | | | | |
| 2 | **Schedule G-3** | | | | | | |
| 3 | **Embedded Cost of Borrowed Capital with Term** | | | | | | |
| 4 | **of Maturity in Excess of One Year from Date of Issue** | | | | | | |
| 5 | **Twelve Months Ending 12/31/2029** | | | | | | |
| 6 | **This schedule is sponsored by PNM Witness Agrawal** | | | | | | |
| 7 | | | | | | | |
| 8 | **Description** | **Issue Date** | **Maturity Date** | **Net Proceeds Per Unit** | **Effective Yield to Maturity** | **Principal Outstanding** | **Weighted Principal Outstanding** |
| 27 | Senior Unsecured Notes $50M | 4/30/20 | 4/29/39 | 0.99 | 3.65% | 50,000,000 | 50,000,000 |
| 28 | Senior Unsecured Notes $100M | 12/2/21 | 12/30/41 | 0.99 | 3.01% | 100,000,000 | 100,000,000 |
| 29 | Senior Unsecured Notes $80M | 7/14/21 | 7/15/33 | 0.99 | 2.65% | 80,000,000 | 80,000,000 |
| 30 | Senior Unsecured Notes $80M | 7/14/21 | 7/15/41 | 0.99 | 3.18% | 80,000,000 | 80,000,000 |
| 31 | Senior Unsecured Notes $50M | 12/2/21 | 12/30/31 | 0.99 | 2.36% | 50,000,000 | 50,000,000 |
| 32 | Senior Unsecured Notes $150M | 4/28/23 | 4/28/35 | 0.99 | 5.58% | 150,000,000 | 150,000,000 |
| 33 | Senior Unsecured Notes $50M | 4/28/23 | 4/28/53 | 0.99 | 5.96% | 50,000,000 | 50,000,000 |
| 34 | Senior Unsecured Notes $125M | 4/23/25 | 6/1/32 | 0.99 | 5.85% | 125,000,000 | 125,000,000 |
| 35 | Senior Unsecured Notes $175M | 4/23/25 | 6/1/37 | 0.99 | 6.20% | 175,000,000 | 175,000,000 |
| 36 | Senior Unsecured Notes $200M | 7/31/25 | 7/31/31 | 0.99 | 5.58% | 200,000,000 | 200,000,000 |
| 37 | Senior Unsecured Notes $150M | 7/31/25 | 7/31/36 | 0.99 | 6.10% | 150,000,000 | 150,000,000 |
| 38 | Senior Unsecured Notes $115M | 8/19/26 | 8/31/29 | 1.00 | 5.62% | 115,000,000 | 76,666,667 |
| 39 | Senior Unsecured Notes $50M | 8/19/26 | 8/31/34 | 1.00 | 5.90% | 50,000,000 | 50,000,000 |
| 40 | Senior Unsecured Notes $35M | 8/19/26 | 8/31/38 | 1.00 | 6.18% | 35,000,000 | 35,000,000 |
| 41 | Senior Unsecured Notes $400M | 2/15/27 | 2/15/47 | 1.00 | 6.58% | 400,000,000 | 400,000,000 |
| 42 | Senior Unsecured Notes $275M | 3/15/28 | 3/15/48 | 1.00 | 6.63% | 275,000,000 | 275,000,000 |
| 43 | Senior Unsecured Notes $100M | 5/15/28 | 5/15/48 | 1.00 | 6.64% | 100,000,000 | 100,000,000 |
| 44 | Senior Unsecured Notes $400M (New) | 5/15/29 | 5/15/49 | 1.00 | 6.68% | 400,000,000 | 250,000,000 |
| 45 | Senior Unsecured Notes $200M (New) | 12/15/29 | 12/15/49 | 1.00 | 6.70% | 200,000,000 | 8,333,333 |
| 46 | | | | | | | |
| 47 | Totals | | | | | 3,895,345,000 | 3,317,345,000 |

| | A | B | C | Q | R | S |
|---|---|---|---|---|---|---|
| 1 | **Public Service Company of New Mexico** | | | | | |
| 2 | **Schedule G-3** | | | | | |
| 3 | **Embedded Cost of Borrowed Capital with Term** | | | | | |
| 4 | **of Maturity in Excess of One Year from Date of Issue** | | | | | |
| 5 | **Twelve Months Ending 12/31/2029** | | | | | |
| 6 | **This schedule is sponsored by PNM Witness Agrawal** | | | | | |
| 7 | | | | | | |
| 8 | **Description** | **Issue Date** | **Maturity Date** | **Interest Requirements** | **Weighted Effective Cost Rate** | **Reference** |
| 9 | Farmington PCRB $146M | 10/1/21 | 4/1/33 | 3,223,831 | 0.10% | |
| 10 | Maricopa PCRB $36M | 6/1/24 | 6/1/29 | 605,131 | 0.02% | |
| 11 | Maricopa PCRB $36M (Refi) | 6/1/29 | 6/1/34 | 966,000 | 0.03% | |
| 12 | Farmington PCRB $37M | 6/1/24 | 6/1/29 | 621,941 | 0.02% | |
| 13 | Farmington PCRB $37M (Refi) | 6/1/29 | 6/1/34 | 992,833 | 0.03% | |
| 14 | Farmington PCRB $40.045M | 10/1/26 | 10/1/30 | 1,706,918 | 0.05% | |
| 15 | Farmington PCRB $130M | 6/1/28 | 6/1/33 | 5,954,000 | 0.18% | |
| 16 | Farmington PCRB $60M | 6/1/24 | 6/1/29 | 1,008,552 | 0.03% | |
| 17 | Farmington PCRB $60M (Refi) | 6/1/29 | 6/1/34 | 1,610,000 | 0.05% | |
| 18 | Farmington PCRB $65M | 6/1/24 | 6/1/29 | 1,092,598 | 0.03% | |
| 19 | Farmington PCRB $65M (Refi) | 6/1/29 | 6/1/34 | 1,744,167 | 0.05% | |
| 20 | Maricopa PCRB $39.3M | 10/1/26 | 10/1/30 | 1,675,163 | 0.05% | |
| 21 | Maricopa PCRB $21M | 10/1/26 | 10/1/30 | 895,125 | 0.03% | |
| 22 | Senior Unsecured Notes $38M | 5/15/18 | 5/15/33 | 1,511,230 | 0.05% | |
| 23 | Senior Unsecured Notes $45M | 5/15/18 | 5/15/38 | 1,914,837 | 0.06% | |
| 24 | Senior Unsecured Notes $20M | 5/15/18 | 5/15/48 | 904,692 | 0.03% | |
| 25 | Senior Unsecured Notes $85M | 8/1/18 | 8/1/48 | 3,929,943 | 0.12% | |
| 26 | Senior Unsecured Notes $150M | 4/30/20 | 4/30/30 | 4,973,355 | 0.15% | |

| | A | B | C | Q | R | S |
|---|---|---|---|---|---|---|
| 1 | **Public Service Company of New Mexico** | | | | | |
| 2 | **Schedule G-3** | | | | | |
| 3 | **Embedded Cost of Borrowed Capital with Term** | | | | | |
| 4 | **of Maturity in Excess of One Year from Date of Issue** | | | | | |
| 5 | **Twelve Months Ending 12/31/2029** | | | | | |
| 6 | **This schedule is sponsored by PNM Witness Agrawal** | | | | | |
| 7 | | | | | | |
| 8 | **Description** | **Issue Date** | **Maturity Date** | **Interest Requirements** | **Weighted Effective Cost Rate** | **Reference** |
| 27 | Senior Unsecured Notes $50M | 4/30/20 | 4/29/39 | 1,812,781 | 0.05% | |
| 28 | Senior Unsecured Notes $100M | 12/2/21 | 12/30/41 | 2,999,337 | 0.09% | |
| 29 | Senior Unsecured Notes $80M | 7/14/21 | 7/15/33 | 2,110,290 | 0.06% | |
| 30 | Senior Unsecured Notes $80M | 7/14/21 | 7/15/41 | 2,534,974 | 0.08% | |
| 31 | Senior Unsecured Notes $50M | 12/2/21 | 12/30/31 | 1,174,337 | 0.04% | |
| 32 | Senior Unsecured Notes $150M | 4/28/23 | 4/28/35 | 8,338,278 | 0.25% | |
| 33 | Senior Unsecured Notes $50M | 4/28/23 | 4/28/53 | 2,969,770 | 0.09% | |
| 34 | Senior Unsecured Notes $125M | 4/23/25 | 6/1/32 | 7,286,347 | 0.22% | |
| 35 | Senior Unsecured Notes $175M | 4/23/25 | 6/1/37 | 10,808,225 | 0.33% | |
| 36 | Senior Unsecured Notes $200M | 7/31/25 | 7/31/31 | 11,126,188 | 0.34% | |
| 37 | Senior Unsecured Notes $150M | 7/31/25 | 7/31/36 | 9,121,168 | 0.28% | |
| 38 | Senior Unsecured Notes $115M | 8/19/26 | 8/31/29 | 4,296,945 | 0.13% | |
| 39 | Senior Unsecured Notes $50M | 8/19/26 | 8/31/34 | 2,941,101 | 0.09% | |
| 40 | Senior Unsecured Notes $35M | 8/19/26 | 8/31/38 | 2,156,534 | 0.07% | |
| 41 | Senior Unsecured Notes $400M | 2/15/27 | 2/15/47 | 26,219,932 | 0.80% | |
| 42 | Senior Unsecured Notes $275M | 3/15/28 | 3/15/48 | 18,163,703 | 0.55% | |
| 43 | Senior Unsecured Notes $100M | 5/15/28 | 5/15/48 | 6,614,983 | 0.20% | |
| 44 | Senior Unsecured Notes $400M (New) | 5/15/29 | 5/15/49 | 16,637,457 | 0.50% | |
| 45 | Senior Unsecured Notes $200M (New) | 12/15/29 | 12/15/49 | 556,249 | 0.02% | |
| 46 | | | | | | |
| 47 | Totals | | | 173,198,913 | 5.25% | Interest Requirement and Cost Rate |

| | A |
|---|---|
| 1 | **Public Service Company of New Mexico** |
| 2 | **Schedule G-3** |
| 3 | **Embedded Cost of Borrowed Capital with Term** |
| 4 | **of Maturity in Excess of One Year from Date of Issue** |
| 5 | **Twelve Months Ending 12/31/2029 (Notes)** |
| 6 | **This schedule is sponsored by PNM Witness Agrawal** |
| 7 | |
| 8 | This schedule excludes $301.9 million of debt held at Energy Transition Bond Company I. |
| 9 | Debt authorized in accordance with NMSA 62-6-8 is excluded from the weighted cost of long-term debt calculation. |
| 10 | Provides data to schedules/files (sheets): G-01 Base and Test (G-1 2029). |
| 11 | Please refer to direct testimony of PNM Witness Agrawal for discussion of changes/adjustments. |

| | A | B | C | D | E | F | G | H |
|---|---|---|---|---|---|---|---|---|
| 1 | **Public Service Company of New Mexico** | | | | | | | |
| 2 | **Schedule G-3** | | | | | | | |
| 3 | **Embedded Cost of Borrowed Capital with Term** | | | | | | | |
| 4 | **of Maturity in Excess of One Year from Date of Issue** | | | | | | | |
| 5 | **Twelve Months Ending 12/31/2030** | | | | | | | |
| 6 | **This schedule is sponsored by PNM Witness Agrawal** | | | | | | | |
| 7 | | | | | | | | |
| 8 | **Description** | **Issue Date** | **Maturity Date** | **Bond Term** | **Interest Rate** | **Principal Amount of Issue** | **Price at Offering/Gross Proceeds** | **Annual Interest Expense** |
| 9 | Farmington PCRB $146M | 10/1/21 | 4/1/33 | 12 | 2.150% | 146,000,000 | 146,000,000 | 3,139,000 |
| 10 | Maricopa PCRB $36M | 6/1/29 | 6/1/34 | 5 | 4.500% | 36,000,000 | 36,000,000 | 1,620,000 |
| 11 | Farmington PCRB $37M | 6/1/29 | 6/1/34 | 5 | 4.500% | 37,000,000 | 37,000,000 | 1,665,000 |
| 12 | Farmington PCRB $40.045M | 10/1/26 | 10/1/30 | 4 | 4.125% | 40,045,000 | 40,045,000 | 1,651,856 |
| 13 | Farmington PCRB $40.045M (Refi) | 10/1/30 | 10/1/35 | 5 | 4.520% | 40,045,000 | 40,045,000 | 1,810,034 |
| 14 | Farmington PCRB $130M | 6/1/28 | 6/1/33 | 5 | 4.470% | 130,000,000 | 130,000,000 | 5,811,000 |
| 15 | Farmington PCRB $60M | 6/1/29 | 6/1/34 | 5 | 4.500% | 60,000,000 | 60,000,000 | 2,700,000 |
| 16 | Farmington PCRB $65M | 6/1/29 | 6/1/34 | 5 | 4.500% | 65,000,000 | 65,000,000 | 2,925,000 |
| 17 | Maricopa PCRB $39.3M | 10/1/26 | 10/1/30 | 4 | 4.125% | 39,300,000 | 39,300,000 | 1,621,125 |
| 18 | Maricopa PCRB $39.3M (Refi) | 10/1/30 | 10/1/35 | 5 | 4.520% | 39,300,000 | 39,300,000 | 1,776,360 |
| 19 | Maricopa PCRB $21M | 10/1/26 | 10/1/30 | 4 | 4.125% | 21,000,000 | 21,000,000 | 866,250 |
| 20 | Maricopa PCRB $21M (Refi) | 10/1/30 | 10/1/35 | 5 | 4.520% | 21,000,000 | 21,000,000 | 949,200 |
| 21 | Senior Unsecured Notes $38M | 5/15/18 | 5/15/33 | 15 | 3.930% | 38,000,000 | 38,000,000 | 1,493,400 |
| 22 | Senior Unsecured Notes $45M | 5/15/18 | 5/15/38 | 20 | 4.220% | 45,000,000 | 45,000,000 | 1,899,000 |
| 23 | Senior Unsecured Notes $20M | 5/15/18 | 5/15/48 | 30 | 4.500% | 20,000,000 | 20,000,000 | 900,000 |
| 24 | Senior Unsecured Notes $85M | 8/1/18 | 8/1/48 | 30 | 4.600% | 85,000,000 | 85,000,000 | 3,910,000 |
| 25 | Senior Unsecured Notes $150M | 4/30/20 | 4/30/30 | 10 | 3.210% | 150,000,000 | 150,000,000 | 4,815,000 |
| 26 | Senior Unsecured Notes $50M | 4/30/20 | 4/29/39 | 19 | 3.570% | 50,000,000 | 50,000,000 | 1,785,000 |

| | A | B | C | D | E | F | G | H |
|---|---|---|---|---|---|---|---|---|
| 1 | **Public Service Company of New Mexico** | | | | | | | |
| 2 | **Schedule G-3** | | | | | | | |
| 3 | **Embedded Cost of Borrowed Capital with Term** | | | | | | | |
| 4 | **of Maturity in Excess of One Year from Date of Issue** | | | | | | | |
| 5 | **Twelve Months Ending 12/31/2030** | | | | | | | |
| 6 | **This schedule is sponsored by PNM Witness Agrawal** | | | | | | | |
| 7 | | | | | | | | |
| 8 | **Description** | **Issue Date** | **Maturity Date** | **Bond Term** | **Interest Rate** | **Principal Amount of Issue** | **Price at Offering/Gross Proceeds** | **Annual Interest Expense** |
| 27 | Senior Unsecured Notes $100M | 12/2/21 | 12/30/41 | 20 | 2.970% | 100,000,000 | 100,000,000 | 2,970,000 |
| 28 | Senior Unsecured Notes $80M | 7/14/21 | 7/15/33 | 12 | 2.590% | 80,000,000 | 80,000,000 | 2,072,000 |
| 29 | Senior Unsecured Notes $80M | 7/14/21 | 7/15/41 | 20 | 3.140% | 80,000,000 | 80,000,000 | 2,512,000 |
| 30 | Senior Unsecured Notes $50M | 12/2/21 | 12/30/31 | 10 | 2.290% | 50,000,000 | 50,000,000 | 1,145,000 |
| 31 | Senior Unsecured Notes $150M | 4/28/23 | 4/28/35 | 12 | 5.510% | 150,000,000 | 150,000,000 | 8,265,000 |
| 32 | Senior Unsecured Notes $50M | 4/28/23 | 4/28/53 | 30 | 5.920% | 50,000,000 | 50,000,000 | 2,960,000 |
| 33 | Senior Unsecured Notes $125M | 4/23/25 | 6/1/32 | 7 | 5.750% | 125,000,000 | 125,000,000 | 7,187,500 |
| 34 | Senior Unsecured Notes $175M | 4/23/25 | 6/1/37 | 12 | 6.130% | 175,000,000 | 175,000,000 | 10,727,500 |
| 35 | Senior Unsecured Notes $200M | 7/31/25 | 7/31/31 | 6 | 5.470% | 200,000,000 | 200,000,000 | 10,940,000 |
| 36 | Senior Unsecured Notes $150M | 7/31/25 | 7/31/36 | 11 | 6.030% | 150,000,000 | 150,000,000 | 9,045,000 |
| 37 | Senior Unsecured Notes $50M | 8/19/26 | 8/31/34 | 8 | 5.820% | 50,000,000 | 50,000,000 | 2,910,000 |
| 38 | Senior Unsecured Notes $35M | 8/19/26 | 8/31/38 | 12 | 6.120% | 35,000,000 | 35,000,000 | 2,142,000 |
| 39 | Senior Unsecured Notes $400M | 2/15/27 | 2/15/47 | 20 | 6.530% | 400,000,000 | 400,000,000 | 26,120,000 |
| 40 | Senior Unsecured Notes $275M | 3/15/28 | 3/15/48 | 20 | 6.580% | 275,000,000 | 275,000,000 | 18,095,000 |
| 41 | Senior Unsecured Notes $100M | 5/15/28 | 5/15/48 | 20 | 6.590% | 100,000,000 | 100,000,000 | 6,590,000 |
| 42 | Senior Unsecured Notes $400M | 5/15/29 | 5/15/49 | 20 | 6.630% | 400,000,000 | 400,000,000 | 26,520,000 |
| 43 | Senior Unsecured Notes $200M | 12/15/29 | 12/15/49 | 20 | 6.650% | 200,000,000 | 200,000,000 | 13,300,000 |
| 44 | | | | | | | | |
| 45 | Totals | | | | | 3,682,690,000 | 3,682,690,000 | 194,838,225 |

| | A | B | C | I | J | K | L |
|---|---|---|---|---|---|---|---|
| 1 | **Public Service Company of New Mexico** | | | | | | |
| 2 | **Schedule G-3** | | | | | | |
| 3 | **Embedded Cost of Borrowed Capital with Term** | | | | | | |
| 4 | **of Maturity in Excess of One Year from Date of Issue** | | | | | | |
| 5 | **Twelve Months Ending 12/31/2030** | | | | | | |
| 6 | **This schedule is sponsored by PNM Witness Agrawal** | | | | | | |
| 7 | | | | | | | |
| 8 | **Description** | **Issue Date** | **Maturity Date** | **Premium, Discount & Underwriter Commission** | **Expense of Issue** | **Net Proceeds** | **Weighted Net Proceeds** |
| 9 | Farmington PCRB $146M | 10/1/21 | 4/1/33 | - | 1,017,975 | 144,982,025 | 144,982,025 |
| 10 | Maricopa PCRB $36M | 6/1/29 | 6/1/34 | - | 180,000 | 35,820,000 | 20,895,000 |
| 11 | Farmington PCRB $37M | 6/1/29 | 6/1/34 | - | 185,000 | 36,815,000 | 21,475,417 |
| 12 | Farmington PCRB $40.045M | 10/1/26 | 10/1/30 | - | 220,248 | 39,824,753 | 33,187,294 |
| 13 | Farmington PCRB $40.045M (Refi) | 10/1/30 | 10/1/35 | - | 220,248 | 39,824,753 | 6,637,459 |
| 14 | Farmington PCRB $130M | 6/1/28 | 6/1/33 | - | 715,000 | 129,285,000 | 129,285,000 |
| 15 | Farmington PCRB $60M | 6/1/29 | 6/1/34 | - | 300,000 | 59,700,000 | 34,825,000 |
| 16 | Farmington PCRB $65M | 6/1/29 | 6/1/34 | - | 325,000 | 64,675,000 | 37,727,083 |
| 17 | Maricopa PCRB $39.3M | 10/1/26 | 10/1/30 | - | 216,150 | 39,083,850 | 32,569,875 |
| 18 | Maricopa PCRB $39.3M (Refi) | 10/1/30 | 10/1/35 | - | 216,150 | 39,083,850 | 6,513,975 |
| 19 | Maricopa PCRB $21M | 10/1/26 | 10/1/30 | - | 115,500 | 20,884,500 | 17,403,750 |
| 20 | Maricopa PCRB $21M (Refi) | 10/1/30 | 10/1/35 | - | 115,500 | 20,884,500 | 3,480,750 |
| 21 | Senior Unsecured Notes $38M | 5/15/18 | 5/15/33 | - | 267,456 | 37,732,544 | 37,732,544 |
| 22 | Senior Unsecured Notes $45M | 5/15/18 | 5/15/38 | - | 316,736 | 44,683,264 | 44,683,264 |
| 23 | Senior Unsecured Notes $20M | 5/15/18 | 5/15/48 | - | 140,772 | 19,859,228 | 19,859,228 |
| 24 | Senior Unsecured Notes $85M | 8/1/18 | 8/1/48 | - | 598,279 | 84,401,721 | 84,401,721 |
| 25 | Senior Unsecured Notes $150M | 4/30/20 | 4/30/30 | - | 1,583,545 | 148,416,455 | 148,416,455 |
| 26 | Senior Unsecured Notes $50M | 4/30/20 | 4/29/39 | - | 527,848 | 49,472,152 | 49,472,152 |

| | A | B | C | I | J | K | L |
|---|---|---|---|---|---|---|---|
| 1 | **Public Service Company of New Mexico** | | | | | | |
| 2 | **Schedule G-3** | | | | | | |
| 3 | **Embedded Cost of Borrowed Capital with Term** | | | | | | |
| 4 | **of Maturity in Excess of One Year from Date of Issue** | | | | | | |
| 5 | **Twelve Months Ending 12/31/2030** | | | | | | |
| 6 | **This schedule is sponsored by PNM Witness Agrawal** | | | | | | |
| 7 | | | | | | | |
| 8 | **Description** | **Issue Date** | **Maturity Date** | **Premium, Discount & Underwriter Commission** | **Expense of Issue** | **Net Proceeds** | **Weighted Net Proceeds** |
| 27 | Senior Unsecured Notes $100M | 12/2/21 | 12/30/41 | - | 586,738 | 99,413,262 | 99,413,262 |
| 28 | Senior Unsecured Notes $80M | 7/14/21 | 7/15/33 | - | 459,480 | 79,540,520 | 79,540,520 |
| 29 | Senior Unsecured Notes $80M | 7/14/21 | 7/15/41 | - | 459,480 | 79,540,520 | 79,540,520 |
| 30 | Senior Unsecured Notes $50M | 12/2/21 | 12/30/31 | - | 293,369 | 49,706,631 | 49,706,631 |
| 31 | Senior Unsecured Notes $150M | 4/28/23 | 4/28/35 | - | 879,333 | 149,120,667 | 149,120,667 |
| 32 | Senior Unsecured Notes $50M | 4/28/23 | 4/28/53 | - | 293,111 | 49,706,889 | 49,706,889 |
| 33 | Senior Unsecured Notes $125M | 4/23/25 | 6/1/32 | - | 691,928 | 124,308,072 | 124,308,072 |
| 34 | Senior Unsecured Notes $175M | 4/23/25 | 6/1/37 | - | 968,699 | 174,031,301 | 174,031,301 |
| 35 | Senior Unsecured Notes $200M | 7/31/25 | 7/31/31 | - | 1,117,127 | 198,882,873 | 198,882,873 |
| 36 | Senior Unsecured Notes $150M | 7/31/25 | 7/31/36 | - | 837,845 | 149,162,155 | 149,162,155 |
| 37 | Senior Unsecured Notes $50M | 8/19/26 | 8/31/34 | - | 250,000 | 49,750,000 | 49,750,000 |
| 38 | Senior Unsecured Notes $35M | 8/19/26 | 8/31/38 | - | 175,000 | 34,825,000 | 34,825,000 |
| 39 | Senior Unsecured Notes $400M | 2/15/27 | 2/15/47 | - | 2,000,000 | 398,000,000 | 398,000,000 |
| 40 | Senior Unsecured Notes $275M | 3/15/28 | 3/15/48 | - | 1,375,000 | 273,625,000 | 273,625,000 |
| 41 | Senior Unsecured Notes $100M | 5/15/28 | 5/15/48 | - | 500,000 | 99,500,000 | 99,500,000 |
| 42 | Senior Unsecured Notes $400M | 5/15/29 | 5/15/49 | - | 2,000,000 | 398,000,000 | 398,000,000 |
| 43 | Senior Unsecured Notes $200M | 12/15/29 | 12/15/49 | - | 1,000,000 | 199,000,000 | 199,000,000 |
| 44 | | | | | | | |
| 45 | Totals | | | - | 21,148,514 | 3,661,541,486 | 3,479,660,883 |

| | A | B | C | M | N | O | P |
|---|---|---|---|---|---|---|---|
| 1 | **Public Service Company of New Mexico** | | | | | | |
| 2 | **Schedule G-3** | | | | | | |
| 3 | **Embedded Cost of Borrowed Capital with Term** | | | | | | |
| 4 | **of Maturity in Excess of One Year from Date of Issue** | | | | | | |
| 5 | **Twelve Months Ending 12/31/2030** | | | | | | |
| 6 | **This schedule is sponsored by PNM Witness Agrawal** | | | | | | |
| 7 | | | | | | | |
| 8 | **Description** | **Issue Date** | **Maturity Date** | **Net Proceeds Per Unit** | **Effective Yield to Maturity** | **Principal Outstanding** | **Weighted Principal Outstanding** |
| 9 | Farmington PCRB $146M | 10/1/21 | 4/1/33 | 0.99 | 2.22% | 146,000,000 | 146,000,000 |
| 10 | Maricopa PCRB $36M | 6/1/29 | 6/1/34 | 1.00 | 4.61% | 36,000,000 | 21,000,000 |
| 11 | Farmington PCRB $37M | 6/1/29 | 6/1/34 | 1.00 | 4.61% | 37,000,000 | 21,583,333 |
| 12 | Farmington PCRB $40.045M | 10/1/26 | 10/1/30 | 0.99 | 4.28% | 40,045,000 | 33,370,833 |
| 13 | Farmington PCRB $40.045M (Refi) | 10/1/30 | 10/1/35 | 0.99 | 4.64% | 40,045,000 | 6,674,167 |
| 14 | Farmington PCRB $130M | 6/1/28 | 6/1/33 | 0.99 | 4.59% | 130,000,000 | 130,000,000 |
| 15 | Farmington PCRB $60M | 6/1/29 | 6/1/34 | 1.00 | 4.61% | 60,000,000 | 35,000,000 |
| 16 | Farmington PCRB $65M | 6/1/29 | 6/1/34 | 1.00 | 4.61% | 65,000,000 | 37,916,667 |
| 17 | Maricopa PCRB $39.3M | 10/1/26 | 10/1/30 | 0.99 | 4.28% | 39,300,000 | 32,750,000 |
| 18 | Maricopa PCRB $39.3M (Refi) | 10/1/30 | 10/1/35 | 0.99 | 4.64% | 39,300,000 | 6,550,000 |
| 19 | Maricopa PCRB $21M | 10/1/26 | 10/1/30 | 0.99 | 4.28% | 21,000,000 | 17,500,000 |
| 20 | Maricopa PCRB $21M (Refi) | 10/1/30 | 10/1/35 | 0.99 | 4.64% | 21,000,000 | 3,500,000 |
| 21 | Senior Unsecured Notes $38M | 5/15/18 | 5/15/33 | 0.99 | 3.99% | 38,000,000 | 38,000,000 |
| 22 | Senior Unsecured Notes $45M | 5/15/18 | 5/15/38 | 0.99 | 4.27% | 45,000,000 | 45,000,000 |
| 23 | Senior Unsecured Notes $20M | 5/15/18 | 5/15/48 | 0.99 | 4.54% | 20,000,000 | 20,000,000 |
| 24 | Senior Unsecured Notes $85M | 8/1/18 | 8/1/48 | 0.99 | 4.64% | 85,000,000 | 85,000,000 |
| 25 | Senior Unsecured Notes $150M | 4/30/20 | 4/30/30 | 0.99 | 3.34% | 150,000,000 | 150,000,000 |
| 26 | Senior Unsecured Notes $50M | 4/30/20 | 4/29/39 | 0.99 | 3.65% | 50,000,000 | 50,000,000 |

| | A | B | C | M | N | O | P |
|---|---|---|---|---|---|---|---|
| 1 | **Public Service Company of New Mexico** | | | | | | |
| 2 | **Schedule G-3** | | | | | | |
| 3 | **Embedded Cost of Borrowed Capital with Term** | | | | | | |
| 4 | **of Maturity in Excess of One Year from Date of Issue** | | | | | | |
| 5 | **Twelve Months Ending 12/31/2030** | | | | | | |
| 6 | **This schedule is sponsored by PNM Witness Agrawal** | | | | | | |
| 7 | | | | | | | |
| 8 | **Description** | **Issue Date** | **Maturity Date** | **Net Proceeds Per Unit** | **Effective Yield to Maturity** | **Principal Outstanding** | **Weighted Principal Outstanding** |
| 27 | Senior Unsecured Notes $100M | 12/2/21 | 12/30/41 | 0.99 | 3.01% | 100,000,000 | 100,000,000 |
| 28 | Senior Unsecured Notes $80M | 7/14/21 | 7/15/33 | 0.99 | 2.65% | 80,000,000 | 80,000,000 |
| 29 | Senior Unsecured Notes $80M | 7/14/21 | 7/15/41 | 0.99 | 3.18% | 80,000,000 | 80,000,000 |
| 30 | Senior Unsecured Notes $50M | 12/2/21 | 12/30/31 | 0.99 | 2.36% | 50,000,000 | 50,000,000 |
| 31 | Senior Unsecured Notes $150M | 4/28/23 | 4/28/35 | 0.99 | 5.58% | 150,000,000 | 150,000,000 |
| 32 | Senior Unsecured Notes $50M | 4/28/23 | 4/28/53 | 0.99 | 5.96% | 50,000,000 | 50,000,000 |
| 33 | Senior Unsecured Notes $125M | 4/23/25 | 6/1/32 | 0.99 | 5.85% | 125,000,000 | 125,000,000 |
| 34 | Senior Unsecured Notes $175M | 4/23/25 | 6/1/37 | 0.99 | 6.20% | 175,000,000 | 175,000,000 |
| 35 | Senior Unsecured Notes $200M | 7/31/25 | 7/31/31 | 0.99 | 5.58% | 200,000,000 | 200,000,000 |
| 36 | Senior Unsecured Notes $150M | 7/31/25 | 7/31/36 | 0.99 | 6.10% | 150,000,000 | 150,000,000 |
| 37 | Senior Unsecured Notes $50M | 8/19/26 | 8/31/34 | 1.00 | 5.90% | 50,000,000 | 50,000,000 |
| 38 | Senior Unsecured Notes $35M | 8/19/26 | 8/31/38 | 1.00 | 6.18% | 35,000,000 | 35,000,000 |
| 39 | Senior Unsecured Notes $400M | 2/15/27 | 2/15/47 | 1.00 | 6.58% | 400,000,000 | 400,000,000 |
| 40 | Senior Unsecured Notes $275M | 3/15/28 | 3/15/48 | 1.00 | 6.63% | 275,000,000 | 275,000,000 |
| 41 | Senior Unsecured Notes $100M | 5/15/28 | 5/15/48 | 1.00 | 6.64% | 100,000,000 | 100,000,000 |
| 42 | Senior Unsecured Notes $400M | 5/15/29 | 5/15/49 | 1.00 | 6.68% | 400,000,000 | 400,000,000 |
| 43 | Senior Unsecured Notes $200M | 12/15/29 | 12/15/49 | 1.00 | 6.70% | 200,000,000 | 200,000,000 |
| 44 | | | | | | | |
| 45 | Totals | | | | | 3,682,690,000 | 3,499,845,000 |

| | A | B | C | Q | R | S |
|---|---|---|---|---|---|---|
| 1 | **Public Service Company of New Mexico** | | | | | |
| 2 | **Schedule G-3** | | | | | |
| 3 | **Embedded Cost of Borrowed Capital with Term** | | | | | |
| 4 | **of Maturity in Excess of One Year from Date of Issue** | | | | | |
| 5 | **Twelve Months Ending 12/31/2030** | | | | | |
| 6 | **This schedule is sponsored by PNM Witness Agrawal** | | | | | |
| 7 | | | | | | |
| 8 | **Description** | **Issue Date** | **Maturity Date** | **Interest Requirements** | **Weighted Effective Cost Rate** | **Reference** |
| 9 | Farmington PCRB $146M | 10/1/21 | 4/1/33 | 3,223,831 | 0.09% | |
| 10 | Maricopa PCRB $36M | 6/1/29 | 6/1/34 | 1,656,000 | 0.05% | |
| 11 | Farmington PCRB $37M | 6/1/29 | 6/1/34 | 1,702,000 | 0.05% | |
| 12 | Farmington PCRB $40.045M | 10/1/26 | 10/1/30 | 1,422,432 | 0.04% | |
| 13 | Farmington PCRB $40.045M (Refi) | 10/1/30 | 10/1/35 | 309,014 | 0.01% | |
| 14 | Farmington PCRB $130M | 6/1/28 | 6/1/33 | 5,954,000 | 0.17% | |
| 15 | Farmington PCRB $60M | 6/1/29 | 6/1/34 | 2,760,000 | 0.08% | |
| 16 | Farmington PCRB $65M | 6/1/29 | 6/1/34 | 2,990,000 | 0.09% | |
| 17 | Maricopa PCRB $39.3M | 10/1/26 | 10/1/30 | 1,395,969 | 0.04% | |
| 18 | Maricopa PCRB $39.3M (Refi) | 10/1/30 | 10/1/35 | 303,265 | 0.01% | |
| 19 | Maricopa PCRB $21M | 10/1/26 | 10/1/30 | 745,938 | 0.02% | |
| 20 | Maricopa PCRB $21M (Refi) | 10/1/30 | 10/1/35 | 162,050 | 0.00% | |
| 21 | Senior Unsecured Notes $38M | 5/15/18 | 5/15/33 | 1,511,230 | 0.04% | |
| 22 | Senior Unsecured Notes $45M | 5/15/18 | 5/15/38 | 1,914,837 | 0.06% | |
| 23 | Senior Unsecured Notes $20M | 5/15/18 | 5/15/48 | 904,692 | 0.03% | |
| 24 | Senior Unsecured Notes $85M | 8/1/18 | 8/1/48 | 3,929,943 | 0.11% | |
| 25 | Senior Unsecured Notes $150M | 4/30/20 | 4/30/30 | 4,973,355 | 0.14% | |
| 26 | Senior Unsecured Notes $50M | 4/30/20 | 4/29/39 | 1,812,781 | 0.05% | |

| | A | B | C | Q | R | S |
|---|---|---|---|---|---|---|
| 1 | **Public Service Company of New Mexico** | | | | | |
| 2 | **Schedule G-3** | | | | | |
| 3 | **Embedded Cost of Borrowed Capital with Term** | | | | | |
| 4 | **of Maturity in Excess of One Year from Date of Issue** | | | | | |
| 5 | **Twelve Months Ending 12/31/2030** | | | | | |
| 6 | **This schedule is sponsored by PNM Witness Agrawal** | | | | | |
| 7 | | | | | | |
| 8 | **Description** | **Issue Date** | **Maturity Date** | **Interest Requirements** | **Weighted Effective Cost Rate** | **Reference** |
| 27 | Senior Unsecured Notes $100M | 12/2/21 | 12/30/41 | 2,999,337 | 0.09% | |
| 28 | Senior Unsecured Notes $80M | 7/14/21 | 7/15/33 | 2,110,290 | 0.06% | |
| 29 | Senior Unsecured Notes $80M | 7/14/21 | 7/15/41 | 2,534,974 | 0.07% | |
| 30 | Senior Unsecured Notes $50M | 12/2/21 | 12/30/31 | 1,174,337 | 0.03% | |
| 31 | Senior Unsecured Notes $150M | 4/28/23 | 4/28/35 | 8,338,278 | 0.24% | |
| 32 | Senior Unsecured Notes $50M | 4/28/23 | 4/28/53 | 2,969,770 | 0.09% | |
| 33 | Senior Unsecured Notes $125M | 4/23/25 | 6/1/32 | 7,286,347 | 0.21% | |
| 34 | Senior Unsecured Notes $175M | 4/23/25 | 6/1/37 | 10,808,225 | 0.31% | |
| 35 | Senior Unsecured Notes $200M | 7/31/25 | 7/31/31 | 11,126,188 | 0.32% | |
| 36 | Senior Unsecured Notes $150M | 7/31/25 | 7/31/36 | 9,121,168 | 0.26% | |
| 37 | Senior Unsecured Notes $50M | 8/19/26 | 8/31/34 | 2,941,101 | 0.08% | |
| 38 | Senior Unsecured Notes $35M | 8/19/26 | 8/31/38 | 2,156,534 | 0.06% | |
| 39 | Senior Unsecured Notes $400M | 2/15/27 | 2/15/47 | 26,219,932 | 0.75% | |
| 40 | Senior Unsecured Notes $275M | 3/15/28 | 3/15/48 | 18,163,703 | 0.52% | |
| 41 | Senior Unsecured Notes $100M | 5/15/28 | 5/15/48 | 6,614,983 | 0.19% | |
| 42 | Senior Unsecured Notes $400M | 5/15/29 | 5/15/49 | 26,619,932 | 0.77% | |
| 43 | Senior Unsecured Notes $200M | 12/15/29 | 12/15/49 | 13,349,966 | 0.38% | |
| 44 | | | | | | |
| 45 | Totals | | | 192,206,399 | 5.52% | Interest Requirement and Cost Rate |

| | A |
|---|---|
| 1 | **Public Service Company of New Mexico** |
| 2 | **Schedule G-3** |
| 3 | **Embedded Cost of Borrowed Capital with Term** |
| 4 | **of Maturity in Excess of One Year from Date of Issue** |
| 5 | **Twelve Months Ending 12/31/2030 (Notes)** |
| 6 | **This schedule is sponsored by PNM Witness Agrawal** |
| 7 | |
| 8 | This schedule excludes $292.8 million of debt held at Energy Transition Bond Company I. |
| 9 | Debt authorized in accordance with NMSA 62-6-8 is excluded from the weighted cost of long-term debt calculation. |
| 10 | Provides data to schedules/files (sheets): G-01 Base and Test (G-1 2030). |
| 11 | Please refer to direct testimony of PNM Witness Agrawal for discussion of changes/adjustments. |

# PNM Schedule G-4

Cost of short-term borrowed capital including revolving credit agreements and other notes payable

| | A | B | C | D | E | F |
|---|---|---|---|---|---|---|
| 1 | **Public Service Company of New Mexico** | | | | | |
| 2 | **Schedule G-4** | | | | | |
| 3 | **Cost of Short-Term Borrowed Capital - Summary** | | | | | |
| 4 | **Base Period Ending 6/30/2026** | | | | | |
| 5 | **This schedule is sponsored by PNM Witness Agrawal** | | | | | |
| 6 | | | | | | |
| 7 | **Description** | **Issue Date** | **Maturity Date** | **Coupon/ Nominal Interest Rate** | **Principal Amount of Issue** | **Interest Requirements** |
| 8 | | | | | | |
| 9 | Revolver Credit Facility and Commercial Paper | VARIOUS | VARIOUS | VARIOUS | VARIOUS | VARIOUS |
| 10 | | | | | | |
| 11 | Term Loans | VARIOUS | VARIOUS | VARIOUS | 315,000,000 | VARIOUS |
| 12 | | | | | | |
| 13 | | Notes: | | | | |
| 14 | | Base period data is historical information from the Company's Book Balance Amounts. | | | | |

| | A | G | H |
|---|---|---|---|
| 1 | **Public Service Company of New Mexico** | | |
| 2 | **Schedule G-4** | | |
| 3 | **Cost of Short-Term Borrowed Capital - Summary** | | |
| 4 | **Base Period Ending 6/30/2026** | | |
| 5 | **This schedule is sponsored by PNM Witness Agrawal** | | |
| 6 | | | |
| 7 | **Description** | **Average Principal Balance** | **Average Weighted Interest Cost Rate** |
| 8 | | | |
| 9 | Revolver Credit Facility and Commercial Paper | 195,318,904 | 5.18% |
| 10 | | | |
| 11 | Term Loans | 343,931,507 | 4.92% |
| 12 | | | |
| 13 | | | |
| 14 | | | |

| | A | B | C | D | E | F |
|---|---|---|---|---|---|---|
| 1 | **Public Service Company of New Mexico** | | | | | |
| 2 | **Schedule G-4** | | | | | |
| 3 | **Cost of Short-Term Borrowed Capital - Monthly Details** | | | | | |
| 4 | **Base Period Ending 6/30/2026** | | | | | |
| 5 | **This schedule is sponsored by PNM Witness Agrawal** | | | | | |
| 6 | | | | | | |
| 7 | | **Revolver Credit Facility and Commercial Paper** | | **Term Loans** | | |
| 8 | **Month** | **Average Principal** | **Average Cost** | **Average Principal** | **Average Cost** | **Reference** |
| 9 | | | | | | |
| 10 | Jul-25 | 236,638,710 | 5.68% | 395,000,000 | 5.33% | |
| 11 | Aug-25 | 166,983,871 | 5.70% | 395,000,000 | 5.35% | |
| 12 | Sep-25 | 158,316,667 | 5.63% | 395,000,000 | 5.28% | |
| 13 | Oct-25 | 165,480,645 | 5.47% | 395,000,000 | 5.11% | |
| 14 | Nov-25 | 228,980,000 | 5.34% | 339,000,000 | 4.97% | |
| 15 | Dec-25 | 198,977,419 | 5.22% | 315,000,000 | 4.82% | |
| 16 | Jan-26 | 198,916,129 | 4.99% | 315,000,000 | 4.67% | |
| 17 | Feb-26 | 244,925,000 | 4.90% | 315,000,000 | 4.63% | |
| 18 | Mar-26 | 205,258,065 | 4.83% | 315,000,000 | 4.64% | |
| 19 | Apr-26 | 144,040,000 | 5.07% | 315,000,000 | 4.63% | |
| 20 | May-26 | 185,438,710 | 4.79% | 315,000,000 | 4.60% | |
| 21 | Jun-26 | 213,496,667 | 4.63% | 315,000,000 | 4.57% | |
| 22 | | | | | | |
| 23 | Averages | 195,318,904 | 5.18% | 343,931,507 | 4.92% | |
| 24 | | | | | | |
| 25 | | Notes: | | | | |
| 26 | | 17.9.530.14 G (4) NMAC requires the applicant to show the embedded cost of borrowed capital with a | | | | |
| 27 | | term of maturity of less than one year from date of issue. PNM also has up to $315,000,000 in term loan | | | | |
| 28 | | debt over this period with an original maturity of 18 months. This debt is authorized in accordance | | | | |
| 29 | | with NMSA 62-6-8 as short-term debt and is not included in the weighted cost of debt calculation. | | | | |
| 30 | | Base period data is historical information from the Company's Book Balance Amounts | | | | |

| | A | B | C | D | E | F |
|---|---|---|---|---|---|---|
| 1 | **Public Service Company of New Mexico** | | | | | |
| 2 | **Schedule G-4** | | | | | |
| 3 | **Cost of Short-Term Borrowed Capital - Summary** | | | | | |
| 4 | **Linkage Ending 9/30/2027** | | | | | |
| 5 | **This schedule is sponsored by PNM Witness Agrawal** | | | | | |
| 6 | | | | | | |
| 7 | **Description** | **Issue Date** | **Maturity Date** | **Coupon/ Nominal Interest Rate** | **Principal Amount of Issue at Offering** | **Interest Requirements** |
| 8 | | | | | | |
| 9 | Revolver Credit Facility and Commercial Paper | VARIOUS | VARIOUS | N/A | VARIOUS | N/A |
| 10 | | | | | | |
| 11 | Term Loans | VARIOUS | VARIOUS | N/A | VARIOUS | N/A |

| | A | G | H |
|---|---|---|---|
| 1 | **Public Service Company of New Mexico** | | |
| 2 | **Schedule G-4** | | |
| 3 | **Cost of Short-Term Borrowed Capital - Summary** | | |
| 4 | **Linkage Ending 9/30/2027** | | |
| 5 | **This schedule is sponsored by PNM Witness Agrawal** | | |
| 6 | | | |
| 7 | **Description** | **Average Principal Balance** | **Average Weighted Interest Cost Rate** |
| 8 | | | |
| 9 | Revolver Credit Facility and Commercial Paper | 119,840,154 | 4.39% |
| 10 | | | |
| 11 | Term Loans | 315,000,000 | 4.79% |

| | A | B | C | D | E | F |
|---|---|---|---|---|---|---|
| 1 | **Public Service Company of New Mexico** | | | | | |
| 2 | **Schedule G-4** | | | | | |
| 3 | **Cost of Short-Term Borrowed Capital - Monthly Details** | | | | | |
| 4 | **Linkage Ending 9/30/2027** | | | | | |
| 5 | **This schedule is sponsored by PNM Witness Agrawal** | | | | | |
| 6 | | | | | | |
| 7 | | **Revolver Credit Facility and Commercial Paper** | | **Term Loans** | | |
| 8 | **Month** | **Average Principal** | **Average Cost** | **Average Principal** | **Average Cost** | **Reference** |
| 9 | | | | | | |
| 10 | Jul-26 | 240,081,863 | 4.88% | 315,000,000 | 4.53% | |
| 11 | Aug-26 | 25,751,043 | 4.92% | 315,000,000 | 4.57% | |
| 12 | Sep-26 | 9,208,079 | 4.95% | 315,000,000 | 4.60% | |
| 13 | Oct-26 | 47,787,944 | 4.07% | 315,000,000 | 4.62% | |
| 14 | Nov-26 | 83,790,273 | 4.09% | 315,000,000 | 4.64% | |
| 15 | Dec-26 | 222,160,086 | 4.15% | 315,000,000 | 4.70% | |
| 16 | Jan-27 | 325,365,272 | 4.28% | 315,000,000 | 4.83% | |
| 17 | Feb-27 | 29,247,973 | 4.30% | 315,000,000 | 4.85% | |
| 18 | Mar-27 | 75,597,819 | 4.34% | 315,000,000 | 4.89% | |
| 19 | Apr-27 | 137,307,396 | 4.37% | 315,000,000 | 4.92% | |
| 20 | May-27 | 212,550,054 | 4.38% | 315,000,000 | 4.93% | |
| 21 | Jun-27 | 62,313,743 | 4.41% | 315,000,000 | 4.96% | |
| 22 | Jul-27 | 93,805,004 | 4.41% | 315,000,000 | 4.96% | |
| 23 | Aug-27 | 118,051,437 | 4.42% | 315,000,000 | 4.97% | |
| 24 | Sep-27 | 99,125,202 | 4.41% | 315,000,000 | 4.96% | |
| 25 | | | | | | |
| 26 | Averages | 119,840,154 | 4.39% | 315,000,000 | 4.79% | |
| 27 | | | | | | |
| 28 | | Notes: | | | | |
| 29 | | 17.9.530.14 G (4) NMAC requires the applicant to show the embedded cost of borrowed capital with a | | | | |
| 30 | | term of maturity of less than one year from date of issue. PNM also has up to $315,000,000 in term | | | | |
| 31 | | loan debt over this period with an original maturity of 18 months. This debt is authorized in accordance | | | | |
| 32 | | with NMSA 62-6-8 as short-term debt and is not included in the weighted cost of debt calculation. | | | | |

| | A | B | C | D | E | F |
|---|---|---|---|---|---|---|
| 1 | **Public Service Company of New Mexico** | | | | | |
| 2 | **Schedule G-4** | | | | | |
| 3 | **Cost of Short-Term Borrowed Capital - Summary** | | | | | |
| 4 | **Test Period Ending 9/30/2028** | | | | | |
| 5 | **This schedule is sponsored by PNM Witness Agrawal** | | | | | |
| 6 | | | | | | |
| 7 | **Description** | **Issue Date** | **Maturity Date** | **Coupon/ Nominal Interest Rate** | **Principal Amount of Issue** | **Interest Requirements** |
| 8 | | | | | | |
| 9 | Revolver Credit Facility and Commercial Paper | VARIOUS | VARIOUS | N/A | VARIOUS | N/A |
| 10 | | | | | | |
| 11 | Term Loans | VARIOUS | VARIOUS | N/A | VARIOUS | N/A |

| | A | G | H |
|---|---|---|---|
| 1 | **Public Service Company of New Mexico** | | |
| 2 | **Schedule G-4** | | |
| 3 | **Cost of Short-Term Borrowed Capital - Summary** | | |
| 4 | **Test Period Ending 9/30/2028** | | |
| 5 | **This schedule is sponsored by PNM Witness Agrawal** | | |
| 6 | | | |
| 7 | **Description** | **Average Principal Balance** | **Average Weighted Interest Cost Rate** |
| 8 | | | |
| 9 | Revolver Credit Facility and Commercial Paper | 135,584,492 | 4.37% |
| 10 | | | |
| 11 | Term Loans | 315,000,000 | 4.92% |

| | A | B | C | D | E | F |
|---|---|---|---|---|---|---|
| 1 | **Public Service Company of New Mexico** | | | | | |
| 2 | **Schedule G-4** | | | | | |
| 3 | **Cost of Short-Term Borrowed Capital - Monthly Details** | | | | | |
| 4 | **Test Period Ending 9/30/2028** | | | | | |
| 5 | **This schedule is sponsored by PNM Witness Agrawal** | | | | | |
| 6 | | | | | | |
| 7 | | **Revolver Credit Facility and Commercial Paper** | | **Term Loans** | | |
| 8 | **Month** | **Average Principal** | **Average Cost** | **Average Principal** | **Average Cost** | **Reference** |
| 9 | | | | | | |
| 10 | Oct-27 | 104,802,426 | 4.40% | 315,000,000 | 4.95% | |
| 11 | Nov-27 | 134,172,185 | 4.40% | 315,000,000 | 4.95% | |
| 12 | Dec-27 | 151,765,254 | 4.40% | 315,000,000 | 4.95% | |
| 13 | Jan-28 | 198,706,356 | 4.39% | 315,000,000 | 4.94% | |
| 14 | Feb-28 | 261,146,123 | 4.39% | 315,000,000 | 4.94% | |
| 15 | Mar-28 | 34,936,026 | 4.36% | 315,000,000 | 4.91% | |
| 16 | Apr-28 | 67,231,628 | 4.36% | 315,000,000 | 4.91% | |
| 17 | May-28 | 118,259,076 | 4.36% | 315,000,000 | 4.91% | |
| 18 | Jun-28 | 162,664,470 | 4.36% | 315,000,000 | 4.91% | |
| 19 | Jul-28 | 168,762,785 | 4.35% | 315,000,000 | 4.90% | |
| 20 | Aug-28 | 192,576,116 | 4.34% | 315,000,000 | 4.89% | |
| 21 | Sep-28 | 39,671,688 | 4.34% | 315,000,000 | 4.89% | |
| 22 | | | | | | |
| 23 | Averages | 135,584,492 | 4.37% | 315,000,000 | 4.92% | |
| 24 | | | | | | |
| 25 | | Notes: | | | | |
| 26 | | 17.9.530.14 G (4) NMAC requires the applicant to show the embedded cost of borrowed capital with | | | | |
| 27 | | a term of maturity of less than one year from date of issue. PNM also has up to $315,000,000 in term | | | | |
| 28 | | loan debt over this period with an original maturity of 18 months. This debt is authorized in accordance | | | | |
| 29 | | with NMSA 62-6-8 as short-term debt and is not included in the weighted cost of debt calculation. | | | | |

| | A | B | C | D | E | F |
|---|---|---|---|---|---|---|
| 1 | **Public Service Company of New Mexico** | | | | | |
| 2 | **Schedule G-4** | | | | | |
| 3 | **Cost of Short-Term Borrowed Capital - Summary** | | | | | |
| 4 | **Twelve Months Ending 12/31/2028** | | | | | |
| 5 | **This schedule is sponsored by PNM Witness Agrawal** | | | | | |
| 6 | | | | | | |
| 7 | **Description** | **Issue Date** | **Maturity Date** | **Coupon/ Nominal Interest Rate** | **Principal Amount of Issue** | **Interest Requirements** |
| 8 | | | | | | |
| 9 | Revolver Credit Facility and Commercial Paper | VARIOUS | VARIOUS | N/A | VARIOUS | N/A |
| 10 | | | | | | |
| 11 | Term Loans | VARIOUS | VARIOUS | N/A | VARIOUS | N/A |

| | A | G | H |
|---|---|---|---|
| 1 | **Public Service Company of New Mexico** | | |
| 2 | **Schedule G-4** | | |
| 3 | **Cost of Short-Term Borrowed Capital - Summary** | | |
| 4 | **Twelve Months Ending 12/31/2028** | | |
| 5 | **This schedule is sponsored by PNM Witness Agrawal** | | |
| 6 | | | |
| 7 | **Description** | **Average Principal Balance** | **Average Weighted Interest Cost Rate** |
| 8 | | | |
| 9 | Revolver Credit Facility and Commercial Paper | 131,274,345 | 4.36% |
| 10 | | | |
| 11 | Term Loans | 315,000,000 | 4.90% |

| | A | B | C | D | E | F |
|---|---|---|---|---|---|---|
| 1 | **Public Service Company of New Mexico** | | | | | |
| 2 | **Schedule G-4** | | | | | |
| 3 | **Cost of Short-Term Borrowed Capital - Monthly Details** | | | | | |
| 4 | **Twelve Months Ending 12/31/2028** | | | | | |
| 5 | **This schedule is sponsored by PNM Witness Agrawal** | | | | | |
| 6 | | | | | | |
| 7 | | **Revolver Credit Facility and Commercial Paper** | | **Term Loans** | | |
| 8 | **Month** | **Average Principal** | **Average Cost** | **Average Principal** | **Average Cost** | **Reference** |
| 9 | | | | | | |
| 10 | Jan-28 | 198,706,356 | 4.39% | 315,000,000 | 4.94% | |
| 11 | Feb-28 | 261,146,123 | 4.39% | 315,000,000 | 4.94% | |
| 12 | Mar-28 | 34,936,026 | 4.36% | 315,000,000 | 4.91% | |
| 13 | Apr-28 | 67,231,628 | 4.36% | 315,000,000 | 4.91% | |
| 14 | May-28 | 118,259,076 | 4.36% | 315,000,000 | 4.91% | |
| 15 | Jun-28 | 162,664,470 | 4.36% | 315,000,000 | 4.91% | |
| 16 | Jul-28 | 168,762,785 | 4.35% | 315,000,000 | 4.90% | |
| 17 | Aug-28 | 192,576,116 | 4.34% | 315,000,000 | 4.89% | |
| 18 | Sep-28 | 39,671,688 | 4.34% | 315,000,000 | 4.89% | |
| 19 | Oct-28 | 74,175,871 | 4.33% | 315,000,000 | 4.88% | |
| 20 | Nov-28 | 95,893,734 | 4.33% | 315,000,000 | 4.88% | |
| 21 | Dec-28 | 168,686,964 | 4.33% | 315,000,000 | 4.88% | |
| 22 | | | | | | |
| 23 | Averages | 131,274,345 | 4.36% | 315,000,000 | 4.90% | |
| 24 | | | | | | |
| 25 | | Notes: | | | | |
| 26 | | 17.9.530.14 G (4) NMAC requires the applicant to show the embedded cost of borrowed capital with | | | | |
| 27 | | a term of maturity of less than one year from date of issue. PNM also has up to $315,000,000 in term | | | | |
| 28 | | loan debt over this period with an original maturity of 18 months. This debt is authorized in accordance | | | | |
| 29 | | with NMSA 62-6-8 as short-term debt and is not included in the weighted cost of debt calculation. | | | | |

| | A | B | C | D | E | F |
|---|---|---|---|---|---|---|
| 1 | **Public Service Company of New Mexico** | | | | | |
| 2 | **Schedule G-4** | | | | | |
| 3 | **Cost of Short-Term Borrowed Capital - Summary** | | | | | |
| 4 | **Twelve Months Ending 12/31/2029** | | | | | |
| 5 | **This schedule is sponsored by PNM Witness Agrawal** | | | | | |
| 6 | | | | | | |
| 7 | **Description** | **Issue Date** | **Maturity Date** | **Coupon/ Nominal Interest Rate** | **Principal Amount of Issue** | **Interest Requirements** |
| 8 | | | | | | |
| 9 | Revolver Credit Facility and Commercial Paper | VARIOUS | VARIOUS | N/A | VARIOUS | N/A |
| 10 | | | | | | |
| 11 | Term Loans | VARIOUS | VARIOUS | N/A | VARIOUS | N/A |

| | A | G | H |
|---|---|---|---|
| 1 | **Public Service Company of New Mexico** | | |
| 2 | **Schedule G-4** | | |
| 3 | **Cost of Short-Term Borrowed Capital - Summary** | | |
| 4 | **Twelve Months Ending 12/31/2029** | | |
| 5 | **This schedule is sponsored by PNM Witness Agrawal** | | |
| 6 | | | |
| 7 | **Description** | **Average Principal Balance** | **Average Weighted Interest Cost Rate** |
| 8 | | | |
| 9 | Revolver Credit Facility and Commercial Paper | 220,874,665 | 4.63% |
| 10 | | | |
| 11 | Term Loans | 315,000,000 | 4.66% |

| | A | B | C | D | E | F |
|---|---|---|---|---|---|---|
| 1 | **Public Service Company of New Mexico** | | | | | |
| 2 | **Schedule G-4** | | | | | |
| 3 | **Cost of Short-Term Borrowed Capital - Monthly Details** | | | | | |
| 4 | **Twelve Months Ending 12/31/2029** | | | | | |
| 5 | **This schedule is sponsored by PNM Witness Agrawal** | | | | | |
| 6 | | | | | | |
| 7 | | **Revolver Credit Facility and Commercial Paper** | | **Term Loans** | | |
| 8 | **Month** | **Average Principal** | **Average Cost** | **Average Principal** | **Average Cost** | **Reference** |
| 9 | | | | | | |
| 10 | Jan-29 | 237,721,822 | 4.62% | 315,000,000 | 4.62% | |
| 11 | Feb-29 | 303,720,146 | 4.62% | 315,000,000 | 4.62% | |
| 12 | Mar-29 | 352,439,337 | 4.62% | 315,000,000 | 4.62% | |
| 13 | Apr-29 | 418,152,952 | 4.62% | 315,000,000 | 4.62% | |
| 14 | May-29 | 320,230,451 | 4.62% | 315,000,000 | 4.62% | |
| 15 | Jun-29 | 294,214,110 | 4.62% | 315,000,000 | 4.62% | |
| 16 | Jul-29 | 219,856,042 | 4.62% | 315,000,000 | 4.62% | |
| 17 | Aug-29 | 158,531,808 | 4.62% | 315,000,000 | 4.62% | |
| 18 | Sep-29 | 103,682,587 | 4.62% | 315,000,000 | 4.62% | |
| 19 | Oct-29 | 70,446,779 | 4.75% | 315,000,000 | 4.75% | |
| 20 | Nov-29 | 60,621,796 | 4.76% | 315,000,000 | 4.76% | |
| 21 | Dec-29 | 118,675,228 | 4.76% | 315,000,000 | 4.76% | |
| 22 | | | | | | |
| 23 | Averages | 220,874,665 | 4.63% | 315,000,000 | 4.66% | |
| 24 | | | | | | |
| 25 | | Notes: | | | | |
| 26 | | 17.9.530.14 G (4) NMAC requires the applicant to show the embedded cost of borrowed capital with | | | | |
| 27 | | a term of maturity of less than one year from date of issue. PNM also has up to $315,000,000 in term | | | | |
| 28 | | loan debt over this period with an original maturity of 18 months. This debt is authorized in accordance | | | | |
| 29 | | with NMSA 62-6-8 as short-term debt and is not included in the weighted cost of debt calculation. | | | | |

| | A | B | C | D | E | F |
|---|---|---|---|---|---|---|
| 1 | **Public Service Company of New Mexico** | | | | | |
| 2 | **Schedule G-4** | | | | | |
| 3 | **Cost of Short-Term Borrowed Capital - Summary** | | | | | |
| 4 | **Twelve Months Ending 12/31/2030** | | | | | |
| 5 | **This schedule is sponsored by PNM Witness Agrawal** | | | | | |
| 6 | | | | | | |
| 7 | **Description** | **Issue Date** | **Maturity Date** | **Coupon/ Nominal Interest Rate** | **Principal Amount of Issue** | **Interest Requirements** |
| 8 | | | | | | |
| 9 | Revolver Credit Facility and Commercial Paper | VARIOUS | VARIOUS | N/A | VARIOUS | N/A |
| 10 | | | | | | |
| 11 | Term Loans | VARIOUS | VARIOUS | N/A | VARIOUS | N/A |

| | A | G | H |
|---|---|---|---|
| 1 | **Public Service Company of New Mexico** | | |
| 2 | **Schedule G-4** | | |
| 3 | **Cost of Short-Term Borrowed Capital - Summary** | | |
| 4 | **Twelve Months Ending 12/31/2030** | | |
| 5 | **This schedule is sponsored by PNM Witness Agrawal** | | |
| 6 | | | |
| 7 | **Description** | **Average Principal Balance** | **Average Weighted Interest Cost Rate** |
| 8 | | | |
| 9 | Revolver Credit Facility and Commercial Paper | 122,690,469 | 4.76% |
| 10 | | | |
| 11 | Term Loans | 315,000,000 | 4.76% |

| | A | B | C | D | E | F |
|---|---|---|---|---|---|---|
| 1 | **Public Service Company of New Mexico** | | | | | |
| 2 | **Schedule G-4** | | | | | |
| 3 | **Cost of Short-Term Borrowed Capital - Monthly Details** | | | | | |
| 4 | **Twelve Months Ending 12/31/2030** | | | | | |
| 5 | **This schedule is sponsored by PNM Witness Agrawal** | | | | | |
| 6 | | | | | | |
| 7 | | **Revolver Credit Facility and Commercial Paper** | | **Term Loans** | | |
| 8 | **Month** | **Average Principal** | **Average Cost** | **Average Principal** | **Average Cost** | **Reference** |
| 9 | | | | | | |
| 10 | Jan-30 | 75,717,911 | 4.76% | 315,000,000 | 4.76% | |
| 11 | Feb-30 | 74,754,648 | 4.76% | 315,000,000 | 4.76% | |
| 12 | Mar-30 | 34,171,348 | 4.76% | 315,000,000 | 4.76% | |
| 13 | Apr-30 | 24,715,902 | 4.76% | 315,000,000 | 4.76% | |
| 14 | May-30 | 194,460,558 | 4.76% | 315,000,000 | 4.76% | |
| 15 | Jun-30 | 168,206,788 | 4.76% | 315,000,000 | 4.76% | |
| 16 | Jul-30 | 82,340,000 | 4.76% | 315,000,000 | 4.76% | |
| 17 | Aug-30 | 201,072,846 | 4.76% | 315,000,000 | 4.76% | |
| 18 | Sep-30 | 135,877,148 | 4.76% | 315,000,000 | 4.76% | |
| 19 | Oct-30 | 70,770,428 | 4.76% | 315,000,000 | 4.76% | |
| 20 | Nov-30 | 38,129,728 | 4.76% | 315,000,000 | 4.76% | |
| 21 | Dec-30 | 363,434,780 | 4.76% | 315,000,000 | 4.76% | |
| 22 | | | | | | |
| 23 | Averages | 122,690,469 | 4.76% | 315,000,000 | 4.76% | |
| 24 | | | | | | |
| 25 | | Notes: | | | | |
| 26 | | 17.9.530.14 G (4) NMAC requires the applicant to show the embedded cost of borrowed capital with | | | | |
| 27 | | a term of maturity of less than one year from date of issue. PNM also has up to $315,000,000 in term | | | | |
| 28 | | loan debt over this period with an original maturity of 18 months. This debt is authorized in accordance | | | | |
| 29 | | with NMSA 62-6-8 as short-term debt and is not included in the weighted cost of debt calculation. | | | | |

# PNM Schedule G-5

Embedded cost of preferred stock capital

| | A | B | C | D | E | F |
|---|---|---|---|---|---|---|
| 1 | **Public Service Company of** | | | | | |
| 2 | **New Mexico** | | | | | |
| 3 | **Schedule G-5** | | | | | |
| 4 | **Embedded Cost of Preferred Stock** | | | | | |
| 5 | **Capital** | | | | | |
| 6 | **Base Period Ending 6/30/2026** | | | | | |
| 7 | **Linkage Ending 9/30/2027** | | | | | |
| 8 | **Test Period Ending 9/30/2028** | | | | | |
| 9 | **Twelve Months Ending 12/31/2028,** | | | | | |
| 10 | **12/31/2029 and 12/31/2030** | | | | | |
| 11 | **This schedule is sponsored by PNM** | | | | | |
| 12 | **Witness Agrawal** | | | | | |
| 13 | | | | | | |
| 14 | **Description** | **Issue Date** | **Dividend Rate** | **Offering Price** | **Gross Proceeds** (in thousands) | **Underwriter Commission** |
| 15 | | | | | | |
| 16 | 115,293 Shares | 1/26/1965 | 4.58% | 102 | 13,000 | - |

| | A | B | G | H | I | J |
|---|---|---|---|---|---|---|
| 1 | **Public Service Company of** | | | | | |
| 2 | **New Mexico** | | | | | |
| 3 | **Schedule G-5** | | | | | |
| 4 | **Embedded Cost of Preferred Stock** | | | | | |
| 5 | **Capital** | | | | | |
| 6 | **Base Period Ending 6/30/2026** | | | | | |
| 7 | **Linkage Ending 9/30/2027** | | | | | |
| 8 | **Test Period Ending 9/30/2028** | | | | | |
| 9 | **Twelve Months Ending 12/31/2028,** | | | | | |
| 10 | **12/31/2029 and 12/31/2030** | | | | | |
| 11 | **This schedule is sponsored by PNM** | | | | | |
| 12 | **Witness Agrawal** | | | | | |
| 13 | | | | | | |
| 14 | **Description** | **Issue Date** | **Expense of Issue** (in thousands) | **Net Proceeds** (in thousands) | **Net Proceeds Per Unit** | **Effective Dividend Cost Rate** |
| 15 | | | | | | |
| 16 | 115,293 Shares | 1/26/1965 | 113 | 12,887 | $1.12 | 4.62% |

| | A | B | K | L | M |
|---|---|---|---|---|---|
| 1 | **Public Service Company of** | | | | |
| 2 | **New Mexico** | | | | |
| 3 | **Schedule G-5** | | | | |
| 4 | **Embedded Cost of Preferred Stock** | | | | |
| 5 | **Capital** | | | | |
| 6 | **Base Period Ending 6/30/2026** | | | | |
| 7 | **Linkage Ending 9/30/2027** | | | | |
| 8 | **Test Period Ending 9/30/2028** | | | | |
| 9 | **Twelve Months Ending 12/31/2028,** | | | | |
| 10 | **12/31/2029 and 12/31/2030** | | | | |
| 11 | **This schedule is sponsored by PNM** | | | | |
| 12 | **Witness Agrawal** | | | | |
| 13 | | | | | |
| 14 | **Description** | **Issue Date** | **Principal Outstanding** (in thousands) | **Annual Dividend Requirement** | **Reference** |
| 15 | | | | | |
| 16 | 115,293 Shares | 1/26/1965 | 11,529 | 4.58% | |

| | A |
|---|---|
| 1 | **Public Service Company of New Mexico** |
| 2 | **Schedule G-5** |
| 3 | **Embedded Cost of Preferred Stock Capital (Notes)** |
| 4 | **Base Period Ending 6/30/2026** |
| 5 | **Linkage Ending 9/30/2027** |
| 6 | **Test Period Ending 9/30/2028** |
| 7 | **Twelve Months Ending 12/31/2028, 12/31/2029, 12/31/2030** |
| 8 | **This schedule is sponsored by PNM Witness Agrawal** |
| 9 | |
| 10 | PNM does not have any preferred dividend coverage requirements in the company’s certificate of incorporation |
| 11 | There are no changes from the Base Period to the Test Period for Preferred Stock Capital |
| 12 | Base period data is historical information from the Company's Book Balance Amounts |

# PNM Schedule G-6

Ratio of earnings to fixed charges

| | A | B |
|---|---|---|
| 1 | **Public Service Company of New Mexico** | |
| 2 | **Schedule G-6** | |
| 3 | **Ratio of Earnings to Fixed Charges** | |
| 4 | **Base Period Ending 6/30/2026** | |
| 5 | **Test Period Ending 9/30/2028** | |
| 6 | **This schedule is sponsored by PNM Witness Agrawal** | |
| 7 | | |
| 8 | **Description** | **Twelve Months Jan-21 - Dec-21** |
| 9 | | |
| 10 | | |
| 11 | Fixed charges, as defined by the Securities and Exchange Commission: | |
| 12 | a. Interest on Long-term Debt (including interest capitalized) | 45,245,624 |
| 13 | b. Amortization of Debt Premium, Discount and Expenses | 4,850,640 |
| 14 | c. Interest on Short-term Debt | 80,249 |
| 15 | d. Other Interest | 1,096,250 |
| 16 | e. Estimated Interest Factor of Lease Rental Charges | 262,788 |
| 17 | f. Interest Capitalized | 3,713,416 |
| 18 | Total Fixed Charges | 55,248,967 |
| 19 | | |
| 20 | Earnings, as defined by the Securities and Exchange Commission: | |
| 21 | a. Earnings After Income Taxes | 171,031,802 |
| 22 | b. Add Fixed Charges as Above | 55,248,967 |
| 23 | c. Non-controlling interest in earnings of Valencia | (15,490,493) |
| 24 | d. Interest Capitalized | (3,713,416) |
| 25 | Earnings Available for Fixed Charges, After Provision for Income Taxes | 207,076,860 |
| 26 | | |
| 27 | Add Income Taxes | |
| 28 | a. Federal | - |
| 29 | b. Deferred-net | 27,357,234 |
| 30 | c. Investment Tax Credit Adjustment | (236,744) |
| 31 | d. Investment Tax Credit | |
| 32 | e. State | (128,437) |
| 33 | Earnings Available for Fixed Charges, Before Provision for Income Taxes | 234,068,913 |
| 34 | | |
| 35 | Ratio of Earnings to Fixed Charges, After Provision for Income Taxes | 3.75 |
| 36 | | |
| 37 | Ratio of Earnings to Fixed Charges, Before Provision for Income Taxes | 4.24 |

| | A | C |
|---|---|---|
| 1 | **Public Service Company of New Mexico** | |
| 2 | **Schedule G-6** | |
| 3 | **Ratio of Earnings to Fixed Charges** | |
| 4 | **Base Period Ending 6/30/2026** | |
| 5 | **Test Period Ending 9/30/2028** | |
| 6 | **This schedule is sponsored by PNM Witness Agrawal** | |
| 7 | | |
| 8 | **Description** | **Twelve Months Jan-22 - Dec-22** |
| 9 | | |
| 10 | | |
| 11 | Fixed charges, as defined by the Securities and Exchange Commission: | |
| 12 | a. Interest on Long-term Debt (including interest capitalized) | 51,186,896 |
| 13 | b. Amortization of Debt Premium, Discount and Expenses | 3,186,471 |
| 14 | c. Interest on Short-term Debt | 998,934 |
| 15 | d. Other Interest | 5,610,276 |
| 16 | e. Estimated Interest Factor of Lease Rental Charges | 326,241 |
| 17 | f. Interest Capitalized | 4,158,979 |
| 18 | Total Fixed Charges | 65,467,797 |
| 19 | | |
| 20 | Earnings, as defined by the Securities and Exchange Commission: | |
| 21 | a. Earnings After Income Taxes | 118,492,495 |
| 22 | b. Add Fixed Charges as Above | 65,467,797 |
| 23 | c. Non-controlling interest in earnings of Valencia | (15,121,603) |
| 24 | d. Interest Capitalized | (4,158,979) |
| 25 | Earnings Available for Fixed Charges, After Provision for Income Taxes | 164,679,710 |
| 26 | | |
| 27 | Add Income Taxes | |
| 28 | a. Federal | (13,532,515) |
| 29 | b. Deferred-net | 29,658,781 |
| 30 | c. Investment Tax Credit Adjustment | (172,248) |
| 31 | d. Investment Tax Credit | |
| 32 | e. State | 3,243,695 |
| 33 | Earnings Available for Fixed Charges, Before Provision for Income Taxes | 183,877,423 |
| 34 | | |
| 35 | Ratio of Earnings to Fixed Charges, After Provision for Income Taxes | 2.52 |
| 36 | | |
| 37 | Ratio of Earnings to Fixed Charges, Before Provision for Income Taxes | 2.81 |

| | A | D |
|---|---|---|
| 1 | **Public Service Company of New Mexico** | |
| 2 | **Schedule G-6** | |
| 3 | **Ratio of Earnings to Fixed Charges** | |
| 4 | **Base Period Ending 6/30/2026** | |
| 5 | **Test Period Ending 9/30/2028** | |
| 6 | **This schedule is sponsored by PNM Witness Agrawal** | |
| 7 | | |
| 8 | **Description** | **Twelve Months Jan-23 - Dec-23** |
| 9 | | |
| 10 | | |
| 11 | Fixed charges, as defined by the Securities and Exchange Commission: | |
| 12 | a. Interest on Long-term Debt (including interest capitalized) | 61,408,357 |
| 13 | b. Amortization of Debt Premium, Discount and Expenses | 2,784,720 |
| 14 | c. Interest on Short-term Debt | 9,299,030 |
| 15 | d. Other Interest | 10,393,463 |
| 16 | e. Estimated Interest Factor of Lease Rental Charges | 564,485 |
| 17 | f. Interest Capitalized | 10,091,121 |
| 18 | Total Fixed Charges | 94,541,175 |
| 19 | | |
| 20 | Earnings, as defined by the Securities and Exchange Commission: | |
| 21 | a. Earnings After Income Taxes | 54,190,360 |
| 22 | b. Add Fixed Charges as Above | 94,541,175 |
| 23 | c. Non-controlling interest in earnings of Valencia | (18,533,043) |
| 24 | d. Interest Capitalized | (10,091,121) |
| 25 | Earnings Available for Fixed Charges, After Provision for Income Taxes | 120,107,372 |
| 26 | | |
| 27 | Add Income Taxes | |
| 28 | a. Federal | 9,517,508 |
| 29 | b. Deferred-net | (21,801,157) |
| 30 | c. Investment Tax Credit Adjustment | (170,953) |
| 31 | d. Investment Tax Credit | |
| 32 | e. State | (4,303,828) |
| 33 | Earnings Available for Fixed Charges, Before Provision for Income Taxes | 103,348,943 |
| 34 | | |
| 35 | Ratio of Earnings to Fixed Charges, After Provision for Income Taxes | 1.27 |
| 36 | | |
| 37 | Ratio of Earnings to Fixed Charges, Before Provision for Income Taxes | 1.09 |

| | A | E |
|---|---|---|
| 1 | **Public Service Company of New Mexico** | |
| 2 | **Schedule G-6** | |
| 3 | **Ratio of Earnings to Fixed Charges** | |
| 4 | **Base Period Ending 6/30/2026** | |
| 5 | **Test Period Ending 9/30/2028** | |
| 6 | **This schedule is sponsored by PNM Witness Agrawal** | |
| 7 | | |
| 8 | **Description** | **Twelve Months Jan-24 - Dec-24** |
| 9 | | |
| 10 | | |
| 11 | Fixed charges, as defined by the Securities and Exchange Commission: | |
| 12 | a. Interest on Long-term Debt (including interest capitalized) | 61,397,147 |
| 13 | b. Amortization of Debt Premium, Discount and Expenses | 2,369,188 |
| 14 | c. Interest on Short-term Debt | 9,740,162 |
| 15 | d. Other Interest | 12,269,088 |
| 16 | e. Estimated Interest Factor of Lease Rental Charges | 602,853 |
| 17 | f. Interest Capitalized | 13,337,186 |
| 18 | Total Fixed Charges | 99,715,624 |
| 19 | | |
| 20 | Earnings, as defined by the Securities and Exchange Commission: | |
| 21 | a. Earnings After Income Taxes | 207,723,862 |
| 22 | b. Add Fixed Charges as Above | 99,715,624 |
| 23 | c. Non-controlling interest in earnings of Valencia | (16,039,668) |
| 24 | d. Interest Capitalized | (13,337,186) |
| 25 | Earnings Available for Fixed Charges, After Provision for Income Taxes | 278,062,632 |
| 26 | | |
| 27 | Add Income Taxes | |
| 28 | a. Federal | (7,004,816) |
| 29 | b. Deferred-net | 34,678,722 |
| 30 | c. Investment Tax Credit Adjustment | 7,224,165 |
| 31 | d. Investment Tax Credit | |
| 32 | e. State | (5,681,004) |
| 33 | Earnings Available for Fixed Charges, Before Provision for Income Taxes | 307,279,700 |
| 34 | | |
| 35 | Ratio of Earnings to Fixed Charges, After Provision for Income Taxes | 2.79 |
| 36 | | |
| 37 | Ratio of Earnings to Fixed Charges, Before Provision for Income Taxes | 3.08 |

| | A | F |
|---|---|---|
| 1 | **Public Service Company of New Mexico** | |
| 2 | **Schedule G-6** | |
| 3 | **Ratio of Earnings to Fixed Charges** | |
| 4 | **Base Period Ending 6/30/2026** | |
| 5 | **Test Period Ending 9/30/2028** | |
| 6 | **This schedule is sponsored by PNM Witness Agrawal** | |
| 7 | | |
| 8 | **Description** | **Twelve Months Jan-25 - Dec-25** |
| 9 | | |
| 10 | | |
| 11 | Fixed charges, as defined by the Securities and Exchange Commission: | |
| 12 | a. Interest on Long-term Debt (including interest capitalized) | 87,831,539 |
| 13 | b. Amortization of Debt Premium, Discount and Expenses | 2,252,519 |
| 14 | c. Interest on Short-term Debt | 12,006,697 |
| 15 | d. Other Interest | 7,412,657 |
| 16 | e. Estimated Interest Factor of Lease Rental Charges | 784,882 |
| 17 | f. Interest Capitalized | 14,943,920 |
| 18 | Total Fixed Charges | 125,232,214 |
| 19 | | |
| 20 | Earnings, as defined by the Securities and Exchange Commission: | |
| 21 | a. Earnings After Income Taxes | 105,012,932 |
| 22 | b. Add Fixed Charges as Above | 125,232,214 |
| 23 | c. Non-controlling interest in earnings of Valencia | (17,935,806) |
| 24 | d. Interest Capitalized | (14,943,920) |
| 25 | Earnings Available for Fixed Charges, After Provision for Income Taxes | 197,365,420 |
| 26 | | |
| 27 | Add Income Taxes | |
| 28 | a. Federal | (9,044,078) |
| 29 | b. Deferred-net | 5,885,641 |
| 30 | c. Investment Tax Credit Adjustment | (169,438) |
| 31 | d. Investment Tax Credit | |
| 32 | e. State | (1,113,967) |
| 33 | Earnings Available for Fixed Charges, Before Provision for Income Taxes | 192,923,578 |
| 34 | | |
| 35 | Ratio of Earnings to Fixed Charges, After Provision for Income Taxes | 1.58 |
| 36 | | |
| 37 | Ratio of Earnings to Fixed Charges, Before Provision for Income Taxes | 1.54 |

| | A | G |
|---|---|---|
| 1 | **Public Service Company of New Mexico** | |
| 2 | **Schedule G-6** | |
| 3 | **Ratio of Earnings to Fixed Charges** | |
| 4 | **Base Period Ending 6/30/2026** | |
| 5 | **Test Period Ending 9/30/2028** | |
| 6 | **This schedule is sponsored by PNM Witness Agrawal** | |
| 7 | | |
| 8 | **Description** | **Base Period Jul-25 - Jun-26** |
| 9 | | |
| 10 | | |
| 11 | Fixed charges, as defined by the Securities and Exchange Commission: | |
| 12 | a. Interest on Long-term Debt (including interest capitalized) | 94,759,668 |
| 13 | b. Amortization of Debt Premium, Discount and Expenses | 2,154,128 |
| 14 | c. Interest on Short-term Debt | 10,250,057 |
| 15 | d. Other Interest | 6,095,444 |
| 16 | e. Estimated Interest Factor of Lease Rental Charges | 872,478 |
| 17 | f. Interest Capitalized | 14,767,711 |
| 18 | Total Fixed Charges | 128,899,486 |
| 19 | | |
| 20 | Earnings, as defined by the Securities and Exchange Commission: | |
| 21 | a. Earnings After Income Taxes | 109,672,670 |
| 22 | b. Add Fixed Charges as Above | 128,899,486 |
| 23 | c. Non-controlling interest in earnings of Valencia | (18,018,627) |
| 24 | d. Interest Capitalized | (14,767,711) |
| 25 | Earnings Available for Fixed Charges, After Provision for Income Taxes | 205,785,818 |
| 26 | | |
| 27 | Add Income Taxes | |
| 28 | a. Federal | (9,044,078) |
| 29 | b. Deferred-net | 7,110,000 |
| 30 | c. Investment Tax Credit Adjustment | (174,157) |
| 31 | d. Investment Tax Credit | - |
| 32 | e. State | (1,047,363) |
| 33 | Earnings Available for Fixed Charges, Before Provision for Income Taxes | 202,630,220 |
| 34 | | |
| 35 | Ratio of Earnings to Fixed Charges, After Provision for Income Taxes | 1.60 |
| 36 | | |
| 37 | Ratio of Earnings to Fixed Charges, Before Provision for Income Taxes | 1.57 |

| | A | H |
|---|---|---|
| 1 | **Public Service Company of New Mexico** | |
| 2 | **Schedule G-6** | |
| 3 | **Ratio of Earnings to Fixed Charges** | |
| 4 | **Base Period Ending 6/30/2026** | |
| 5 | **Test Period Ending 9/30/2028** | |
| 6 | **This schedule is sponsored by PNM Witness Agrawal** | |
| 7 | | |
| 8 | **Description** | **Linkage 1 Jul-26 - Jun-27** |
| 9 | | |
| 10 | | |
| 11 | Fixed charges, as defined by the Securities and Exchange Commission: | |
| 12 | a. Interest on Long-term Debt (including interest capitalized) | 112,349,639 |
| 13 | b. Amortization of Debt Premium, Discount and Expenses | 2,743,276 |
| 14 | c. Interest on Short-term Debt | 5,380,534 |
| 15 | d. Other Interest | 4,916,318 |
| 16 | e. Estimated Interest Factor of Lease Rental Charges | 898,652 |
| 17 | f. Interest Capitalized | 17,820,021 |
| 18 | Total Fixed Charges | 144,108,440 |
| 19 | | |
| 20 | Earnings, as defined by the Securities and Exchange Commission: | |
| 21 | a. Earnings After Income Taxes | 179,705,992 |
| 22 | b. Add Fixed Charges as Above | 144,108,440 |
| 23 | c. Non-controlling interest in earnings of Valencia | - |
| 24 | d. Interest Capitalized | (17,820,021) |
| 25 | Earnings Available for Fixed Charges, After Provision for Income Taxes | 305,994,411 |
| 26 | | |
| 27 | Add Income Taxes | |
| 28 | a. Federal | (1,247,135) |
| 29 | b. Deferred-net | 23,983,435 |
| 30 | c. Investment Tax Credit Adjustment | |
| 31 | d. Investment Tax Credit | - |
| 32 | e. State | - |
| 33 | Earnings Available for Fixed Charges, Before Provision for Income Taxes | 328,730,711 |
| 34 | | |
| 35 | Ratio of Earnings to Fixed Charges, After Provision for Income Taxes | 2.12 |
| 36 | | |
| 37 | Ratio of Earnings to Fixed Charges, Before Provision for Income Taxes | 2.28 |

| | A | I |
|---|---|---|
| 1 | **Public Service Company of New Mexico** | |
| 2 | **Schedule G-6** | |
| 3 | **Ratio of Earnings to Fixed Charges** | |
| 4 | **Base Period Ending 6/30/2026** | |
| 5 | **Test Period Ending 9/30/2028** | |
| 6 | **This schedule is sponsored by PNM Witness Agrawal** | |
| 7 | | |
| 8 | **Description** | **Linkage 2 Oct-26 - Sep-27** |
| 9 | | |
| 10 | | |
| 11 | Fixed charges, as defined by the Securities and Exchange Commission: | |
| 12 | a. Interest on Long-term Debt (including interest capitalized) | 119,718,367 |
| 13 | b. Amortization of Debt Premium, Discount and Expenses | 2,885,903 |
| 14 | c. Interest on Short-term Debt | 5,403,680 |
| 15 | d. Other Interest | 4,864,021 |
| 16 | e. Estimated Interest Factor of Lease Rental Charges | 925,612 |
| 17 | f. Interest Capitalized | 19,588,896 |
| 18 | Total Fixed Charges | 153,386,479 |
| 19 | | |
| 20 | Earnings, as defined by the Securities and Exchange Commission: | |
| 21 | a. Earnings After Income Taxes | 176,520,559 |
| 22 | b. Add Fixed Charges as Above | 153,386,479 |
| 23 | c. Non-controlling interest in earnings of Valencia | - |
| 24 | d. Interest Capitalized | (19,588,896) |
| 25 | Earnings Available for Fixed Charges, After Provision for Income Taxes | 310,318,142 |
| 26 | | |
| 27 | Add Income Taxes | |
| 28 | a. Federal | 2,812,108 |
| 29 | b. Deferred-net | 22,205,377 |
| 30 | c. Investment Tax Credit Adjustment | |
| 31 | d. Investment Tax Credit | - |
| 32 | e. State | 142,749 |
| 33 | Earnings Available for Fixed Charges, Before Provision for Income Taxes | 335,478,376 |
| 34 | | |
| 35 | Ratio of Earnings to Fixed Charges, After Provision for Income Taxes | 2.02 |
| 36 | | |
| 37 | Ratio of Earnings to Fixed Charges, Before Provision for Income Taxes | 2.19 |

| | A | J |
|---|---|---|
| 1 | **Public Service Company of New Mexico** | |
| 2 | **Schedule G-6** | |
| 3 | **Ratio of Earnings to Fixed Charges** | |
| 4 | **Base Period Ending 6/30/2026** | |
| 5 | **Test Period Ending 9/30/2028** | |
| 6 | **This schedule is sponsored by PNM Witness Agrawal** | |
| 7 | | |
| 8 | **Description** | **Test Period Oct-27 - Sep-28** |
| 9 | | |
| 10 | | |
| 11 | Fixed charges, as defined by the Securities and Exchange Commission: | |
| 12 | a. Interest on Long-term Debt (including interest capitalized) | 141,373,992 |
| 13 | b. Amortization of Debt Premium, Discount and Expenses | 3,155,373 |
| 14 | c. Interest on Short-term Debt | 5,957,992 |
| 15 | d. Other Interest | 4,618,968 |
| 16 | e. Estimated Interest Factor of Lease Rental Charges | 953,380 |
| 17 | f. Interest Capitalized | 19,467,759 |
| 18 | Total Fixed Charges | 175,527,465 |
| 19 | | |
| 20 | Earnings, as defined by the Securities and Exchange Commission: | |
| 21 | a. Earnings After Income Taxes | 245,121,008 |
| 22 | b. Add Fixed Charges as Above | 175,527,465 |
| 23 | c. Non-controlling interest in earnings of Valencia | - |
| 24 | d. Interest Capitalized | (19,467,759) |
| 25 | Earnings Available for Fixed Charges, After Provision for Income Taxes | 401,180,714 |
| 26 | | |
| 27 | Add Income Taxes | |
| 28 | a. Federal | 2,533,215 |
| 29 | b. Deferred-net | 41,006,927 |
| 30 | c. Investment Tax Credit Adjustment | |
| 31 | d. Investment Tax Credit | - |
| 32 | e. State | 281,297 |
| 33 | Earnings Available for Fixed Charges, Before Provision for Income Taxes | 445,002,152 |
| 34 | | |
| 35 | Ratio of Earnings to Fixed Charges, After Provision for Income Taxes | 2.29 |
| 36 | | |
| 37 | Ratio of Earnings to Fixed Charges, Before Provision for Income Taxes | 2.54 |

| | A | K |
|---|---|---|
| 1 | **Public Service Company of New Mexico** | |
| 2 | **Schedule G-6** | |
| 3 | **Ratio of Earnings to Fixed Charges** | |
| 4 | **Base Period Ending 6/30/2026** | |
| 5 | **Test Period Ending 9/30/2028** | |
| 6 | **This schedule is sponsored by PNM Witness Agrawal** | |
| 7 | | |
| 8 | **Description** | **Twelve Months Jan-28 - Dec-28** |
| 9 | | |
| 10 | | |
| 11 | Fixed charges, as defined by the Securities and Exchange Commission: | |
| 12 | a. Interest on Long-term Debt (including interest capitalized) | 145,728,919 |
| 13 | b. Amortization of Debt Premium, Discount and Expenses | 3,199,797 |
| 14 | c. Interest on Short-term Debt | 5,748,173 |
| 15 | d. Other Interest | 4,557,705 |
| 16 | e. Estimated Interest Factor of Lease Rental Charges | 981,981 |
| 17 | f. Interest Capitalized | 20,418,994 |
| 18 | Total Fixed Charges | 180,635,569 |
| 19 | | |
| 20 | Earnings, as defined by the Securities and Exchange Commission: | |
| 21 | a. Earnings After Income Taxes | 263,838,252 |
| 22 | b. Add Fixed Charges as Above | 180,635,569 |
| 23 | c. Non-controlling interest in earnings of Valencia | - |
| 24 | d. Interest Capitalized | (20,418,994) |
| 25 | Earnings Available for Fixed Charges, After Provision for Income Taxes | 424,054,827 |
| 26 | | |
| 27 | Add Income Taxes | |
| 28 | a. Federal | 1,186,514 |
| 29 | b. Deferred-net | 52,902,635 |
| 30 | c. Investment Tax Credit Adjustment | |
| 31 | d. Investment Tax Credit | (8,181,002) |
| 32 | e. State | 349,386 |
| 33 | Earnings Available for Fixed Charges, Before Provision for Income Taxes | 470,312,361 |
| 34 | | |
| 35 | Ratio of Earnings to Fixed Charges, After Provision for Income Taxes | 2.35 |
| 36 | | |
| 37 | Ratio of Earnings to Fixed Charges, Before Provision for Income Taxes | 2.60 |

| | A | L |
|---|---|---|
| 1 | **Public Service Company of New Mexico** | |
| 2 | **Schedule G-6** | |
| 3 | **Ratio of Earnings to Fixed Charges** | |
| 4 | **Base Period Ending 6/30/2026** | |
| 5 | **Test Period Ending 9/30/2028** | |
| 6 | **This schedule is sponsored by PNM Witness Agrawal** | |
| 7 | | |
| 8 | **Description** | **Twelve Months Jan-29 - Dec-29** |
| 9 | | |
| 10 | | |
| 11 | Fixed charges, as defined by the Securities and Exchange Commission: | |
| 12 | a. Interest on Long-term Debt (including interest capitalized) | 158,492,572 |
| 13 | b. Amortization of Debt Premium, Discount and Expenses | 2,811,631 |
| 14 | c. Interest on Short-term Debt | 10,266,932 |
| 15 | d. Other Interest | 3,909,519 |
| 16 | e. Estimated Interest Factor of Lease Rental Charges | 1,011,441 |
| 17 | f. Interest Capitalized | 27,149,356 |
| 18 | Total Fixed Charges | 203,641,451 |
| 19 | | |
| 20 | Earnings, as defined by the Securities and Exchange Commission: | |
| 21 | a. Earnings After Income Taxes | 323,444,933 |
| 22 | b. Add Fixed Charges as Above | 203,641,451 |
| 23 | c. Non-controlling interest in earnings of Valencia | - |
| 24 | d. Interest Capitalized | (27,149,356) |
| 25 | Earnings Available for Fixed Charges, After Provision for Income Taxes | 499,937,027 |
| 26 | | |
| 27 | Add Income Taxes | |
| 28 | a. Federal | 10,304,000 |
| 29 | b. Deferred-net | 41,120,447 |
| 30 | c. Investment Tax Credit Adjustment | |
| 31 | d. Investment Tax Credit | - |
| 32 | e. State | 3,977,383 |
| 33 | Earnings Available for Fixed Charges, Before Provision for Income Taxes | 555,338,858 |
| 34 | | |
| 35 | Ratio of Earnings to Fixed Charges, After Provision for Income Taxes | 2.45 |
| 36 | | |
| 37 | Ratio of Earnings to Fixed Charges, Before Provision for Income Taxes | 2.73 |

| | A | M |
|---|---|---|
| 1 | **Public Service Company of New Mexico** | |
| 2 | **Schedule G-6** | |
| 3 | **Ratio of Earnings to Fixed Charges** | |
| 4 | **Base Period Ending 6/30/2026** | |
| 5 | **Test Period Ending 9/30/2028** | |
| 6 | **This schedule is sponsored by PNM Witness Agrawal** | |
| 7 | | |
| 8 | **Description** | **Twelve Months Jan-30 - Dec-30** |
| 9 | | |
| 10 | | |
| 11 | Fixed charges, as defined by the Securities and Exchange Commission: | |
| 12 | a. Interest on Long-term Debt (including interest capitalized) | 191,709,395 |
| 13 | b. Amortization of Debt Premium, Discount and Expenses | 2,993,090 |
| 14 | c. Interest on Short-term Debt | 5,805,088 |
| 15 | d. Other Interest | 3,664,466 |
| 16 | e. Estimated Interest Factor of Lease Rental Charges | 1,041,784 |
| 17 | f. Interest Capitalized | 12,891,425 |
| 18 | Total Fixed Charges | 218,105,248 |
| 19 | | |
| 20 | Earnings, as defined by the Securities and Exchange Commission: | |
| 21 | a. Earnings After Income Taxes | 357,099,454 |
| 22 | b. Add Fixed Charges as Above | 218,105,248 |
| 23 | c. Non-controlling interest in earnings of Valencia | - |
| 24 | d. Interest Capitalized | (12,891,425) |
| 25 | Earnings Available for Fixed Charges, After Provision for Income Taxes | 562,313,277 |
| 26 | | |
| 27 | Add Income Taxes | |
| 28 | a. Federal | 18,342,469 |
| 29 | b. Deferred-net | 37,060,440 |
| 30 | c. Investment Tax Credit Adjustment | |
| 31 | d. Investment Tax Credit | |
| 32 | e. State | 5,542,801 |
| 33 | Earnings Available for Fixed Charges, Before Provision for Income Taxes | 623,258,987 |
| 34 | | |
| 35 | Ratio of Earnings to Fixed Charges, After Provision for Income Taxes | 2.58 |
| 36 | | |
| 37 | Ratio of Earnings to Fixed Charges, Before Provision for Income Taxes | 2.86 |

| | A |
|---|---|
| 1 | **Public Service Company of New Mexico** |
| 2 | **Schedule G-6** |
| 3 | **Ratio of Earnings to Fixed Charges (Notes)** |
| 4 | **Base Period Ending 6/30/2026** |
| 5 | **Test Period Ending 9/30/2028** |
| 6 | **This schedule is sponsored by PNM Witness Agrawal** |
| 7 | |
| 8 | Base period data is historical information from the Company's Book Balance Amounts and is based on SEC filings not |
| 9 | FERC. PNM did not make adjustment to the Base Period data. The future amounts are derived from PNM's budget and |
| 10 | financial planning systems. PNM's budget and financial planning systems do not calculate a non-controlling interest in |
| 11 | earnings of Valencia, therefore it is zero for future amounts. |

# PNM Schedule G-7

Issuance restrictions on borrowed and preferred stock capital

| | A |
|---|---|
| 1 | **Public Service Company of New Mexico** |
| 2 | **Schedule G-7** |
| 3 | **Issuance Restrictions on Borrowed and Preferred Stock Capital** |
| 4 | **Base Period Ending 6/30/2026** |
| 5 | **Test Period Ending 9/30/2028** |
| 6 | **This schedule is sponsored by PNM Witness Agrawal** |
| 7 | |
| 8 | **Preferred Stock** |
| 9 | PNM's cumulative preferred shares outstanding bear dividends at 4.58% per annum. PNM preferred stock does not |
| 10 | have a mandatory redemption requirement but may be redeemed, at PNM's option, at 102% of the stated value plus |
| 11 | accrued dividends. The holders of the PNM preferred stock are entitled to payment before the holders of common |
| 12 | stock in the event of any liquidation or dissolution or distribution of assets of PNM. In addition, PNM's preferred |
| 13 | stock is not entitled to a sinking fund and cannot be converted into any other class of stock of PNM. |

# PNM Schedule G-8

Common stock equity capital

| | A | B | C | D | E | F | G |
|---|---|---|---|---|---|---|---|
| 1 | **Public Service Company of New Mexico** | | | | | | |
| 2 | **Schedule G-8** | | | | | | |
| 3 | **Common Stock Equity Capital** | | | | | | |
| 4 | **Base Period Ending 6/30/2026** | | | | | | |
| 5 | **Test Period Ending 9/30/2028** | | | | | | |
| 6 | **This schedule is sponsored by PNM Witness Agrawal** | | | | | | |
| 7 | **Period Ending** | **Number of Shares Outstanding** | **Year End Book Value Per Share** | **Annual Earnings Per Share** | **Year End Market-to-Book Value Ratio** | **Annual Cash Dividends Per Share** | **Annual Stock Dividends Per Share** |
| 8 | | | | | | | |
| 9 | 12/31/2021 | 39,117,799 | 50.10 | 3.97 | n/a | 1.53 | n/a |
| 10 | 12/31/2022 | 39,117,799 | 48.76 | 2.64 | n/a | 3.92 | n/a |
| 11 | 12/31/2023 | 39,117,799 | 49.87 | 0.91 | n/a | 0.00 | n/a |
| 12 | 12/31/2024 | 39,117,799 | 54.64 | 4.90 | n/a | 1.30 | n/a |
| 13 | 12/31/2025 | 39,117,799 | 61.29 | 2.23 | n/a | 0.00 | n/a |
| 14 | Base Period | 39,117,799 | 64.77 | 2.34 | n/a | 0.00 | n/a |
| 15 | Linkage 1 (6/30/2027) | 39,117,799 | 78.56 | 4.59 | n/a | 0.00 | n/a |
| 16 | Linkage 2 (9/30/2027) | 39,117,799 | 78.56 | 4.51 | n/a | 0.00 | n/a |
| 17 | Test Period | 39,117,799 | 82.75 | 6.27 | n/a | 0.00 | n/a |
| 18 | 12/31/2028 | 39,117,799 | 84.63 | 6.74 | n/a | 0.00 | n/a |
| 19 | 12/31/2029 | 39,117,799 | 92.19 | 8.27 | n/a | 0.00 | n/a |
| 20 | 12/31/2030 | 39,117,799 | 97.24 | 9.13 | n/a | 0.00 | n/a |

| | A | B | C | H | I | J | K | L |
|---|---|---|---|---|---|---|---|---|
| 1 | **Public Service Company of New Mexico** | | | | | | | |
| 2 | **Schedule G-8** | | | | | | | |
| 3 | **Common Stock Equity Capital** | | | | | | | |
| 4 | **Base Period Ending 6/30/2026** | | | | | | | |
| 5 | **Test Period Ending 9/30/2028** | | | | | | | |
| 6 | **This schedule is sponsored by PNM Witness Agrawal** | | | | | | | |
| 7 | **Period Ending** | **Number of Shares Outstanding** | **Year End Book Value Per Share** | **Dividend Yield Per Share** | **Average Monthly High/Low Market Price** | | | **Stock Splits and/or Changes in Par Value** |
| 8 | | | | | | | | |
| 9 | 12/31/2021 | 39,117,799 | 50.10 | n/a | n/a | / | n/a | n/a |
| 10 | 12/31/2022 | 39,117,799 | 48.76 | n/a | n/a | / | n/a | n/a |
| 11 | 12/31/2023 | 39,117,799 | 49.87 | n/a | n/a | / | n/a | n/a |
| 12 | 12/31/2024 | 39,117,799 | 54.64 | n/a | n/a | / | n/a | n/a |
| 13 | 12/31/2025 | 39,117,799 | 61.29 | n/a | n/a | / | n/a | n/a |
| 14 | Base Period | 39,117,799 | 64.77 | n/a | n/a | / | n/a | n/a |
| 15 | Linkage 1 (6/30/2027) | 39,117,799 | 78.56 | n/a | n/a | / | n/a | n/a |
| 16 | Linkage 2 (9/30/2027) | 39,117,799 | 78.56 | n/a | n/a | / | n/a | n/a |
| 17 | Test Period | 39,117,799 | 82.75 | n/a | n/a | / | n/a | n/a |
| 18 | 12/31/2028 | 39,117,799 | 84.63 | n/a | n/a | / | n/a | n/a |
| 19 | 12/31/2029 | 39,117,799 | 92.19 | n/a | n/a | / | n/a | n/a |
| 20 | 12/31/2030 | 39,117,799 | 97.24 | n/a | n/a | / | n/a | n/a |

| | A | B | C | M | N | O | P |
|---|---|---|---|---|---|---|---|
| 1 | **Public Service Company of New Mexico** | | | | | | |
| 2 | **Schedule G-8** | | | | | | |
| 3 | **Common Stock Equity Capital** | | | | | | |
| 4 | **Base Period Ending 6/30/2026** | | | | | | |
| 5 | **Test Period Ending 9/30/2028** | | | | | | |
| 6 | **This schedule is sponsored by PNM Witness Agrawal** | | | | | | |
| 7 | **Period Ending** | **Number of Shares Outstanding** | **Year End Book Value Per Share** | **Sales of Common Stock** | **Date of Sale** | **Number of Shares Sold** | **Gross Proceeds** |
| 8 | | | | | | | |
| 9 | 12/31/2021 | 39,117,799 | 50.10 | n/a | n/a | n/a | n/a |
| 10 | 12/31/2022 | 39,117,799 | 48.76 | n/a | n/a | n/a | n/a |
| 11 | 12/31/2023 | 39,117,799 | 49.87 | n/a | n/a | n/a | n/a |
| 12 | 12/31/2024 | 39,117,799 | 54.64 | n/a | n/a | n/a | n/a |
| 13 | 12/31/2025 | 39,117,799 | 61.29 | n/a | n/a | n/a | n/a |
| 14 | Base Period | 39,117,799 | 64.77 | n/a | n/a | n/a | n/a |
| 15 | Linkage 1 (6/30/2027) | 39,117,799 | 78.56 | n/a | n/a | n/a | n/a |
| 16 | Linkage 2 (9/30/2027) | 39,117,799 | 78.56 | n/a | n/a | n/a | n/a |
| 17 | Test Period | 39,117,799 | 82.75 | n/a | n/a | n/a | n/a |
| 18 | 12/31/2028 | 39,117,799 | 84.63 | n/a | n/a | n/a | n/a |
| 19 | 12/31/2029 | 39,117,799 | 92.19 | n/a | n/a | n/a | n/a |
| 20 | 12/31/2030 | 39,117,799 | 97.24 | n/a | n/a | n/a | n/a |

| | A | B | C | Q | R | S | T |
|---|---|---|---|---|---|---|---|
| 1 | **Public Service Company of New Mexico** | | | | | | |
| 2 | **Schedule G-8** | | | | | | |
| 3 | **Common Stock Equity Capital** | | | | | | |
| 4 | **Base Period Ending 6/30/2026** | | | | | | |
| 5 | **Test Period Ending 9/30/2028** | | | | | | |
| 6 | **This schedule is sponsored by PNM Witness Agrawal** | | | | | | |
| 7 | **Period Ending** | **Number of Shares Outstanding** | **Year End Book Value Per Share** | **Underwriter Commission, Discount, or Premium** | **Issuance Expense** | **Type of Offering** | **Reference** |
| 8 | | | | | | | |
| 9 | 12/31/2021 | 39,117,799 | 50.10 | n/a | n/a | n/a | |
| 10 | 12/31/2022 | 39,117,799 | 48.76 | n/a | n/a | n/a | |
| 11 | 12/31/2023 | 39,117,799 | 49.87 | n/a | n/a | n/a | |
| 12 | 12/31/2024 | 39,117,799 | 54.64 | n/a | n/a | n/a | |
| 13 | 12/31/2025 | 39,117,799 | 61.29 | n/a | n/a | n/a | |
| 14 | Base Period | 39,117,799 | 64.77 | n/a | n/a | n/a | |
| 15 | Linkage 1 (6/30/2027) | 39,117,799 | 78.56 | n/a | n/a | n/a | |
| 16 | Linkage 2 (9/30/2027) | 39,117,799 | 78.56 | n/a | n/a | n/a | |
| 17 | Test Period | 39,117,799 | 82.75 | n/a | n/a | n/a | |
| 18 | 12/31/2028 | 39,117,799 | 84.63 | n/a | n/a | n/a | |
| 19 | 12/31/2029 | 39,117,799 | 92.19 | n/a | n/a | n/a | |
| 20 | 12/31/2030 | 39,117,799 | 97.24 | n/a | n/a | n/a | |

| | A |
|---|---|
| 1 | **Public Service Company of New Mexico** |
| 2 | **Schedule G-8** |
| 3 | **Common Stock Equity Capital (Notes)** |
| 4 | **Base Period Ending 6/30/2026** |
| 5 | **Test Period Ending 9/30/2028** |
| 6 | **This schedule is sponsored by PNM Witness Agrawal** |
| 7 | |
| 8 | In 2001, PNM stock was exchanged with PNM Resources, Inc. PNM stock is not publicly traded and information |
| 9 | regarding common stock activity is not applicable. |
| 10 | Annual Earnings Per Share are calculated for this schedule only and do not compare to the EPS calculated for SEC |
| 11 | purposes as PNM stock is not publicly traded. |
| 12 | Base period data is historical information from the Company's Book Balance Amounts |
| 13 | Please refer to Direct Testimony of PNM Witness Agrawal for discussion of adjustments/changes. |
| 14 | Amounts may not foot due to rounding. |

# PNM Schedule G-9

Historical activity in common stock, paid-in capital, and retained earnings

| | A | B | C | D | E | F | G |
|---|---|---|---|---|---|---|---|
| 1 | **Public Service Company of New Mexico** | | | | | | |
| 2 | **Schedule G-9** | | | | | | |
| 3 | **Historical Activity in Common Stock,** | | | | | | |
| 4 | **Paid-In Capital and Retained Earnings** | | | | | | |
| 5 | **(in thousands)** | | | | | | |
| 6 | **Base Period Ending 6/30/2026** | | | | | | |
| 7 | **Test Period Ending 9/30/2028** | | | | | | |
| 8 | **This schedule is sponsored by** | | | | | | |
| 9 | **PNM Witness Agrawal** | | | | | | |
| 10 | | | | | | | |
| 11 | **Description** | **Twelve Months 12/31/2016** | **Twelve Months 12/31/2017** | **Twelve Months 12/31/2018** | **Twelve Months 12/31/2019** | **Twelve Months 12/31/2020** | **Twelve Months 12/31/2021** |
| 12 | | | | | | | |
| 13 | Common Stock | | | | | | |
| 14 | Beginning Balance | 195,589 | 195,589 | 195,589 | 195,589 | 195,589 | 195,589 |
| 15 | Additions | - | - | - | - | - | - |
| 16 | Reductions | - | - | - | - | - | - |
| 17 | Ending Balance | 195,589 | 195,589 | 195,589 | 195,589 | 195,589 | 195,589 |
| 18 | | | | | | | |
| 19 | Paid-in-Capital | | | | | | |
| 20 | Beginning Balance | 1,041,187 | 1,069,329 | 1,069,329 | 1,069,329 | 1,069,329 | 1,299,329 |
| 21 | Additions | 28,142 | - | - | - | 230,000 | 53,000 |
| 22 | Reductions | - | - | - | - | - | - |
| 23 | Ending Balance | 1,069,329 | 1,069,329 | 1,069,329 | 1,069,329 | 1,299,329 | 1,352,329 |
| 24 | | | | | | | |
| 25 | Accumulated Other Comprehensive | | | | | | |
| 26 | Income (Net of Tax) | | | | | | |
| 27 | Beginning Balance | (71,476) | (92,428) | (108,301) | (110,422) | (99,055) | (78,511) |
| 28 | Additions | 22,140 | 45,046 | 14,965 | 37,673 | 39,447 | 23,417 |
| 29 | Reductions | (43,092) | (60,919) | (17,086) | (26,306) | (18,903) | (16,842) |
| 30 | Ending Balance | (92,428) | (108,301) | (110,422) | (99,055) | (78,511) | (71,936) |
| 31 | | | | | | | |
| 32 | Retained Earnings/(Deficit) | | | | | | |
| 33 | Beginning Balance | 152,633 | 225,382 | 254,349 | 242,863 | 283,516 | 388,336 |
| 34 | Additions | 76,891 | 89,662 | 65,891 | 40,653 | 145,473 | 155,541 |
| 35 | Reductions | (4,142) | (60,695) | (77,377) | - | (40,653) | (60,000) |
| 36 | Ending Balance | 225,382 | 254,349 | 242,863 | 283,516 | 388,336 | 483,877 |

| | A | H | I | J | K | L | M |
|---|---|---|---|---|---|---|---|
| 1 | **Public Service Company of New Mexico** | | | | | | |
| 2 | **Schedule G-9** | | | | | | |
| 3 | **Historical Activity in Common Stock,** | | | | | | |
| 4 | **Paid-In Capital and Retained Earnings** | | | | | | |
| 5 | **(in thousands)** | | | | | | |
| 6 | **Base Period Ending 6/30/2026** | | | | | | |
| 7 | **Test Period Ending 9/30/2028** | | | | | | |
| 8 | **This schedule is sponsored by** | | | | | | |
| 9 | **PNM Witness Agrawal** | | | | | | |
| 10 | | | | | | | |
| 11 | **Description** | **Twelve Months 12/31/2022** | **Twelve Months 12/31/2023** | **Twelve Months 12/31/2024** | **Twelve Months 12/31/2025** | **Base Year Ending 6/30/2026** | **Linkage Ending 9/30/2027** |
| 12 | | | | | | | |
| 13 | Common Stock | | | | | | |
| 14 | Beginning Balance | 195,589 | 195,589 | 195,589 | 195,589 | 195,589 | 195,589 |
| 15 | Additions | - | - | - | - | - | - |
| 16 | Reductions | - | - | - | - | - | - |
| 17 | Ending Balance | 195,589 | 195,589 | 195,589 | 195,589 | 195,589 | 195,589 |
| 18 | | | | | | | |
| 19 | Paid-in-Capital | | | | | | |
| 20 | Beginning Balance | 1,352,329 | 1,352,329 | 1,352,329 | 1,407,329 | 1,407,329 | 1,635,629 |
| 21 | Additions | - | - | 55,000 | 123,300 | 228,300 | 244,734 |
| 22 | Reductions | - | - | - | - | - | - |
| 23 | Ending Balance | 1,352,329 | 1,352,329 | 1,407,329 | 1,530,629 | 1,635,629 | 1,880,363 |
| 24 | | | | | | | |
| 25 | Accumulated Other Comprehensive | | | | | | |
| 26 | Income (Net of Tax) | | | | | | |
| 27 | Beginning Balance | (71,936) | (74,335) | (66,505) | (75,708) | (73,533) | (24,766) |
| 28 | Additions | 9,725 | 19,522 | 9,236 | 68,015 | 66,253 | - |
| 29 | Reductions | (12,124) | (11,692) | (18,439) | (18,010) | (17,486) | - |
| 30 | Ending Balance | (74,335) | (66,505) | (75,708) | (25,703) | (24,766) | (24,766) |
| 31 | | | | | | | |
| 32 | Retained Earnings/(Deficit) | | | | | | |
| 33 | Beginning Balance | 483,877 | 433,747 | 469,404 | 610,088 | 635,395 | 727,049 |
| 34 | Additions | 103,371 | 35,657 | 191,684 | 87,077 | 91,654 | 295,045 |
| 35 | Reductions | (153,501) | - | (51,000) | - | - | - |
| 36 | Ending Balance | 433,747 | 469,404 | 610,088 | 697,165 | 727,049 | 1,022,094 |

| | A | N | O | P | Q | R |
|---|---|---|---|---|---|---|
| 1 | **Public Service Company of New Mexico** | | | | | |
| 2 | **Schedule G-9** | | | | | |
| 3 | **Historical Activity in Common Stock,** | | | | | |
| 4 | **Paid-In Capital and Retained Earnings** | | | | | |
| 5 | **(in thousands)** | | | | | |
| 6 | **Base Period Ending 6/30/2026** | | | | | |
| 7 | **Test Period Ending 9/30/2028** | | | | | |
| 8 | **This schedule is sponsored by** | | | | | |
| 9 | **PNM Witness Agrawal** | | | | | |
| 10 | | | | | | |
| 11 | **Description** | **Test Period Ending 9/30/2028** | **Twelve Months 12/31/2028** | **Twelve Months 12/31/2029** | **Twelve Months 12/31/2030** | **Reference** |
| 12 | | | | | | |
| 13 | Common Stock | | | | | |
| 14 | Beginning Balance | 195,589 | 195,589 | 195,589 | 195,589 | |
| 15 | Additions | - | - | - | - | |
| 16 | Reductions | - | - | - | - | |
| 17 | Ending Balance | 195,589 | 195,589 | 195,589 | 195,589 | |
| 18 | | | | | | |
| 19 | Paid-in-Capital | | | | | |
| 20 | Beginning Balance | 1,880,363 | 1,798,780 | 1,824,978 | 1,797,328 | |
| 21 | Additions | | 26,198 | | | |
| 22 | Reductions | (81,583) | | (27,650) | (159,391) | |
| 23 | Ending Balance | 1,798,780 | 1,824,978 | 1,797,328 | 1,637,938 | |
| 24 | | | | | | |
| 25 | Accumulated Other Comprehensive | | | | | |
| 26 | Income (Net of Tax) | | | | | |
| 27 | Beginning Balance | (24,766) | (24,766) | (24,766) | (24,766) | |
| 28 | Additions | - | - | - | - | |
| 29 | Reductions | - | - | - | - | |
| 30 | Ending Balance | (24,766) | (24,766) | (24,766) | (24,766) | |
| 31 | | | | | | |
| 32 | Retained Earnings/(Deficit) | | | | | |
| 33 | Beginning Balance | 1,022,094 | 1,050,846 | 1,314,684 | 1,638,129 | |
| 34 | Additions | 245,121 | 263,838 | 323,445 | 357,099 | |
| 35 | Reductions | - | - | - | - | |
| 36 | Ending Balance | 1,267,215 | 1,314,684 | 1,638,129 | 1,995,228 | |

| | A |
|---|---|
| 1 | **Public Service Company of New Mexico** |
| 2 | **Schedule G-9** |
| 3 | **Historical Activity in Common Stock,** |
| 4 | **Paid-In Capital and Retained Earnings (in thousands)** |
| 5 | **Base Period Ending 6/30/2026** |
| 6 | **Test Period Ending 9/30/2028** |
| 7 | **This schedule is sponsored by PNM Witness Agrawal** |
| 8 | |
| 9 | Historical information is based on the Company's Books and Records |
| 10 | PNM did not make adjustment to the Base Period data. The future amounts are derived from PNM's budget and |
| 11 | financial planning systems. |
| 12 | Amounts in Schedule G-9 are in thousands. |
| 13 | Base period data is historical information from the Company's Book Balance Amounts |

# PNM Schedule G-10

Summary of applicant's support for the claimed rate of return on common stock equity capital

| | A |
|---|---|
| 1 | **Public Service Company of New Mexico** |
| 2 | **Schedule G-10** |
| 3 | **Summary of Applicants Support for the Claimed Rate of Return on Common Stock Equity Capital** |
| 4 | **Base Period Ending 6/30/2026** |
| 5 | **Test Period Ending 9/30/2028** |
| 6 | **This schedule is sponsored by PNM Witness McKenzie** |
| 7 | |
| 8 | PNM's 9.45% required return on common stock equity for the base period is based upon the return in the final |
| 9 | order of PNM Rate Case 24-00089-UT. |
| 10 | |
| 11 | PNM's required return on common stock equity for the future test period is based upon the analyses and the |
| 12 | Direct Testimony of McKenzie (See Schedules G-1 and A-5). |

Expenses of operation

# PNM H Series Schedules

Schedule H-1: Operation and maintenance expenses

Schedule H-2: Cost of fuel

Schedule H-3: Revenue generated through the fuel adjustment clause

Schedule H-4: Payroll distribution and associated payroll taxes

Schedule H-5: Expenses associated with advertising, contributions, donations, lobbying and political activities, memberships, and outside services

Schedule H-6: Other administrative and general expenses

Schedule H-7: Depreciation and amortization expense

Schedule H-8: Taxes other than income taxes

Schedule H-9: Federal and state income taxes

Schedule H-10: Reconciliation of net income per books to net income for income tax purposes

Schedule H-11: Income tax effect as result of applicant joining in a consolidated federal income tax return

Schedule H-12: Accumulated tax deferrals

Schedule H-13: Investment tax credits

Schedule H-14: Expenses associated with affiliated interests

Schedule H-15: Expenses associated with non-utility services

Schedule H-16: Explanation of the adjustments to expenses of operation

# PNM Schedule H-1

Operation and maintenance expenses

| | A | B | C | D | E | F |
|---|---|---|---|---|---|---|
| 1 | **PNM Exhibit RNG-4** | | | | | |
| 2 | **Schedule H-1** | | | | | |
| 3 | **Summary of Operations and Maintenance Expense** | | | | | |
| 4 | **Base Period Ending 6/30/2026** | | | | | |
| 5 | **Test Period Ending 9/30/2028** | | | | | |
| 6 | O&M Model Lead Sheet | | | | | |
| 7 | | | | | **PNM Exhibit RNG-3 WP COS; COS BASE Col G** | |
| 8 | **Description** | **Total Company Unadjusted Base Period** | **Total Company COS Reclassification Adjustments** | **Base Period Adjustments** | **Adjusted Base Period** | **Reference** |
| 9 | | | | | | |
| 10 | **Operations and Maintenance Expense** | | | | | |
| 11 | | | | | | |
| 12 | Production O&M, excluding Base Fuel | 95,138,279 | - | 1,851,966 | 96,990,246 | |
| 13 | Base Fuel, Net of Off-System Sales | 223,905,330 | - | (38,902,755) | 185,002,575 | |
| 14 | Production O&M, Fuel Related | 238,212,522 | - | (119,253,315) | 118,959,206 | |
| 15 | Total Production O&M | 557,256,130 | - | (156,304,104) | 400,952,026 | |
| 16 | | | | | | |
| 17 | Energy Storage O&M | 81,288 | - | (1,117) | 80,171 | |
| 18 | | | | | | |
| 19 | Transmission O&M | 56,122,837 | - | 9,482,419 | 65,605,256 | |
| 20 | | | | | | |
| 21 | Distribution O&M | 37,468,475 | - | 2,406,144 | 39,874,619 | |
| 22 | | | | | | |
| 23 | Customer Accounts | 25,566,793 | - | 572,584 | 26,139,377 | |
| 24 | | | | | | |
| 25 | Customer Service and Info | 1,545,820 | - | (205,360) | 1,340,461 | |
| 26 | | | | | | |
| 27 | Sales | 5,042,201 | - | 300,985 | 5,343,186 | |
| 28 | | | | | | |
| 29 | Administration and General | 269,002,091 | - | (166,343,249) | 102,658,842 | |
| 30 | | | | | | |
| 31 | O&M, Excluding Base Fuel | 728,180,306 | - | (271,188,943) | 456,991,363 | PNM Exhibit RNG-3 WP COS; COS BASE, Column G, line 444 |
| 32 | Base Fuel, Net Off-System Sales | 223,905,330 | - | (38,902,755) | 185,002,575 | PNM Exhibit RNG-3 WP COS; COS BASE, Column G, line 276 |
| 33 | Total O&M | 952,085,636 | - | (310,091,698) | 641,993,938 | |
| 34 | | | | | | |
| 35 | | | | | | |
| 36 | Notes: | | | | | |
| 37 | Base Period Data is historical information from the Company's Books and Records. | | | | | |
| 38 | Please refer to PNM Witness Gutierrez for adjustments / changes to base period | | | | | |
| 39 | | | | | | |
| 40 | This schedule is sponsored by PNM Witness Gutierrez | | | | | |

| | A | G | H | I | J | K |
|---|---|---|---|---|---|---|
| 1 | **PNM Exhibit RNG-4** | | | | | |
| 2 | **Schedule H-1** | | | | | |
| 3 | **Summary of Operations and Maintenance Expense** | | | | | |
| 4 | **Base Period Ending 6/30/2026** | | | | | |
| 5 | **Test Period Ending 9/30/2028** | | | | | |
| 6 | O&M Model Lead Sheet | | | | | |
| 7 | | | | **PNM Exhibit RNG-3 WP COS; COS TEST Col G** | | |
| 8 | **Description** | **Linkage Period One 7/1/2026 - 6/30/2027** | **Linkage Period Two 10/1/2026 - 9/30/2027** | **Total Company Test Period** | **Adjusted Base and Test Periods Variance** | **Reference** |
| 9 | | | | | | |
| 10 | **Operations and Maintenance Expense** | | | | | |
| 11 | | | | | | |
| 12 | Production O&M, excluding Base Fuel | 99,539,374 | 99,677,800 | 103,645,590 | 6,655,345 | |
| 13 | Base Fuel, Net of Off-System Sales | 169,405,072 | 165,059,568 | 167,693,874 | (17,308,701) | |
| 14 | Production O&M, Fuel Related | 111,189,424 | 115,995,824 | 173,414,307 | 54,455,101 | |
| 15 | Total Production O&M | 380,133,870 | 380,733,192 | 444,753,771 | 43,801,745 | |
| 16 | | | | | | |
| 17 | Energy Storage O&M | 82,338 | 82,457 | 1,803,213 | 1,723,042 | |
| 18 | | | | | | |
| 19 | Transmission O&M | 68,116,449 | 68,501,960 | 73,989,667 | 8,384,412 | |
| 20 | | | | | | |
| 21 | Distribution O&M | 40,605,181 | 40,856,810 | 71,956,180 | 32,081,561 | |
| 22 | | | | | | |
| 23 | Customer Accounts | 26,686,645 | 26,805,102 | 31,130,091 | 4,990,713 | |
| 24 | | | | | | |
| 25 | Customer Service and Info | 1,361,493 | 1,371,083 | 1,421,999 | 81,538 | |
| 26 | | | | | | |
| 27 | Sales | 5,412,268 | 5,457,875 | 5,668,130 | 324,944 | |
| 28 | | | | | | |
| 29 | Administration and General | 100,976,705 | 102,914,896 | 118,245,449 | 15,586,607 | |
| 30 | | | | | | |
| 31 | O&M, Excluding Base Fuel | 453,969,877 | 461,663,809 | 581,274,626 | 124,283,263 | PNM Exhibit RNG-3 WP COS; COS TEST Column G, line 442 |
| 32 | Base Fuel, Net Off-System Sales | 169,405,072 | 165,059,568 | 167,693,874 | (17,308,701) | PNM Exhibit RNG-3 WP COS; COS TEST Column G, line 276 |
| 33 | Total O&M | 623,374,949 | 626,723,377 | 748,968,500 | 106,974,562 | |
| 34 | | | | | | |
| 35 | | | | | | |
| 36 | Notes: | | | | | |
| 37 | Base Period Data is historical information from the Company's Books and Records. | | | | | |
| 38 | Please refer to PNM Witness Gutierrez for adjustments / changes to base period | | | | | |
| 39 | | | | | | |
| 40 | This schedule is sponsored by PNM Witness Gutierrez | | | | | |

| | A | B | C | D | E | F |
|---|---|---|---|---|---|---|
| 1 | **PNM Exhibit RNG-4** | | | | | |
| 2 | **Schedule H-1** | | | | | |
| 3 | **Operations and Maintenance Expense** | | | | | |
| 4 | **Base Period Ending 6/30/2026** | | | | | |
| 5 | **Test Period Ending 9/30/2028** | | | | | |
| 6 | **Base Period data is historical information from the Company's Books and Records** | | | | | |
| 7 | O&M Model Lead Sheet | | | | | |
| 8 | | | | | | |
| 9 | **Descriptions** | **FERC** | **Jul-25** | **Aug-25** | **Sep-25** | **Oct-25** |
| 10 | Non-Fuel Production O&M | | | | | |
| 11 | Steam Production Operation | | | | | |
| 12 | Total Operation Supervision and Engineering | 500 | 150,174 | 15,827 | 476,103 | 82,513 |
| 13 | Total Steam Expenses | 502 | 262,433 | 1,172,313 | 559,513 | 564,529 |
| 14 | Total Steam from Other Sources | 503 | - | - | - | - |
| 15 | Total Electric Expenses | 505 | 127,680 | 129,993 | 100,712 | 94,863 |
| 16 | Total Misc. Steam Power Expenses | 506 | 130,354 | 134,529 | 185,668 | 201,164 |
| 17 | Total Rents | 507 | 18,707 | 18,668 | 18,668 | 18,666 |
| 18 | Total Steam Production Expense | | 689,348 | 1,471,329 | 1,340,664 | 961,735 |
| 19 | | | | | | |
| 20 | Steam Production Maintenance | | | | | |
| 21 | Total Maintenance Supervision and Engineering | 510 | 112,716 | 33,434 | 53,585 | 58,780 |
| 22 | Total Maintenance of Structures | 511 | 175,321 | 255,231 | 263,625 | 61,687 |
| 23 | Total Maintenance of Boiler Plant | 512 | 364,281 | 760,216 | 72,742 | 606,124 |
| 24 | Total Maintenance of Electric Plant | 513 | 574,454 | (281,814) | 32,262 | 130,108 |
| 25 | Total Maintenance of Misc. Electric Plant | 514 | 151,810 | 37,034 | 30,415 | 186,214 |
| 26 | Total Steam Production Maintenance Subtotal | | 1,378,582 | 804,100 | 452,629 | 1,042,912 |
| 27 | | | | | | |
| 28 | Total Steam Production O&M | | 2,067,930 | 2,275,430 | 1,793,293 | 2,004,647 |
| 29 | | | | | | |

| | A | B | C | D | E | F |
|---|---|---|---|---|---|---|
| 1 | **PNM Exhibit RNG-4** | | | | | |
| 2 | **Schedule H-1** | | | | | |
| 3 | **Operations and Maintenance Expense** | | | | | |
| 4 | **Base Period Ending 6/30/2026** | | | | | |
| 5 | **Test Period Ending 9/30/2028** | | | | | |
| 6 | **Base Period data is historical information from the Company's Books and Records** | | | | | |
| 7 | O&M Model Lead Sheet | | | | | |
| 8 | | | | | | |
| 9 | **Descriptions** | **FERC** | **Jul-25** | **Aug-25** | **Sep-25** | **Oct-25** |
| 30 | Nuclear Production Operation | | | | | |
| 31 | Total Operation Supervision and Engineering | 517 | 549,369 | 732,186 | 636,830 | 715,434 |
| 32 | Total Coolants and Water | 519 | 518,261 | 465,327 | 502,026 | 484,109 |
| 33 | Total Steam Expenses | 520 | 188,486 | 253,246 | 192,859 | 437,232 |
| 34 | Total Electric Expenses | 523 | 224,624 | 284,986 | 295,955 | 351,917 |
| 35 | Total Misc. Nuclear Power Expenses, excluding PV 1&2 Decommissioning and CE Credit | 524 | 1,026,969 | 651,097 | 939,582 | 543,194 |
| 36 | Total Misc. Nuclear Power Expenses - PV 1&2 Decommissioning and CE Credit | 524 | - | - | - | - |
| 37 | Total Rents - Nuclear, excluding PV 1&2 Prudency Audit and Excess Gain Amortization | 525 | 9,186 | 9,186 | 9,379 | 8,458 |
| 38 | Total Rents-Nuclear - PV 1&2 Prudency Audit | 525 | - | - | - | - |
| 39 | Total Rents-Nuclear - PV 1&2 Excess Gain Amortization | 525 | (3,319) | (3,319) | (3,319) | (3,319) |
| 40 | Total Nuclear Production Operation | | 2,513,577 | 2,392,709 | 2,573,312 | 2,537,025 |
| 41 | | | | | | |
| 42 | Nuclear Production Maintenance | | | | | |
| 43 | Total Maintenance Supervision and Engineering | 528 | 33,767 | 25,502 | 24,131 | 538,093 |
| 44 | Total Maintenance of Structures | 529 | 44,795 | 66,292 | 51,431 | 97,455 |
| 45 | Total Maintenance of Reactor Plant | 530 | 198,408 | 157,879 | 295,663 | 124,884 |
| 46 | Total Maintenance of Electric Plant | 531 | 251,554 | 429,560 | 188,604 | 1,156,506 |
| 47 | Total Maintenance of Misc. Nuclear Plant | 532 | 50,349 | 84,500 | (14,841) | 175,853 |
| 48 | Palo Verde 3 - Nuclear Production | 517,519-556 | - | - | - | - |
| 49 | Total Nuclear Production Maintenance | | 578,873 | 763,732 | 544,989 | 2,092,791 |
| 50 | | | | | | |
| 51 | Total Nuclear Production O&M | | 3,092,450 | 3,156,441 | 3,118,300 | 4,629,816 |

| | A | B | C | D | E | F |
|---|---|---|---|---|---|---|
| 1 | **PNM Exhibit RNG-4** | | | | | |
| 2 | **Schedule H-1** | | | | | |
| 3 | **Operations and Maintenance Expense** | | | | | |
| 4 | **Base Period Ending 6/30/2026** | | | | | |
| 5 | **Test Period Ending 9/30/2028** | | | | | |
| 6 | **Base Period data is historical information from the Company's Books and Records** | | | | | |
| 7 | O&M Model Lead Sheet | | | | | |
| 8 | | | | | | |
| 9 | **Descriptions** | **FERC** | **Jul-25** | **Aug-25** | **Sep-25** | **Oct-25** |
| 52 | | | | | | |
| 53 | Other Production Operation | | | | | |
| 54 | Total Operation Supervision and Engineering | 546 | 306,728 | 322,651 | 255,026 | 284,052 |
| 55 | Total Misc. Other Power Expenses | 549 | 4,087 | (10,132) | 1,625 | 2,136 |
| 56 | Total Misc. Other Power Expenses-Renew | 549-Renew | - | - | - | - |
| 57 | Total Other Production Operation | | 310,815 | 312,519 | 256,650 | 286,189 |
| 58 | | | | | | |
| 59 | Other Production Maintenance | | | | | |
| 60 | Total Maintenance of Structures | 552 | 95,207 | 117,467 | 75,704 | 191,413 |
| 61 | Total Maintenance of Gen and Electric Plant | 553 | 588,071 | 524,626 | 685,213 | 1,005,950 |
| 62 | Total Maintenance of Gen and Electric Plant-Renew | 553-Renew | - | - | - | - |
| 63 | Total System Control and Load Dispatching | 556 | 600,135 | 379,668 | 544,330 | 567,875 |
| 64 | Total Other Production Maintenance | | 1,283,413 | 1,021,761 | 1,305,247 | 1,765,238 |
| 65 | | | | | | |
| 66 | Total Other Production O&M | | 1,594,228 | 1,334,280 | 1,561,897 | 2,051,426 |
| 67 | | | | | | |
| 68 | Solar Production Operations and Maintenance | | | | | |
| 69 | Total Generation & Plant OpEx-Solar | 558.2 | 6,046 | 6,828 | 4,404 | 62,541 |
| 70 | Total Generation & Plant OpEx-Solar - Renewables | 558.2 Renew | 45,220 | 49,928 | 343,953 | 191,445 |
| 71 | Total Maintenance -Solar Panels, Structures, & Equipment | 558.7 | - | - | 117,166 | - |
| 72 | Total Maintenance -Solar Panels, Structures, & Equipment - Energy Storage Transmission | 558.7 Energy Storage Tran | - | - | - | - |
| 73 | Total Maintenance -Solar Panels, Structures, & Equipment - Battery Storage | 558.7 Energy Storage Dist | 1,445 | - | - | 875 |
| 74 | Total Maintenance -Solar Panels, Structures, & Equipment - Battery | 558.7 Renew | - | - | 289,350 | - |
| 75 | Total Solar Production O&M | | 52,711 | 56,756 | 754,873 | 254,860 |
| 76 | | | | | | |
| 77 | Total Non-Fuel Production O&M | | 6,807,319 | 6,822,907 | 7,228,364 | 8,940,749 |
| 78 | | | | | | |
| 79 | Energy Storage Operations and Maintenance | | | | | |
| 80 | Total Maintenance-Storage Eqp, Struc Total- Energy Storage | 578.2 | - | - | - | - |
| 81 | Maintenance-Storage Eqp, Struc Total - Energy Storage Transmission | 578.2-Energy Storage Tran | - | - | - | - |
| 82 | Maintenance-Storage Eqp, Struc Total - Energy Storage Distribution | 578.2-Energy Storage Dist. | 3,231 | 10,437 | 570 | 145 |
| 83 | Total Energy Storage Operations and Maintenance | | 3,231 | 10,437 | 570 | 145 |
| 84 | | | | | | |

| | A | B | C | D | E | F |
|---|---|---|---|---|---|---|
| 1 | **PNM Exhibit RNG-4** | | | | | |
| 2 | **Schedule H-1** | | | | | |
| 3 | **Operations and Maintenance Expense** | | | | | |
| 4 | **Base Period Ending 6/30/2026** | | | | | |
| 5 | **Test Period Ending 9/30/2028** | | | | | |
| 6 | **Base Period data is historical information from the Company's Books and Records** | | | | | |
| 7 | O&M Model Lead Sheet | | | | | |
| 8 | | | | | | |
| 9 | **Descriptions** | **FERC** | **Jul-25** | **Aug-25** | **Sep-25** | **Oct-25** |
| 85 | Fuel Production O&M | | | | | |
| 86 | Coal Fuel Burn | 501 | 5,000,148 | 4,847,628 | 3,845,841 | 3,539,670 |
| 87 | Steam Fuel Handling and Disposal | 501 | 228,296 | 110,626 | 148,351 | 187,070 |
| 88 | Tot Nuclear Fuel Exp | 518 | 1,471,186 | 1,471,283 | 1,418,210 | 962,560 |
| 89 | Total Nuclear Disposal | 518 | 313,933 | 313,130 | 86,172 | 183,476 |
| 90 | Total Gas Generation | 547 | 3,448,323 | 3,014,324 | 490,224 | 31,537 |
| 91 | Wind PPAs | 555 | 1,540,264 | 1,731,841 | 287,455 | 2,228,262 |
| 92 | Geothermal PPA | 555 | 532,290 | 501,865 | 477,086 | 649,348 |
| 93 | Total Purchased Power Energy | 555 | 28,538,928 | 34,363,746 | 16,422,662 | 18,122,348 |
| 94 | Spinning Reserves | 555 | - | - | - | - |
| 95 | ESA Fuel Reclass | 555 | - | - | - | - |
| 96 | Total Fuel Production O&M | | 41,073,368 | 46,354,443 | 23,176,001 | 25,904,271 |
| 97 | | | | | | |
| 98 | Off-system Sales | 447.3 | (9,327,053) | (9,771,344) | (7,375,958) | (7,716,865) |
| 99 | Off-system Sales - Other | | - | - | - | - |
| 100 | Physical Sales of Gas (under FAC hedge plan) | 447.7 | - | - | - | - |
| 101 | EDAM | 456.1 | - | - | - | - |
| 102 | Short Term PTP and Transmission Service | 456.1 | - | - | - | - |
| 103 | Total Other Fuel | | (9,327,053) | (9,771,344) | (7,375,958) | (7,716,865) |

| | A | B | C | D | E | F |
|---|---|---|---|---|---|---|
| 1 | **PNM Exhibit RNG-4** | | | | | |
| 2 | **Schedule H-1** | | | | | |
| 3 | **Operations and Maintenance Expense** | | | | | |
| 4 | **Base Period Ending 6/30/2026** | | | | | |
| 5 | **Test Period Ending 9/30/2028** | | | | | |
| 6 | **Base Period data is historical information from the Company's Books and Records** | | | | | |
| 7 | O&M Model Lead Sheet | | | | | |
| 8 | | | | | | |
| 9 | **Descriptions** | **FERC** | **Jul-25** | **Aug-25** | **Sep-25** | **Oct-25** |
| 104 | | | | | | |
| 105 | Other Production - Fuel Related | | | | | |
| 106 | Gas Plants Fuel Transportation | 547 | 1,072,275 | 991,569 | 984,260 | 1,189,285 |
| 107 | Gas PPA - Valencia - Demand | 555 | 1,724,273 | 1,733,543 | 1,716,207 | 1,677,006 |
| 108 | Energy Storage Agreement - Demand | 555 | 5,339,145 | 5,144,381 | 5,241,763 | 5,241,763 |
| 109 | Purchase power for Economy Service Customer | 555 | 2,239,461 | 1,074,785 | 1,703,961 | 1,188,309 |
| 110 | Purchased power for Rate 36B | 555 | 5,148,802 | 5,418,944 | 5,314,675 | 5,473,730 |
| 111 | FPPCAC deferral | 501.1,555.4 | (4,187,246) | (8,917,589) | 9,000,321 | 9,652,627 |
| 112 | Rec Purchases and Renewable Energy Amortization | 555 | 341,839 | 349,345 | 319,266 | 266,018 |
| 113 | City of Gallup - Mandoza Station Charges | 555 | - | - | - | - |
| 114 | Coal Mine Decommissioning | 501.15 | 187,892 | 187,892 | 173,950 | 186,473 |
| 115 | Broker Fees | 557 | 18,155 | 22,720 | 21,855 | 19,590 |
| 116 | Total Other Production - Fuel Related | | 11,884,596 | 6,005,590 | 24,476,258 | 24,894,801 |
| 117 | | | | | | |
| 118 | Transmission Operation | | | | | |
| 119 | Total Operation Supervision and Engineering | 560 | 186,100 | 178,564 | 208,080 | 318,178 |
| 120 | Total Load Dispatching | 561 | 82,511 | 112,388 | 66,967 | 71,361 |
| 121 | Total Station Expenses | 562 | 113,761 | 227,248 | 60,496 | 109,031 |
| 122 | Total Overhead Lines Expenses | 563 | 7,900 | 49,307 | 13,458 | 34,117 |
| 123 | Total Misc. Transmission Expenses | 566 | 185,796 | 330,831 | 147,135 | 423,532 |
| 124 | Total Rents | 567 | 1,351,631 | 1,351,911 | 1,613,133 | 1,412,008 |
| 125 | Total Transmission Operation | | 1,927,697 | 2,250,249 | 2,109,269 | 2,368,229 |
| 126 | | | | | | |

| | A | B | C | D | E | F |
|---|---|---|---|---|---|---|
| 1 | **PNM Exhibit RNG-4** | | | | | |
| 2 | **Schedule H-1** | | | | | |
| 3 | **Operations and Maintenance Expense** | | | | | |
| 4 | **Base Period Ending 6/30/2026** | | | | | |
| 5 | **Test Period Ending 9/30/2028** | | | | | |
| 6 | **Base Period data is historical information from the Company's Books and Records** | | | | | |
| 7 | O&M Model Lead Sheet | | | | | |
| 8 | | | | | | |
| 9 | **Descriptions** | **FERC** | **Jul-25** | **Aug-25** | **Sep-25** | **Oct-25** |
| 127 | Transmission Maintenance | | | | | |
| 128 | Total Maintenance Supervision and Engineering | 568 | 1,605 | 2,649 | 1,877 | 1,499 |
| 129 | Total Maintenance of Structures | 569 | 107,903 | 121,321 | 128,456 | 169,561 |
| 130 | Total Maintenance of Station Equipment | 570 | 328,966 | 290,626 | 318,772 | 360,226 |
| 131 | Total Maintenance of Overhead Lines | 571 | 43,385 | 40,502 | 111,477 | 177,422 |
| 132 | Total Maintenance of Underground Lines | 572 | - | - | - | - |
| 133 | Total Maintenance of Misc. Transm Plant | 573 | - | - | - | - |
| 134 | Total Maintenance Transmission Plant | 574 | - | 536 | 3,709 | 695 |
| 135 | Incremental FERC Rate - Transmission O&M | 560-564,566-574 | - | - | - | - |
| 136 | Total Transmission Maintenance | | 481,859 | 455,633 | 564,291 | 709,404 |
| 137 | | | | | | |
| 138 | Transmission O&M by Others (565) | | | | | |
| 139 | Total Transmission by Others | 565 | 2,579,657 | 1,937,406 | 2,190,448 | 1,966,151 |
| 140 | Total Transmission O&M by Others (565) | | 2,579,657 | 1,937,406 | 2,190,448 | 1,966,151 |
| 141 | | | | | | |
| 142 | Total Transmission O&M | | 4,989,213 | 4,643,288 | 4,864,008 | 5,043,783 |
| 143 | | | | | | |

| | A | B | C | D | E | F |
|---|---|---|---|---|---|---|
| 1 | **PNM Exhibit RNG-4** | | | | | |
| 2 | **Schedule H-1** | | | | | |
| 3 | **Operations and Maintenance Expense** | | | | | |
| 4 | **Base Period Ending 6/30/2026** | | | | | |
| 5 | **Test Period Ending 9/30/2028** | | | | | |
| 6 | **Base Period data is historical information from the Company's Books and Records** | | | | | |
| 7 | O&M Model Lead Sheet | | | | | |
| 8 | | | | | | |
| 9 | **Descriptions** | **FERC** | **Jul-25** | **Aug-25** | **Sep-25** | **Oct-25** |
| 144 | Distribution Operation | | | | | |
| 145 | Total Operation Supervision and Engineering | 580 | 208,357 | 11,025 | 190,744 | 189,975 |
| 146 | Total Station Expenses | 582 | 84,867 | 90,070 | 122,343 | 56,355 |
| 147 | Total Overhead Lines Expenses | 583 | 395,759 | 334,110 | 291,230 | 280,148 |
| 148 | Total Underground Lines Expenses | 584 | 88,546 | 134,198 | 84,863 | 73,330 |
| 149 | Total Street Lighting & Signal System Exp | 585 | - | - | - | - |
| 150 | Total Meter Expenses | 586 | 457,197 | 309,755 | 225,419 | 367,532 |
| 151 | Total Meter Expenses - Grid Mod | 586 - Grid Mod | - | - | - | - |
| 152 | Total Misc. Expenses | 588 | 738,971 | 985,355 | 785,961 | 910,254 |
| 153 | Total Rents | 589 | 61,181 | 66,150 | 61,679 | 61,182 |
| 154 | Total Distribution Operation | | 2,034,877 | 1,930,664 | 1,762,239 | 1,938,775 |
| 155 | | | | | | |
| 156 | Distribution Maintenance | | | | | |
| 157 | Total Maintenance Supervision and Engineering | 590 | 79,365 | 47,067 | 115,058 | 47,345 |
| 158 | Total Maintenance of Structures | 591 | 2,161 | 4,115 | 3,645 | 2,226 |
| 159 | Total Maintenance of Station Equipment | 592 | 229,856 | 236,562 | 234,512 | 170,912 |
| 160 | Total Maintenance of Overhead Lines | 593 | 1,184,367 | 854,193 | 768,583 | 931,462 |
| 161 | Total Maintenance of Underground Lines | 594 | 253,387 | 159,421 | 417,059 | 283,678 |
| 162 | Total Maintenance of Line Transformers | 595 | - | - | - | - |
| 163 | Total Maintenance of Street Lighting & Signal Systems | 596 | 79,042 | 125,291 | 37,756 | 83,989 |
| 164 | Total Maintenance of Meters | 597 | 38,783 | 75,520 | 42,143 | 50,455 |
| 165 | Total Maintenance of Meters - Grid Mod | 597 - Grid Mod | - | - | - | - |
| 166 | Total Maintenance of Misc. Distribution Plant | 598 | - | - | - | - |
| 167 | Total Other Distribution O&M - Grid Mod | 580-598 Grid Mod | - | - | - | 0 |
| 168 | Total Distribution Maintenance | | 1,866,960 | 1,502,168 | 1,618,754 | 1,570,068 |

| | A | B | C | D | E | F |
|---|---|---|---|---|---|---|
| 1 | **PNM Exhibit RNG-4** | | | | | |
| 2 | **Schedule H-1** | | | | | |
| 3 | **Operations and Maintenance Expense** | | | | | |
| 4 | **Base Period Ending 6/30/2026** | | | | | |
| 5 | **Test Period Ending 9/30/2028** | | | | | |
| 6 | **Base Period data is historical information from the Company's Books and Records** | | | | | |
| 7 | O&M Model Lead Sheet | | | | | |
| 8 | | | | | | |
| 9 | **Descriptions** | **FERC** | **Jul-25** | **Aug-25** | **Sep-25** | **Oct-25** |
| 169 | | | | | | |
| 170 | Total Distribution O&M | | 3,901,837 | 3,432,833 | 3,380,993 | 3,508,843 |
| 171 | | | | | | |
| 172 | Customer Accounting Expenses | | | | | |
| 173 | Total Supervision | 901 | (23,381) | (24,799) | (21,077) | (22,639) |
| 174 | Total Meter Reading Expenses | 902 | 785,058 | 538,456 | 771,060 | 760,468 |
| 175 | Total Customer Records and Collection Exp | 903 | 1,087,669 | 1,040,422 | 938,911 | 993,242 |
| 176 | Total Uncollectible Accounts | 904 | 299,464 | 210,388 | 549,206 | 308,408 |
| 177 | Total Misc. Customer Accounts Expenses | 905 | - | - | - | - |
| 178 | Total Customer Accounting Expenses - Grid Mod | 901-905 | - | - | - | - |
| 179 | Total Customer Accounting Expenses | | 2,148,810 | 1,764,467 | 2,238,099 | 2,039,480 |
| 180 | | | | | | |
| 181 | Customer Service & Informational Exp | | | | | |
| 182 | Total Customer Service & Informational Exp | 906 | 10,442 | (24,918) | 11,316 | 6,378 |
| 183 | Total Customer Assistance Expenses | 908 | 121,955 | 65,390 | 90,849 | 101,098 |
| 184 | Total Informational & Instructional Advert Exp | 909 | - | - | - | - |
| 185 | Total Miscellaneous Customer Service & Informational Expenses | 910 | - | - | - | - |
| 186 | Total Customer Service & Inform Exp | | 132,397 | 40,472 | 102,164 | 107,476 |
| 187 | | | | | | |

| | A | B | C | D | E | F |
|---|---|---|---|---|---|---|
| 1 | **PNM Exhibit RNG-4** | | | | | |
| 2 | **Schedule H-1** | | | | | |
| 3 | **Operations and Maintenance Expense** | | | | | |
| 4 | **Base Period Ending 6/30/2026** | | | | | |
| 5 | **Test Period Ending 9/30/2028** | | | | | |
| 6 | **Base Period data is historical information from the Company's Books and Records** | | | | | |
| 7 | O&M Model Lead Sheet | | | | | |
| 8 | | | | | | |
| 9 | **Descriptions** | **FERC** | **Jul-25** | **Aug-25** | **Sep-25** | **Oct-25** |
| 188 | Sales Expenses | | | | | |
| 189 | Total Demonstrating and Selling Expenses - Non Production | 912 | - | - | - | - |
| 190 | Total Demonstrating and Selling Expenses - Production | 912 | 483,922 | 498,339 | 421,315 | 344,008 |
| 191 | Total Advertising Expense | 913 | - | - | - | - |
| 192 | Total Sales Expenses | | 483,922 | 498,339 | 421,315 | 344,008 |
| 193 | | | | | | |
| 194 | Administrative & General Expenses | | | | | |
| 195 | Administrative & General Exp - Operation | | | | | |
| 196 | | | | | | |
| 197 | Total Administrative & General Salaries | 920 | 293,304 | 288,447 | 292,017 | 312,894 |
| 198 | Total Office Supplies and Expenses | 921 | 115,199 | 190,907 | 127,711 | 164,473 |
| 199 | Total Admin Expenses Transferred--Credit | 922 | (1,911,307) | (1,500,542) | (2,158,539) | (2,103,916) |
| 200 | Total Production Related - Shared Services | 922.9 | 2,038,368 | 1,942,664 | 2,031,776 | 2,185,700 |
| 201 | Total Transmission Related - Shared Services | 922.9 | 1,575,901 | 1,493,142 | 1,623,843 | 1,597,984 |
| 202 | Total Distribution Related - Shared Services | 922.9 | 6,749,064 | 6,578,119 | 6,832,288 | 7,175,304 |
| 203 | Total Outside Services Employed | 923 | 549,907 | 338,891 | 246,042 | 859,457 |
| 204 | Total Property Insurance | 924 | 269,346 | 270,561 | 316,336 | 267,249 |
| 205 | Total Injuries and Damages | 925 | 827,672 | 869,447 | 665,996 | 913,228 |
| 206 | Total Employee Pensions and Benefits | 926 | 1,242,629 | 1,226,777 | 1,545,871 | 1,392,428 |
| 207 | Total Regulatory Commission Expenses | 928 | 4,734,196 | 5,415,861 | 4,701,739 | 3,790,529 |
| 208 | Total Regulatory Commission Expenses - Rate Case Expense | 928 | - | - | - | - |
| 209 | Total General Advertising/Misc. General Exp | 930 | 906,195 | 1,206,957 | 815,567 | 1,241,817 |
| 210 | Total Rents - Distribution | 931 | 22,325 | 21,437 | 21,487 | 21,523 |
| 211 | Total Gas A&M Maintenance-Transmission | 932 | - | - | - | - |
| 212 | Total Administrative & General Expenses | | 17,412,799 | 18,342,668 | 17,062,133 | 17,818,669 |
| 213 | | | | | | |

| | A | B | C | D | E | F |
|---|---|---|---|---|---|---|
| 1 | **PNM Exhibit RNG-4** | | | | | |
| 2 | **Schedule H-1** | | | | | |
| 3 | **Operations and Maintenance Expense** | | | | | |
| 4 | **Base Period Ending 6/30/2026** | | | | | |
| 5 | **Test Period Ending 9/30/2028** | | | | | |
| 6 | **Base Period data is historical information from the Company's Books and Records** | | | | | |
| 7 | O&M Model Lead Sheet | | | | | |
| 8 | | | | | | |
| 9 | **Descriptions** | **FERC** | **Jul-25** | **Aug-25** | **Sep-25** | **Oct-25** |
| 214 | Admin & General Exp - Maintenance | | | | | |
| 215 | Total Maintenance of General Plant | 935 | 196,744 | 119,777 | 196,716 | 140,026 |
| 216 | Total Admin & General - Maintenance | | 196,744 | 119,777 | 196,716 | 140,026 |
| 217 | | | | | | |
| 218 | Renewables - A&G (920-935) | 920-935 | 30,493 | 30,187 | 34,975 | 29,338 |
| 219 | Grid Mod - A&G (920-935) | 920-935 | - | - | - | 393,830 |
| 220 | Energy Storage Transmission - A&G (920-935) | 920-935 | - | - | - | - |
| 221 | Energy Storage Distribution - A&G (920-935) | 920-935 | 1,962 | 1,962 | 2,364 | 1,870 |
| 222 | Total Admin & General - Renewables and Grid Mod | | 32,455 | 32,149 | 37,339 | 425,038 |
| 223 | | | | | | |
| 224 | Total Admin and General Expenses | | 17,641,999 | 18,494,595 | 17,296,188 | 18,383,733 |
| 225 | | | | | | |
| 226 | Total Operation and Maintenance Exp | | 79,739,639 | 78,296,025 | 75,808,002 | 81,450,424 |
| 227 | | | | | | |
| 228 | This schedule is sponsored by PNM Witness Gutierrez | | | | | |
| 229 | Please see H1 Base and Test Notes Page for corresponding notes. | | | | | |

| | A | B | G | H | I | J | K | L |
|---|---|---|---|---|---|---|---|---|
| 1 | **PNM Exhibit RNG-4** | | | | | | | |
| 2 | **Schedule H-1** | | | | | | | |
| 3 | **Operations and Maintenance Expense** | | | | | | | |
| 4 | **Base Period Ending 6/30/2026** | | | | | | | |
| 5 | **Test Period Ending 9/30/2028** | | | | | | | |
| 6 | **Base Period data is historical information from the Company's Books and Records** | | | | | | | |
| 7 | O&M Model Lead Sheet | | | | | | | |
| 8 | | | | | | | | |
| 9 | **Descriptions** | **FERC** | **Nov-25** | **Dec-25** | **Jan-26** | **Feb-26** | **Mar-26** | **Apr-26** |
| 10 | Non-Fuel Production O&M | | | | | | | |
| 11 | Steam Production Operation | | | | | | | |
| 12 | Total Operation Supervision and Engineering | 500 | 165,258 | 246,130 | 105,454 | 155,755 | 171,408 | 296,236 |
| 13 | Total Steam Expenses | 502 | 502,975 | 860,521 | 573,305 | 471,015 | 572,240 | 354,328 |
| 14 | Total Steam from Other Sources | 503 | - | - | - | - | - | - |
| 15 | Total Electric Expenses | 505 | 91,739 | 89,729 | 131,223 | 94,450 | 141,012 | 59,972 |
| 16 | Total Misc. Steam Power Expenses | 506 | 219,388 | 426,539 | 142,227 | 158,956 | 89,008 | 175,336 |
| 17 | Total Rents | 507 | 18,650 | 18,579 | 18,572 | 18,546 | 18,502 | 18,481 |
| 18 | Total Steam Production Expense | | 998,009 | 1,641,498 | 970,780 | 898,722 | 992,169 | 904,352 |
| 19 | | | | | | | | |
| 20 | Steam Production Maintenance | | | | | | | |
| 21 | Total Maintenance Supervision and Engineering | 510 | 38,002 | 85,739 | 68,353 | 106,203 | 99,510 | 60,229 |
| 22 | Total Maintenance of Structures | 511 | 427,605 | 332,554 | 261,150 | 256,705 | 277,109 | 173,028 |
| 23 | Total Maintenance of Boiler Plant | 512 | 339,031 | 302,959 | 430,957 | 413,338 | 500,827 | 804,533 |
| 24 | Total Maintenance of Electric Plant | 513 | 52,560 | 20,544 | 19,932 | 41,641 | 169,345 | 168,936 |
| 25 | Total Maintenance of Misc. Electric Plant | 514 | 34,128 | 110,731 | 27,786 | 84,359 | 348,371 | (159,804) |
| 26 | Total Steam Production Maintenance Subtotal | | 891,326 | 852,527 | 808,177 | 902,246 | 1,395,161 | 1,046,922 |
| 27 | | | | | | | | |
| 28 | Total Steam Production O&M | | 1,889,336 | 2,494,025 | 1,778,957 | 1,800,968 | 2,387,331 | 1,951,274 |
| 29 | | | | | | | | |

| | A | B | G | H | I | J | K | L |
|---|---|---|---|---|---|---|---|---|
| 1 | **PNM Exhibit RNG-4** | | | | | | | |
| 2 | **Schedule H-1** | | | | | | | |
| 3 | **Operations and Maintenance Expense** | | | | | | | |
| 4 | **Base Period Ending 6/30/2026** | | | | | | | |
| 5 | **Test Period Ending 9/30/2028** | | | | | | | |
| 6 | **Base Period data is historical information from the Company's Books and Records** | | | | | | | |
| 7 | O&M Model Lead Sheet | | | | | | | |
| 8 | | | | | | | | |
| 9 | **Descriptions** | **FERC** | **Nov-25** | **Dec-25** | **Jan-26** | **Feb-26** | **Mar-26** | **Apr-26** |
| 30 | Nuclear Production Operation | | | | | | | |
| 31 | Total Operation Supervision and Engineering | 517 | 462,177 | 598,360 | 483,050 | 481,456 | 516,531 | 544,743 |
| 32 | Total Coolants and Water | 519 | 390,694 | 505,544 | 379,984 | 459,952 | 447,006 | 505,452 |
| 33 | Total Steam Expenses | 520 | 211,526 | 152,933 | 219,949 | 192,785 | 225,028 | 387,491 |
| 34 | Total Electric Expenses | 523 | 259,161 | 405,797 | 279,100 | 240,937 | 395,974 | 382,299 |
| 35 | Total Misc. Nuclear Power Expenses, excluding PV 1&2 Decommissioning and CE Credit | 524 | 783,037 | 1,479,987 | 876,061 | 824,132 | 1,107,699 | 211,821 |
| 36 | Total Misc. Nuclear Power Expenses - PV 1&2 Decommissioning and CE Credit | 524 | - | - | - | - | - | - |
| 37 | Total Rents - Nuclear, excluding PV 1&2 Prudency Audit and Excess Gain Amortization | 525 | 8,458 | 8,458 | - | - | - | - |
| 38 | Total Rents-Nuclear - PV 1&2 Prudency Audit | 525 | - | - | - | - | - | - |
| 39 | Total Rents-Nuclear - PV 1&2 Excess Gain Amortization | 525 | (3,319) | (3,319) | (3,319) | (3,319) | (3,319) | (3,319) |
| 40 | Total Nuclear Production Operation | | 2,111,733 | 3,147,760 | 2,234,825 | 2,195,943 | 2,688,919 | 2,028,487 |
| 41 | | | | | | | | |
| 42 | Nuclear Production Maintenance | | | | | | | |
| 43 | Total Maintenance Supervision and Engineering | 528 | 101,518 | (8,744) | 165,283 | 201,624 | 182,271 | 574,180 |
| 44 | Total Maintenance of Structures | 529 | 89,079 | 56,288 | 41,721 | 61,280 | 93,285 | 147,563 |
| 45 | Total Maintenance of Reactor Plant | 530 | 1,060,532 | 276,336 | 194,491 | 145,182 | 412,685 | 1,100,706 |
| 46 | Total Maintenance of Electric Plant | 531 | 579,614 | 438,925 | 271,125 | 300,272 | 520,484 | 1,141,158 |
| 47 | Total Maintenance of Misc. Nuclear Plant | 532 | 65,878 | 91,497 | 80,369 | 103,356 | 122,263 | 140,042 |
| 48 | Palo Verde 3 - Nuclear Production | 517,519-556 | - | - | - | - | - | - |
| 49 | Total Nuclear Production Maintenance | | 1,896,621 | 854,303 | 752,988 | 811,713 | 1,330,987 | 3,103,650 |
| 50 | | | | | | | | |
| 51 | Total Nuclear Production O&M | | 4,008,354 | 4,002,063 | 2,987,813 | 3,007,657 | 4,019,906 | 5,132,136 |

| | A | B | G | H | I | J | K | L |
|---|---|---|---|---|---|---|---|---|
| 1 | **PNM Exhibit RNG-4** | | | | | | | |
| 2 | **Schedule H-1** | | | | | | | |
| 3 | **Operations and Maintenance Expense** | | | | | | | |
| 4 | **Base Period Ending 6/30/2026** | | | | | | | |
| 5 | **Test Period Ending 9/30/2028** | | | | | | | |
| 6 | **Base Period data is historical information from the Company's Books and Records** | | | | | | | |
| 7 | O&M Model Lead Sheet | | | | | | | |
| 8 | | | | | | | | |
| 9 | **Descriptions** | **FERC** | **Nov-25** | **Dec-25** | **Jan-26** | **Feb-26** | **Mar-26** | **Apr-26** |
| 52 | | | | | | | | |
| 53 | Other Production Operation | | | | | | | |
| 54 | Total Operation Supervision and Engineering | 546 | 738,682 | 654,219 | 272,499 | 378,789 | 735,129 | 364,326 |
| 55 | Total Misc. Other Power Expenses | 549 | (1,514) | 2,043 | (4,291) | - | - | - |
| 56 | Total Misc. Other Power Expenses-Renew | 549-Renew | - | - | 315 | - | - | - |
| 57 | Total Other Production Operation | | 737,168 | 656,262 | 268,523 | 378,789 | 735,129 | 364,326 |
| 58 | | | | | | | | |
| 59 | Other Production Maintenance | | | | | | | |
| 60 | Total Maintenance of Structures | 552 | 87,332 | 132,136 | 97,861 | 210,933 | 281,784 | 219,851 |
| 61 | Total Maintenance of Gen and Electric Plant | 553 | 878,400 | 804,331 | 499,779 | 922,161 | 826,407 | 1,098,283 |
| 62 | Total Maintenance of Gen and Electric Plant-Renew | 553-Renew | - | - | - | - | - | - |
| 63 | Total System Control and Load Dispatching | 556 | 411,736 | 456,199 | 1,208,897 | 429,465 | 463,233 | 654,750 |
| 64 | Total Other Production Maintenance | | 1,377,468 | 1,392,666 | 1,806,537 | 1,562,559 | 1,571,423 | 1,972,884 |
| 65 | | | | | | | | |
| 66 | Total Other Production O&M | | 2,114,636 | 2,048,929 | 2,075,060 | 1,941,348 | 2,306,552 | 2,337,210 |
| 67 | | | | | | | | |
| 68 | Solar Production Operations and Maintenance | | | | | | | |
| 69 | Total Generation & Plant OpEx-Solar | 558.2 | 4,262 | 59,777 | 289,607 | 35,586 | 40,576 | 6,581 |
| 70 | Total Generation & Plant OpEx-Solar - Renewables | 558.2 Renew | 32,501 | 100,940 | 216,863 | 64,509 | 100,652 | 31,214 |
| 71 | Total Maintenance -Solar Panels, Structures, & Equipment | 558.7 | - | 117,091 | (251,353) | - | 120,420 | - |
| 72 | Total Maintenance -Solar Panels, Structures, & Equipment - Energy Storage Transmission | 558.7 Energy Storage Tran | - | - | - | - | - | - |
| 73 | Total Maintenance -Solar Panels, Structures, & Equipment - Battery Storage | 558.7 Energy Storage Dist | - | - | - | - | - | - |
| 74 | Total Maintenance -Solar Panels, Structures, & Equipment - Battery | 558.7 Renew | - | 290,051 | - | - | 519,202 | 1,288 |
| 75 | Total Solar Production O&M | | 36,763 | 567,859 | 255,117 | 100,095 | 780,850 | 39,083 |
| 76 | | | | | | | | |
| 77 | Total Non-Fuel Production O&M | | 8,049,089 | 9,112,876 | 7,096,948 | 6,850,068 | 9,494,638 | 9,459,704 |
| 78 | | | | | | | | |
| 79 | Energy Storage Operations and Maintenance | | | | | | | |
| 80 | Total Maintenance-Storage Eqp, Struc Total- Energy Storage | 578.2 | - | - | - | - | 228 | 254 |
| 81 | Maintenance-Storage Eqp, Struc Total - Energy Storage Transmission | 578.2-Energy Storage Tran | - | - | - | - | - | - |
| 82 | Maintenance-Storage Eqp, Struc Total - Energy Storage Distribution | 578.2-Energy Storage Dist. | - | 53,099 | 514 | 253 | 949 | 3,502 |
| 83 | Total Energy Storage Operations and Maintenance | | - | 53,099 | 514 | 253 | 1,177 | 3,756 |
| 84 | | | | | | | | |

| | A | B | G | H | I | J | K | L |
|---|---|---|---|---|---|---|---|---|
| 1 | **PNM Exhibit RNG-4** | | | | | | | |
| 2 | **Schedule H-1** | | | | | | | |
| 3 | **Operations and Maintenance Expense** | | | | | | | |
| 4 | **Base Period Ending 6/30/2026** | | | | | | | |
| 5 | **Test Period Ending 9/30/2028** | | | | | | | |
| 6 | **Base Period data is historical information from the Company's Books and Records** | | | | | | | |
| 7 | O&M Model Lead Sheet | | | | | | | |
| 8 | | | | | | | | |
| 9 | **Descriptions** | **FERC** | **Nov-25** | **Dec-25** | **Jan-26** | **Feb-26** | **Mar-26** | **Apr-26** |
| 85 | Fuel Production O&M | | | | | | | |
| 86 | Coal Fuel Burn | 501 | 3,787,482 | 4,550,620 | 5,313,548 | 3,399,007 | 2,283,560 | 2,162,491 |
| 87 | Steam Fuel Handling and Disposal | 501 | 165,653 | 83,379 | 195,920 | 229,441 | 295,603 | 713,278 |
| 88 | Tot Nuclear Fuel Exp | 518 | 766,618 | 1,422,820 | 1,520,249 | 1,361,891 | 1,234,290 | 930,256 |
| 89 | Total Nuclear Disposal | 518 | 165,112 | (218,072) | 322,343 | 284,023 | (277,653) | 173,551 |
| 90 | Total Gas Generation | 547 | 2,665,018 | 1,760,326 | 5,980,940 | 554,976 | (764,093) | (1,570,844) |
| 91 | Wind PPAs | 555 | 2,217,715 | 3,208,929 | 2,816,976 | 2,512,766 | 2,761,900 | 2,892,402 |
| 92 | Geothermal PPA | 555 | 731,499 | 799,140 | 840,143 | 717,154 | 715,712 | 647,809 |
| 93 | Total Purchased Power Energy | 555 | 11,093,060 | 11,255,912 | 10,605,455 | 7,528,535 | 9,593,256 | 9,049,251 |
| 94 | Spinning Reserves | 555 | - | - | - | - | - | - |
| 95 | ESA Fuel Reclass | 555 | - | - | - | - | - | - |
| 96 | Total Fuel Production O&M | | 21,592,156 | 22,863,055 | 27,595,573 | 16,587,794 | 15,842,575 | 14,998,194 |
| 97 | | | | | | | | |
| 98 | Off-system Sales | 447.3 | (6,753,563) | (6,303,172) | (8,505,110) | (3,735,170) | (4,928,976) | (1,007,826) |
| 99 | Off-system Sales - Other | | - | - | - | - | - | - |
| 100 | Physical Sales of Gas (under FAC hedge plan) | 447.7 | - | - | - | - | - | - |
| 101 | EDAM | 456.1 | - | - | - | - | - | - |
| 102 | Short Term PTP and Transmission Service | 456.1 | - | - | - | - | - | - |
| 103 | Total Other Fuel | | (6,753,563) | (6,303,172) | (8,505,110) | (3,735,170) | (4,928,976) | (1,007,826) |

| | A | B | G | H | I | J | K | L |
|---|---|---|---|---|---|---|---|---|
| 1 | **PNM Exhibit RNG-4** | | | | | | | |
| 2 | **Schedule H-1** | | | | | | | |
| 3 | **Operations and Maintenance Expense** | | | | | | | |
| 4 | **Base Period Ending 6/30/2026** | | | | | | | |
| 5 | **Test Period Ending 9/30/2028** | | | | | | | |
| 6 | **Base Period data is historical information from the Company's Books and Records** | | | | | | | |
| 7 | O&M Model Lead Sheet | | | | | | | |
| 8 | | | | | | | | |
| 9 | **Descriptions** | **FERC** | **Nov-25** | **Dec-25** | **Jan-26** | **Feb-26** | **Mar-26** | **Apr-26** |
| 104 | | | | | | | | |
| 105 | Other Production - Fuel Related | | | | | | | |
| 106 | Gas Plants Fuel Transportation | 547 | 984,259 | 991,624 | 1,084,376 | 1,053,305 | 1,076,409 | 1,152,637 |
| 107 | Gas PPA - Valencia - Demand | 555 | 1,676,499 | 1,659,498 | 1,743,253 | 1,739,080 | 1,737,784 | 1,736,086 |
| 108 | Energy Storage Agreement - Demand | 555 | 6,397,086 | 6,476,763 | 6,476,763 | 8,156,703 | 8,469,017 | 8,364,913 |
| 109 | Purchase power for Economy Service Customer | 555 | 1,174,407 | 711,392 | 958,083 | 1,572,469 | (72,079) | 592,670 |
| 110 | Purchased power for Rate 36B | 555 | 5,089,924 | 5,786,631 | 5,469,191 | 5,913,456 | 6,430,850 | 6,139,577 |
| 111 | FPPCAC deferral | 501.1,555.4 | 6,630,094 | 10,654,182 | (639,619) | 4,361,423 | 5,780,664 | 810,511 |
| 112 | Rec Purchases and Renewable Energy Amortization | 555 | 264,148 | 236,212 | 191,790 | 228,103 | 248,167 | 258,617 |
| 113 | City of Gallup - Mandoza Station Charges | 555 | - | - | - | - | - | - |
| 114 | Coal Mine Decommissioning | 501.15 | 186,473 | 186,473 | 176,252 | 176,252 | 176,252 | 176,252 |
| 115 | Broker Fees | 557 | 19,495 | 17,655 | 18,510 | 18,120 | 17,605 | 19,270 |
| 116 | Total Other Production - Fuel Related | | 22,422,385 | 26,720,430 | 15,478,599 | 23,218,911 | 23,864,669 | 19,250,533 |
| 117 | | | | | | | | |
| 118 | Transmission Operation | | | | | | | |
| 119 | Total Operation Supervision and Engineering | 560 | 182,778 | (2,811,817) | 234,777 | 301,467 | 353,857 | 377,480 |
| 120 | Total Load Dispatching | 561 | 71,023 | 61,226 | 95,057 | 72,362 | 71,172 | 69,445 |
| 121 | Total Station Expenses | 562 | 80,654 | 161,119 | 111,137 | 120,185 | 155,780 | 192,679 |
| 122 | Total Overhead Lines Expenses | 563 | 23,867 | 22,484 | 1,632 | 7,964 | 4,328 | 57,901 |
| 123 | Total Misc. Transmission Expenses | 566 | 330,262 | 483,620 | 518,241 | 197,506 | 150,607 | 209,411 |
| 124 | Total Rents | 567 | 1,412,008 | 1,213,712 | 1,402,233 | 1,403,937 | 1,399,292 | 1,397,409 |
| 125 | Total Transmission Operation | | 2,100,591 | (869,655) | 2,363,079 | 2,103,420 | 2,135,036 | 2,304,325 |
| 126 | | | | | | | | |

| | A | B | G | H | I | J | K | L |
|---|---|---|---|---|---|---|---|---|
| 1 | **PNM Exhibit RNG-4** | | | | | | | |
| 2 | **Schedule H-1** | | | | | | | |
| 3 | **Operations and Maintenance Expense** | | | | | | | |
| 4 | **Base Period Ending 6/30/2026** | | | | | | | |
| 5 | **Test Period Ending 9/30/2028** | | | | | | | |
| 6 | **Base Period data is historical information from the Company's Books and Records** | | | | | | | |
| 7 | O&M Model Lead Sheet | | | | | | | |
| 8 | | | | | | | | |
| 9 | **Descriptions** | **FERC** | **Nov-25** | **Dec-25** | **Jan-26** | **Feb-26** | **Mar-26** | **Apr-26** |
| 127 | Transmission Maintenance | | | | | | | |
| 128 | Total Maintenance Supervision and Engineering | 568 | 1,104 | 1,877 | 1,987 | 6,900 | 2,946 | 3,147 |
| 129 | Total Maintenance of Structures | 569 | 169,741 | 143,392 | 78,527 | 205,524 | 268,406 | 107,762 |
| 130 | Total Maintenance of Station Equipment | 570 | 272,214 | 404,546 | 321,738 | 343,190 | 431,196 | 361,448 |
| 131 | Total Maintenance of Overhead Lines | 571 | 51,692 | 95,244 | 36,103 | 143,075 | 69,066 | 80,753 |
| 132 | Total Maintenance of Underground Lines | 572 | - | - | - | - | - | - |
| 133 | Total Maintenance of Misc. Transm Plant | 573 | - | - | - | - | - | - |
| 134 | Total Maintenance Transmission Plant | 574 | - | 470 | - | 2,696 | - | - |
| 135 | Incremental FERC Rate - Transmission O&M | 560-564,566-574 | - | - | - | - | - | - |
| 136 | Total Transmission Maintenance | | 494,752 | 645,527 | 438,355 | 701,385 | 771,614 | 553,111 |
| 137 | | | | | | | | |
| 138 | Transmission O&M by Others (565) | | | | | | | |
| 139 | Total Transmission by Others | 565 | 1,411,220 | 1,805,200 | 2,797,897 | 2,928,461 | 1,899,358 | 2,831,803 |
| 140 | Total Transmission O&M by Others (565) | | 1,411,220 | 1,805,200 | 2,797,897 | 2,928,461 | 1,899,358 | 2,831,803 |
| 141 | | | | | | | | |
| 142 | Total Transmission O&M | | 4,006,562 | 1,581,072 | 5,599,331 | 5,733,266 | 4,806,008 | 5,689,239 |
| 143 | | | | | | | | |

| | A | B | G | H | I | J | K | L |
|---|---|---|---|---|---|---|---|---|
| 1 | **PNM Exhibit RNG-4** | | | | | | | |
| 2 | **Schedule H-1** | | | | | | | |
| 3 | **Operations and Maintenance Expense** | | | | | | | |
| 4 | **Base Period Ending 6/30/2026** | | | | | | | |
| 5 | **Test Period Ending 9/30/2028** | | | | | | | |
| 6 | **Base Period data is historical information from the Company's Books and Records** | | | | | | | |
| 7 | O&M Model Lead Sheet | | | | | | | |
| 8 | | | | | | | | |
| 9 | **Descriptions** | **FERC** | **Nov-25** | **Dec-25** | **Jan-26** | **Feb-26** | **Mar-26** | **Apr-26** |
| 144 | Distribution Operation | | | | | | | |
| 145 | Total Operation Supervision and Engineering | 580 | 351,331 | 242,465 | 110,789 | 93,529 | 113,431 | 139,271 |
| 146 | Total Station Expenses | 582 | 49,768 | 157,938 | 64,837 | 48,557 | 137,990 | 32,981 |
| 147 | Total Overhead Lines Expenses | 583 | 210,170 | 269,997 | 309,629 | 224,866 | 252,406 | 247,855 |
| 148 | Total Underground Lines Expenses | 584 | 81,478 | 80,239 | 97,892 | 69,918 | 81,095 | 68,581 |
| 149 | Total Street Lighting & Signal System Exp | 585 | - | - | - | - | - | - |
| 150 | Total Meter Expenses | 586 | 272,688 | 167,188 | 310,182 | 301,559 | 241,962 | 325,843 |
| 151 | Total Meter Expenses - Grid Mod | 586 - Grid Mod | - | - | - | - | - | - |
| 152 | Total Misc. Expenses | 588 | 720,352 | 258,850 | 715,362 | 641,489 | 926,279 | 774,595 |
| 153 | Total Rents | 589 | 61,182 | 63,960 | 152,019 | 60,297 | 60,555 | 60,555 |
| 154 | Total Distribution Operation | | 1,746,971 | 1,240,638 | 1,760,709 | 1,440,214 | 1,813,719 | 1,649,681 |
| 155 | | | | | | | | |
| 156 | Distribution Maintenance | | | | | | | |
| 157 | Total Maintenance Supervision and Engineering | 590 | 41,813 | 114,182 | 33,534 | 42,017 | 117,669 | 43,640 |
| 158 | Total Maintenance of Structures | 591 | 3,144 | 1,781 | 1,732 | 1,766 | 1,831 | 1,962 |
| 159 | Total Maintenance of Station Equipment | 592 | 209,473 | 114,499 | 136,230 | 200,729 | 232,852 | 166,288 |
| 160 | Total Maintenance of Overhead Lines | 593 | 271,973 | 764,050 | 294,913 | 337,201 | 2,628,774 | 631,993 |
| 161 | Total Maintenance of Underground Lines | 594 | 132,739 | 190,740 | 151,178 | 230,403 | 178,495 | 206,777 |
| 162 | Total Maintenance of Line Transformers | 595 | - | - | - | - | - | - |
| 163 | Total Maintenance of Street Lighting & Signal Systems | 596 | 74,121 | 79,824 | 51,324 | 27,215 | 37,182 | 124,676 |
| 164 | Total Maintenance of Meters | 597 | 71,044 | 59,592 | 52,918 | 53,205 | 58,882 | 66,626 |
| 165 | Total Maintenance of Meters - Grid Mod | 597 - Grid Mod | - | - | - | - | - | - |
| 166 | Total Maintenance of Misc. Distribution Plant | 598 | - | - | - | - | - | - |
| 167 | Total Other Distribution O&M - Grid Mod | 580-598 Grid Mod | 26 | (0) | - | - | - | 3 |
| 168 | Total Distribution Maintenance | | 804,333 | 1,324,668 | 721,829 | 892,536 | 3,255,685 | 1,241,966 |

| | A | B | G | H | I | J | K | L |
|---|---|---|---|---|---|---|---|---|
| 1 | **PNM Exhibit RNG-4** | | | | | | | |
| 2 | **Schedule H-1** | | | | | | | |
| 3 | **Operations and Maintenance Expense** | | | | | | | |
| 4 | **Base Period Ending 6/30/2026** | | | | | | | |
| 5 | **Test Period Ending 9/30/2028** | | | | | | | |
| 6 | **Base Period data is historical information from the Company's Books and Records** | | | | | | | |
| 7 | O&M Model Lead Sheet | | | | | | | |
| 8 | | | | | | | | |
| 9 | **Descriptions** | **FERC** | **Nov-25** | **Dec-25** | **Jan-26** | **Feb-26** | **Mar-26** | **Apr-26** |
| 169 | | | | | | | | |
| 170 | Total Distribution O&M | | 2,551,304 | 2,565,306 | 2,482,538 | 2,332,750 | 5,069,404 | 2,891,647 |
| 171 | | | | | | | | |
| 172 | Customer Accounting Expenses | | | | | | | |
| 173 | Total Supervision | 901 | (16,300) | (15,738) | (16,449) | (15,969) | (19,105) | (18,233) |
| 174 | Total Meter Reading Expenses | 902 | 608,254 | 756,321 | 884,490 | 677,400 | 785,486 | 685,340 |
| 175 | Total Customer Records and Collection Exp | 903 | 888,609 | 1,045,079 | 858,772 | 922,526 | 845,025 | 1,056,988 |
| 176 | Total Uncollectible Accounts | 904 | 559,147 | 593,226 | 346,588 | 581,807 | 446,816 | 393,343 |
| 177 | Total Misc. Customer Accounts Expenses | 905 | - | - | - | - | - | - |
| 178 | Total Customer Accounting Expenses - Grid Mod | 901-905 | - | - | - | - | - | - |
| 179 | Total Customer Accounting Expenses | | 2,039,710 | 2,378,887 | 2,073,401 | 2,165,764 | 2,058,222 | 2,117,438 |
| 180 | | | | | | | | |
| 181 | Customer Service & Informational Exp | | | | | | | |
| 182 | Total Customer Service & Informational Exp | 906 | 2,096 | 4,545 | 642 | 24,730 | 34,107 | 24,518 |
| 183 | Total Customer Assistance Expenses | 908 | 220,366 | 101,721 | 74,531 | 69,148 | 122,607 | 92,689 |
| 184 | Total Informational & Instructional Advert Exp | 909 | - | 107,995 | - | - | - | - |
| 185 | Total Miscellaneous Customer Service & Informational Expenses | 910 | - | - | - | - | - | - |
| 186 | Total Customer Service & Inform Exp | | 222,461 | 214,261 | 75,174 | 93,878 | 156,714 | 117,207 |
| 187 | | | | | | | | |

| | A | B | G | H | I | J | K | L |
|---|---|---|---|---|---|---|---|---|
| 1 | **PNM Exhibit RNG-4** | | | | | | | |
| 2 | **Schedule H-1** | | | | | | | |
| 3 | **Operations and Maintenance Expense** | | | | | | | |
| 4 | **Base Period Ending 6/30/2026** | | | | | | | |
| 5 | **Test Period Ending 9/30/2028** | | | | | | | |
| 6 | **Base Period data is historical information from the Company's Books and Records** | | | | | | | |
| 7 | O&M Model Lead Sheet | | | | | | | |
| 8 | | | | | | | | |
| 9 | **Descriptions** | **FERC** | **Nov-25** | **Dec-25** | **Jan-26** | **Feb-26** | **Mar-26** | **Apr-26** |
| 188 | Sales Expenses | | | | | | | |
| 189 | Total Demonstrating and Selling Expenses - Non Production | 912 | - | - | - | - | - | - |
| 190 | Total Demonstrating and Selling Expenses - Production | 912 | 364,574 | 189,444 | 532,272 | 486,024 | 368,480 | 438,754 |
| 191 | Total Advertising Expense | 913 | - | - | - | - | - | - |
| 192 | Total Sales Expenses | | 364,574 | 189,444 | 532,272 | 486,024 | 368,480 | 438,754 |
| 193 | | | | | | | | |
| 194 | Administrative & General Expenses | | | | | | | |
| 195 | Administrative & General Exp - Operation | | | | | | | |
| 196 | | | | | | | | |
| 197 | Total Administrative & General Salaries | 920 | 268,557 | 260,588 | 291,566 | 304,276 | 315,530 | 316,504 |
| 198 | Total Office Supplies and Expenses | 921 | 144,274 | 268,712 | 133,579 | 126,129 | 181,601 | 40,218 |
| 199 | Total Admin Expenses Transferred--Credit | 922 | (1,664,718) | (3,082,959) | (1,453,839) | (1,171,917) | (1,468,418) | (1,606,021) |
| 200 | Total Production Related - Shared Services | 922.9 | 1,643,239 | 2,770,221 | 1,937,047 | 1,907,310 | 2,035,114 | 2,065,345 |
| 201 | Total Transmission Related - Shared Services | 922.9 | 1,534,137 | 2,211,853 | 1,635,248 | 1,555,131 | 1,898,109 | 1,855,639 |
| 202 | Total Distribution Related - Shared Services | 922.9 | 6,505,868 | 9,515,201 | 7,407,909 | 6,983,159 | 8,318,606 | 7,994,036 |
| 203 | Total Outside Services Employed | 923 | (156,179) | 166,595 | 243,168 | 406,046 | 1,336,260 | 207,181 |
| 204 | Total Property Insurance | 924 | 255,647 | 326,018 | 268,701 | 263,464 | (468,284) | (329,162) |
| 205 | Total Injuries and Damages | 925 | 975,369 | 828,036 | 757,388 | 844,085 | 427,566 | 914,600 |
| 206 | Total Employee Pensions and Benefits | 926 | 1,036,805 | 60,883,790 | 1,099,528 | 1,243,506 | 328,085 | 1,219,985 |
| 207 | Total Regulatory Commission Expenses | 928 | 3,497,352 | 3,590,224 | 3,808,398 | 3,721,155 | 2,974,824 | 2,964,160 |
| 208 | Total Regulatory Commission Expenses - Rate Case Expense | 928 | - | - | - | - | - | - |
| 209 | Total General Advertising/Misc. General Exp | 930 | 662,309 | 1,238,900 | 1,781,974 | 932,992 | 911,896 | 1,601,447 |
| 210 | Total Rents - Distribution | 931 | 20,806 | 21,502 | 21,662 | 21,441 | 19,485 | 23,429 |
| 211 | Total Gas A&M Maintenance-Transmission | 932 | - | - | - | - | - | - |
| 212 | Total Administrative & General Expenses | | 14,723,466 | 78,998,680 | 17,932,330 | 17,136,777 | 16,810,376 | 17,267,361 |
| 213 | | | | | | | | |

| | A | B | G | H | I | J | K | L |
|---|---|---|---|---|---|---|---|---|
| 1 | **PNM Exhibit RNG-4** | | | | | | | |
| 2 | **Schedule H-1** | | | | | | | |
| 3 | **Operations and Maintenance Expense** | | | | | | | |
| 4 | **Base Period Ending 6/30/2026** | | | | | | | |
| 5 | **Test Period Ending 9/30/2028** | | | | | | | |
| 6 | **Base Period data is historical information from the Company's Books and Records** | | | | | | | |
| 7 | O&M Model Lead Sheet | | | | | | | |
| 8 | | | | | | | | |
| 9 | **Descriptions** | **FERC** | **Nov-25** | **Dec-25** | **Jan-26** | **Feb-26** | **Mar-26** | **Apr-26** |
| 214 | Admin & General Exp - Maintenance | | | | | | | |
| 215 | Total Maintenance of General Plant | 935 | 272,937 | 116,659 | 317,961 | 242,927 | 309,524 | 352,326 |
| 216 | Total Admin & General - Maintenance | | 272,937 | 116,659 | 317,961 | 242,927 | 309,524 | 352,326 |
| 217 | | | | | | | | |
| 218 | Renewables - A&G (920-935) | 920-935 | 30,012 | 33,481 | 29,338 | 29,338 | 28,693 | 33,204 |
| 219 | Grid Mod - A&G (920-935) | 920-935 | - | - | - | - | - | 681 |
| 220 | Energy Storage Transmission - A&G (920-935) | 920-935 | - | - | - | - | - | - |
| 221 | Energy Storage Distribution - A&G (920-935) | 920-935 | 1,870 | 2,272 | 1,870 | 1,870 | 1,870 | 2,272 |
| 222 | Total Admin & General - Renewables and Grid Mod | | 31,883 | 35,753 | 31,209 | 31,209 | 30,563 | 36,157 |
| 223 | | | | | | | | |
| 224 | Total Admin and General Expenses | | 15,028,286 | 79,151,093 | 18,281,500 | 17,410,913 | 17,150,463 | 17,655,844 |
| 225 | | | | | | | | |
| 226 | Total Operation and Maintenance Exp | | 69,522,965 | 138,526,350 | 70,710,737 | 71,144,451 | 73,883,376 | 71,614,489 |
| 227 | | | | | | | | |
| 228 | This schedule is sponsored by PNM Witness Gutierrez | | | | | | | |
| 229 | Please see H1 Base and Test Notes Page for corresponding notes. | | | | | | | |

| | A | B | M | N | O | P | Q |
|---|---|---|---|---|---|---|---|
| 1 | **PNM Exhibit RNG-4** | | | | | | |
| 2 | **Schedule H-1** | | | | | | |
| 3 | **Operations and Maintenance Expense** | | | | | | |
| 4 | **Base Period Ending 6/30/2026** | | | | | | |
| 5 | **Test Period Ending 9/30/2028** | | | | | | |
| 6 | **Base Period data is historical information from the Company's Books and Records** | | | | | | |
| 7 | O&M Model Lead Sheet | | | | | | |
| 8 | | | | | | | **Column P** |
| 9 | **Descriptions** | **FERC** | **May-26** | **Jun-26** | **Total Company Base Period** | **Reclass Adjustments** | **Total Company COS Reclassification Adjustments** |
| 10 | Non-Fuel Production O&M | | | | | | |
| 11 | Steam Production Operation | | | | | | |
| 12 | Total Operation Supervision and Engineering | 500 | 317,528 | 19,771 | 2,202,157 | | - |
| 13 | Total Steam Expenses | 502 | 711,581 | 793,241 | 7,397,993 | | - |
| 14 | Total Steam from Other Sources | 503 | - | - | - | | - |
| 15 | Total Electric Expenses | 505 | 83,277 | 92,070 | 1,236,721 | | - |
| 16 | Total Misc. Steam Power Expenses | 506 | 176,553 | 145,238 | 2,184,959 | | - |
| 17 | Total Rents | 507 | 18,444 | 18,429 | 222,910 | | - |
| 18 | Total Steam Production Expense | | 1,307,383 | 1,068,749 | 13,244,740 | - | - |
| 19 | | | | | | | |
| 20 | Steam Production Maintenance | | | | | | |
| 21 | Total Maintenance Supervision and Engineering | 510 | (5,121) | 102,189 | 813,616 | | - |
| 22 | Total Maintenance of Structures | 511 | 299,573 | 313,341 | 3,096,927 | | - |
| 23 | Total Maintenance of Boiler Plant | 512 | 691,290 | 468,846 | 5,755,144 | | - |
| 24 | Total Maintenance of Electric Plant | 513 | 78,969 | 226,590 | 1,233,526 | | - |
| 25 | Total Maintenance of Misc. Electric Plant | 514 | 102,826 | 71,876 | 1,025,747 | | - |
| 26 | Total Steam Production Maintenance Subtotal | | 1,167,536 | 1,182,841 | 11,924,960 | - | - |
| 27 | | | | | | | |
| 28 | Total Steam Production O&M | | 2,474,920 | 2,251,590 | 25,169,700 | - | - |
| 29 | | | | | | | |

| | A | B | M | N | O | P | Q |
|---|---|---|---|---|---|---|---|
| 1 | **PNM Exhibit RNG-4** | | | | | | |
| 2 | **Schedule H-1** | | | | | | |
| 3 | **Operations and Maintenance Expense** | | | | | | |
| 4 | **Base Period Ending 6/30/2026** | | | | | | |
| 5 | **Test Period Ending 9/30/2028** | | | | | | |
| 6 | **Base Period data is historical information from the Company's Books and Records** | | | | | | |
| 7 | O&M Model Lead Sheet | | | | | | |
| 8 | | | | | | | **Column P** |
| 9 | **Descriptions** | **FERC** | **May-26** | **Jun-26** | **Total Company Base Period** | **Reclass Adjustments** | **Total Company COS Reclassification Adjustments** |
| 30 | Nuclear Production Operation | | | | | | |
| 31 | Total Operation Supervision and Engineering | 517 | 606,533 | 501,906 | 6,828,575 | | - |
| 32 | Total Coolants and Water | 519 | 470,823 | 483,281 | 5,612,458 | | - |
| 33 | Total Steam Expenses | 520 | 196,024 | 207,196 | 2,864,756 | | - |
| 34 | Total Electric Expenses | 523 | 220,094 | 509,580 | 3,850,425 | | - |
| 35 | Total Misc. Nuclear Power Expenses, excluding PV 1&2 Decommissioning and CE Credit | 524 | 1,589,663 | 1,121,850 | 11,155,092 | | - |
| 36 | Total Misc. Nuclear Power Expenses - PV 1&2 Decommissioning and CE Credit | 524 | - | - | - | | - |
| 37 | Total Rents - Nuclear, excluding PV 1&2 Prudency Audit and Excess Gain Amortization | 525 | - | - | 53,124 | | - |
| 38 | Total Rents-Nuclear - PV 1&2 Prudency Audit | 525 | - | - | - | | - |
| 39 | Total Rents-Nuclear - PV 1&2 Excess Gain Amortization | 525 | (3,319) | (3,319) | (39,828) | | - |
| 40 | Total Nuclear Production Operation | | 3,079,817 | 2,820,495 | 30,324,601 | - | - |
| 41 | | | | | | | |
| 42 | Nuclear Production Maintenance | | | | | | |
| 43 | Total Maintenance Supervision and Engineering | 528 | 107,752 | (14,160) | 1,931,217 | | - |
| 44 | Total Maintenance of Structures | 529 | 46,708 | 76,547 | 872,444 | | - |
| 45 | Total Maintenance of Reactor Plant | 530 | 131,743 | 162,743 | 4,261,254 | | - |
| 46 | Total Maintenance of Electric Plant | 531 | 396,519 | 247,966 | 5,922,286 | | - |
| 47 | Total Maintenance of Misc. Nuclear Plant | 532 | 59,631 | 84,590 | 1,043,487 | | - |
| 48 | Palo Verde 3 - Nuclear Production | 517,519-556 | - | - | - | | - |
| 49 | Total Nuclear Production Maintenance | | 742,353 | 557,686 | 14,030,687 | - | - |
| 50 | | | | | | | |
| 51 | Total Nuclear Production O&M | | 3,822,170 | 3,378,181 | 44,355,288 | - | - |

| | A | B | M | N | O | P | Q |
|---|---|---|---|---|---|---|---|
| 1 | **PNM Exhibit RNG-4** | | | | | | |
| 2 | **Schedule H-1** | | | | | | |
| 3 | **Operations and Maintenance Expense** | | | | | | |
| 4 | **Base Period Ending 6/30/2026** | | | | | | |
| 5 | **Test Period Ending 9/30/2028** | | | | | | |
| 6 | **Base Period data is historical information from the Company's Books and Records** | | | | | | |
| 7 | O&M Model Lead Sheet | | | | | | |
| 8 | | | | | | | **Column P** |
| 9 | **Descriptions** | **FERC** | **May-26** | **Jun-26** | **Total Company Base Period** | **Reclass Adjustments** | **Total Company COS Reclassification Adjustments** |
| 52 | | | | | | | |
| 53 | Other Production Operation | | | | | | |
| 54 | Total Operation Supervision and Engineering | 546 | 315,390 | 324,132 | 4,951,623 | | - |
| 55 | Total Misc. Other Power Expenses | 549 | - | - | (6,045) | | - |
| 56 | Total Misc. Other Power Expenses-Renew | 549-Renew | - | - | 315 | | - |
| 57 | Total Other Production Operation | | 315,390 | 324,132 | 4,945,893 | - | - |
| 58 | | | | | | | |
| 59 | Other Production Maintenance | | | | | | |
| 60 | Total Maintenance of Structures | 552 | 31,462 | 130,900 | 1,672,049 | | - |
| 61 | Total Maintenance of Gen and Electric Plant | 553 | 466,452 | 505,938 | 8,805,610 | | - |
| 62 | Total Maintenance of Gen and Electric Plant-Renew | 553-Renew | - | - | - | | - |
| 63 | Total System Control and Load Dispatching | 556 | 532,910 | 298,716 | 6,547,915 | | - |
| 64 | Total Other Production Maintenance | | 1,030,824 | 935,554 | 17,025,574 | - | - |
| 65 | | | | | | | |
| 66 | Total Other Production O&M | | 1,346,215 | 1,259,686 | 21,971,467 | - | - |
| 67 | | | | | | | |
| 68 | Solar Production Operations and Maintenance | | | | | | |
| 69 | Total Generation & Plant OpEx-Solar | 558.2 | 4,994 | 75,567 | 596,769 | | - |
| 70 | Total Generation & Plant OpEx-Solar - Renewables | 558.2 Renew | 30,074 | 214,356 | 1,421,657 | | - |
| 71 | Total Maintenance -Solar Panels, Structures, & Equipment | 558.7 | - | 120,437 | 223,760 | | - |
| 72 | Total Maintenance -Solar Panels, Structures, & Equipment - Energy Storage Transmission | 558.7 Energy Storage Tran | - | - | - | | - |
| 73 | Total Maintenance -Solar Panels, Structures, & Equipment - Battery Storage | 558.7 Energy Storage Dist | - | - | 2,320 | | - |
| 74 | Total Maintenance -Solar Panels, Structures, & Equipment - Battery | 558.7 Renew | - | 297,428 | 1,397,318 | | - |
| 75 | Total Solar Production O&M | | 35,068 | 707,788 | 3,641,824 | - | - |
| 76 | | | | | | | |
| 77 | Total Non-Fuel Production O&M | | 7,678,373 | 7,597,246 | 95,138,279 | - | - |
| 78 | | | | | | | |
| 79 | Energy Storage Operations and Maintenance | | | | | | |
| 80 | Total Maintenance-Storage Eqp, Struc Total- Energy Storage | 578.2 | (2) | 637 | 1,117 | | - |
| 81 | Maintenance-Storage Eqp, Struc Total - Energy Storage Transmission | 578.2-Energy Storage Tran | - | - | - | | - |
| 82 | Maintenance-Storage Eqp, Struc Total - Energy Storage Distribution | 578.2-Energy Storage Dist. | 3,736 | 3,736 | 80,171 | | - |
| 83 | Total Energy Storage Operations and Maintenance | | 3,734 | 4,372 | 81,288 | - | - |
| 84 | | | | | | | |

| | A | B | M | N | O | P | Q |
|---|---|---|---|---|---|---|---|
| 1 | **PNM Exhibit RNG-4** | | | | | | |
| 2 | **Schedule H-1** | | | | | | |
| 3 | **Operations and Maintenance Expense** | | | | | | |
| 4 | **Base Period Ending 6/30/2026** | | | | | | |
| 5 | **Test Period Ending 9/30/2028** | | | | | | |
| 6 | **Base Period data is historical information from the Company's Books and Records** | | | | | | |
| 7 | O&M Model Lead Sheet | | | | | | |
| 8 | | | | | | | **Column P** |
| 9 | **Descriptions** | **FERC** | **May-26** | **Jun-26** | **Total Company Base Period** | **Reclass Adjustments** | **Total Company COS Reclassification Adjustments** |
| 85 | Fuel Production O&M | | | | | | |
| 86 | Coal Fuel Burn | 501 | 2,993,918 | 3,799,681 | 45,523,594 | | - |
| 87 | Steam Fuel Handling and Disposal | 501 | 280,132 | 306,062 | 2,943,810 | | - |
| 88 | Tot Nuclear Fuel Exp | 518 | 1,339,991 | 1,443,594 | 15,342,950 | | - |
| 89 | Total Nuclear Disposal | 518 | 278,824 | 18,886 | 1,643,724 | | - |
| 90 | Total Gas Generation | 547 | (1,580,929) | 1,521,113 | 15,550,914 | | - |
| 91 | Wind PPAs | 555 | 3,440,018 | 2,662,131 | 28,300,658 | | - |
| 92 | Geothermal PPA | 555 | 671,308 | 510,849 | 7,794,205 | | - |
| 93 | Total Purchased Power Energy | 555 | 11,185,146 | 12,581,190 | 180,339,489 | | - |
| 94 | Spinning Reserves | 555 | - | - | - | | - |
| 95 | ESA Fuel Reclass | 555 | - | - | - | | - |
| 96 | Total Fuel Production O&M | | 18,608,409 | 22,843,506 | 297,439,345 | - | - |
| 97 | | | | | | | |
| 98 | Off-system Sales | 447.3 | (1,971,994) | (6,136,985) | (73,534,016) | | - |
| 99 | Off-system Sales - Other | | - | - | - | | - |
| 100 | Physical Sales of Gas (under FAC hedge plan) | 447.7 | - | - | - | | - |
| 101 | EDAM | 456.1 | - | - | - | | - |
| 102 | Short Term PTP and Transmission Service | 456.1 | - | - | - | | - |
| 103 | Total Other Fuel | | (1,971,994) | (6,136,985) | (73,534,016) | - | - |

| | A | B | M | N | O | P | Q |
|---|---|---|---|---|---|---|---|
| 1 | **PNM Exhibit RNG-4** | | | | | | |
| 2 | **Schedule H-1** | | | | | | |
| 3 | **Operations and Maintenance Expense** | | | | | | |
| 4 | **Base Period Ending 6/30/2026** | | | | | | |
| 5 | **Test Period Ending 9/30/2028** | | | | | | |
| 6 | **Base Period data is historical information from the Company's Books and Records** | | | | | | |
| 7 | O&M Model Lead Sheet | | | | | | |
| 8 | | | | | | | **Column P** |
| 9 | **Descriptions** | **FERC** | **May-26** | **Jun-26** | **Total Company Base Period** | **Reclass Adjustments** | **Total Company COS Reclassification Adjustments** |
| 104 | | | | | | | |
| 105 | Other Production - Fuel Related | | | | | | |
| 106 | Gas Plants Fuel Transportation | 547 | 1,212,859 | 1,202,759 | 12,995,615 | | - |
| 107 | Gas PPA - Valencia - Demand | 555 | 1,732,318 | 1,737,145 | 20,612,692 | | - |
| 108 | Energy Storage Agreement - Demand | 555 | 8,469,017 | 8,364,913 | 82,142,228 | | - |
| 109 | Purchase power for Economy Service Customer | 555 | 603,999 | 1,173,323 | 12,920,780 | | - |
| 110 | Purchased power for Rate 36B | 555 | 7,215,420 | 7,238,917 | 70,640,117 | | - |
| 111 | FPPCAC deferral | 501.1,555.4 | (983,317) | 1,033,811 | 33,195,861 | | - |
| 112 | Rec Purchases and Renewable Energy Amortization | 555 | 316,040 | 287,143 | 3,306,686 | | - |
| 113 | City of Gallup - Mandoza Station Charges | 555 | - | - | - | | - |
| 114 | Coal Mine Decommissioning | 501.15 | 176,252 | 176,252 | 2,166,667 | | - |
| 115 | Broker Fees | 557 | 19,195 | 19,705 | 231,875 | | - |
| 116 | Total Other Production - Fuel Related | | 18,761,783 | 21,233,968 | 238,212,522 | - | - |
| 117 | | | | | | | |
| 118 | Transmission Operation | | | | | | |
| 119 | Total Operation Supervision and Engineering | 560 | (52,724) | 298,237 | (225,024) | | - |
| 120 | Total Load Dispatching | 561 | 67,511 | 39,372 | 880,394 | | - |
| 121 | Total Station Expenses | 562 | 147,126 | 78,314 | 1,557,530 | | - |
| 122 | Total Overhead Lines Expenses | 563 | 11,391 | 3,433 | 237,782 | | - |
| 123 | Total Misc. Transmission Expenses | 566 | 123,692 | 76,494 | 3,177,126 | | - |
| 124 | Total Rents | 567 | 1,397,409 | 1,397,836 | 16,752,521 | | - |
| 125 | Total Transmission Operation | | 1,694,406 | 1,893,686 | 22,380,330 | - | - |
| 126 | | | | | | | |

| | A | B | M | N | O | P | Q |
|---|---|---|---|---|---|---|---|
| 1 | **PNM Exhibit RNG-4** | | | | | | |
| 2 | **Schedule H-1** | | | | | | |
| 3 | **Operations and Maintenance Expense** | | | | | | |
| 4 | **Base Period Ending 6/30/2026** | | | | | | |
| 5 | **Test Period Ending 9/30/2028** | | | | | | |
| 6 | **Base Period data is historical information from the Company's Books and Records** | | | | | | |
| 7 | O&M Model Lead Sheet | | | | | | |
| 8 | | | | | | | **Column P** |
| 9 | **Descriptions** | **FERC** | **May-26** | **Jun-26** | **Total Company Base Period** | **Reclass Adjustments** | **Total Company COS Reclassification Adjustments** |
| 127 | Transmission Maintenance | | | | | | |
| 128 | Total Maintenance Supervision and Engineering | 568 | 4,397 | 1,816 | 31,804 | | - |
| 129 | Total Maintenance of Structures | 569 | 66,915 | 188,666 | 1,756,174 | | - |
| 130 | Total Maintenance of Station Equipment | 570 | 324,913 | 446,452 | 4,204,287 | | - |
| 131 | Total Maintenance of Overhead Lines | 571 | 45,148 | 56,965 | 950,831 | | - |
| 132 | Total Maintenance of Underground Lines | 572 | - | - | - | | - |
| 133 | Total Maintenance of Misc. Transm Plant | 573 | - | - | - | | - |
| 134 | Total Maintenance Transmission Plant | 574 | 1,432 | - | 9,537 | | - |
| 135 | Incremental FERC Rate - Transmission O&M | 560-564,566-574 | - | - | - | | - |
| 136 | Total Transmission Maintenance | | 442,805 | 693,899 | 6,952,634 | - | - |
| 137 | | | | | | | |
| 138 | Transmission O&M by Others (565) | | | | | | |
| 139 | Total Transmission by Others | 565 | 1,885,237 | 2,557,036 | 26,789,872 | | - |
| 140 | Total Transmission O&M by Others (565) | | 1,885,237 | 2,557,036 | 26,789,872 | - | - |
| 141 | | | | | | | |
| 142 | Total Transmission O&M | | 4,022,447 | 5,144,621 | 56,122,837 | - | - |
| 143 | | | | | | | |

| | A | B | M | N | O | P | Q |
|---|---|---|---|---|---|---|---|
| 1 | **PNM Exhibit RNG-4** | | | | | | |
| 2 | **Schedule H-1** | | | | | | |
| 3 | **Operations and Maintenance Expense** | | | | | | |
| 4 | **Base Period Ending 6/30/2026** | | | | | | |
| 5 | **Test Period Ending 9/30/2028** | | | | | | |
| 6 | **Base Period data is historical information from the Company's Books and Records** | | | | | | |
| 7 | O&M Model Lead Sheet | | | | | | |
| 8 | | | | | | | **Column P** |
| 9 | **Descriptions** | **FERC** | **May-26** | **Jun-26** | **Total Company Base Period** | **Reclass Adjustments** | **Total Company COS Reclassification Adjustments** |
| 144 | Distribution Operation | | | | | | |
| 145 | Total Operation Supervision and Engineering | 580 | 72,898 | 213,183 | 1,936,997 | | - |
| 146 | Total Station Expenses | 582 | 49,184 | 142,948 | 1,037,839 | | - |
| 147 | Total Overhead Lines Expenses | 583 | 282,346 | 405,670 | 3,504,187 | | - |
| 148 | Total Underground Lines Expenses | 584 | 85,002 | 98,830 | 1,043,973 | | - |
| 149 | Total Street Lighting & Signal System Exp | 585 | - | - | - | | - |
| 150 | Total Meter Expenses | 586 | 291,782 | 244,523 | 3,515,630 | | - |
| 151 | Total Meter Expenses - Grid Mod | 586 - Grid Mod | - | - | - | | - |
| 152 | Total Misc. Expenses | 588 | 613,248 | 239,965 | 8,310,680 | | - |
| 153 | Total Rents | 589 | 60,555 | 60,555 | 829,871 | | - |
| 154 | Total Distribution Operation | | 1,455,015 | 1,405,674 | 20,179,176 | - | - |
| 155 | | | | | | | |
| 156 | Distribution Maintenance | | | | | | |
| 157 | Total Maintenance Supervision and Engineering | 590 | 35,689 | 152,630 | 870,009 | | - |
| 158 | Total Maintenance of Structures | 591 | 5,922 | 1,957 | 32,242 | | - |
| 159 | Total Maintenance of Station Equipment | 592 | 232,401 | 94,416 | 2,258,729 | | - |
| 160 | Total Maintenance of Overhead Lines | 593 | 488,705 | 781,867 | 9,938,081 | | - |
| 161 | Total Maintenance of Underground Lines | 594 | 153,798 | 233,425 | 2,591,100 | | - |
| 162 | Total Maintenance of Line Transformers | 595 | - | - | - | | - |
| 163 | Total Maintenance of Street Lighting & Signal Systems | 596 | 78,334 | 79,961 | 878,714 | | - |
| 164 | Total Maintenance of Meters | 597 | 72,611 | 78,397 | 720,177 | | - |
| 165 | Total Maintenance of Meters - Grid Mod | 597 - Grid Mod | - | - | - | | - |
| 166 | Total Maintenance of Misc. Distribution Plant | 598 | - | - | - | | - |
| 167 | Total Other Distribution O&M - Grid Mod | 580-598 Grid Mod | 217 | (0) | 246 | | - |
| 168 | Total Distribution Maintenance | | 1,067,678 | 1,422,653 | 17,289,299 | - | - |

| | A | B | M | N | O | P | Q |
|---|---|---|---|---|---|---|---|
| 1 | **PNM Exhibit RNG-4** | | | | | | |
| 2 | **Schedule H-1** | | | | | | |
| 3 | **Operations and Maintenance Expense** | | | | | | |
| 4 | **Base Period Ending 6/30/2026** | | | | | | |
| 5 | **Test Period Ending 9/30/2028** | | | | | | |
| 6 | **Base Period data is historical information from the Company's Books and Records** | | | | | | |
| 7 | O&M Model Lead Sheet | | | | | | |
| 8 | | | | | | | **Column P** |
| 9 | **Descriptions** | **FERC** | **May-26** | **Jun-26** | **Total Company Base Period** | **Reclass Adjustments** | **Total Company COS Reclassification Adjustments** |
| 169 | | | | | | | |
| 170 | Total Distribution O&M | | 2,522,693 | 2,828,327 | 37,468,475 | - | - |
| 171 | | | | | | | |
| 172 | Customer Accounting Expenses | | | | | | |
| 173 | Total Supervision | 901 | (18,539) | (22,291) | (234,519) | | - |
| 174 | Total Meter Reading Expenses | 902 | 723,259 | 859,731 | 8,835,322 | | - |
| 175 | Total Customer Records and Collection Exp | 903 | 957,652 | 1,082,810 | 11,717,705 | | - |
| 176 | Total Uncollectible Accounts | 904 | 439,681 | 520,211 | 5,248,286 | | - |
| 177 | Total Misc. Customer Accounts Expenses | 905 | - | - | - | | - |
| 178 | Total Customer Accounting Expenses - Grid Mod | 901-905 | - | - | - | | - |
| 179 | Total Customer Accounting Expenses | | 2,102,053 | 2,440,461 | 25,566,793 | - | - |
| 180 | | | | | | | |
| 181 | Customer Service & Informational Exp | | | | | | |
| 182 | Total Customer Service & Informational Exp | 906 | 22,180 | 55,781 | 171,816 | | - |
| 183 | Total Customer Assistance Expenses | 908 | 81,967 | 123,267 | 1,265,587 | | - |
| 184 | Total Informational & Instructional Advert Exp | 909 | - | - | 107,995 | | - |
| 185 | Total Miscellaneous Customer Service & Informational Expenses | 910 | 298 | 124 | 422 | | - |
| 186 | Total Customer Service & Inform Exp | | 104,445 | 179,172 | 1,545,820 | - | - |
| 187 | | | | | | | |

| | A | B | M | N | O | P | Q |
|---|---|---|---|---|---|---|---|
| 1 | **PNM Exhibit RNG-4** | | | | | | |
| 2 | **Schedule H-1** | | | | | | |
| 3 | **Operations and Maintenance Expense** | | | | | | |
| 4 | **Base Period Ending 6/30/2026** | | | | | | |
| 5 | **Test Period Ending 9/30/2028** | | | | | | |
| 6 | **Base Period data is historical information from the Company's Books and Records** | | | | | | |
| 7 | O&M Model Lead Sheet | | | | | | |
| 8 | | | | | | | **Column P** |
| 9 | **Descriptions** | **FERC** | **May-26** | **Jun-26** | **Total Company Base Period** | **Reclass Adjustments** | **Total Company COS Reclassification Adjustments** |
| 188 | Sales Expenses | | | | | | |
| 189 | Total Demonstrating and Selling Expenses - Non Production | 912 | - | - | - | | - |
| 190 | Total Demonstrating and Selling Expenses - Production | 912 | 441,680 | 473,390 | 5,042,201 | | - |
| 191 | Total Advertising Expense | 913 | - | - | - | | - |
| 192 | Total Sales Expenses | | 441,680 | 473,390 | 5,042,201 | - | - |
| 193 | | | | | | | |
| 194 | Administrative & General Expenses | | | | | | |
| 195 | Administrative & General Exp - Operation | | | | | | |
| 196 | | | | | | | |
| 197 | Total Administrative & General Salaries | 920 | 272,146 | 246,333 | 3,462,162 | | - |
| 198 | Total Office Supplies and Expenses | 921 | 129,170 | 137,642 | 1,759,614 | | - |
| 199 | Total Admin Expenses Transferred--Credit | 922 | (1,329,107) | (2,183,317) | (21,634,599) | | - |
| 200 | Total Production Related - Shared Services | 922.9 | 1,759,121 | 1,690,512 | 24,006,416 | | - |
| 201 | Total Transmission Related - Shared Services | 922.9 | 1,617,885 | 1,554,608 | 20,153,481 | | - |
| 202 | Total Distribution Related - Shared Services | 922.9 | 7,379,800 | 6,133,477 | 87,572,831 | | - |
| 203 | Total Outside Services Employed | 923 | 187,215 | 727,509 | 5,112,093 | | - |
| 204 | Total Property Insurance | 924 | 261,515 | 56,101 | 1,757,492 | | - |
| 205 | Total Injuries and Damages | 925 | 780,756 | 349,893 | 9,154,038 | | - |
| 206 | Total Employee Pensions and Benefits | 926 | 1,489,234 | 1,350,629 | 74,059,266 | | - |
| 207 | Total Regulatory Commission Expenses | 928 | 3,629,685 | 4,193,069 | 47,021,191 | | - |
| 208 | Total Regulatory Commission Expenses - Rate Case Expense | 928 | - | - | - | | - |
| 209 | Total General Advertising/Misc. General Exp | 930 | 423,924 | 999,568 | 12,723,546 | | - |
| 210 | Total Rents - Distribution | 931 | 21,086 | 22,494 | 258,677 | | - |
| 211 | Total Gas A&M Maintenance-Transmission | 932 | - | - | - | | - |
| 212 | Total Administrative & General Expenses | | 16,622,432 | 15,278,519 | 265,406,209 | - | - |
| 213 | | | | | | | |

| | A | B | M | N | O | P | Q |
|---|---|---|---|---|---|---|---|
| 1 | **PNM Exhibit RNG-4** | | | | | | |
| 2 | **Schedule H-1** | | | | | | |
| 3 | **Operations and Maintenance Expense** | | | | | | |
| 4 | **Base Period Ending 6/30/2026** | | | | | | |
| 5 | **Test Period Ending 9/30/2028** | | | | | | |
| 6 | **Base Period data is historical information from the Company's Books and Records** | | | | | | |
| 7 | O&M Model Lead Sheet | | | | | | |
| 8 | | | | | | | **Column P** |
| 9 | **Descriptions** | **FERC** | **May-26** | **Jun-26** | **Total Company Base Period** | **Reclass Adjustments** | **Total Company COS Reclassification Adjustments** |
| 214 | Admin & General Exp - Maintenance | | | | | | |
| 215 | Total Maintenance of General Plant | 935 | 259,403 | 218,115 | 2,743,117 | | - |
| 216 | Total Admin & General - Maintenance | | 259,403 | 218,115 | 2,743,117 | - | - |
| 217 | | | | | | | |
| 218 | Renewables - A&G (920-935) | 920-935 | 29,338 | 32,802 | 371,202 | | - |
| 219 | Grid Mod - A&G (920-935) | 920-935 | 0 | 62,711 | 457,222 | | - |
| 220 | Energy Storage Transmission - A&G (920-935) | 920-935 | - | - | - | | - |
| 221 | Energy Storage Distribution - A&G (920-935) | 920-935 | 1,870 | 2,289 | 24,341 | | - |
| 222 | Total Admin & General - Renewables and Grid Mod | | 31,209 | 97,801 | 852,765 | - | - |
| 223 | | | | | | | |
| 224 | Total Admin and General Expenses | | 16,913,043 | 15,594,434 | 269,002,091 | - | - |
| 225 | | | | | | | |
| 226 | Total Operation and Maintenance Exp | | 69,186,667 | 72,202,511 | 952,085,636 | - | - |
| 227 | | | | | | | |
| 228 | This schedule is sponsored by PNM Witness Gutierrez | | | | | | |
| 229 | Please see H1 Base and Test Notes Page for corresponding notes. | | | | | | |

| | A | B | R | S | T | U |
|---|---|---|---|---|---|---|
| 1 | **PNM Exhibit RNG-4** | | | | | |
| 2 | **Schedule H-1** | | | | | |
| 3 | **Operations and Maintenance Expense** | | | | | |
| 4 | **Base Period Ending 6/30/2026** | | | | | |
| 5 | **Test Period Ending 9/30/2028** | | | | | |
| 6 | **Base Period data is historical information from the Company's Books and Records** | | | | | |
| 7 | O&M Model Lead Sheet | | | | | |
| 8 | | | **Column O + Column Q** | **OM-2, Column D for O&M; WP Fuel-1, Column N for Fuel** | **Column R + Column S** | **OM-10, Column CG for O&M; WP Fuel-2, Column O for Fuel** |
| 9 | **Descriptions** | **FERC** | **Total Company Unadjusted Base Period** | **Base Period Adjustments** | **Adjusted Base Period** | **Linkage Period One 7/2026 - 6/2027** |
| 10 | Non-Fuel Production O&M | | | | | |
| 11 | Steam Production Operation | | | | | |
| 12 | Total Operation Supervision and Engineering | 500 | 2,202,157 | (125,726) | 2,076,431 | 2,133,307 |
| 13 | Total Steam Expenses | 502 | 7,397,993 | - | 7,397,993 | 7,619,933 |
| 14 | Total Steam from Other Sources | 503 | - | - | - | - |
| 15 | Total Electric Expenses | 505 | 1,236,721 | 54,860 | 1,291,581 | 1,305,757 |
| 16 | Total Misc. Steam Power Expenses | 506 | 2,184,959 | (612,399) | 1,572,561 | 1,615,461 |
| 17 | Total Rents | 507 | 222,910 | - | 222,910 | 229,597 |
| 18 | Total Steam Production Expense | | 13,244,740 | (683,264) | 12,561,476 | 12,904,056 |
| 19 | | | | | | |
| 20 | Steam Production Maintenance | | | | | |
| 21 | Total Maintenance Supervision and Engineering | 510 | 813,616 | (25,857) | 787,760 | 807,271 |
| 22 | Total Maintenance of Structures | 511 | 3,096,927 | 97,185 | 3,194,112 | 3,282,128 |
| 23 | Total Maintenance of Boiler Plant | 512 | 5,755,144 | 1,217,179 | 6,972,322 | 7,154,796 |
| 24 | Total Maintenance of Electric Plant | 513 | 1,233,526 | 1,272,933 | 2,506,460 | 2,581,207 |
| 25 | Total Maintenance of Misc. Electric Plant | 514 | 1,025,747 | 8,824 | 1,034,571 | 1,065,608 |
| 26 | Total Steam Production Maintenance Subtotal | | 11,924,960 | 2,570,265 | 14,495,225 | 14,891,010 |
| 27 | | | | | | |
| 28 | Total Steam Production O&M | | 25,169,700 | 1,887,001 | 27,056,701 | 27,795,065 |
| 29 | | | | | | |

| | A | B | R | S | T | U |
|---|---|---|---|---|---|---|
| 1 | **PNM Exhibit RNG-4** | | | | | |
| 2 | **Schedule H-1** | | | | | |
| 3 | **Operations and Maintenance Expense** | | | | | |
| 4 | **Base Period Ending 6/30/2026** | | | | | |
| 5 | **Test Period Ending 9/30/2028** | | | | | |
| 6 | **Base Period data is historical information from the Company's Books and Records** | | | | | |
| 7 | O&M Model Lead Sheet | | | | | |
| 8 | | | **Column O + Column Q** | **OM-2, Column D for O&M; WP Fuel-1, Column N for Fuel** | **Column R + Column S** | **OM-10, Column CG for O&M; WP Fuel-2, Column O for Fuel** |
| 9 | **Descriptions** | **FERC** | **Total Company Unadjusted Base Period** | **Base Period Adjustments** | **Adjusted Base Period** | **Linkage Period One 7/2026 - 6/2027** |
| 30 | Nuclear Production Operation | | | | | |
| 31 | Total Operation Supervision and Engineering | 517 | 6,828,575 | (9,252) | 6,819,323 | 7,023,568 |
| 32 | Total Coolants and Water | 519 | 5,612,458 | - | 5,612,458 | 5,780,831 |
| 33 | Total Steam Expenses | 520 | 2,864,756 | (216,530) | 2,648,226 | 2,727,673 |
| 34 | Total Electric Expenses | 523 | 3,850,425 | - | 3,850,425 | 3,965,938 |
| 35 | Total Misc. Nuclear Power Expenses, excluding PV 1&2 Decommissioning and CE Credit | 524 | 11,155,092 | (57) | 11,155,035 | 11,489,686 |
| 36 | Total Misc. Nuclear Power Expenses - PV 1&2 Decommissioning and CE Credit | 524 | - | - | - | - |
| 37 | Total Rents - Nuclear, excluding PV 1&2 Prudency Audit and Excess Gain Amortization | 525 | 53,124 | - | 53,124 | 54,718 |
| 38 | Total Rents-Nuclear - PV 1&2 Prudency Audit | 525 | - | - | - | - |
| 39 | Total Rents-Nuclear - PV 1&2 Excess Gain Amortization | 525 | (39,828) | - | (39,828) | (3,811) |
| 40 | Total Nuclear Production Operation | | 30,324,601 | (225,838) | 30,098,763 | 31,038,602 |
| 41 | | | | | | |
| 42 | Nuclear Production Maintenance | | | | | |
| 43 | Total Maintenance Supervision and Engineering | 528 | 1,931,217 | (259,341) | 1,671,876 | 1,722,032 |
| 44 | Total Maintenance of Structures | 529 | 872,444 | (133,559) | 738,886 | 761,052 |
| 45 | Total Maintenance of Reactor Plant | 530 | 4,261,254 | (225,231) | 4,036,023 | 4,157,103 |
| 46 | Total Maintenance of Electric Plant | 531 | 5,922,286 | (1,022,978) | 4,899,308 | 5,046,287 |
| 47 | Total Maintenance of Misc. Nuclear Plant | 532 | 1,043,487 | 31,170 | 1,074,657 | 1,106,896 |
| 48 | Palo Verde 3 - Nuclear Production | 517,519-556 | - | - | - | - |
| 49 | Total Nuclear Production Maintenance | | 14,030,687 | (1,609,939) | 12,420,748 | 12,793,371 |
| 50 | | | | | | |
| 51 | Total Nuclear Production O&M | | 44,355,288 | (1,835,777) | 42,519,511 | 43,831,973 |

| | A | B | R | S | T | U |
|---|---|---|---|---|---|---|
| 1 | **PNM Exhibit RNG-4** | | | | | |
| 2 | **Schedule H-1** | | | | | |
| 3 | **Operations and Maintenance Expense** | | | | | |
| 4 | **Base Period Ending 6/30/2026** | | | | | |
| 5 | **Test Period Ending 9/30/2028** | | | | | |
| 6 | **Base Period data is historical information from the Company's Books and Records** | | | | | |
| 7 | O&M Model Lead Sheet | | | | | |
| 8 | | | **Column O + Column Q** | **OM-2, Column D for O&M; WP Fuel-1, Column N for Fuel** | **Column R + Column S** | **OM-10, Column CG for O&M; WP Fuel-2, Column O for Fuel** |
| 9 | **Descriptions** | **FERC** | **Total Company Unadjusted Base Period** | **Base Period Adjustments** | **Adjusted Base Period** | **Linkage Period One 7/2026 - 6/2027** |
| 52 | | | | | | |
| 53 | Other Production Operation | | | | | |
| 54 | Total Operation Supervision and Engineering | 546 | 4,951,623 | (472,791) | 4,478,832 | 4,599,720 |
| 55 | Total Misc. Other Power Expenses | 549 | (6,045) | 6,045 | - | - |
| 56 | Total Misc. Other Power Expenses-Renew | 549-Renew | 315 | - | 315 | 324 |
| 57 | Total Other Production Operation | | 4,945,893 | (466,746) | 4,479,147 | 4,600,044 |
| 58 | | | | | | |
| 59 | Other Production Maintenance | | | | | |
| 60 | Total Maintenance of Structures | 552 | 1,672,049 | (267,570) | 1,404,478 | 1,440,559 |
| 61 | Total Maintenance of Gen and Electric Plant | 553 | 8,805,610 | 2,103,917 | 10,909,527 | 11,176,299 |
| 62 | Total Maintenance of Gen and Electric Plant-Renew | 553-Renew | - | - | - | - |
| 63 | Total System Control and Load Dispatching | 556 | 6,547,915 | 463,091 | 7,011,006 | 7,131,408 |
| 64 | Total Other Production Maintenance | | 17,025,574 | 2,299,437 | 19,325,011 | 19,748,266 |
| 65 | | | | | | |
| 66 | Total Other Production O&M | | 21,971,467 | 1,832,691 | 23,804,158 | 24,348,310 |
| 67 | | | | | | |
| 68 | Solar Production Operations and Maintenance | | | | | |
| 69 | Total Generation & Plant OpEx-Solar | 558.2 | 596,769 | (31,759) | 565,010 | 581,107 |
| 70 | Total Generation & Plant OpEx-Solar - Renewables | 558.2 Renew | 1,421,657 | (190) | 1,421,467 | 1,310,818 |
| 71 | Total Maintenance -Solar Panels, Structures, & Equipment | 558.7 | 223,760 | - | 223,760 | 230,473 |
| 72 | Total Maintenance -Solar Panels, Structures, & Equipment - Energy Storage Transmission | 558.7 Energy Storage Tran | - | - | - | - |
| 73 | Total Maintenance -Solar Panels, Structures, & Equipment - Battery Storage | 558.7 Energy Storage Dist | 2,320 | - | 2,320 | 2,389 |
| 74 | Total Maintenance -Solar Panels, Structures, & Equipment - Battery | 558.7 Renew | 1,397,318 | - | 1,397,318 | 1,439,238 |
| 75 | Total Solar Production O&M | | 3,641,824 | (31,949) | 3,609,875 | 3,564,025 |
| 76 | | | | | | |
| 77 | Total Non-Fuel Production O&M | | 95,138,279 | 1,851,966 | 96,990,246 | 99,539,374 |
| 78 | | | | | | |
| 79 | Energy Storage Operations and Maintenance | | | | | |
| 80 | Total Maintenance-Storage Eqp, Struc Total- Energy Storage | 578.2 | 1,117 | (1,117) | - | - |
| 81 | Maintenance-Storage Eqp, Struc Total - Energy Storage Transmission | 578.2-Energy Storage Tran | - | - | - | - |
| 82 | Maintenance-Storage Eqp, Struc Total - Energy Storage Distribution | 578.2-Energy Storage Dist. | 80,171 | - | 80,171 | 82,338 |
| 83 | Total Energy Storage Operations and Maintenance | | 81,288 | (1,117) | 80,171 | 82,338 |
| 84 | | | | | | |

| | A | B | R | S | T | U |
|---|---|---|---|---|---|---|
| 1 | **PNM Exhibit RNG-4** | | | | | |
| 2 | **Schedule H-1** | | | | | |
| 3 | **Operations and Maintenance Expense** | | | | | |
| 4 | **Base Period Ending 6/30/2026** | | | | | |
| 5 | **Test Period Ending 9/30/2028** | | | | | |
| 6 | **Base Period data is historical information from the Company's Books and Records** | | | | | |
| 7 | O&M Model Lead Sheet | | | | | |
| 8 | | | **Column O + Column Q** | **OM-2, Column D for O&M; WP Fuel-1, Column N for Fuel** | **Column R + Column S** | **OM-10, Column CG for O&M; WP Fuel-2, Column O for Fuel** |
| 9 | **Descriptions** | **FERC** | **Total Company Unadjusted Base Period** | **Base Period Adjustments** | **Adjusted Base Period** | **Linkage Period One 7/2026 - 6/2027** |
| 85 | Fuel Production O&M | | | | | |
| 86 | Coal Fuel Burn | 501 | 45,523,594 | - | 45,523,594 | 66,119,402 |
| 87 | Steam Fuel Handling and Disposal | 501 | 2,943,810 | - | 2,943,810 | 1,978,215 |
| 88 | Tot Nuclear Fuel Exp | 518 | 15,342,950 | - | 15,342,950 | 16,391,302 |
| 89 | Total Nuclear Disposal | 518 | 1,643,724 | - | 1,643,724 | 866,288 |
| 90 | Total Gas Generation | 547 | 15,550,914 | - | 15,550,914 | 44,871,116 |
| 91 | Wind PPAs | 555 | 28,300,658 | - | 28,300,658 | 29,371,710 |
| 92 | Geothermal PPA | 555 | 7,794,205 | - | 7,794,205 | 3,752,828 |
| 93 | Total Purchased Power Energy | 555 | 180,339,489 | (24,585,773) | 155,753,716 | 92,370,719 |
| 94 | Spinning Reserves | 555 | - | - | - | 112,483 |
| 95 | ESA Fuel Reclass | 555 | - | | - | |
| 96 | Total Fuel Production O&M | | 297,439,345 | (24,585,773) | 272,853,572 | 255,834,064 |
| 97 | | | | | | |
| 98 | Off-system Sales | 447.3 | (73,534,016) | - | (73,534,016) | (74,377,944) |
| 99 | Off-system Sales - Other | | - | - | - | - |
| 100 | Physical Sales of Gas (under FAC hedge plan) | 447.7 | - | - | - | - |
| 101 | EDAM | 456.1 | - | (14,316,981) | (14,316,981) | (12,051,048) |
| 102 | Short Term PTP and Transmission Service | 456.1 | - | | - | - |
| 103 | Total Other Fuel | | (73,534,016) | (14,316,981) | (87,850,997) | (86,428,992) |

| | A | B | R | S | T | U |
|---|---|---|---|---|---|---|
| 1 | **PNM Exhibit RNG-4** | | | | | |
| 2 | **Schedule H-1** | | | | | |
| 3 | **Operations and Maintenance Expense** | | | | | |
| 4 | **Base Period Ending 6/30/2026** | | | | | |
| 5 | **Test Period Ending 9/30/2028** | | | | | |
| 6 | **Base Period data is historical information from the Company's Books and Records** | | | | | |
| 7 | O&M Model Lead Sheet | | | | | |
| 8 | | | **Column O + Column Q** | **OM-2, Column D for O&M; WP Fuel-1, Column N for Fuel** | **Column R + Column S** | **OM-10, Column CG for O&M; WP Fuel-2, Column O for Fuel** |
| 9 | **Descriptions** | **FERC** | **Total Company Unadjusted Base Period** | **Base Period Adjustments** | **Adjusted Base Period** | **Linkage Period One 7/2026 - 6/2027** |
| 104 | | | | | | |
| 105 | Other Production - Fuel Related | | | | | |
| 106 | Gas Plants Fuel Transportation | 547 | 12,995,615 | - | 12,995,615 | 13,548,410 |
| 107 | Gas PPA - Valencia - Demand | 555 | 20,612,692 | (329,890) | 20,282,802 | 20,015,659 |
| 108 | Energy Storage Agreement - Demand | 555 | 82,142,228 | - | 82,142,228 | 74,912,017 |
| 109 | Purchase power for Economy Service Customer | 555 | 12,920,780 | (12,920,780) | - | - |
| 110 | Purchased power for Rate 36B | 555 | 70,640,117 | (70,640,117) | - | - |
| 111 | FPPCAC deferral | 501.1,555.4 | 33,195,861 | (33,195,861) | - | - |
| 112 | Rec Purchases and Renewable Energy Amortization | 555 | 3,306,686 | - | 3,306,686 | 2,554,898 |
| 113 | City of Gallup - Mandoza Station Charges | 555 | - | - | - | - |
| 114 | Coal Mine Decommissioning | 501.15 | 2,166,667 | (2,166,667) | - | - |
| 115 | Broker Fees | 557 | 231,875 | - | 231,875 | 158,441 |
| 116 | Total Other Production - Fuel Related | | 238,212,522 | (119,253,315) | 118,959,206 | 111,189,424 |
| 117 | | | | | | |
| 118 | Transmission Operation | | | | | |
| 119 | Total Operation Supervision and Engineering | 560 | (225,024) | 185,008 | (40,015) | (82,221) |
| 120 | Total Load Dispatching | 561 | 880,394 | (49,555) | 830,839 | 838,414 |
| 121 | Total Station Expenses | 562 | 1,557,530 | (6,808) | 1,550,723 | 1,579,106 |
| 122 | Total Overhead Lines Expenses | 563 | 237,782 | (114,120) | 123,662 | 124,864 |
| 123 | Total Misc. Transmission Expenses | 566 | 3,177,126 | 129,569 | 3,306,695 | 3,398,343 |
| 124 | Total Rents | 567 | 16,752,521 | (554,288) | 16,198,233 | 17,436,464 |
| 125 | Total Transmission Operation | | 22,380,330 | (410,194) | 21,970,136 | 23,294,970 |
| 126 | | | | | | |

| | A | B | R | S | T | U |
|---|---|---|---|---|---|---|
| 1 | **PNM Exhibit RNG-4** | | | | | |
| 2 | **Schedule H-1** | | | | | |
| 3 | **Operations and Maintenance Expense** | | | | | |
| 4 | **Base Period Ending 6/30/2026** | | | | | |
| 5 | **Test Period Ending 9/30/2028** | | | | | |
| 6 | **Base Period data is historical information from the Company's Books and Records** | | | | | |
| 7 | O&M Model Lead Sheet | | | | | |
| 8 | | | **Column O + Column Q** | **OM-2, Column D for O&M; WP Fuel-1, Column N for Fuel** | **Column R + Column S** | **OM-10, Column CG for O&M; WP Fuel-2, Column O for Fuel** |
| 9 | **Descriptions** | **FERC** | **Total Company Unadjusted Base Period** | **Base Period Adjustments** | **Adjusted Base Period** | **Linkage Period One 7/2026 - 6/2027** |
| 127 | Transmission Maintenance | | | | | |
| 128 | Total Maintenance Supervision and Engineering | 568 | 31,804 | (10,239) | 21,565 | 21,922 |
| 129 | Total Maintenance of Structures | 569 | 1,756,174 | - | 1,756,174 | 1,808,859 |
| 130 | Total Maintenance of Station Equipment | 570 | 4,204,287 | (55,758) | 4,148,529 | 4,193,925 |
| 131 | Total Maintenance of Overhead Lines | 571 | 950,831 | (45,607) | 905,225 | 930,696 |
| 132 | Total Maintenance of Underground Lines | 572 | - | - | - | - |
| 133 | Total Maintenance of Misc. Transm Plant | 573 | - | - | - | - |
| 134 | Total Maintenance Transmission Plant | 574 | 9,537 | (4,243) | 5,294 | 5,342 |
| 135 | Incremental FERC Rate - Transmission O&M | 560-564,566-574 | - | 1,296,553 | 1,296,553 | 1,293,902 |
| 136 | Total Transmission Maintenance | | 6,952,634 | 1,180,706 | 8,133,340 | 8,254,647 |
| 137 | | | | | | |
| 138 | Transmission O&M by Others (565) | | | | | |
| 139 | Total Transmission by Others | 565 | 26,789,872 | 8,711,907 | 35,501,779 | 36,566,832 |
| 140 | Total Transmission O&M by Others (565) | | 26,789,872 | 8,711,907 | 35,501,779 | 36,566,832 |
| 141 | | | | | | |
| 142 | Total Transmission O&M | | 56,122,837 | 9,482,419 | 65,605,256 | 68,116,449 |
| 143 | | | | | | |

| | A | B | R | S | T | U |
|---|---|---|---|---|---|---|
| 1 | **PNM Exhibit RNG-4** | | | | | |
| 2 | **Schedule H-1** | | | | | |
| 3 | **Operations and Maintenance Expense** | | | | | |
| 4 | **Base Period Ending 6/30/2026** | | | | | |
| 5 | **Test Period Ending 9/30/2028** | | | | | |
| 6 | **Base Period data is historical information from the Company's Books and Records** | | | | | |
| 7 | O&M Model Lead Sheet | | | | | |
| 8 | | | **Column O + Column Q** | **OM-2, Column D for O&M; WP Fuel-1, Column N for Fuel** | **Column R + Column S** | **OM-10, Column CG for O&M; WP Fuel-2, Column O for Fuel** |
| 9 | **Descriptions** | **FERC** | **Total Company Unadjusted Base Period** | **Base Period Adjustments** | **Adjusted Base Period** | **Linkage Period One 7/2026 - 6/2027** |
| 144 | Distribution Operation | | | | | |
| 145 | Total Operation Supervision and Engineering | 580 | 1,936,997 | 264,991 | 2,201,988 | 2,233,617 |
| 146 | Total Station Expenses | 582 | 1,037,839 | 29,061 | 1,066,900 | 1,092,040 |
| 147 | Total Overhead Lines Expenses | 583 | 3,504,187 | 94,075 | 3,598,261 | 3,630,910 |
| 148 | Total Underground Lines Expenses | 584 | 1,043,973 | 33,688 | 1,077,661 | 1,087,084 |
| 149 | Total Street Lighting & Signal System Exp | 585 | - | - | - | - |
| 150 | Total Meter Expenses | 586 | 3,515,630 | 432,045 | 3,947,675 | 3,995,103 |
| 151 | Total Meter Expenses - Grid Mod | 586 - Grid Mod | - | - | - | - |
| 152 | Total Misc. Expenses | 588 | 8,310,680 | 1,280,974 | 9,591,654 | 9,745,709 |
| 153 | Total Rents | 589 | 829,871 | - | 829,871 | 841,312 |
| 154 | Total Distribution Operation | | 20,179,176 | 2,134,833 | 22,314,009 | 22,625,776 |
| 155 | | | | | | |
| 156 | Distribution Maintenance | | | | | |
| 157 | Total Maintenance Supervision and Engineering | 590 | 870,009 | (7,991) | 862,018 | 886,916 |
| 158 | Total Maintenance of Structures | 591 | 32,242 | - | 32,242 | 33,210 |
| 159 | Total Maintenance of Station Equipment | 592 | 2,258,729 | 83,502 | 2,342,230 | 2,379,053 |
| 160 | Total Maintenance of Overhead Lines | 593 | 9,938,081 | 41,166 | 9,979,247 | 10,258,788 |
| 161 | Total Maintenance of Underground Lines | 594 | 2,591,100 | 38,259 | 2,629,359 | 2,679,317 |
| 162 | Total Maintenance of Line Transformers | 595 | - | | - | - |
| 163 | Total Maintenance of Street Lighting & Signal Systems | 596 | 878,714 | (206,815) | 671,899 | 689,801 |
| 164 | Total Maintenance of Meters | 597 | 720,177 | 323,436 | 1,043,613 | 1,052,321 |
| 165 | Total Maintenance of Meters - Grid Mod | 597 - Grid Mod | - | - | - | - |
| 166 | Total Maintenance of Misc. Distribution Plant | 598 | - | - | - | - |
| 167 | Total Other Distribution O&M - Grid Mod | 580-598 Grid Mod | 246 | (246) | - | - |
| 168 | Total Distribution Maintenance | | 17,289,299 | 271,311 | 17,560,610 | 17,979,405 |

| | A | B | R | S | T | U |
|---|---|---|---|---|---|---|
| 1 | **PNM Exhibit RNG-4** | | | | | |
| 2 | **Schedule H-1** | | | | | |
| 3 | **Operations and Maintenance Expense** | | | | | |
| 4 | **Base Period Ending 6/30/2026** | | | | | |
| 5 | **Test Period Ending 9/30/2028** | | | | | |
| 6 | **Base Period data is historical information from the Company's Books and Records** | | | | | |
| 7 | O&M Model Lead Sheet | | | | | |
| 8 | | | **Column O + Column Q** | **OM-2, Column D for O&M; WP Fuel-1, Column N for Fuel** | **Column R + Column S** | **OM-10, Column CG for O&M; WP Fuel-2, Column O for Fuel** |
| 9 | **Descriptions** | **FERC** | **Total Company Unadjusted Base Period** | **Base Period Adjustments** | **Adjusted Base Period** | **Linkage Period One 7/2026 - 6/2027** |
| 169 | | | | | | |
| 170 | Total Distribution O&M | | 37,468,475 | 2,406,144 | 39,874,619 | 40,605,181 |
| 171 | | | | | | |
| 172 | Customer Accounting Expenses | | | | | |
| 173 | Total Supervision | 901 | (234,519) | (1,770) | (236,289) | (243,392) |
| 174 | Total Meter Reading Expenses | 902 | 8,835,322 | (246,436) | 8,588,886 | 8,732,054 |
| 175 | Total Customer Records and Collection Exp | 903 | 11,717,705 | 21,975 | 11,739,680 | 11,969,471 |
| 176 | Total Uncollectible Accounts | 904 | 5,248,286 | 798,815 | 6,047,100 | 6,228,513 |
| 177 | Total Misc. Customer Accounts Expenses | 905 | - | - | - | - |
| 178 | Total Customer Accounting Expenses - Grid Mod | 901-905 | - | - | - | - |
| 179 | Total Customer Accounting Expenses | | 25,566,793 | 572,584 | 26,139,377 | 26,686,645 |
| 180 | | | | | | |
| 181 | Customer Service & Informational Exp | | | | | |
| 182 | Total Customer Service & Informational Exp | 906 | 171,816 | (2,213) | 169,603 | 174,691 |
| 183 | Total Customer Assistance Expenses | 908 | 1,265,587 | (205,953) | 1,059,634 | 1,072,306 |
| 184 | Total Informational & Instructional Advert Exp | 909 | 107,995 | - | 107,995 | 111,235 |
| 185 | Total Miscellaneous Customer Service & Informational Expenses | 910 | 422 | 2,806 | 3,228 | 3,260 |
| 186 | Total Customer Service & Inform Exp | | 1,545,820 | (205,360) | 1,340,461 | 1,361,493 |
| 187 | | | | | | |

| | A | B | R | S | T | U |
|---|---|---|---|---|---|---|
| 1 | **PNM Exhibit RNG-4** | | | | | |
| 2 | **Schedule H-1** | | | | | |
| 3 | **Operations and Maintenance Expense** | | | | | |
| 4 | **Base Period Ending 6/30/2026** | | | | | |
| 5 | **Test Period Ending 9/30/2028** | | | | | |
| 6 | **Base Period data is historical information from the Company's Books and Records** | | | | | |
| 7 | O&M Model Lead Sheet | | | | | |
| 8 | | | **Column O + Column Q** | **OM-2, Column D for O&M; WP Fuel-1, Column N for Fuel** | **Column R + Column S** | **OM-10, Column CG for O&M; WP Fuel-2, Column O for Fuel** |
| 9 | **Descriptions** | **FERC** | **Total Company Unadjusted Base Period** | **Base Period Adjustments** | **Adjusted Base Period** | **Linkage Period One 7/2026 - 6/2027** |
| 188 | Sales Expenses | | | | | |
| 189 | Total Demonstrating and Selling Expenses - Non Production | 912 | - | - | - | - |
| 190 | Total Demonstrating and Selling Expenses - Production | 912 | 5,042,201 | 300,985 | 5,343,186 | 5,412,268 |
| 191 | Total Advertising Expense | 913 | - | - | - | - |
| 192 | Total Sales Expenses | | 5,042,201 | 300,985 | 5,343,186 | 5,412,268 |
| 193 | | | | | | |
| 194 | Administrative & General Expenses | | | | | |
| 195 | Administrative & General Exp - Operation | | | | | |
| 196 | | | | | | |
| 197 | Total Administrative & General Salaries | 920 | 3,462,162 | (134,824) | 3,327,337 | 3,360,499 |
| 198 | Total Office Supplies and Expenses | 921 | 1,759,614 | (117,044) | 1,642,571 | 1,691,848 |
| 199 | Total Admin Expenses Transferred--Credit | 922 | (21,634,599) | (14,231) | (21,648,830) | (27,537,828) |
| 200 | Total Production Related - Shared Services | 922.9 | 24,006,416 | (10,547,781) | 13,458,635 | 12,977,388 |
| 201 | Total Transmission Related - Shared Services | 922.9 | 20,153,481 | (8,110,961) | 12,042,520 | 11,993,614 |
| 202 | Total Distribution Related - Shared Services | 922.9 | 87,572,831 | (36,924,065) | 50,648,765 | 50,359,223 |
| 203 | Total Outside Services Employed | 923 | 5,112,093 | (4,347,826) | 764,267 | 787,195 |
| 204 | Total Property Insurance | 924 | 1,757,492 | (27,237) | 1,730,255 | 1,782,163 |
| 205 | Total Injuries and Damages | 925 | 9,154,038 | (44,743) | 9,109,295 | 7,507,238 |
| 206 | Total Employee Pensions and Benefits | 926 | 74,059,266 | (61,465,836) | 12,593,430 | 18,515,141 |
| 207 | Total Regulatory Commission Expenses | 928 | 47,021,191 | (44,136,656) | 2,884,535 | 2,971,071 |
| 208 | Total Regulatory Commission Expenses - Rate Case Expense | 928 | - | - | - | - |
| 209 | Total General Advertising/Misc. General Exp | 930 | 12,723,546 | (83,067) | 12,640,479 | 13,019,693 |
| 210 | Total Rents - Distribution | 931 | 258,677 | - | 258,677 | 266,438 |
| 211 | Total Gas A&M Maintenance-Transmission | 932 | - | - | - | - |
| 212 | Total Administrative & General Expenses | | 265,406,209 | (165,954,271) | 99,451,938 | 97,693,683 |
| 213 | | | | | | |

| | A | B | R | S | T | U |
|---|---|---|---|---|---|---|
| 1 | **PNM Exhibit RNG-4** | | | | | |
| 2 | **Schedule H-1** | | | | | |
| 3 | **Operations and Maintenance Expense** | | | | | |
| 4 | **Base Period Ending 6/30/2026** | | | | | |
| 5 | **Test Period Ending 9/30/2028** | | | | | |
| 6 | **Base Period data is historical information from the Company's Books and Records** | | | | | |
| 7 | O&M Model Lead Sheet | | | | | |
| 8 | | | **Column O + Column Q** | **OM-2, Column D for O&M; WP Fuel-1, Column N for Fuel** | **Column R + Column S** | **OM-10, Column CG for O&M; WP Fuel-2, Column O for Fuel** |
| 9 | **Descriptions** | **FERC** | **Total Company Unadjusted Base Period** | **Base Period Adjustments** | **Adjusted Base Period** | **Linkage Period One 7/2026 - 6/2027** |
| 214 | Admin & General Exp - Maintenance | | | | | |
| 215 | Total Maintenance of General Plant | 935 | 2,743,117 | 68,244 | 2,811,361 | 2,875,613 |
| 216 | Total Admin & General - Maintenance | | 2,743,117 | 68,244 | 2,811,361 | 2,875,613 |
| 217 | | | | | | |
| 218 | Renewables - A&G (920-935) | 920-935 | 371,202 | - | 371,202 | 382,338 |
| 219 | Grid Mod - A&G (920-935) | 920-935 | 457,222 | (457,222) | - | - |
| 220 | Energy Storage Transmission - A&G (920-935) | 920-935 | - | - | - | - |
| 221 | Energy Storage Distribution - A&G (920-935) | 920-935 | 24,341 | - | 24,341 | 25,071 |
| 222 | Total Admin & General - Renewables and Grid Mod | | 852,765 | (457,222) | 395,543 | 407,409 |
| 223 | | | | | | |
| 224 | Total Admin and General Expenses | | 269,002,091 | (166,343,249) | 102,658,842 | 100,976,705 |
| 225 | | | | | | |
| 226 | Total Operation and Maintenance Exp | | 952,085,636 | (310,091,698) | 641,993,938 | 623,374,949 |
| 227 | | | | | | |
| 228 | This schedule is sponsored by PNM Witness Gutierrez | | | | | |
| 229 | Please see H1 Base and Test Notes Page for corresponding notes. | | | | | |

| | A | B | V | W | X |
|---|---|---|---|---|---|
| 1 | **PNM Exhibit RNG-4** | | | | |
| 2 | **Schedule H-1** | | | | |
| 3 | **Operations and Maintenance Expense** | | | | |
| 4 | **Base Period Ending 6/30/2026** | | | | |
| 5 | **Test Period Ending 9/30/2028** | | | | |
| 6 | **Base Period data is historical information from the Company's Books and Records** | | | | |
| 7 | O&M Model Lead Sheet | | | | |
| 8 | | | **OM-10, Column CH for O&M; WP Fuel-2, Column AF for Fuel** | **OM-2, Column M for O&M; WP Fuel-3, Column O** | |
| 9 | **Descriptions** | **FERC** | **Linkage Period Two 10/2026 - 9/2027** | **Total Company Test Period** | **Adjusted Base and Test Periods Variance** |
| 10 | Non-Fuel Production O&M | | | | |
| 11 | Steam Production Operation | | | | |
| 12 | Total Operation Supervision and Engineering | 500 | 2,136,016 | 2,202,859 | 126,428 |
| 13 | Total Steam Expenses | 502 | 7,619,933 | 7,848,531 | 450,538 |
| 14 | Total Steam from Other Sources | 503 | - | - | - |
| 15 | Total Electric Expenses | 505 | 1,319,933 | 1,382,684 | 91,103 |
| 16 | Total Misc. Steam Power Expenses | 506 | 1,617,599 | 1,668,308 | 95,748 |
| 17 | Total Rents | 507 | 229,597 | 236,485 | 13,575 |
| 18 | Total Steam Production Expense | | 12,923,078 | 13,338,867 | 777,392 |
| 19 | | | | | |
| 20 | Steam Production Maintenance | | | | |
| 21 | Total Maintenance Supervision and Engineering | 510 | 809,332 | 835,714 | 47,954 |
| 22 | Total Maintenance of Structures | 511 | 3,286,615 | 3,392,472 | 198,360 |
| 23 | Total Maintenance of Boiler Plant | 512 | 7,170,197 | 7,410,455 | 438,133 |
| 24 | Total Maintenance of Electric Plant | 513 | 2,581,464 | 2,659,329 | 152,870 |
| 25 | Total Maintenance of Misc. Electric Plant | 514 | 1,065,608 | 1,097,576 | 63,005 |
| 26 | Total Steam Production Maintenance Subtotal | | 14,913,216 | 15,395,547 | 900,322 |
| 27 | | | | | |
| 28 | Total Steam Production O&M | | 27,836,294 | 28,734,415 | 1,677,714 |
| 29 | | | | | |

| | A | B | V | W | X |
|---|---|---|---|---|---|
| 1 | **PNM Exhibit RNG-4** | | | | |
| 2 | **Schedule H-1** | | | | |
| 3 | **Operations and Maintenance Expense** | | | | |
| 4 | **Base Period Ending 6/30/2026** | | | | |
| 5 | **Test Period Ending 9/30/2028** | | | | |
| 6 | **Base Period data is historical information from the Company's Books and Records** | | | | |
| 7 | O&M Model Lead Sheet | | | | |
| 8 | | | **OM-10, Column CH for O&M; WP Fuel-2, Column AF for Fuel** | **OM-2, Column M for O&M; WP Fuel-3, Column O** | |
| 9 | **Descriptions** | **FERC** | **Linkage Period Two 10/2026 - 9/2027** | **Total Company Test Period** | **Adjusted Base and Test Periods Variance** |
| 30 | Nuclear Production Operation | | | | |
| 31 | Total Operation Supervision and Engineering | 517 | 7,023,735 | 7,234,618 | 415,295 |
| 32 | Total Coolants and Water | 519 | 5,780,831 | 5,954,256 | 341,799 |
| 33 | Total Steam Expenses | 520 | 2,727,673 | 2,809,503 | 161,277 |
| 34 | Total Electric Expenses | 523 | 3,965,938 | 4,084,916 | 234,491 |
| 35 | Total Misc. Nuclear Power Expenses, excluding PV 1&2 Decommissioning and CE Credit | 524 | 11,489,686 | 11,834,377 | 679,342 |
| 36 | Total Misc. Nuclear Power Expenses - PV 1&2 Decommissioning and CE Credit | 524 | - | - | - |
| 37 | Total Rents - Nuclear, excluding PV 1&2 Prudency Audit and Excess Gain Amortization | 525 | 54,718 | 56,360 | 3,235 |
| 38 | Total Rents-Nuclear - PV 1&2 Prudency Audit | 525 | - | - | - |
| 39 | Total Rents-Nuclear - PV 1&2 Excess Gain Amortization | 525 | - | - | 39,828 |
| 40 | Total Nuclear Production Operation | | 31,042,581 | 31,974,030 | 1,875,267 |
| 41 | | | | | |
| 42 | Nuclear Production Maintenance | | | | |
| 43 | Total Maintenance Supervision and Engineering | 528 | 1,722,032 | 1,773,693 | 101,817 |
| 44 | Total Maintenance of Structures | 529 | 761,052 | 783,884 | 44,998 |
| 45 | Total Maintenance of Reactor Plant | 530 | 4,157,103 | 4,281,816 | 245,794 |
| 46 | Total Maintenance of Electric Plant | 531 | 5,046,287 | 5,197,675 | 298,368 |
| 47 | Total Maintenance of Misc. Nuclear Plant | 532 | 1,106,896 | 1,140,103 | 65,447 |
| 48 | Palo Verde 3 - Nuclear Production | 517,519-556 | - | - | - |
| 49 | Total Nuclear Production Maintenance | | 12,793,371 | 13,177,172 | 756,424 |
| 50 | | | | | |
| 51 | Total Nuclear Production O&M | | 43,835,952 | 45,151,201 | 2,631,690 |

| | A | B | V | W | X |
|---|---|---|---|---|---|
| 1 | **PNM Exhibit RNG-4** | | | | |
| 2 | **Schedule H-1** | | | | |
| 3 | **Operations and Maintenance Expense** | | | | |
| 4 | **Base Period Ending 6/30/2026** | | | | |
| 5 | **Test Period Ending 9/30/2028** | | | | |
| 6 | **Base Period data is historical information from the Company's Books and Records** | | | | |
| 7 | O&M Model Lead Sheet | | | | |
| 8 | | | **OM-10, Column CH for O&M; WP Fuel-2, Column AF for Fuel** | **OM-2, Column M for O&M; WP Fuel-3, Column O** | |
| 9 | **Descriptions** | **FERC** | **Linkage Period Two 10/2026 - 9/2027** | **Total Company Test Period** | **Adjusted Base and Test Periods Variance** |
| 52 | | | | | |
| 53 | Other Production Operation | | | | |
| 54 | Total Operation Supervision and Engineering | 546 | 4,606,458 | 4,751,526 | 272,693 |
| 55 | Total Misc. Other Power Expenses | 549 | - | - | - |
| 56 | Total Misc. Other Power Expenses-Renew | 549-Renew | 324 | 334 | 19 |
| 57 | Total Other Production Operation | | 4,606,783 | 4,751,860 | 272,713 |
| 58 | | | | | |
| 59 | Other Production Maintenance | | | | |
| 60 | Total Maintenance of Structures | 552 | 1,443,894 | 1,492,033 | 87,555 |
| 61 | Total Maintenance of Gen and Electric Plant | 553 | 11,211,181 | 11,604,371 | 694,844 |
| 62 | Total Maintenance of Gen and Electric Plant-Renew | 553-Renew | - | - | - |
| 63 | Total System Control and Load Dispatching | 556 | 7,176,372 | 7,437,527 | 426,521 |
| 64 | Total Other Production Maintenance | | 19,831,448 | 20,533,931 | 1,208,920 |
| 65 | | | | | |
| 66 | Total Other Production O&M | | 24,438,230 | 25,285,791 | 1,481,632 |
| 67 | | | | | |
| 68 | Solar Production Operations and Maintenance | | | | |
| 69 | Total Generation & Plant OpEx-Solar | 558.2 | 581,534 | 599,415 | 34,405 |
| 70 | Total Generation & Plant OpEx-Solar - Renewables | 558.2 Renew | 1,313,690 | 1,356,031 | (65,436) |
| 71 | Total Maintenance -Solar Panels, Structures, & Equipment | 558.7 | 230,473 | 237,387 | 13,627 |
| 72 | Total Maintenance -Solar Panels, Structures, & Equipment - Energy Storage Transmission | 558.7 Energy Storage Tran | - | 796,475 | 796,475 |
| 73 | Total Maintenance -Solar Panels, Structures, & Equipment - Battery Storage | 558.7 Energy Storage Dist | 2,389 | 2,461 | 141 |
| 74 | Total Maintenance -Solar Panels, Structures, & Equipment - Battery | 558.7 Renew | 1,439,238 | 1,482,415 | 85,097 |
| 75 | Total Solar Production O&M | | 3,567,324 | 4,474,184 | 864,308 |
| 76 | | | | | |
| 77 | Total Non-Fuel Production O&M | | 99,677,800 | 103,645,590 | 6,655,345 |
| 78 | | | | | |
| 79 | Energy Storage Operations and Maintenance | | | | |
| 80 | Total Maintenance-Storage Eqp, Struc Total- Energy Storage | 578.2 | - | - | - |
| 81 | Maintenance-Storage Eqp, Struc Total - Energy Storage Transmission | 578.2-Energy Storage Tran | - | 1,338,434 | 1,338,434 |
| 82 | Maintenance-Storage Eqp, Struc Total - Energy Storage Distribution | 578.2-Energy Storage Dist. | 82,457 | 464,779 | 384,609 |
| 83 | Total Energy Storage Operations and Maintenance | | 82,457 | 1,803,213 | 1,723,042 |
| 84 | | | | | |

| | A | B | V | W | X |
|---|---|---|---|---|---|
| 1 | **PNM Exhibit RNG-4** | | | | |
| 2 | **Schedule H-1** | | | | |
| 3 | **Operations and Maintenance Expense** | | | | |
| 4 | **Base Period Ending 6/30/2026** | | | | |
| 5 | **Test Period Ending 9/30/2028** | | | | |
| 6 | **Base Period data is historical information from the Company's Books and Records** | | | | |
| 7 | O&M Model Lead Sheet | | | | |
| 8 | | | **OM-10, Column CH for O&M; WP Fuel-2, Column AF for Fuel** | **OM-2, Column M for O&M; WP Fuel-3, Column O** | |
| 9 | **Descriptions** | **FERC** | **Linkage Period Two 10/2026 - 9/2027** | **Total Company Test Period** | **Adjusted Base and Test Periods Variance** |
| 85 | Fuel Production O&M | | | | |
| 86 | Coal Fuel Burn | 501 | 68,629,187 | 73,047,621 | 27,524,028 |
| 87 | Steam Fuel Handling and Disposal | 501 | 1,978,215 | 1,978,215 | (965,595) |
| 88 | Tot Nuclear Fuel Exp | 518 | 17,095,039 | 19,306,622 | 3,963,672 |
| 89 | Total Nuclear Disposal | 518 | 866,288 | 866,288 | (777,436) |
| 90 | Total Gas Generation | 547 | 47,195,851 | 67,002,028 | 51,451,114 |
| 91 | Wind PPAs | 555 | 29,386,314 | 29,680,207 | 1,379,548 |
| 92 | Geothermal PPA | 555 | 3,773,088 | 3,875,345 | (3,918,859) |
| 93 | Total Purchased Power Energy | 555 | 102,553,299 | 155,292,787 | (460,929) |
| 94 | Spinning Reserves | 555 | 112,483 | 112,483 | 112,483 |
| 95 | ESA Fuel Reclass | 555 | | | - |
| 96 | Total Fuel Production O&M | | 271,589,765 | 351,161,597 | 78,308,025 |
| 97 | | | | | |
| 98 | Off-system Sales | 447.3 | (94,471,734) | (157,867,723) | (84,333,707) |
| 99 | Off-system Sales - Other | | - | - | - |
| 100 | Physical Sales of Gas (under FAC hedge plan) | 447.7 | - | - | - |
| 101 | EDAM | 456.1 | (12,058,463) | (25,600,000) | (11,283,019) |
| 102 | Short Term PTP and Transmission Service | 456.1 | - | - | - |
| 103 | Total Other Fuel | | (106,530,197) | (183,467,723) | (95,616,726) |

| | A | B | V | W | X |
|---|---|---|---|---|---|
| 1 | **PNM Exhibit RNG-4** | | | | |
| 2 | **Schedule H-1** | | | | |
| 3 | **Operations and Maintenance Expense** | | | | |
| 4 | **Base Period Ending 6/30/2026** | | | | |
| 5 | **Test Period Ending 9/30/2028** | | | | |
| 6 | **Base Period data is historical information from the Company's Books and Records** | | | | |
| 7 | O&M Model Lead Sheet | | | | |
| 8 | | | **OM-10, Column CH for O&M; WP Fuel-2, Column AF for Fuel** | **OM-2, Column M for O&M; WP Fuel-3, Column O** | |
| 9 | **Descriptions** | **FERC** | **Linkage Period Two 10/2026 - 9/2027** | **Total Company Test Period** | **Adjusted Base and Test Periods Variance** |
| 104 | | | | | |
| 105 | Other Production - Fuel Related | | | | |
| 106 | Gas Plants Fuel Transportation | 547 | 13,548,410 | 13,548,410 | 552,795 |
| 107 | Gas PPA - Valencia - Demand | 555 | 20,015,659 | 20,015,659 | (267,143) |
| 108 | Energy Storage Agreement - Demand | 555 | 79,722,284 | 137,144,634 | 55,002,406 |
| 109 | Purchase power for Economy Service Customer | 555 | - | - | - |
| 110 | Purchased power for Rate 36B | 555 | - | - | - |
| 111 | FPPCAC deferral | 501.1,555.4 | - | - | - |
| 112 | Rec Purchases and Renewable Energy Amortization | 555 | 2,551,031 | 2,547,163 | (759,523) |
| 113 | City of Gallup - Mandoza Station Charges | 555 | - | - | - |
| 114 | Coal Mine Decommissioning | 501.15 | - | - | - |
| 115 | Broker Fees | 557 | 158,441 | 158,441 | (73,434) |
| 116 | Total Other Production - Fuel Related | | 115,995,824 | 173,414,307 | 54,455,101 |
| 117 | | | | | |
| 118 | Transmission Operation | | | | |
| 119 | Total Operation Supervision and Engineering | 560 | (61,838) | 536,219 | 576,234 |
| 120 | Total Load Dispatching | 561 | 847,089 | 881,351 | 50,511 |
| 121 | Total Station Expenses | 562 | 1,588,601 | 1,647,904 | 97,182 |
| 122 | Total Overhead Lines Expenses | 563 | 126,311 | 132,463 | 8,801 |
| 123 | Total Misc. Transmission Expenses | 566 | 3,402,633 | 3,511,448 | 204,753 |
| 124 | Total Rents | 567 | 17,713,971 | 18,302,520 | 2,104,287 |
| 125 | Total Transmission Operation | | 23,616,766 | 25,011,905 | 3,041,769 |
| 126 | | | | | |

| | A | B | V | W | X |
|---|---|---|---|---|---|
| 1 | **PNM Exhibit RNG-4** | | | | |
| 2 | **Schedule H-1** | | | | |
| 3 | **Operations and Maintenance Expense** | | | | |
| 4 | **Base Period Ending 6/30/2026** | | | | |
| 5 | **Test Period Ending 9/30/2028** | | | | |
| 6 | **Base Period data is historical information from the Company's Books and Records** | | | | |
| 7 | O&M Model Lead Sheet | | | | |
| 8 | | | **OM-10, Column CH for O&M; WP Fuel-2, Column AF for Fuel** | **OM-2, Column M for O&M; WP Fuel-3, Column O** | |
| 9 | **Descriptions** | **FERC** | **Linkage Period Two 10/2026 - 9/2027** | **Total Company Test Period** | **Adjusted Base and Test Periods Variance** |
| 127 | Transmission Maintenance | | | | |
| 128 | Total Maintenance Supervision and Engineering | 568 | 22,067 | 22,877 | 1,312 |
| 129 | Total Maintenance of Structures | 569 | 1,808,859 | 1,863,125 | 106,951 |
| 130 | Total Maintenance of Station Equipment | 570 | 4,238,887 | 4,786,900 | 638,371 |
| 131 | Total Maintenance of Overhead Lines | 571 | 931,632 | 3,305,967 | 2,400,742 |
| 132 | Total Maintenance of Underground Lines | 572 | - | - | - |
| 133 | Total Maintenance of Misc. Transm Plant | 573 | - | - | - |
| 134 | Total Maintenance Transmission Plant | 574 | 5,406 | 5,673 | 379 |
| 135 | Incremental FERC Rate - Transmission O&M | 560-564,566-574 | 1,311,510 | 1,329,383 | 32,829 |
| 136 | Total Transmission Maintenance | | 8,318,362 | 11,313,925 | 3,180,585 |
| 137 | | | | | |
| 138 | Transmission O&M by Others (565) | | | | |
| 139 | Total Transmission by Others | 565 | 36,566,832 | 37,663,837 | 2,162,058 |
| 140 | Total Transmission O&M by Others (565) | | 36,566,832 | 37,663,837 | 2,162,058 |
| 141 | | | | | |
| 142 | Total Transmission O&M | | 68,501,960 | 73,989,667 | 8,384,412 |
| 143 | | | | | |

| | A | B | V | W | X |
|---|---|---|---|---|---|
| 1 | **PNM Exhibit RNG-4** | | | | |
| 2 | **Schedule H-1** | | | | |
| 3 | **Operations and Maintenance Expense** | | | | |
| 4 | **Base Period Ending 6/30/2026** | | | | |
| 5 | **Test Period Ending 9/30/2028** | | | | |
| 6 | **Base Period data is historical information from the Company's Books and Records** | | | | |
| 7 | O&M Model Lead Sheet | | | | |
| 8 | | | **OM-10, Column CH for O&M; WP Fuel-2, Column AF for Fuel** | **OM-2, Column M for O&M; WP Fuel-3, Column O** | |
| 9 | **Descriptions** | **FERC** | **Linkage Period Two 10/2026 - 9/2027** | **Total Company Test Period** | **Adjusted Base and Test Periods Variance** |
| 144 | Distribution Operation | | | | |
| 145 | Total Operation Supervision and Engineering | 580 | 2,250,832 | 2,335,917 | 133,929 |
| 146 | Total Station Expenses | 582 | 1,095,546 | 1,132,323 | 65,423 |
| 147 | Total Overhead Lines Expenses | 583 | 3,674,301 | 3,855,196 | 256,935 |
| 148 | Total Underground Lines Expenses | 584 | 1,100,299 | 1,154,894 | 77,233 |
| 149 | Total Street Lighting & Signal System Exp | 585 | - | - | - |
| 150 | Total Meter Expenses | 586 | 4,035,808 | 4,222,340 | 274,665 |
| 151 | Total Meter Expenses - Grid Mod | 586 - Grid Mod | - | 5,279,638 | 5,279,638 |
| 152 | Total Misc. Expenses | 588 | 9,818,215 | 26,472,661 | 16,881,008 |
| 153 | Total Rents | 589 | 841,312 | 852,792 | 22,921 |
| 154 | Total Distribution Operation | | 22,816,314 | 45,305,760 | 22,991,750 |
| 155 | | | | | |
| 156 | Distribution Maintenance | | | | |
| 157 | Total Maintenance Supervision and Engineering | 590 | 887,397 | 914,511 | 52,492 |
| 158 | Total Maintenance of Structures | 591 | 33,210 | 34,206 | 1,964 |
| 159 | Total Maintenance of Station Equipment | 592 | 2,397,923 | 2,499,468 | 157,238 |
| 160 | Total Maintenance of Overhead Lines | 593 | 10,269,515 | 10,592,261 | 613,014 |
| 161 | Total Maintenance of Underground Lines | 594 | 2,695,991 | 2,804,052 | 174,693 |
| 162 | Total Maintenance of Line Transformers | 595 | - | - | - |
| 163 | Total Maintenance of Street Lighting & Signal Systems | 596 | 691,101 | 713,956 | 42,056 |
| 164 | Total Maintenance of Meters | 597 | 1,065,360 | 1,118,617 | 75,004 |
| 165 | Total Maintenance of Meters - Grid Mod | 597 - Grid Mod | - | 5,388,458 | 5,388,458 |
| 166 | Total Maintenance of Misc. Distribution Plant | 598 | - | - | - |
| 167 | Total Other Distribution O&M - Grid Mod | 580-598 Grid Mod | - | 2,584,891 | 2,584,891 |
| 168 | Total Distribution Maintenance | | 18,040,496 | 26,650,420 | 9,089,810 |

| | A | B | V | W | X |
|---|---|---|---|---|---|
| 1 | **PNM Exhibit RNG-4** | | | | |
| 2 | **Schedule H-1** | | | | |
| 3 | **Operations and Maintenance Expense** | | | | |
| 4 | **Base Period Ending 6/30/2026** | | | | |
| 5 | **Test Period Ending 9/30/2028** | | | | |
| 6 | **Base Period data is historical information from the Company's Books and Records** | | | | |
| 7 | O&M Model Lead Sheet | | | | |
| 8 | | | **OM-10, Column CH for O&M; WP Fuel-2, Column AF for Fuel** | **OM-2, Column M for O&M; WP Fuel-3, Column O** | |
| 9 | **Descriptions** | **FERC** | **Linkage Period Two 10/2026 - 9/2027** | **Total Company Test Period** | **Adjusted Base and Test Periods Variance** |
| 169 | | | | | |
| 170 | Total Distribution O&M | | 40,856,810 | 71,956,180 | 32,081,561 |
| 171 | | | | | |
| 172 | Customer Accounting Expenses | | | | |
| 173 | Total Supervision | 901 | (243,385) | 2,149,321 | 2,385,610 |
| 174 | Total Meter Reading Expenses | 902 | 8,789,303 | 9,111,376 | 522,491 |
| 175 | Total Customer Records and Collection Exp | 903 | 12,030,671 | 13,454,024 | 1,714,344 |
| 176 | Total Uncollectible Accounts | 904 | 6,228,513 | 6,415,369 | 368,268 |
| 177 | Total Misc. Customer Accounts Expenses | 905 | - | - | - |
| 178 | Total Customer Accounting Expenses - Grid Mod | 901-905 | - | - | - |
| 179 | Total Customer Accounting Expenses | | 26,805,102 | 31,130,091 | 4,990,713 |
| 180 | | | | | |
| 181 | Customer Service & Informational Exp | | | | |
| 182 | Total Customer Service & Informational Exp | 906 | 174,691 | 179,932 | 10,329 |
| 183 | Total Customer Assistance Expenses | 908 | 1,081,865 | 1,124,070 | 64,436 |
| 184 | Total Informational & Instructional Advert Exp | 909 | 111,235 | 114,572 | 6,577 |
| 185 | Total Miscellaneous Customer Service & Informational Expenses | 910 | 3,293 | 3,424 | 196 |
| 186 | Total Customer Service & Inform Exp | | 1,371,083 | 1,421,999 | 81,538 |
| 187 | | | | | |

| | A | B | V | W | X |
|---|---|---|---|---|---|
| 1 | **PNM Exhibit RNG-4** | | | | |
| 2 | **Schedule H-1** | | | | |
| 3 | **Operations and Maintenance Expense** | | | | |
| 4 | **Base Period Ending 6/30/2026** | | | | |
| 5 | **Test Period Ending 9/30/2028** | | | | |
| 6 | **Base Period data is historical information from the Company's Books and Records** | | | | |
| 7 | O&M Model Lead Sheet | | | | |
| 8 | | | **OM-10, Column CH for O&M; WP Fuel-2, Column AF for Fuel** | **OM-2, Column M for O&M; WP Fuel-3, Column O** | |
| 9 | **Descriptions** | **FERC** | **Linkage Period Two 10/2026 - 9/2027** | **Total Company Test Period** | **Adjusted Base and Test Periods Variance** |
| 188 | Sales Expenses | | | | |
| 189 | Total Demonstrating and Selling Expenses - Non Production | 912 | - | - | - |
| 190 | Total Demonstrating and Selling Expenses - Production | 912 | 5,457,875 | 5,668,130 | 324,944 |
| 191 | Total Advertising Expense | 913 | - | - | - |
| 192 | Total Sales Expenses | | 5,457,875 | 5,668,130 | 324,944 |
| 193 | | | | | |
| 194 | Administrative & General Expenses | | | | |
| 195 | Administrative & General Exp - Operation | | | | |
| 196 | | | | | |
| 197 | Total Administrative & General Salaries | 920 | 3,393,828 | 3,529,639 | 202,302 |
| 198 | Total Office Supplies and Expenses | 921 | 1,691,848 | 1,742,603 | 100,033 |
| 199 | Total Admin Expenses Transferred--Credit | 922 | (26,840,401) | (24,495,954) | (2,847,124) |
| 200 | Total Production Related - Shared Services | 922.9 | 13,057,213 | 14,896,159 | 1,437,524 |
| 201 | Total Transmission Related - Shared Services | 922.9 | 12,046,151 | 12,913,259 | 870,739 |
| 202 | Total Distribution Related - Shared Services | 922.9 | 50,578,012 | 55,910,457 | 5,261,691 |
| 203 | Total Outside Services Employed | 923 | 787,195 | 810,811 | 46,544 |
| 204 | Total Property Insurance | 924 | 1,782,163 | 1,835,628 | 105,373 |
| 205 | Total Injuries and Damages | 925 | 7,755,288 | 8,836,639 | (272,656) |
| 206 | Total Employee Pensions and Benefits | 926 | 19,112,073 | 20,701,977 | 8,108,547 |
| 207 | Total Regulatory Commission Expenses | 928 | 2,971,071 | 3,060,203 | 175,668 |
| 208 | Total Regulatory Commission Expenses - Rate Case Expense | 928 | - | - | - |
| 209 | Total General Advertising/Misc. General Exp | 930 | 13,019,693 | 13,410,284 | 769,805 |
| 210 | Total Rents - Distribution | 931 | 266,438 | 274,431 | 15,753 |
| 211 | Total Gas A&M Maintenance-Transmission | 932 | - | - | - |
| 212 | Total Administrative & General Expenses | | 99,620,572 | 113,426,137 | 13,974,199 |
| 213 | | | | | |

| | A | B | V | W | X |
|---|---|---|---|---|---|
| 1 | **PNM Exhibit RNG-4** | | | | |
| 2 | **Schedule H-1** | | | | |
| 3 | **Operations and Maintenance Expense** | | | | |
| 4 | **Base Period Ending 6/30/2026** | | | | |
| 5 | **Test Period Ending 9/30/2028** | | | | |
| 6 | **Base Period data is historical information from the Company's Books and Records** | | | | |
| 7 | O&M Model Lead Sheet | | | | |
| 8 | | | **OM-10, Column CH for O&M; WP Fuel-2, Column AF for Fuel** | **OM-2, Column M for O&M; WP Fuel-3, Column O** | |
| 9 | **Descriptions** | **FERC** | **Linkage Period Two 10/2026 - 9/2027** | **Total Company Test Period** | **Adjusted Base and Test Periods Variance** |
| 214 | Admin & General Exp - Maintenance | | | | |
| 215 | Total Maintenance of General Plant | 935 | 2,886,916 | 2,990,840 | 179,479 |
| 216 | Total Admin & General - Maintenance | | 2,886,916 | 2,990,840 | 179,479 |
| 217 | | | | | |
| 218 | Renewables - A&G (920-935) | 920-935 | 382,338 | 393,808 | 22,606 |
| 219 | Grid Mod - A&G (920-935) | 920-935 | - | 1,408,841 | 1,408,841 |
| 220 | Energy Storage Transmission - A&G (920-935) | 920-935 | - | - | - |
| 221 | Energy Storage Distribution - A&G (920-935) | 920-935 | 25,071 | 25,823 | 1,482 |
| 222 | Total Admin & General - Renewables and Grid Mod | | 407,409 | 1,828,472 | 1,432,930 |
| 223 | | | | | |
| 224 | Total Admin and General Expenses | | 102,914,896 | 118,245,449 | 15,586,607 |
| 225 | | | | | |
| 226 | Total Operation and Maintenance Exp | | 626,723,377 | 748,968,500 | 106,974,562 |
| 227 | | | | | |
| 228 | This schedule is sponsored by PNM Witness Gutierrez | | | | |
| 229 | Please see H1 Base and Test Notes Page for corresponding notes. | | | | |

| | A | B | C | D | E | F | G | H | I |
|---|---|---|---|---|---|---|---|---|---|
| 1 | **PNM Exhibit RNG-4** | | | | | | | | |
| 2 | **Schedule H-1** | | | | | | | | |
| 3 | **Operations and Maintenance Expense - Litigation Expense** | | | | | | | | |
| 4 | **Base Period Ending 6/30/2026** | | | | | | | | |
| 5 | **Test Period Ending 9/30/2028** | | | | | | | | |
| 6 | **Base Period data is historical information from the Company's Books and Records** | | | | | | | | |
| 7 | O&M Model Lead Sheet | | | | | | | | |
| 8 | | | | | | | | | |
| 9 | **Descriptions** | **FERC** | **Jul-25** | **Aug-25** | **Sep-25** | **Oct-25** | **Nov-25** | **Dec-25** | **Jan-26** |
| 10 | | | | | | | | | |
| 11 | Steam Production Operation | | | | | | | | |
| 14 | Total Litigation | | - | - | - | - | - | 323 | (323) |
| 44 | Total Non-Litigation | | 150,174 | 15,827 | 476,103 | 82,513 | 165,258 | 245,807 | 105,777 |
| 45 | Total | 500 | 150,174 | 15,827 | 476,103 | 82,513 | 165,258 | 246,130 | 105,454 |
| 46 | | | | | | | | | |
| 47 | Other Production Operation | | | | | | | | |
| 51 | Total Litigation | | 96 | 3,954 | 9,721 | (630) | 3,257 | 8,653 | (1,668) |
| 69 | Total Non-Litigation | | 306,632 | 318,697 | 245,305 | 284,682 | 735,425 | 645,566 | 274,167 |
| 70 | Total | 546 | 306,728 | 322,651 | 255,026 | 284,052 | 738,682 | 654,219 | 272,499 |
| 71 | | | | | | | | | |
| 72 | Admin Expenses Transferred--Credit (Production) | | | | | | | | |
| 75 | Total Litigation | | 1,860 | 2,645 | 4,249 | 210 | 723 | 1,346 | 1,054 |
| 78 | Total Non-Litigation | | 2,036,508 | 1,940,019 | 2,027,527 | 2,185,490 | 1,642,516 | 2,768,875 | 1,935,993 |
| 79 | Total | 922.9 | 2,038,368 | 1,942,664 | 2,031,776 | 2,185,700 | 1,643,239 | 2,770,221 | 1,937,047 |
| 80 | Admin Expenses Transferred--Credit (Transmission) | | | | | | | | |
| 83 | Total Litigation | | 4,589 | 6,282 | 8,243 | 8,690 | 5,423 | 12,564 | 7,191 |
| 86 | Total Non-Litigation | | 1,571,312 | 1,486,860 | 1,615,599 | 1,589,295 | 1,528,714 | 2,199,289 | 1,628,058 |
| 87 | Total | 922.9 | 1,575,901 | 1,493,142 | 1,623,843 | 1,597,984 | 1,534,137 | 2,211,853 | 1,635,248 |
| 88 | Admin Expenses Transferred--Credit (Distribution) | | | | | | | | |
| 91 | Total Litigation | | 7,529 | 11,262 | 15,018 | 8,393 | 11,350 | 14,667 | 8,745 |
| 94 | Total Non-Litigation | | 6,741,535 | 6,566,857 | 6,817,270 | 7,166,911 | 6,494,518 | 9,500,534 | 7,399,164 |
| 95 | Total | 922.9 | 6,749,064 | 6,578,119 | 6,832,288 | 7,175,304 | 6,505,868 | 9,515,201 | 7,407,909 |
| 96 | | | | | | | | | |
| 97 | Admin and General | | | | | | | | |
| 98 | Outside Services Employed | | | | | | | | |
| 101 | Total Litigation | | 3,510 | 33,002 | 7,176 | 4,609 | 19,936 | 38,682 | 4,521 |
| 110 | Total Non-Litigation | | 546,397 | 305,890 | 238,866 | 854,848 | (176,115) | 268,937 | 238,647 |
| 111 | Total | 923 | 549,907 | 338,891 | 246,042 | 859,457 | (156,179) | 307,618 | 243,168 |
| 112 | | | | | | | | | |
| 113 | Admin and General | | | | | | | | |
| 114 | Injuries and Damages | | | | | | | | |
| 118 | Total Litigation | | 169,942 | 288,644 | 369,195 | 320,862 | 327,316 | (1,950,553) | 426,540 |
| 139 | Total Non-Litigation | | 657,731 | 580,803 | 296,802 | 592,366 | 648,053 | 2,778,589 | 330,848 |
| 140 | Total | 925 | 827,672 | 869,447 | 665,996 | 913,228 | 975,369 | 828,036 | 757,388 |
| 141 | | | | | | | | | |

| | A | B | J | K | L | M | N | O | P |
|---|---|---|---|---|---|---|---|---|---|
| 1 | **PNM Exhibit RNG-4** | | | | | | | | |
| 2 | **Schedule H-1** | | | | | | | | |
| 3 | **Operations and Maintenance Expense - Litigation Expense** | | | | | | | | |
| 4 | **Base Period Ending 6/30/2026** | | | | | | | | |
| 5 | **Test Period Ending 9/30/2028** | | | | | | | | |
| 6 | **Base Period data is historical information from the Company's B** | | | | | | | | |
| 7 | O&M Model Lead Sheet | | | | | | | | |
| 8 | | | | | | | | | |
| 9 | **Descriptions** | **FERC** | **Feb-26** | **Mar-26** | **Apr-26** | **May-26** | **Jun-26** | **Total Company Base Period** | **Total Company COS Reclassification Adjustment** |
| 10 | | | | | | | | | |
| 11 | Steam Production Operation | | | | | | | | |
| 14 | Total Litigation | | 226 | 23 | (23) | - | 2,074 | 2,300 | - |
| 44 | Total Non-Litigation | | 155,529 | 171,385 | 296,258 | 317,528 | 17,697 | 2,199,857 | - |
| 45 | Total | 500 | 155,755 | 171,408 | 296,236 | 317,528 | 19,771 | 2,202,157 | - |
| 46 | | | | | | | | | |
| 47 | Other Production Operation | | | | | | | | |
| 51 | Total Litigation | | 4,762 | 10,907 | (1,062) | 6,080 | 9,713 | 53,783 | - |
| 69 | Total Non-Litigation | | 374,027 | 724,222 | 365,388 | 309,311 | 314,419 | 4,897,840 | - |
| 70 | Total | 546 | 378,789 | 735,129 | 364,326 | 315,390 | 324,132 | 4,951,623 | - |
| 71 | | | | | | | | | |
| 72 | Admin Expenses Transferred--Credit (Production) | | | | | | | | |
| 75 | Total Litigation | | 1,113 | 6,447 | 5,702 | 5,420 | 3,813 | 34,581 | - |
| 78 | Total Non-Litigation | | 1,906,197 | 2,028,667 | 2,059,643 | 1,753,701 | 1,686,699 | 23,971,835 | - |
| 79 | Total | 922.9 | 1,907,310 | 2,035,114 | 2,065,345 | 1,759,121 | 1,690,512 | 24,006,416 | - |
| 80 | Admin Expenses Transferred--Credit (Transmission) | | | | | | | | |
| 83 | Total Litigation | | 7,428 | 9,939 | 5,373 | 7,265 | 17,582 | 100,569 | - |
| 86 | Total Non-Litigation | | 1,547,702 | 1,888,171 | 1,850,266 | 1,610,620 | 1,537,026 | 20,052,912 | - |
| 87 | Total | 922.9 | 1,555,131 | 1,898,109 | 1,855,639 | 1,617,885 | 1,554,608 | 20,153,481 | - |
| 88 | Admin Expenses Transferred--Credit (Distribution) | | | | | | | | |
| 91 | Total Litigation | | 15,753 | 22,117 | (422) | 10,272 | 32,616 | 157,298 | - |
| 94 | Total Non-Litigation | | 6,967,406 | 8,296,489 | 7,994,458 | 7,369,528 | 6,100,861 | 87,415,532 | - |
| 95 | Total | 922.9 | 6,983,159 | 8,318,606 | 7,994,036 | 7,379,800 | 6,133,477 | 87,572,831 | - |
| 96 | | | | | | | | | |
| 97 | Admin and General | | | | | | | | |
| 98 | Outside Services Employed | | | | | | | | |
| 101 | Total Litigation | | 8,760 | 1,288 | 5,375 | 3,062 | 22,748 | 152,668 | - |
| 110 | Total Non-Litigation | | 397,286 | 1,334,973 | 201,806 | 184,153 | 704,762 | 5,100,449 | - |
| 111 | Total | 923 | 406,046 | 1,336,260 | 207,181 | 187,215 | 727,509 | 5,253,116 | - |
| 112 | | | | | | | | | |
| 113 | Admin and General | | | | | | | | |
| 114 | Injuries and Damages | | | | | | | | |
| 118 | Total Litigation | | 56,105 | 346,802 | 322,106 | 329,655 | 212,709 | 1,219,323 | - |
| 139 | Total Non-Litigation | | 787,980 | 80,764 | 592,494 | 451,101 | 137,184 | 7,934,715 | - |
| 140 | Total | 925 | 844,085 | 427,566 | 914,600 | 780,756 | 349,893 | 9,154,038 | - |
| 141 | | | | | | | | | |

| | A | B | Q | R | S | T | U | V |
|---|---|---|---|---|---|---|---|---|
| 1 | **PNM Exhibit RNG-4** | | | | | | | |
| 2 | **Schedule H-1** | | | | | | | |
| 3 | **Operations and Maintenance Expense - Litigation Expense** | | | | | | | |
| 4 | **Base Period Ending 6/30/2026** | | | | | | | |
| 5 | **Test Period Ending 9/30/2028** | | | | | | | |
| 6 | **Base Period data is historical information from the Company's B** | | | | | | | |
| 7 | O&M Model Lead Sheet | | | | | | | |
| 8 | | | | | | | | |
| 9 | **Descriptions** | **FERC** | **Base Period Adjustments** | **Adjusted Base Period** | **Linkage Period One 7/2026 - 6/2027** | **Linkage Period Two 10/2026 - 9/2027** | **Total Company Test Period** | **Adjusted Base and Test Periods Variance** |
| 10 | | | | | | | | |
| 11 | Steam Production Operation | | | | | | | |
| 14 | Total Litigation | | - | 2,300 | 2,369 | 2,369 | 2,441 | 140 |
| 44 | Total Non-Litigation | | (125,726) | 2,074,131 | 2,130,938 | 2,133,646 | 2,200,418 | 126,287 |
| 45 | Total | 500 | (125,726) | 2,076,431 | 2,133,307 | 2,136,016 | 2,202,859 | 126,428 |
| 46 | | | | | | | | |
| 47 | Other Production Operation | | | | | | | |
| 51 | Total Litigation | | - | 53,783 | 55,397 | 55,397 | 57,059 | 3,275 |
| 69 | Total Non-Litigation | | (472,791) | 4,425,049 | 4,544,323 | 4,551,061 | 4,694,467 | 269,418 |
| 70 | Total | 546 | (472,791) | 4,478,832 | 4,599,720 | 4,606,458 | 4,751,526 | 272,693 |
| 71 | | | | | | | | |
| 72 | Admin Expenses Transferred--Credit (Production) | | | | | | | |
| 75 | Total Litigation | | - | 34,581 | 35,618 | 35,618 | 36,687 | 2,106 |
| 78 | Total Non-Litigation | | (10,547,781) | 13,424,054 | 12,941,770 | 13,021,594 | 14,859,472 | 1,435,418 |
| 79 | Total | 922.9 | (10,547,781) | 13,458,635 | 12,977,388 | 13,057,213 | 14,896,159 | 1,437,524 |
| 80 | Admin Expenses Transferred--Credit (Transmission) | | | | | | | |
| 83 | Total Litigation | | - | 100,569 | 103,586 | 103,586 | 106,693 | 6,125 |
| 86 | Total Non-Litigation | | (8,110,961) | 11,941,951 | 11,890,028 | 11,942,566 | 12,806,565 | 864,614 |
| 87 | Total | 922.9 | (8,110,961) | 12,042,520 | 11,993,614 | 12,046,151 | 12,913,259 | 870,739 |
| 88 | Admin Expenses Transferred--Credit (Distribution) | | | | | | | |
| 91 | Total Litigation | | - | 157,298 | 162,017 | 162,017 | 166,878 | 9,579 |
| 94 | Total Non-Litigation | | (36,924,065) | 50,491,467 | 50,197,205 | 50,415,995 | 55,743,579 | 5,252,112 |
| 95 | Total | 922.9 | (36,924,065) | 50,648,765 | 50,359,223 | 50,578,012 | 55,910,457 | 5,261,691 |
| 96 | | | | | | | | |
| 97 | Admin and General | | | | | | | |
| 98 | Outside Services Employed | | | | | | | |
| 101 | Total Litigation | | - | 152,668 | 157,248 | 157,248 | 161,965 | 9,297 |
| 110 | Total Non-Litigation | | (4,347,826) | 752,623 | 629,947 | 629,947 | 648,846 | (103,777) |
| 111 | Total | 923 | (4,347,826) | 905,291 | 787,195 | 787,195 | 810,811 | (94,480) |
| 112 | | | | | | | | |
| 113 | Admin and General | | | | | | | |
| 114 | Injuries and Damages | | | | | | | |
| 118 | Total Litigation | | - | 1,219,323 | 1,255,903 | 1,255,903 | 1,293,580 | 74,257 |
| 139 | Total Non-Litigation | | (44,743) | 7,889,972 | 6,251,336 | 6,499,385 | 7,543,060 | (346,913) |
| 140 | Total | 925 | (44,743) | 9,109,295 | 7,507,238 | 7,755,288 | 8,836,639 | (272,656) |
| 141 | | | | | | | | |

# PNM Schedule H-2

Cost of fuel

| | A | B | C | D | E | F | G |
|---|---|---|---|---|---|---|---|
| 1 | **Public Service Company of New Mexico** | | | | | | |
| 2 | **Schedule H-2 Base** | | | | | | |
| 3 | **Cost of Fuel** | | | | | | |
| 4 | **Base Period Ending 06/30/2026** | | | | | | |
| 5 | **This schedule is sponsored by PNM Witness Gutierrez** | | | | | | |
| 6 | | | | | | | |
| 7 | **Description** | **Jul-25** | **Aug-25** | **Sep-25** | **Oct-25** | **Nov-25** | **Dec-25** |
| 8 | | | | | | | |
| 9 | **Coal** | | | | | | |
| 10 | Cost of Coal - $ | 3,347,552 | 3,329,531 | 3,244,791 | 3,364,666 | 3,423,973 | 3,884,796 |
| 11 | Quantity - MMBtu | 283,450 | 317,928 | 312,327 | 389,528 | 550,508 | 937,245 |
| 12 | Unit Cost - $/MMBtu | 11.81 | 10.47 | 10.39 | 8.64 | 6.22 | 4.14 |
| 13 | | | | | | | |
| 14 | **Natural Gas** | | | | | | |
| 15 | Cost of Natural Gas - $ (1) | 5,100,919 | 4,532,421 | 1,091,274 | 206,540 | 3,028,526 | 2,425,931 |
| 16 | Quantity - MMBtu | 1,879,273 | 2,007,049 | 1,689,811 | 1,307,895 | 1,876,087 | 1,606,102 |
| 17 | Unit Cost - $/MMBtu | 2.71 | 2.26 | 0.65 | 0.16 | 1.61 | 1.51 |
| 18 | | | | | | | |
| 19 | **Fuel Oil** | | | | | | |
| 20 | Cost of Fuel Oil - $ (2) | - | - | - | - | - | 220 |
| 21 | Quantity - MMBtu | - | - | - | - | - | - |
| 22 | | | | | | | |
| 23 | | | | | | | |
| 24 | **Nuclear** | | | | | | |
| 25 | Cost of Nuclear - $ | 1,471,186 | 1,471,283 | 1,418,210 | 962,560 | 766,618 | 1,422,820 |
| 26 | Quantity - MMBtu | 2,217,304 | 2,217,150 | 2,137,724 | 1,279,934 | 1,143,229 | 2,077,635 |
| 27 | Unit Cost - $/MMBtu | 0.66 | 0.66 | 0.66 | 0.75 | 0.67 | 0.68 |
| 28 | | | | | | | |
| 29 | (1) Natural gas includes FERC 501 and FERC 547 gas accounts and includes cost of gas and variable gas transportation | | | | | | |
| 30 | (2) Fuel oil includes FERC 501 and FERC 547 oil accounts | | | | | | |
| 31 | | | | | | | |

| | A | H | I | J | K | L |
|---|---|---|---|---|---|---|
| 1 | **Public Service Company of New Mexico** | | | | | |
| 2 | **Schedule H-2 Base** | | | | | |
| 3 | **Cost of Fuel** | | | | | |
| 4 | **Base Period Ending 06/30/2026** | | | | | |
| 5 | **This schedule is sponsored by PNM Witness Gutierrez** | | | | | |
| 6 | | | | | | |
| 7 | **Description** | **Jan-26** | **Feb-26** | **Mar-26** | **Apr-26** | **May-26** |
| 8 | | | | | | |
| 9 | **Coal** | | | | | |
| 10 | Cost of Coal - $ | 3,916,898 | 2,916,352 | 2,359,592 | 2,161,613 | 2,957,652 |
| 11 | Quantity - MMBtu | 959,843 | 588,434 | 627,350 | 434,018 | 940,023 |
| 12 | Unit Cost - $/MMBtu | 4.08 | 4.96 | 3.76 | 4.98 | 3.15 |
| 13 | | | | | | |
| 14 | **Natural Gas** | | | | | |
| 15 | Cost of Natural Gas - $ (1) | 7,375,585 | 1,037,631 | (840,956) | (1,639,086) | (1,558,057) |
| 16 | Quantity - MMBtu | 1,663,936 | 1,491,457 | 1,020,779 | 812,778 | 559,383 |
| 17 | Unit Cost - $/MMBtu | 4.43 | 0.70 | (0.82) | (2.02) | (2.79) |
| 18 | | | | | | |
| 19 | **Fuel Oil** | | | | | |
| 20 | Cost of Fuel Oil - $ (2) | 2,005 | - | 831 | 69,120 | 13,395 |
| 21 | Quantity - MMBtu | - | - | - | - | - |
| 22 | | | | | | |
| 23 | | | | | | |
| 24 | **Nuclear** | | | | | |
| 25 | Cost of Nuclear - $ | 1,520,249 | 1,361,891 | 1,234,290 | 930,256 | 1,339,991 |
| 26 | Quantity - MMBtu | 2,217,360 | 1,986,481 | 1,826,850 | 1,225,685 | 1,995,561 |
| 27 | Unit Cost - $/MMBtu | 0.69 | 0.69 | 0.68 | 0.76 | 0.67 |
| 28 | | | | | | |
| 29 | (1) Natural gas includes FERC 501 and FERC 547 gas accou | | | | | |
| 30 | (2) Fuel oil includes FERC 501 and FERC 547 oil accounts | | | | | |
| 31 | | | | | | |

| | A | M | N | O |
|---|---|---|---|---|
| 1 | **Public Service Company of New Mexico** | | | |
| 2 | **Schedule H-2 Base** | | | |
| 3 | **Cost of Fuel** | | | |
| 4 | **Base Period Ending 06/30/2026** | | | |
| 5 | **This schedule is sponsored by PNM Witness Gutierrez** | | | |
| 6 | | | | |
| 7 | **Description** | **Jun-26** | **Base Period Total** | **Reference** |
| 8 | | | | |
| 9 | **Coal** | | | |
| 10 | Cost of Coal - $ | 3,233,612 | 38,141,028 | WP Fuel-4: Base Detail - Line 76 |
| 11 | Quantity - MMBtu | 954,126 | 7,294,778 | WP Fuel-4: Base Detail - Lines 46 |
| 12 | Unit Cost - $/MMBtu | 3.39 | 5.23 | Line 10 / Line 11 |
| 13 | | | | |
| 14 | **Natural Gas** | | | |
| 15 | Cost of Natural Gas - $ (1) | 2,081,913 | 22,842,640 | WP Fuel-4: Base Detail - Lines 77 + 78 + 188 + 190 + 191 + 385 + 386 + 387 |
| 16 | Quantity - MMBtu | 1,437,297 | 17,351,847 | WP Fuel-4: Base Detail - Lines 72 + 194 |
| 17 | Unit Cost - $/MMBtu | 1.45 | 1.32 | Line 15 / Line 16 |
| 18 | | | | |
| 19 | **Fuel Oil** | | | |
| 20 | Cost of Fuel Oil - $ (2) | 5,269 | 90,840 | WP Fuel-4: Base Detail - Lines 79 + 189 |
| 21 | Quantity - MMBtu | - | - | WP Fuel-4: Base Detail - Line 195 |
| 22 | | | | |
| 23 | | | | |
| 24 | **Nuclear** | | | |
| 25 | Cost of Nuclear - $ | 1,443,594 | 15,342,950 | WP Fuel-4: Base Detail - Line 202 |
| 26 | Quantity - MMBtu | 2,140,007 | 22,464,920 | WP Fuel-4: Base Detail - Line 208 |
| 27 | Unit Cost - $/MMBtu | 0.67 | 0.68 | Line 25/ Line 26 |
| 28 | | | | |
| 29 | (1) Natural gas includes FERC 501 and FERC 547 gas accou | | | |
| 30 | (2) Fuel oil includes FERC 501 and FERC 547 oil accounts | | | |
| 31 | | | | |

| | A | B | C | D | E | F |
|---|---|---|---|---|---|---|
| 1 | **Public Service Company of New Mexico** | | | | | |
| 2 | **Schedule H-2 Linkage** | | | | | |
| 3 | **Cost of Fuel** | | | | | |
| 4 | **Linkage Ending 9/30/2027** | | | | | |
| 5 | **This schedule is sponsored by PNM Witness Gutierrez** | | | | | |
| 6 | **Description** | **Jul-26** | **Aug-26** | **Sep-26** | **Oct-26** | **Nov-26** |
| 7 | | | | | | |
| 8 | **Coal** | | | | | |
| 9 | Cost of Coal - $ | 4,605,910 | 4,635,498 | 4,295,074 | 4,477,694 | 5,220,901 |
| 10 | Quantity - MMBtu | 986,276 | 986,276 | 954,461 | 986,276 | 954,461 |
| 11 | Unit Cost - $/MMBtu | 4.67 | 4.70 | 4.50 | 4.54 | 5.47 |
| 12 | | | | | | |
| 13 | **Natural Gas** | | | | | |
| 14 | Cost of Natural Gas - $ | 6,765,075 | 10,351,125 | 5,634,433 | 3,208,680 | 3,679,020 |
| 15 | Quantity - MMBtu | 3,597,122 | 4,166,905 | 2,892,737 | 1,602,491 | 1,473,490 |
| 16 | Unit Cost - $/MMBtu | 1.88 | 2.48 | 1.95 | 2.00 | 2.50 |
| 17 | | | | | | |
| 18 | **Fuel Oil** | | | | | |
| 19 | Cost of Fuel Oil - $ | - | - | - | - | - |
| 20 | Quantity - MMBtu | - | - | - | - | - |
| 21 | | | | | | |
| 22 | | | | | | |
| 23 | **Nuclear** | | | | | |
| 24 | Cost of Nuclear - $ | 1,437,440 | 1,437,440 | 1,088,960 | 1,352,946 | 1,380,305 |
| 25 | Quantity - MMBtu | 2,210,419 | 2,210,419 | 2,139,115 | 1,995,022 | 2,013,158 |
| 26 | Unit Cost - $/MMBtu | 0.65 | 0.65 | 0.51 | 0.68 | 0.69 |
| 27 | | | | | | |
| 28 | | | | | | |

| | A | G | H | I | J | K | L |
|---|---|---|---|---|---|---|---|
| 1 | **Public Service Company of New Mexico** | | | | | | |
| 2 | **Schedule H-2 Linkage** | | | | | | |
| 3 | **Cost of Fuel** | | | | | | |
| 4 | **Linkage Ending 9/30/2027** | | | | | | |
| 5 | **This schedule is sponsored by PNM Witness Gutierrez** | | | | | | |
| 6 | **Description** | **Dec-26** | **Jan-27** | **Feb-27** | **Mar-27** | **Apr-27** | **May-27** |
| 7 | | | | | | | |
| 8 | **Coal** | | | | | | |
| 9 | Cost of Coal - $ | 6,065,599 | 6,577,708 | 4,765,380 | 3,215,208 | 2,473,874 | 2,971,505 |
| 10 | Quantity - MMBtu | 986,276 | 1,026,164 | 773,601 | 624,312 | 613,865 | 741,024 |
| 11 | Unit Cost - $/MMBtu | 6.15 | 6.41 | 6.16 | 5.15 | 4.03 | 4.01 |
| 12 | | | | | | | |
| 13 | **Natural Gas** | | | | | | |
| 14 | Cost of Natural Gas - $ | 6,031,102 | 7,189,078 | 4,691,302 | 2,303,743 | 2,366,998 | 1,723,848 |
| 15 | Quantity - MMBtu | 1,859,434 | 1,783,032 | 1,291,922 | 1,072,896 | 1,388,842 | 999,278 |
| 16 | Unit Cost - $/MMBtu | 3.24 | 4.03 | 3.63 | 2.15 | 1.70 | 1.73 |
| 17 | | | | | | | |
| 18 | **Fuel Oil** | | | | | | |
| 19 | Cost of Fuel Oil - $ | - | - | - | - | - | - |
| 20 | Quantity - MMBtu | - | - | - | - | - | - |
| 21 | | | | | | | |
| 22 | | | | | | | |
| 23 | **Nuclear** | | | | | | |
| 24 | Cost of Nuclear - $ | 1,176,647 | 1,566,028 | 1,527,905 | 1,137,102 | 1,421,239 | 1,611,420 |
| 25 | Quantity - MMBtu | 2,210,419 | 2,210,419 | 1,996,508 | 2,210,419 | 1,210,185 | 1,946,393 |
| 26 | Unit Cost - $/MMBtu | 0.53 | 0.71 | 0.77 | 0.51 | 1.17 | 0.83 |
| 27 | | | | | | | |
| 28 | | | | | | | |

| | A | M | N | O | P | Q |
|---|---|---|---|---|---|---|
| 1 | **Public Service Company of New Mexico** | | | | | |
| 2 | **Schedule H-2 Linkage** | | | | | |
| 3 | **Cost of Fuel** | | | | | |
| 4 | **Linkage Ending 9/30/2027** | | | | | |
| 5 | **This schedule is sponsored by PNM Witness Gutierrez** | | | | | **Total** |
| 6 | **Description** | **Jun-27** | **Jul-27** | **Aug-27** | **Sep-27** | **Jul 26 - Jun 27** |
| 7 | | | | | | |
| 8 | **Coal** | | | | | |
| 9 | Cost of Coal - $ | 3,966,692 | 5,143,810 | 5,225,830 | 5,002,137 | 53,271,045 |
| 10 | Quantity - MMBtu | 955,830 | 1,171,711 | 1,171,711 | 1,131,705 | 10,588,821 |
| 11 | Unit Cost - $/MMBtu | 4.15 | 4.39 | 4.46 | 4.42 | 5.03 |
| 12 | | | | | | |
| 13 | **Natural Gas** | | | | | |
| 14 | Cost of Natural Gas - $ | 3,775,069 | 9,313,640 | 10,811,667 | 5,624,552 | 57,719,473 |
| 15 | Quantity - MMBtu | 2,008,414 | 4,232,262 | 4,660,985 | 2,989,935 | 24,136,564 |
| 16 | Unit Cost - $/MMBtu | 1.88 | 2.20 | 2.32 | 1.88 | 2.39 |
| 17 | | | | | | |
| 18 | **Fuel Oil** | | | | | |
| 19 | Cost of Fuel Oil - $ | - | - | - | - | - |
| 20 | Quantity - MMBtu | - | - | - | - | - |
| 21 | | | | | | |
| 22 | | | | | | |
| 23 | **Nuclear** | | | | | |
| 24 | Cost of Nuclear - $ | 1,253,869 | 1,707,465 | 1,707,465 | 1,252,649 | 16,391,302 |
| 25 | Quantity - MMBtu | 2,139,115 | 2,210,419 | 2,210,419 | 2,139,115 | 24,491,592 |
| 26 | Unit Cost - $/MMBtu | 0.59 | 0.77 | 0.77 | 0.59 | 0.67 |
| 27 | | | | | | |
| 28 | | | | | | |

| | A | R | S |
|---|---|---|---|
| 1 | **Public Service Company of New Mexico** | | |
| 2 | **Schedule H-2 Linkage** | | |
| 3 | **Cost of Fuel** | | |
| 4 | **Linkage Ending 9/30/2027** | | |
| 5 | **This schedule is sponsored by PNM Witness Gutierrez** | **Total** | |
| 6 | **Description** | **Oct 26 - Sep 27** | **WP Fuel-9: Linkage Detail Reference** |
| 7 | | | |
| 8 | **Coal** | | |
| 9 | Cost of Coal - $ | 55,106,339 | WP Fuel-9: Linkage Detail - Line 75 |
| 10 | Quantity - MMBtu | 11,136,934 | WP Fuel-9: Linkage Detail - Lines 45 |
| 11 | Unit Cost - $/MMBtu | 4.95 | Line 9/ Line 10 |
| 12 | | | |
| 13 | **Natural Gas** | | |
| 14 | Cost of Natural Gas - $ | 60,718,699 | WP Fuel-9: Linkage Detail - Lines 76 + 77 + 187 + 189 + 190 + 384 + 385 + 386 |
| 15 | Quantity - MMBtu | 25,362,983 | WP Fuel-9: Linkage Detail - Lines 71 + 193 |
| 16 | Unit Cost - $/MMBtu | 2.39 | Line 14 / Line 15 |
| 17 | | | |
| 18 | **Fuel Oil** | | |
| 19 | Cost of Fuel Oil - $ | - | WP Fuel-9: Linkage Detail - Lines 78 + 188 |
| 20 | Quantity - MMBtu | - | WP Fuel-9: Linkage Detail - Line 194 |
| 21 | | | |
| 22 | | | |
| 23 | **Nuclear** | | |
| 24 | Cost of Nuclear - $ | 17,095,039 | WP Fuel-9: Linkage Detail - Line 201 |
| 25 | Quantity - MMBtu | 24,491,592 | WP Fuel-9: Linkage Detail - Line 207 |
| 26 | Unit Cost - $/MMBtu | 0.70 | Line 24/ Line 25 |
| 27 | | | |
| 28 | | | |

| | A | B | C | D | E | F | G | H | I | J |
|---|---|---|---|---|---|---|---|---|---|---|
| 1 | **Public Service Company of New Mexico** | | | | | | | | | |
| 2 | **Schedule H-2 Test** | | | | | | | | | |
| 3 | **Cost of Fuel** | | | | | | | | | |
| 4 | **Test Period Ending 9/30/2028** | | | | | | | | | |
| 5 | **This schedule is sponsored by PNM Witness Gutierrez** | | | | | | | | | |
| 6 | **Description** | **Oct-27** | **Nov-27** | **Dec-27** | **Jan-28** | **Feb-28** | **Mar-28** | **Apr-28** | **May-28** | **Jun-28** |
| 7 | | | | | | | | | | |
| 8 | **Coal** | | | | | | | | | |
| 9 | Cost of Coal - $ | 5,950,550 | 5,558,686 | 7,726,934 | 6,498,101 | 4,965,335 | 3,170,463 | 1,981,874 | 2,942,533 | 4,146,227 |
| 10 | Quantity - MMBtu | 1,068,321 | 1,052,781 | 1,168,976 | 1,053,177 | 838,739 | 626,574 | 500,473 | 743,064 | 1,011,275 |
| 11 | Unit Cost - $/MMBtu | 5.57 | 5.28 | 6.61 | 6.17 | 5.92 | 5.06 | 3.96 | 3.96 | 4.10 |
| 12 | | | | | | | | | | |
| 13 | **Natural Gas** | | | | | | | | | |
| 14 | Cost of Natural Gas - $ | 3,379,666 | 5,073,150 | 8,295,745 | 9,669,675 | 8,105,600 | 2,544,086 | 1,893,395 | 1,325,162 | 4,156,761 |
| 15 | Quantity - MMBtu | 2,003,562 | 2,040,942 | 2,317,841 | 2,412,932 | 2,358,930 | 1,280,242 | 1,259,050 | 973,165 | 2,105,458 |
| 16 | Unit Cost - $/MMBtu | 1.69 | 2.49 | 3.58 | 4.01 | 3.44 | 1.99 | 1.50 | 1.36 | 1.97 |
| 17 | | | | | | | | | | |
| 18 | **Fuel Oil** | | | | | | | | | |
| 19 | Cost of Fuel Oil - $ | - | - | - | - | - | - | - | - | - |
| 20 | Quantity - MMBtu | - | - | - | - | - | - | - | - | - |
| 21 | | | | | | | | | | |
| 22 | | | | | | | | | | |
| 23 | **Nuclear** | | | | | | | | | |
| 24 | Cost of Nuclear - $ | 1,577,334 | 1,527,017 | 1,354,682 | 1,783,238 | 1,690,157 | 1,498,356 | 1,562,865 | 1,780,888 | 1,459,896 |
| 25 | Quantity - MMBtu | 1,504,313 | 1,434,288 | 2,210,419 | 2,210,419 | 2,067,812 | 2,210,419 | 1,916,291 | 2,166,164 | 2,139,115 |
| 26 | Unit Cost - $/MMBtu | 1.05 | 1.06 | 0.61 | 0.81 | 0.82 | 0.68 | 0.82 | 0.82 | 0.68 |
| 27 | | | | | | | | | | |
| 28 | | | | | | | | | | |
| 29 | | | | | | | | | | |

| | A | K | L | M | N | O | P |
|---|---|---|---|---|---|---|---|
| 1 | **Public Service Company of New Mexico** | | | | | | |
| 2 | **Schedule H-2 Test** | | | | | | |
| 3 | **Cost of Fuel** | | | | | | |
| 4 | **Test Period Ending 9/30/2028** | | | | | | |
| 5 | **This schedule is sponsored by PNM Witn** | | | | | | |
| 6 | **Description** | **Jul-28** | **Aug-28** | **Sep-28** | **Test Period Total** | **Adjustments** | **Adjusted Test Period Total** |
| 7 | | | | | | | |
| 8 | **Coal** | | | | | | |
| 9 | Cost of Coal - $ | 5,014,922 | 5,132,093 | 4,737,177 | 57,824,895 | | 57,824,895 |
| 10 | Quantity - MMBtu | 1,171,711 | 1,171,711 | 1,109,409 | 11,516,212 | | 11,516,212 |
| 11 | Unit Cost - $/MMBtu | 4.28 | 4.38 | 4.27 | 5.02 | | 5.02 |
| 12 | | | | | | | |
| 13 | **Natural Gas** | | | | | | |
| 14 | Cost of Natural Gas - $ | 13,556,346 | 15,841,578 | 8,383,591 | 82,224,754 | | 82,224,754 |
| 15 | Quantity - MMBtu | 5,246,769 | 5,349,453 | 3,020,626 | 30,368,971 | | 30,368,971 |
| 16 | Unit Cost - $/MMBtu | 2.58 | 2.96 | 2.78 | 2.71 | | 2.71 |
| 17 | | | | | | | |
| 18 | **Fuel Oil** | | | | | | |
| 19 | Cost of Fuel Oil - $ | - | - | - | - | | - |
| 20 | Quantity - MMBtu | - | - | - | - | | - |
| 21 | | | | | | | |
| 22 | | | | | | | |
| 23 | **Nuclear** | | | | | | |
| 24 | Cost of Nuclear - $ | 1,806,661 | 1,806,661 | 1,458,867 | 19,306,622 | | 19,306,622 |
| 25 | Quantity - MMBtu | 2,210,419 | 2,210,419 | 2,139,115 | 24,419,195 | | 24,419,195 |
| 26 | Unit Cost - $/MMBtu | 0.82 | 0.82 | 0.68 | 0.79 | | 0.79 |
| 27 | | | | | | | |
| 28 | | | | | | | |
| 29 | | | | | | | |

| | A | Q |
|---|---|---|
| 1 | **Public Service Company of New Mexico** | |
| 2 | **Schedule H-2 Test** | |
| 3 | **Cost of Fuel** | |
| 4 | **Test Period Ending 9/30/2028** | |
| 5 | **This schedule is sponsored by PNM Witn** | |
| 6 | **Description** | **WP Fuel-6: Test Detail Reference** |
| 7 | | |
| 8 | **Coal** | |
| 9 | Cost of Coal - $ | WP Fuel-6: Test Detail Detail - Line 75 |
| 10 | Quantity - MMBtu | WP Fuel-6: Test Detail Detail - Lines 45 |
| 11 | Unit Cost - $/MMBtu | Line 9/ Line 10 |
| 12 | | |
| 13 | **Natural Gas** | |
| 14 | Cost of Natural Gas - $ | WP Fuel-6: Test Detail Detail - Lines 76 + 77 + 187 + 189 + 190 + 385 + 386 + 387 |
| 15 | Quantity - MMBtu | WP Fuel-6: Test Detail Detail - Lines 71 + 193 |
| 16 | Unit Cost - $/MMBtu | Line 14 / Line 15 |
| 17 | | |
| 18 | **Fuel Oil** | |
| 19 | Cost of Fuel Oil - $ | WP Fuel-6: Test Detail Detail - Lines 78 + 188 |
| 20 | Quantity - MMBtu | WP Fuel-6: Test Detail Detail - Line 194 |
| 21 | | |
| 22 | | |
| 23 | **Nuclear** | |
| 24 | Cost of Nuclear - $ | WP Fuel-6: Test Detail Detail - Line 201 |
| 25 | Quantity - MMBtu | WP Fuel-6: Test Detail Detail - Line 207 |
| 26 | Unit Cost - $/MMBtu | Line 24/ Line 25 |
| 27 | | |
| 28 | | |
| 29 | | |

# PNM Schedule H-3

Revenue generated through the fuel adjustment clause

| | A | B | C | D | E | F | G |
|---|---|---|---|---|---|---|---|
| 1 | **Public Service Company of New Mexico** | | | | | | |
| 2 | **Schedule H-3 Base** | | | | | | |
| 3 | **Revenue Generated From PNM Retail Fuel and Purchased Power Clause** | | | | | | |
| 4 | **Base Period Ending 6/30/2026** | | | | | | |
| 5 | **This schedule is sponsored by PNM Witness Gutierrez** | | | | | | |
| 6 | | | | | | | |
| 7 | | **Filed Fuel Clause Reports** | **Col D / Col B** | **Filed Fuel Clause Reports** | **Filed Fuel Clause Reports** | **Filed Fuel Clause Reports** | **Col J - Col D** |
| 8 | **Months** | **kWh Sales** | **Billed FPPCAC Rate $/kWh** | **Total Fuel Revenue** | **Fuel Costs** | **Carrying Charges on Balancing Account** | **(Over) / Under Collection** |
| 9 | | | | | | | |
| 10 | Carryforward | | | | | | |
| 11 | Jul-25 | 707,401,922 | 0.035024 | $ 24,776,185 | $ 28,963,431 | $ 43,657 | $ 4,230,903 |
| 12 | Aug-25 | 706,507,127 | 0.035002 | $ 24,729,344 | $ 33,646,933 | $ 52,119 | $ 8,969,708 |
| 13 | Sep-25 | 673,185,635 | 0.034947 | $ 23,525,631 | $ 14,525,310 | $ 70,058 | $ (8,930,262) |
| 14 | Oct-25 | 565,425,773 | 0.043608 | $ 24,656,992 | $ 15,004,365 | $ 52,198 | $ (9,600,430) |
| 15 | Nov-25 | 412,377,936 | 0.044114 | $ 18,191,543 | $ 11,576,984 | $ 32,997 | $ (6,581,562) |
| 16 | Dec-25 | 563,847,511 | 0.040426 | $ 22,794,247 | $ 12,124,531 | $ 19,834 | $ (10,649,883) |
| 17 | Jan-26 | 571,643,599 | 0.025425 | $ 14,534,143 | $ 15,161,734 | $ (1,466) | $ 626,125 |
| 18 | Feb-26 | 548,136,270 | 0.024849 | $ 13,620,834 | $ 9,283,496 | $ (214) | $ (4,337,551) |
| 19 | Mar-26 | 549,208,220 | 0.023538 | $ 12,927,326 | $ 7,134,605 | $ (8,889) | $ (5,801,610) |
| 20 | Apr-26 | 490,976,725 | 0.022328 | $ 10,962,465 | $ 10,151,953 | $ (20,492) | $ (831,003) |
| 21 | May-26 | 488,545,694 | 0.022928 | $ 11,201,147 | $ 12,184,464 | $ (22,154) | $ 961,163 |
| 22 | Jun-26 | 625,065,412 | 0.022796 | $ 14,249,253 | $ 13,215,442 | $ (20,232) | $ (1,054,042) |
| 23 | Total | 6,902,321,824 | | $ 216,169,109 | $ 182,973,248 | $ 197,418 | $ (32,998,443) |
| 24 | | | | | - | | |
| 25 | | | | | | | |
| 26 | | | | | | | |
| 27 | | **NOTE: Base period books and records - will not tie to adjusted base** | | | | | |

| | A | H | I | J | K | L |
|---|---|---|---|---|---|---|
| 1 | **Public Service Company of New Mexico** | | | | | |
| 2 | **Schedule H-3 Base** | | | | | |
| 3 | **Revenue Generated From PNM Retail Fuel and Purchased Power Clause** | | | | | |
| 4 | **Base Period Ending 6/30/2026** | | | | | |
| 5 | **This schedule is sponsored by PNM Witnes** | | | | | |
| 6 | | | | | | |
| 7 | | | **Previous Month + Col J - Col D** | **Col E + Col F** | | |
| 8 | **Months** | **Cumulative (Over) / Under Collection** | **Balancing Account (Over) / Under Collection** | **Total Fuel + Carrying Charge** | **Actual FPPCAC Factor** | **Reference** |
| 9 | | | | | | |
| 10 | Carryforward | | $ 21,828,624 | | | Filed Fuel Clause Reports |
| 11 | Jul-25 | $ 4,230,903 | $ 26,059,527 | $ 29,007,089 | 0.035029 | Filed Fuel Clause Reports |
| 12 | Aug-25 | $ 13,200,612 | $ 35,029,236 | $ 33,699,052 | 0.035029 | Filed Fuel Clause Reports |
| 13 | Sep-25 | $ 4,270,350 | $ 26,098,974 | $ 14,595,369 | 0.035029 | Filed Fuel Clause Reports |
| 14 | Oct-25 | $ (5,330,080) | $ 16,498,544 | $ 15,056,563 | 0.044276 | Filed Fuel Clause Reports |
| 15 | Nov-25 | $ (11,911,642) | $ 9,916,982 | $ 11,609,981 | 0.044276 | Filed Fuel Clause Reports |
| 16 | Dec-25 | $ (22,561,525) | $ (732,901) | $ 12,144,365 | 0.044276 | Filed Fuel Clause Reports |
| 17 | Jan-26 | $ (21,935,400) | $ (106,776) | $ 15,160,268 | 0.025221 | Filed Fuel Clause Reports |
| 18 | Feb-26 | $ (26,272,951) | $ (4,444,327) | $ 9,283,282 | 0.025221 | Filed Fuel Clause Reports |
| 19 | Mar-26 | $ (32,074,561) | $ (10,245,937) | $ 7,125,716 | 0.025221 | Filed Fuel Clause Reports |
| 20 | Apr-26 | $ (32,905,564) | $ (11,076,940) | $ 10,131,462 | 0.022881 | Filed Fuel Clause Reports |
| 21 | May-26 | $ (31,944,401) | $ (10,115,777) | $ 12,162,311 | 0.022881 | Filed Fuel Clause Reports |
| 22 | Jun-26 | $ (32,998,443) | $ (11,169,819) | $ 13,195,211 | 0.022881 | Filed Fuel Clause Reports |
| 23 | Total | | | $ 183,170,666 | 0.031852 | |
| 24 | | | | | | |
| 25 | | | | | | |
| 26 | | | | | | |
| 27 | | | | | | |

| | A | B | C | D | E | F | G | H |
|---|---|---|---|---|---|---|---|---|
| 1 | | | | | | | | |
| 2 | **Schedule H-3 Linkage** | | | | | | | |
| 3 | **Revenue Generated From PNM Retail Fuel and Purchased Power Clause** | | | | | | | |
| 4 | **Linkage Ending 9/30/2027** | | | | | | | |
| 5 | **This schedule is sponsored by PNM Witness Gutierrez** | | | | | | | |
| 6 | | | | | | | | |
| 7 | | **WP Fuel-11: H3-Linkage Detail Line 25** | **Current FPPCAC** | | **Col D** | **WP Fuel-11: H3-Linkage Detail Line 23** | **Col J * .024/12** | **Col K - Col E** |
| 8 | **Months** | **kWh Sales** | **Billed FPPCAC Rate $/kWh** | **Billed FPPCAC Revenue** | **Total Fuel Revenue** | **Fuel Costs** | **Carrying Charges on Balancing Account** | **(Over) / Under Collection** |
| 9 | | | | | | | | |
| 10 | Carryforward | | | | | | | |
| 11 | Jul-26 | 730,302,163 | 0.022537 | $ 18,742,945 | $ 18,742,945 | $ 12,267,533 | $ (22,340) | $ (6,497,752) |
| 12 | Aug-26 | 785,728,571 | 0.022537 | $ 16,138,180 | $ 16,138,180 | $ 12,599,354 | $ (35,335) | $ (3,574,162) |
| 13 | Sep-26 | 724,769,863 | 0.022537 | $ 14,641,108 | $ 14,641,108 | $ 7,942,837 | $ (42,483) | $ (6,740,754) |
| 14 | Oct-26 | 570,318,024 | 0.022537 | $ 12,853,492 | $ 12,853,492 | $ 9,908,715 | $ (55,965) | $ (3,000,741) |
| 15 | Nov-26 | 497,001,478 | 0.022537 | $ 11,201,127 | $ 11,201,127 | $ 11,043,162 | $ (61,966) | $ (219,931) |
| 16 | Dec-26 | 522,066,518 | 0.022537 | $ 11,766,028 | $ 11,766,028 | $ 12,404,945 | $ (62,406) | $ 576,511 |
| 17 | Jan-27 | 586,824,313 | 0.017989 | $ 10,556,593 | $ 10,556,593 | $ 16,457,984 | $ (61,253) | $ 5,840,138 |
| 18 | Feb-27 | 544,406,161 | 0.017989 | $ 9,793,517 | $ 9,793,517 | $ 12,340,064 | $ (49,573) | $ 2,496,974 |
| 19 | Mar-27 | 471,913,789 | 0.017989 | $ 8,489,426 | $ 8,489,426 | $ 10,226,784 | $ (44,579) | $ 1,692,779 |
| 20 | Apr-27 | 435,256,949 | 0.017989 | $ 7,829,993 | $ 7,829,993 | $ 10,359,892 | $ (41,194) | $ 2,488,705 |
| 21 | May-27 | 444,345,920 | 0.017989 | $ 7,993,498 | $ 7,993,498 | $ 9,202,129 | $ (36,216) | $ 1,172,415 |
| 22 | Jun-27 | 574,663,738 | 0.017989 | $ 10,337,832 | $ 10,337,832 | $ 11,527,135 | $ (33,871) | $ 1,155,432 |
| 23 | Jul-27 | 793,091,357 | 0.017989 | $ 14,267,204 | $ 14,267,204 | $ 11,456,718 | $ (31,560) | $ (2,842,047) |
| 24 | Aug-27 | 843,198,556 | 0.017989 | $ 15,168,601 | $ 15,168,601 | $ 8,798,338 | $ (37,245) | $ (6,407,508) |
| 25 | Sep-27 | 784,168,127 | 0.017989 | $ 14,106,681 | $ 14,106,681 | $ 8,174,301 | $ (50,060) | $ (5,982,440) |
| 26 | Total | 9,308,055,528 | | 183,886,224 | 183,886,224 | 164,709,890 | (666,047) | (19,842,381) |
| 27 | | | | | | | | |

| | A | I | J | K | L | M |
|---|---|---|---|---|---|---|
| 1 | | | | | | |
| 2 | **Schedule H-3 Linkage** | | | | | |
| 3 | **Revenue Generated From PNM Retail Fuel and Purchased Power Clause** | | | | | |
| 4 | **Linkage Ending 9/30/2027** | | | | | |
| 5 | **This schedule is sponsored by PNM Witne** | | | | | |
| 6 | | | | | | |
| 7 | | **Previous Month + Col H** | **Previous Month + Col H** | **Col F + Col G** | | |
| 8 | **Months** | **Cumulative (Over) / Under Collection** | **Balancing Account Over / (Under) Collection** | **Total Fuel + Carrying Charge** | **Actual FPPCAC Factor** | **Reference** |
| 9 | | | | | | |
| 10 | Carryforward | $ (32,998,443) | $ (11,169,819) | | | Filed Fuel Clause Reports |
| 11 | Jul-26 | $ (39,496,195) | $ (17,667,571) | $ 12,245,193 | 0.022537 | WP Fuel-11: H3-Linkage Detail |
| 12 | Aug-26 | $ (43,070,357) | $ (21,241,733) | $ 12,564,019 | 0.022537 | WP Fuel-11: H3-Linkage Detail |
| 13 | Sep-26 | $ (49,811,111) | $ (27,982,487) | $ 7,900,354 | 0.022537 | WP Fuel-11: H3-Linkage Detail |
| 14 | Oct-26 | $ (52,811,853) | $ (30,983,228) | $ 9,852,750 | 0.022537 | WP Fuel-11: H3-Linkage Detail |
| 15 | Nov-26 | $ (53,031,784) | $ (31,203,160) | $ 10,981,195 | 0.022537 | WP Fuel-11: H3-Linkage Detail |
| 16 | Dec-26 | $ (52,455,273) | $ (30,626,649) | $ 12,342,539 | 0.022537 | WP Fuel-11: H3-Linkage Detail |
| 17 | Jan-27 | $ (46,615,135) | $ (24,786,511) | $ 16,396,731 | 0.017989 | WP Fuel-11: H3-Linkage Detail |
| 18 | Feb-27 | $ (44,118,161) | $ (22,289,537) | $ 12,290,491 | 0.017989 | WP Fuel-11: H3-Linkage Detail |
| 19 | Mar-27 | $ (42,425,382) | $ (20,596,758) | $ 10,182,205 | 0.017989 | WP Fuel-11: H3-Linkage Detail |
| 20 | Apr-27 | $ (39,936,677) | $ (18,108,053) | $ 10,318,699 | 0.017989 | WP Fuel-11: H3-Linkage Detail |
| 21 | May-27 | $ (38,764,262) | $ (16,935,638) | $ 9,165,913 | 0.017989 | WP Fuel-11: H3-Linkage Detail |
| 22 | Jun-27 | $ (37,608,829) | $ (15,780,205) | $ 11,493,264 | 0.017989 | WP Fuel-11: H3-Linkage Detail |
| 23 | Jul-27 | $ (40,450,877) | $ (18,622,252) | $ 11,425,157 | 0.017989 | WP Fuel-11: H3-Linkage Detail |
| 24 | Aug-27 | $ (46,858,384) | $ (25,029,760) | $ 8,761,093 | 0.017989 | WP Fuel-11: H3-Linkage Detail |
| 25 | Sep-27 | $ (52,840,824) | $ (31,012,200) | $ 8,124,241 | 0.017989 | WP Fuel-11: H3-Linkage Detail |
| 26 | Total | | | 164,043,843 | 0.019809 | |
| 27 | | | | | | |

| | A | B | C | D | E | F | G | H |
|---|---|---|---|---|---|---|---|---|
| 1 | **Public Service Company of New Mexico** | | | | | | | |
| 2 | **Schedule H-3 Test** | | | | | | | |
| 3 | **Revenue Generated From PNM Retail Fuel and Purchased Power Clause** | | | | | | | |
| 4 | **Test Period Ending 9/30/2028** | | | | | | | |
| 5 | **This schedule is sponsored by PNM Witness Gutierrez** | | | | | | | |
| 6 | | **WP Fuel-12: H3-Test Detail Line 25** | **WP Fuel-12: H3-Test Detail Line 27** | **Col B * Col C** | **Col D** | **WP Fuel-12: H3-Test Detail Line 23** | **Col J * .024/12** | **Col K - Col E** |
| 7 | **Months** | **kWh Sales** | **Billed FPPCAC Rate $/kWh** | **Billed FPPCAC Revenue** | **Total Fuel Revenue** | **Fuel Costs** | **Carrying Charges on Balancing Account** | **(Over) / Under Collection** |
| 8 | | | | | | | | |
| 9 | Carryforward | | | | | | | |
| 10 | Oct-27 | 628,275,018 | 0.016950 | $ 10,649,262 | $ 10,649,262 | $ 12,797,185 | $ (62,024) | $ 2,085,899 |
| 11 | Nov-27 | 561,483,436 | 0.016950 | $ 9,517,144 | $ 9,517,144 | $ 13,628,817 | $ (57,853) | $ 4,053,820 |
| 12 | Dec-27 | 629,598,433 | 0.016950 | $ 10,671,693 | $ 10,671,693 | $ 16,697,296 | $ (49,745) | $ 5,975,857 |
| 13 | Jan-28 | 680,004,720 | 0.016950 | $ 11,526,080 | $ 11,526,080 | $ 18,371,069 | $ (37,793) | $ 6,807,196 |
| 14 | Feb-28 | 622,024,747 | 0.016950 | $ 10,543,319 | $ 10,543,319 | $ 9,928,305 | $ (24,179) | $ (639,193) |
| 15 | Mar-28 | 559,182,635 | 0.016950 | $ 9,478,146 | $ 9,478,146 | $ 8,978,680 | $ (25,457) | $ (524,923) |
| 16 | Apr-28 | 503,034,484 | 0.016950 | $ 8,526,435 | $ 8,526,435 | $ 7,880,300 | $ (26,507) | $ (672,641) |
| 17 | May-28 | 496,732,494 | 0.016950 | $ 8,419,616 | $ 8,419,616 | $ 8,124,538 | $ (27,852) | $ (322,930) |
| 18 | Jun-28 | 624,519,005 | 0.016950 | $ 10,585,597 | $ 10,585,597 | $ 10,275,773 | $ (28,498) | $ (338,322) |
| 19 | Jul-28 | 859,233,635 | 0.016950 | $ 14,564,010 | $ 14,564,010 | $ 8,130,296 | $ (29,175) | $ (6,462,889) |
| 20 | Aug-28 | 905,133,164 | 0.016950 | $ 15,342,007 | $ 15,342,007 | $ 8,961,442 | $ (42,101) | $ (6,422,666) |
| 21 | Sep-28 | 843,383,210 | 0.016950 | $ 14,295,345 | $ 14,295,345 | $ 10,364,621 | $ (54,946) | $ (3,985,670) |
| 22 | Total | 7,912,604,981 | | $ 134,118,654 | $ 134,118,654 | $ 134,138,322 | $ (466,131) | $ (446,463) |

| | A | I | J | K | L | M |
|---|---|---|---|---|---|---|
| 1 | **Public Service Company of New Mexico** | | | | | |
| 2 | **Schedule H-3 Test** | | | | | |
| 3 | **Revenue Generated From PNM Retail Fuel and Purchased Power Clause** | | | | | |
| 4 | **Test Period Ending 9/30/2028** | | | | | |
| 5 | **This schedule is sponsored by PNM Witness G** | | | | | |
| 6 | | **Previous Month + Col H** | **Previous Month + Col H** | **Col F + Col G** | | |
| 7 | **Months** | **Cumulative (Over) / Under Collection** | **Balancing Account Over / (Under) Collection** | **Total Fuel + Carrying Charge** | **Actual FPPCAC Factor** | **Reference** |
| 8 | | | | | | |
| 9 | Carryforward | $ (52,840,824) | $ (31,012,200) | | | H3-Linkage, Line 25 |
| 10 | Oct-27 | $ (50,754,925) | $ (28,926,301) | $ 12,735,160 | 0.016950 | WP Fuel-12: H3-Test Detail - Column B |
| 11 | Nov-27 | $ (46,701,105) | $ (24,872,481) | $ 13,570,964 | 0.016950 | WP Fuel-12: H3-Test Detail - Column C |
| 12 | Dec-27 | $ (40,725,248) | $ (18,896,624) | $ 16,647,551 | 0.016950 | WP Fuel-12: H3-Test Detail - Column D |
| 13 | Jan-28 | $ (33,918,052) | $ (12,089,428) | $ 18,333,276 | 0.016950 | WP Fuel-12: H3-Test Detail - Column E |
| 14 | Feb-28 | $ (34,557,245) | $ (12,728,621) | $ 9,904,127 | 0.016950 | WP Fuel-12: H3-Test Detail - Column F |
| 15 | Mar-28 | $ (35,082,168) | $ (13,253,544) | $ 8,953,222 | 0.016950 | WP Fuel-12: H3-Test Detail - Column G |
| 16 | Apr-28 | $ (35,754,809) | $ (13,926,185) | $ 7,853,793 | 0.016950 | WP Fuel-12: H3-Test Detail - Column H |
| 17 | May-28 | $ (36,077,740) | $ (14,249,116) | $ 8,096,685 | 0.016950 | WP Fuel-12: H3-Test Detail - Column I |
| 18 | Jun-28 | $ (36,416,062) | $ (14,587,438) | $ 10,247,275 | 0.016950 | WP Fuel-12: H3-Test Detail - Column J |
| 19 | Jul-28 | $ (42,878,951) | $ (21,050,327) | $ 8,101,121 | 0.016950 | WP Fuel-12: H3-Test Detail - Column K |
| 20 | Aug-28 | $ (49,301,617) | $ (27,472,993) | $ 8,919,341 | 0.016950 | WP Fuel-12: H3-Test Detail - Column L |
| 21 | Sep-28 | $ (53,287,287) | $ (31,458,663) | $ 10,309,675 | 0.016950 | WP Fuel-12: H3-Test Detail - Column M |
| 22 | Total | | | $ 133,672,191 | 0.016950 | |

# PNM Schedule H-4

Payroll distribution and associated payroll taxes

| | A | B | C | D | E |
|---|---|---|---|---|---|
| 1 | **Public Service Company of New Mexico** | | | | |
| 2 | **Schedule H-4** | | | | |
| 3 | **Payroll Distribution and Associated Payroll Taxes** | | | | |
| 4 | **Base Period Ending 6/30/2026** | | | | |
| 5 | **Test Period Ending 9/30/2028** | | | | |
| 6 | **This schedule is sponsored by PNM Witness Gutierrez** | | | | |
| 7 | | | | | |
| 8 | **Classification** | **Base Period** | **Base Period Adjustments (1)** | **Normalized Labor Adjustment** | **Overtime Labor Adjustment** |
| 9 | | | | | |
| 10 | Operations | | | | |
| 11 | Production | 27,748,735 | (25,181,472) | 679,264 | - |
| 12 | Transmission | 4,076,081 | 25,756 | 159,552 | - |
| 13 | Energy Storage | - | - | - | - |
| 14 | Distribution | 14,037,881 | (217) | 2,190,202 | - |
| 15 | Customer Accounts | 12,071,859 | - | (226,230) | - |
| 16 | Customer Service & Inform. | 1,160,893 | - | (201,799) | - |
| 17 | Sales | 4,215,197 | - | 345,491 | - |
| 18 | Administrative & General | 29,063,060 | (43,832,044) | (144,460) | (5,016) |
| 19 | Total Operations | 92,373,705 | (68,987,977) | 2,802,020 | (5,016) |
| 20 | | | | | |
| 21 | Maintenance | | | | |
| 22 | Production | 17,540,595 | (8,524,509) | (81,956) | - |
| 23 | Transmission | 3,495,969 | (11,037) | 295,636 | - |
| 24 | Energy Storage | 13,025 | - | (1,117) | - |
| 25 | Distribution | 4,729,878 | - | 301,782 | - |
| 26 | Administrative & General | 874,532 | (1,384) | 68,403 | - |
| 27 | Total Maintenance | 26,653,999 | (8,536,930) | 582,747 | - |
| 28 | | | | | |
| 29 | Summary of Operations and Maintenance | | | | |
| 30 | Production | 45,289,330 | (33,705,981) | 597,308 | - |
| 31 | Transmission | 7,572,051 | 14,718 | 455,188 | - |
| 32 | Energy Storage | 13,025 | - | (1,117) | - |
| 33 | Distribution | 18,767,759 | (217) | 2,491,985 | - |
| 34 | Customer Accounts | 12,071,859 | - | (226,230) | - |
| 35 | Customer Service & Inform. | 1,160,893 | - | (201,799) | - |
| 36 | Sales | 4,215,197 | - | 345,491 | - |
| 37 | Administrative & General | 29,937,591 | (43,833,428) | (76,057) | (5,016) |
| 38 | Total Operations and Maintenance | 119,027,704 | (77,524,907) | 3,384,767 | (5,016) |
| 39 | | | | | |
| 40 | Payroll Taxes | 4,247,392 | 3,167,730 | - | - |

| | A | F | G | H | I | J | K |
|---|---|---|---|---|---|---|---|
| 1 | **Public Service Company of New Mexico** | | | | | | |
| 2 | **Schedule H-4** | | | | | | |
| 3 | **Payroll Distribution and Associated Payroll Taxes** | | | | | | |
| 4 | **Base Period Ending 6/30/2026** | | | | | | |
| 5 | **Test Period Ending 9/30/2028** | | | | | | |
| 6 | **This schedule is sponsored by PNM Witness Gutierrez** | | | | | | |
| 7 | | | | | | | |
| 8 | **Classification** | **Adjusted Base Period** | **Linkage 1 Jul-26 - Jun-27** | **Linkage 2 Oct-26 - Sep-27** | **Test Period Oct-27 - Sep-28** | **Adjusted Base and Test Periods Variance** | **Reference (See Notes Below)** |
| 9 | | | | | | | |
| 10 | Operations | | | | | | |
| 11 | Production | 3,246,527 | 7,205,097 | 7,279,288 | 7,582,036 | 4,335,510 | |
| 12 | Transmission | 4,261,389 | 4,300,625 | 4,344,915 | 4,963,968 | 702,579 | |
| 13 | Energy Storage | - | - | - | - | - | |
| 14 | Distribution | 16,227,866 | 16,370,504 | 16,561,042 | 20,031,951 | 3,804,085 | |
| 15 | Customer Accounts | 11,845,628 | 11,964,084 | 12,082,541 | 13,097,853 | 1,252,224 | |
| 16 | Customer Service & Inform. | 959,093 | 968,684 | 978,275 | 1,017,406 | 58,313 | |
| 17 | Sales | 4,560,688 | 4,606,295 | 4,651,901 | 4,837,978 | 277,290 | |
| 18 | Administrative & General | (14,918,459) | (15,067,650) | (15,216,825) | (15,825,460) | (907,000) | |
| 19 | Total Operations | 26,182,732 | 30,347,638 | 30,681,137 | 35,705,732 | 9,523,000 | |
| 20 | | | | | | | |
| 21 | Maintenance | | | | | | |
| 22 | Production | 8,934,130 | 4,943,189 | 5,003,613 | 5,250,333 | (3,683,797) | |
| 23 | Transmission | 3,780,568 | 3,812,840 | 3,858,946 | 4,047,199 | 266,631 | |
| 24 | Energy Storage | 11,907 | 12,026 | 12,145 | 12,631 | 724 | |
| 25 | Distribution | 5,031,661 | 5,074,587 | 5,135,678 | 5,385,109 | 353,448 | |
| 26 | Administrative & General | 941,551 | 949,708 | 961,011 | 1,007,158 | 65,607 | |
| 27 | Total Maintenance | 18,699,816 | 14,792,350 | 14,971,394 | 15,702,430 | (2,997,386) | |
| 28 | | | | | | | |
| 29 | Summary of Operations and Maintenance | | | | | | |
| 30 | Production | 12,180,657 | 12,148,286 | 12,282,901 | 12,832,369 | 651,712 | |
| 31 | Transmission | 8,041,957 | 8,113,464 | 8,203,861 | 9,011,167 | 969,210 | |
| 32 | Energy Storage | 11,907 | 12,026 | 12,145 | 12,631 | 724 | |
| 33 | Distribution | 21,259,527 | 21,445,091 | 21,696,720 | 25,417,060 | 4,157,533 | |
| 34 | Customer Accounts | 11,845,628 | 11,964,084 | 12,082,541 | 13,097,853 | 1,252,224 | |
| 35 | Customer Service & Inform. | 959,093 | 968,684 | 978,275 | 1,017,406 | 58,313 | |
| 36 | Sales | 4,560,688 | 4,606,295 | 4,651,901 | 4,837,978 | 277,290 | |
| 37 | Administrative & General | (13,976,909) | (14,117,943) | (14,255,815) | (14,818,302) | (841,393) | |
| 38 | Total Operations and Maintenance | 44,882,549 | 45,139,989 | 45,652,531 | 51,408,162 | 6,525,614 | |
| 39 | | | | | | | |
| 40 | Payroll Taxes | 7,415,122 | 7,880,981 | 8,042,857 | 9,084,000 | 1,668,878 | Schedule H-8, Line 28 |

| | A |
|---|---|
| 1 | **Public Service Company of New Mexico** |
| 2 | **Schedule H-4** |
| 3 | **Payroll Distribution and Associated Payroll Taxes (Notes)** |
| 4 | **Base Period Ending 6/30/2026** |
| 5 | **Test Period Ending 9/30/2028** |
| 6 | **This schedule is sponsored by PNM Witness Gutierrez** |
| 7 | |
| 8 | Requires data from schedules/files (sheets): H-08 Base and Test.xlsx |
| 9 | Base period data is historical information from the Company's Book Balance Amounts. |
| 10 | (1) Reflects reconciliation items that are not included in PNM Exhibit RNG-4 WP LA (Labor work papers). Please |
| 11 | see Rule 530 Schedule H-4.1 for more information. |
| 12 | |
| 13 | Column E - Please refer to PNM Exhibit RNG-4, WP LA - 1, Column E |
| 14 | Column F - Please refer to PNM Exhibit RNG-4, WP LA - 1, Column H |
| 15 | Column G - Please refer to PNM Exhibit RNG-4, WP LA - 1, Column I |
| 16 | Column H - Please refer to PNM Exhibit RNG-4, WP LA - 1, Column J |

| | A | B | C | D | E |
|---|---|---|---|---|---|
| 1 | **Public Service Company of New Mexico** | | | | |
| 2 | **Schedule H-4.1** | | | | |
| 3 | **Reconciliation of base period labor to PNM Exhibit RNG-4 WP LA** | | | | |
| 4 | **Base Period Ending 6/30/2026** | | | | |
| 5 | **Test Period Ending 9/30/2028** | | | | |
| 6 | **This schedule is sponsored by PNM Witness Gutierrez** | | | | |
| 7 | | | | | |
| 8 | | | | | |
| 9 | **Description** | **Unadjusted Base Period** | **Labor Billed by others** | **E&S and Stores Labor Allocation** | **Payroll Loads** |
| 10 | Operations | | | | |
| 11 | Production | 27,748,735 | 25,059,740 | (184,361) | |
| 12 | Transmission | 4,076,081 | 25,897 | (55,747) | |
| 13 | Energy Storage | - | | | |
| 14 | Distribution | 14,037,881 | | | 217 |
| 15 | Customer Accounts | 12,071,859 | | | |
| 16 | Customer Service & Inform. | 1,160,893 | | | |
| 17 | Sales | 4,215,197 | | | |
| 18 | Administrative & General | 29,063,060 | | (222,088) | 0 |
| 19 | Total Operations | 92,373,705 | 25,085,637 | (462,196) | 217 |
| 20 | | | | | |
| 21 | Maintenance | | | | |
| 22 | Production | 17,540,595 | 8,729,823 | (205,314) | |
| 23 | Transmission | 3,495,969 | 11,037 | | |
| 24 | Energy Storage | 13,025 | | | |
| 25 | Distribution | 4,729,878 | | | |
| 26 | Administrative & General | 874,532 | | | |
| 27 | Total Maintenance | 26,653,999 | 8,740,860 | (205,314) | - |
| 28 | | | | | |
| 29 | Summary of Operations and Maintenance | | | | |
| 30 | Production | 45,289,330 | 33,789,563 | (389,675) | - |
| 31 | Transmission | 7,572,051 | 36,934 | (55,747) | - |
| 32 | Energy Storage | 13,025 | - | - | - |
| 33 | Distribution | 18,767,759 | - | - | 217 |
| 34 | Customer Accounts | 12,071,859 | - | - | - |
| 35 | Customer Service & Inform. | 1,160,893 | - | - | - |
| 36 | Sales | 4,215,197 | - | - | - |
| 37 | Administrative & General | 29,937,591 | - | (222,088) | 0 |
| 38 | Total Operations and Maintenance | 119,027,704 | 33,826,497 | (667,510) | 217 |

| | A | F | G | H | I | J | K |
|---|---|---|---|---|---|---|---|
| 1 | **Public Service Company of New Mexico** | | | | | | |
| 2 | **Schedule H-4.1** | | | | | | |
| 3 | **Reconciliation of base period labor to PNM Exhibit RNG-4 WP LA** | | | | | | |
| 4 | **Base Period Ending 6/30/2026** | | | | | | |
| 5 | **Test Period Ending 9/30/2028** | | | | | | |
| 6 | **This schedule is sponsored by PNM Witness Gutierrez** | | | | | | |
| 7 | | | | | | | |
| 8 | | | | | **PNM Exhibit WP LA - Labor Workpaper; WP LA-1, Col C** | **PNM Exhibit WP LA - Labor Workpaper; WP LA-1 Col D** | **PNM Exhibit WP LA - Labor Workpaper; WP LA-1 Col E** |
| 9 | **Description** | **Removal of SJGS Labor** | **Shared Services Labor (1)** | **Subtotal (Sum of Columns C - G)** | **RNG-4 WP LA Labor (Column B - Column H)** | **Normalized Labor Adjustment** | **Overtime Labor Adjustment** |
| 10 | Operations | | | | | | |
| 11 | Production | 306,093 | | 25,181,472 | 2,567,263 | 679,264 | |
| 12 | Transmission | 4,094 | | (25,756) | 4,101,837 | 159,552 | |
| 13 | Energy Storage | | | - | - | - | |
| 14 | Distribution | | | 217 | 14,037,664 | 2,190,202 | |
| 15 | Customer Accounts | | | - | 12,071,859 | (226,230) | |
| 16 | Customer Service & Inform. | | | - | 1,160,893 | (201,799) | |
| 17 | Sales | | | - | 4,215,197 | 345,491 | |
| 18 | Administrative & General | 152,072 | 43,902,060 | 43,832,044 | (14,768,984) | (144,460) | (5,016) |
| 19 | Total Operations | 462,259 | 43,902,060 | 68,987,977 | 23,385,728 | 2,802,020 | (5,016) |
| 20 | | | | | | | |
| 21 | Maintenance | | | | | | |
| 22 | Production | | | 8,524,509 | 9,016,086 | (81,956) | |
| 23 | Transmission | | | 11,037 | 3,484,932 | 295,636 | |
| 24 | Energy Storage | | | - | 13,025 | (1,117) | |
| 25 | Distribution | | | - | 4,729,878 | 301,782 | |
| 26 | Administrative & General | | 1,384 | 1,384 | 873,148 | 68,403 | |
| 27 | Total Maintenance | - | 1,384 | 8,536,930 | 18,117,069 | 582,747 | - |
| 28 | | | | | | | |
| 29 | Summary of Operations and Maintenance | | | | | | |
| 30 | Production | 306,093 | - | 33,705,981 | 11,583,349 | 597,308 | - |
| 31 | Transmission | 4,094 | - | (14,718) | 7,586,769 | 455,188 | - |
| 32 | Energy Storage | - | - | - | 13,025 | (1,117) | - |
| 33 | Distribution | - | - | 217 | 18,767,542 | 2,491,985 | - |
| 34 | Customer Accounts | - | - | - | 12,071,859 | (226,230) | - |
| 35 | Customer Service & Inform. | - | - | - | 1,160,893 | (201,799) | - |
| 36 | Sales | - | - | - | 4,215,197 | 345,491 | - |
| 37 | Administrative & General | 152,072 | 43,903,443 | 43,833,428 | (13,895,836) | (76,057) | (5,016) |
| 38 | Total Operations and Maintenance | 462,259 | 43,903,443 | 77,524,907 | 41,502,797 | 3,384,767 | (5,016) |

| | A | L | M | N | O | P |
|---|---|---|---|---|---|---|
| 1 | **Public Service Company of New Mexico** | | | | | |
| 2 | **Schedule H-4.1** | | | | | |
| 3 | **Reconciliation of base period labor to PNM Exhibit RNG-4 WP LA** | | | | | |
| 4 | **Base Period Ending 6/30/2026** | | | | | |
| 5 | **Test Period Ending 9/30/2028** | | | | | |
| 6 | **This schedule is sponsored by PNM Witness Gutierrez** | | | | | |
| 7 | | | | | | |
| 8 | | | **PNM Exhibit WP LA - Labor Workpaper; WP LA-1 Col I** | **PNM Exhibit WP LA - Labor Workpaper; WP LA-1 Col J** | **PNM Exhibit WP LA - Labor Workpaper; WP LA-1, Col K** | |
| 9 | **Description** | **Adjusted Base Period Column I + Column J** | **Linkage 1 Jul-26 - Jun-27** | **Linkage 2 Oct-26 - Sep-27** | **Test Period Oct-27 - Sep-28** | **Reference** |
| 10 | Operations | | | | | |
| 11 | Production | 3,246,527 | 7,205,097 | 7,279,288 | 7,582,036 | |
| 12 | Transmission | 4,261,389 | 4,300,625 | 4,344,915 | 4,963,968 | |
| 13 | Energy Storage | - | - | - | - | |
| 14 | Distribution | 16,227,866 | 16,370,504 | 16,561,042 | 20,031,951 | |
| 15 | Customer Accounts | 11,845,628 | 11,964,084 | 12,082,541 | 13,097,853 | |
| 16 | Customer Service & Inform. | 959,093 | 968,684 | 978,275 | 1,017,406 | |
| 17 | Sales | 4,560,688 | 4,606,295 | 4,651,901 | 4,837,978 | |
| 18 | Administrative & General | (14,918,459) | (15,067,650) | (15,216,825) | (15,825,460) | |
| 19 | Total Operations | 26,182,732 | 30,347,638 | 30,681,137 | 35,705,732 | |
| 20 | | | | | | |
| 21 | Maintenance | | | | | |
| 22 | Production | 8,934,130 | 4,943,189 | 5,003,613 | 5,250,333 | |
| 23 | Transmission | 3,780,568 | 3,812,840 | 3,858,946 | 4,047,199 | |
| 24 | Energy Storage | 11,907 | 12,026 | 12,145 | 12,631 | |
| 25 | Distribution | 5,031,661 | 5,074,587 | 5,135,678 | 5,385,109 | |
| 26 | Administrative & General | 941,551 | 949,708 | 961,011 | 1,007,158 | |
| 27 | Total Maintenance | 18,699,816 | 14,792,350 | 14,971,394 | 15,702,430 | |
| 28 | | | | | | |
| 29 | Summary of Operations and Maintenance | | | | | |
| 30 | Production | 12,180,657 | 12,148,286 | 12,282,901 | 12,832,369 | |
| 31 | Transmission | 8,041,957 | 8,113,464 | 8,203,861 | 9,011,167 | |
| 32 | Energy Storage | 11,907 | 12,026 | 12,145 | 12,631 | |
| 33 | Distribution | 21,259,527 | 21,445,091 | 21,696,720 | 25,417,060 | |
| 34 | Customer Accounts | 11,845,628 | 11,964,084 | 12,082,541 | 13,097,853 | |
| 35 | Customer Service & Inform. | 959,093 | 968,684 | 978,275 | 1,017,406 | |
| 36 | Sales | 4,560,688 | 4,606,295 | 4,651,901 | 4,837,978 | |
| 37 | Administrative & General | (13,976,909) | (14,117,943) | (14,255,815) | (14,818,302) | |
| 38 | Total Operations and Maintenance | 44,882,549 | 45,139,989 | 45,652,531 | 51,408,162 | |

| | A |
|---|---|
| 1 | **Public Service Company of New Mexico** |
| 2 | **Schedule H-4.1** |
| 3 | **Reconciliation of base period labor to PNM Exhibit RNG-4 WP LA (Notes)** |
| 4 | **Base Period Ending 6/30/2026** |
| 5 | **Test Period Ending 9/30/2028** |
| 6 | **This schedule is sponsored by PNM Witness Gutierrez** |
| 7 | |
| 8 | The purpose of this schedule is to provide a reconciliation of base period labor as reported in Schedule H-4 |
| 9 | and agrees to FERC reporting to PNM Exhibit RNG-4 WP LA (Labor workpaper). |
| 10 | Base period data is historical information from the Company's Book Balance Amounts. |
| 11 | (1) Shared Service labor reflects labor costs recorded on Services Company and allocated to PNM. |

# PNM Schedule H-5

Expenses associated with advertising, contributions, donations, lobbying and political activities, memberships, and outside services

| | A | B | C | D | E | F |
|---|---|---|---|---|---|---|
| 1 | **Public Service Company of New Mexico** | | | | | |
| 2 | **Schedule H-5** | | | | | |
| 3 | **Expenses Associated with Advertising, Contributions,** | | | | | |
| 4 | **Donations, Lobbying and political activities, memberships, and outside services** | | | | | |
| 5 | **Base Period Ending 6/30/2026** | | | | | |
| 6 | **Test Period Ending 9/30/2028** | | | | | |
| 7 | **This schedule is sponsored by PNM Witness Gutierrez** | | | | | |
| 8 | | | | | | |
| 9 | **Description** | **FERC** | **Cost Type** | **Jul-25** | **Aug-25** | **Sep-25** |
| 10 | | | | | | |
| 11 | Advertising | | | | | |
| 12 | Operation Supervision & Engin | 500 | 370, 530 | - | - | - |
| 15 | Misc Steam Power Exp | 506 | 370, 530 | - | - | - |
| 17 | Maintenance Supervision & Engin | 510 | 370, 530 | - | - | - |
| 20 | Maintenance of Misc Electric Plant | 514 | 370, 530 | - | - | - |
| 23 | System Control & Load Dispatching | 556 | 370, 530 | - | - | - |
| 25 | Operation Supervision & Engin | 560 | 370, 530 | - | - | - |
| 28 | Main of Station Equipment | 570 | 370, 530 | - | - | - |
| 31 | Operation Supervision & Engin | 580 | 370, 530 | - | - | - |
| 34 | Misc Expenses | 588 | 370, 530 | - | - | - |
| 37 | Main of Overhead Line | 593 | 370, 530 | - | - | - |
| 39 | Main of Underground Lines | 594 | 370, 530 | - | - | - |
| 41 | Customer Records & Collection Exp | 902 | 370, 530 | 35,411 | 6,484 | 18,886 |
| 44 | Customer Assistance Expenses | 908 | 370, 555 | - | - | - |
| 47 | Demonstrating & Selling Exp | 912 | 370, 530 | - | - | - |
| 49 | A&G Office Supplies | 921 | 370, 530 | - | - | - |
| 53 | Shared Services (2) | 922 | 370, 550, 555 | 38,563 | 22,431 | 20,431 |
| 58 | Outside Services | 923 | 370, 555 | - | - | - |
| 60 | Main of General Plant | 935 | 370, 555 | | | |
| 61 | | | 370 - Outside Services | | | |
| 62 | Total Advertising Before 426.1 | | | 73,973 | 28,915 | 39,317 |
| 63 | | | | | | |
| 64 | Advertising in OID | 426.1 | 622-Contibutions and Donations | - | - | - |
| 66 | | | | | | |
| 67 | Total Advertising Including 426.1 | | | 73,973 | 28,915 | 39,317 |

| | A | B | C | D | E | F |
|---|---|---|---|---|---|---|
| 1 | **Public Service Company of New Mexico** | | | | | |
| 2 | **Schedule H-5** | | | | | |
| 3 | **Expenses Associated with Advertising, Contributions,** | | | | | |
| 4 | **Donations, Lobbying and political activities, memberships, and outside services** | | | | | |
| 5 | **Base Period Ending 6/30/2026** | | | | | |
| 6 | **Test Period Ending 9/30/2028** | | | | | |
| 7 | **This schedule is sponsored by PNM Witness Gutierrez** | | | | | |
| 8 | | | | | | |
| 9 | **Description** | **FERC** | **Cost Type** | **Jul-25** | **Aug-25** | **Sep-25** |
| 68 | | | | | | |
| 69 | Contributions and Donations | 426.1 | Various | 102,707 | 71,291 | 71,966 |
| 72 | | | | | | |
| 73 | Lobbying and Political Activities | 426.4 | Various | 34,458 | 33,558 | 280,846 |
| 76 | | | | | | |
| 77 | Memberships | Various | 530, 560 | 66,587 | 214,604 | 136,733 |
| 80 | | | | | | |
| 81 | Outside Services (1) | Various | 370, 374, 376,377 | | | |
| 82 | | 500 | 370, 374, 377 | 17,345 | (88,465) | 320,679 |
| 86 | | 501 | 370, 374, 376,377 | - | - | - |
| 89 | | 502 | 370, 374, 376,377 | - | - | - |
| 91 | | 505 | 370, 374, 376,377 | - | - | - |
| 95 | | 506 | 370, 374, 376,377 | 130,940 | 41,704 | 163,549 |
| 100 | | 510 | 370, 374, 376,377 | 70,000 | (10,525) | (11,000) |
| 103 | | 511 | 370, 374, 376,377 | 6,641 | 82,778 | 8,951 |
| 106 | | 512 | 370, 374, 376,377 | 67,512 | 96,278 | 79,219 |
| 109 | | 513 | 370, 374, 376,377 | 430,499 | (349,600) | 83,393 |
| 112 | | 514 | 370, 374, 376,377 | - | - | - |
| 114 | | 517 | 370, 374, 376,377 | 8,731 | 5,000 | 7,625 |
| 116 | | 525 | 370, 374, 376,377 | - | - | - |
| 118 | | 546 | 370, 374, 376,377 | 1,000,525 | 973,001 | 981,523 |
| 121 | | 549 | 370, 374, 376,377 | - | - | - |
| 123 | | 552 | 370, 374, 376,377 | 12,783 | 32,096 | 23,077 |
| 125 | | 553 | 370, 374, 376,377 | 139,461 | 155,954 | 321,503 |
| 129 | | 555 | 370, 374, 376,377 | - | - | - |
| 131 | | 556 | 370, 374, 376,377 | 60,038 | 64,372 | 87,264 |
| 134 | | 558 | 370, 374, 376,377 | - | - | 715,316 |
| 136 | | 560 | 370, 374, 376,377 | 38,529 | 64,839 | 78,752 |

| | A | B | C | D | E | F |
|---|---|---|---|---|---|---|
| 1 | **Public Service Company of New Mexico** | | | | | |
| 2 | **Schedule H-5** | | | | | |
| 3 | **Expenses Associated with Advertising, Contributions,** | | | | | |
| 4 | **Donations, Lobbying and political activities, memberships, and outside services** | | | | | |
| 5 | **Base Period Ending 6/30/2026** | | | | | |
| 6 | **Test Period Ending 9/30/2028** | | | | | |
| 7 | **This schedule is sponsored by PNM Witness Gutierrez** | | | | | |
| 8 | | | | | | |
| 9 | **Description** | **FERC** | **Cost Type** | **Jul-25** | **Aug-25** | **Sep-25** |
| 140 | | 562 | 370, 374, 376,377 | 21,052 | 113,034 | (50,486) |
| 143 | | 563 | 370, 374, 376,377 | - | - | - |
| 145 | | 566 | 370, 374, 376,377 | 75,421 | 166,896 | 72,339 |
| 149 | | 567 | 370, 374, 376,377 | - | - | - |
| 153 | | 569 | 370, 374, 376,377 | - | - | - |
| 155 | | 570 | 370, 374, 376,377 | 593 | 1,517 | - |
| 157 | | 571 | 370, 374, 376,377 | 25,258 | 40,216 | 86,847 |
| 160 | | 573 | 370, 374, 376,377 | - | - | - |
| 162 | | 578 | 370, 374, 376,377 | - | 10,332 | - |
| 164 | | 580 | 370, 374, 376,377 | 37,829 | (4,380) | 56,565 |
| 167 | | 582 | 370, 374, 376,377 | 16,044 | 13,700 | 3,321 |
| 169 | | 583 | 370, 374, 376,377 | - | - | - |
| 171 | | 584 | 370, 374, 376,377 | - | - | 660 |
| 173 | | 585 | 370, 374, 376,377 | - | - | - |
| 175 | | 586 | 370, 374, 376,377 | 34,839 | 7,140 | - |
| 177 | | 588 | 370, 374, 376,377 | 118,841 | 247,771 | 143,377 |
| 182 | | 590 | 370, 374, 376,377 | - | (1,848) | - |
| 186 | | 591 | 370, 374, 376,377 | 2,155 | 3,086 | 3,096 |
| 188 | | 592 | 370, 374, 376,377 | 14,688 | 14,954 | 14,637 |
| 190 | | 593 | 370, 374, 376,377 | 1,033,446 | 746,108 | 637,844 |
| 194 | | 594 | 370, 374, 376,377 | 67,586 | 6,005 | 202,333 |
| 197 | | 596 | 370, 374, 376,377 | 42,423 | 91,113 | (7,315) |
| 200 | | 597 | 370, 374, 376,377 | - | - | 434 |

| | A | B | C | D | E | F |
|---|---|---|---|---|---|---|
| 1 | **Public Service Company of New Mexico** | | | | | |
| 2 | **Schedule H-5** | | | | | |
| 3 | **Expenses Associated with Advertising, Contributions,** | | | | | |
| 4 | **Donations, Lobbying and political activities, memberships, and outside services** | | | | | |
| 5 | **Base Period Ending 6/30/2026** | | | | | |
| 6 | **Test Period Ending 9/30/2028** | | | | | |
| 7 | **This schedule is sponsored by PNM Witness Gutierrez** | | | | | |
| 8 | | | | | | |
| 9 | **Description** | **FERC** | **Cost Type** | **Jul-25** | **Aug-25** | **Sep-25** |
| 202 | | 901 | 370, 374, 376,377 | - | - | - |
| 205 | | 902 | 370, 374, 376,377 | 107,473 | 75,897 | 110,691 |
| 208 | | 903 | 370, 374, 376,377 | 249,295 | 352,102 | 168,463 |
| 211 | | 904 | 370, 374, 376,377 | 11,153 | 13,597 | 11,805 |
| 213 | | 906 | 370, 374, 376,377 | - | - | - |
| 215 | | 908 | 370, 374, 376,377 | - | - | 2,000 |
| 218 | | 912 | 370, 374, 376,377 | 54,062 | 110,114 | 36,452 |
| 221 | | 922 | 370, 374, 376,377 | - | - | - |
| 225 | | 923 | 370, 374, 376,377 | 550,086 | 338,788 | 246,024 |
| 229 | | 924 | 370, 374, 376,377 | - | - | 1,381 |
| 231 | | 930 | 370, 374, 376,377 | - | - | 1,206 |
| 233 | | 935 | 370, 374, 376,377 | 69,730 | 27,663 | 108,760 |
| 236 | Total Outside Services | | | 4,514,977 | 3,441,236 | 4,710,283 |
| 237 | | | | | | |
| 238 | Total | | | 4,792,702 | 3,789,605 | 5,239,145 |

| | A | B | C | G | H | I |
|---|---|---|---|---|---|---|
| 1 | **Public Service Company of New Mexico** | | | | | |
| 2 | **Schedule H-5** | | | | | |
| 3 | **Expenses Associated with Advertising, Contributions,** | | | | | |
| 4 | **Donations, Lobbying and political activities, memberships, and outside services** | | | | | |
| 5 | **Base Period Ending 6/30/2026** | | | | | |
| 6 | **Test Period Ending 9/30/2028** | | | | | |
| 7 | **This schedule is sponsored by PNM Witness Gutierrez** | | | | | |
| 8 | | | | | | |
| 9 | **Description** | **FERC** | **Cost Type** | **Oct-25** | **Nov-25** | **Dec-25** |
| 10 | | | | | | |
| 11 | Advertising | | | | | |
| 12 | Operation Supervision & Engin | 500 | 370, 530 | - | - | - |
| 15 | Misc Steam Power Exp | 506 | 370, 530 | - | - | - |
| 17 | Maintenance Supervision & Engin | 510 | 370, 530 | - | - | - |
| 20 | Maintenance of Misc Electric Plant | 514 | 370, 530 | - | - | - |
| 23 | System Control & Load Dispatching | 556 | 370, 530 | - | - | - |
| 25 | Operation Supervision & Engin | 560 | 370, 530 | - | - | - |
| 28 | Main of Station Equipment | 570 | 370, 530 | - | - | - |
| 31 | Operation Supervision & Engin | 580 | 370, 530 | - | - | - |
| 34 | Misc Expenses | 588 | 370, 530 | - | - | - |
| 37 | Main of Overhead Line | 593 | 370, 530 | - | - | - |
| 39 | Main of Underground Lines | 594 | 370, 530 | - | - | - |
| 41 | Customer Records & Collection Exp | 902 | 370, 530 | 9,790 | 4,044 | 15,576 |
| 44 | Customer Assistance Expenses | 908 | 370, 555 | - | - | - |
| 47 | Demonstrating & Selling Exp | 912 | 370, 530 | - | - | - |
| 49 | A&G Office Supplies | 921 | 370, 530 | - | - | - |
| 53 | Shared Services (2) | 922 | 370, 550, 555 | 9,148 | 298,029 | 90,864 |
| 58 | Outside Services | 923 | 370, 555 | - | - | - |
| 60 | Main of General Plant | 935 | 370, 555 | | | |
| 61 | | | 370 - Outside Services | | | |
| 62 | Total Advertising Before 426.1 | | | 18,938 | 302,073 | 106,440 |
| 63 | | | | | | |
| 64 | Advertising in OID | 426.1 | 622-Contibutions and Donations | - | - | - |
| 66 | | | | | | |
| 67 | Total Advertising Including 426.1 | | | 18,938 | 302,073 | 106,440 |

| | A | B | C | G | H | I |
|---|---|---|---|---|---|---|
| 1 | **Public Service Company of New Mexico** | | | | | |
| 2 | **Schedule H-5** | | | | | |
| 3 | **Expenses Associated with Advertising, Contributions,** | | | | | |
| 4 | **Donations, Lobbying and political activities, memberships, and outside services** | | | | | |
| 5 | **Base Period Ending 6/30/2026** | | | | | |
| 6 | **Test Period Ending 9/30/2028** | | | | | |
| 7 | **This schedule is sponsored by PNM Witness Gutierrez** | | | | | |
| 8 | | | | | | |
| 9 | **Description** | **FERC** | **Cost Type** | **Oct-25** | **Nov-25** | **Dec-25** |
| 68 | | | | | | |
| 69 | Contributions and Donations | 426.1 | Various | 62,401 | 162,549 | 59,039 |
| 72 | | | | | | |
| 73 | Lobbying and Political Activities | 426.4 | Various | 43,761 | 14,058 | 55,034 |
| 76 | | | | | | |
| 77 | Memberships | Various | 530, 560 | 133,000 | 128,708 | 135,010 |
| 80 | | | | | | |
| 81 | Outside Services (1) | Various | 370, 374, 376,377 | | | |
| 82 | | 500 | 370, 374, 377 | (113,818) | 60,513 | 50,484 |
| 86 | | 501 | 370, 374, 376,377 | - | - | - |
| 89 | | 502 | 370, 374, 376,377 | - | - | - |
| 91 | | 505 | 370, 374, 376,377 | - | - | - |
| 95 | | 506 | 370, 374, 376,377 | 192,153 | 276,879 | 162,795 |
| 100 | | 510 | 370, 374, 376,377 | 10,000 | (10,000) | - |
| 103 | | 511 | 370, 374, 376,377 | 7,739 | 181,076 | 34,922 |
| 106 | | 512 | 370, 374, 376,377 | 133,855 | (24,923) | 25,806 |
| 109 | | 513 | 370, 374, 376,377 | 89,552 | 3,059 | 37,234 |
| 112 | | 514 | 370, 374, 376,377 | - | - | - |
| 114 | | 517 | 370, 374, 376,377 | - | 8,661 | 6,050 |
| 116 | | 525 | 370, 374, 376,377 | - | - | - |
| 118 | | 546 | 370, 374, 376,377 | 815,363 | 1,618,333 | 2,493,432 |
| 121 | | 549 | 370, 374, 376,377 | - | - | - |
| 123 | | 552 | 370, 374, 376,377 | 136,542 | 11,676 | 58,947 |
| 125 | | 553 | 370, 374, 376,377 | 580,053 | 118,194 | 366,292 |
| 129 | | 555 | 370, 374, 376,377 | - | - | - |
| 131 | | 556 | 370, 374, 376,377 | 104,500 | 56,783 | 64,115 |
| 134 | | 558 | 370, 374, 376,377 | 221,482 | - | 526,316 |
| 136 | | 560 | 370, 374, 376,377 | 148,865 | 54,059 | 73,228 |

| | A | B | C | G | H | I |
|---|---|---|---|---|---|---|
| 1 | **Public Service Company of New Mexico** | | | | | |
| 2 | **Schedule H-5** | | | | | |
| 3 | **Expenses Associated with Advertising, Contributions,** | | | | | |
| 4 | **Donations, Lobbying and political activities, memberships, and outside services** | | | | | |
| 5 | **Base Period Ending 6/30/2026** | | | | | |
| 6 | **Test Period Ending 9/30/2028** | | | | | |
| 7 | **This schedule is sponsored by PNM Witness Gutierrez** | | | | | |
| 8 | | | | | | |
| 9 | **Description** | **FERC** | **Cost Type** | **Oct-25** | **Nov-25** | **Dec-25** |
| 140 | | 562 | 370, 374, 376,377 | 3,755 | 12,562 | 57,324 |
| 143 | | 563 | 370, 374, 376,377 | - | - | - |
| 145 | | 566 | 370, 374, 376,377 | 282,457 | 98,743 | 327,651 |
| 149 | | 567 | 370, 374, 376,377 | - | - | 126,501 |
| 153 | | 569 | 370, 374, 376,377 | - | - | 26,014 |
| 155 | | 570 | 370, 374, 376,377 | 919 | (82) | 9,497 |
| 157 | | 571 | 370, 374, 376,377 | 159,558 | 48,977 | 86,978 |
| 160 | | 573 | 370, 374, 376,377 | - | - | - |
| 162 | | 578 | 370, 374, 376,377 | - | - | 51,660 |
| 164 | | 580 | 370, 374, 376,377 | 53,612 | 269,730 | 96,814 |
| 167 | | 582 | 370, 374, 376,377 | 7,336 | 4,031 | 18,097 |
| 169 | | 583 | 370, 374, 376,377 | - | 1,794 | 29,551 |
| 171 | | 584 | 370, 374, 376,377 | 718 | - | 1,794 |
| 173 | | 585 | 370, 374, 376,377 | - | - | - |
| 175 | | 586 | 370, 374, 376,377 | 7,879 | - | - |
| 177 | | 588 | 370, 374, 376,377 | 225,166 | 246,649 | (35,235) |
| 182 | | 590 | 370, 374, 376,377 | 2,593 | - | - |
| 186 | | 591 | 370, 374, 376,377 | 1,692 | 2,823 | 1,468 |
| 188 | | 592 | 370, 374, 376,377 | 197 | 29,674 | (30,322) |
| 190 | | 593 | 370, 374, 376,377 | 784,866 | 161,892 | 626,411 |
| 194 | | 594 | 370, 374, 376,377 | 78,037 | 47,580 | 74,014 |
| 197 | | 596 | 370, 374, 376,377 | 58,191 | 57,585 | 21,112 |
| 200 | | 597 | 370, 374, 376,377 | - | - | - |

| | A | B | C | G | H | I |
|---|---|---|---|---|---|---|
| 1 | **Public Service Company of New Mexico** | | | | | |
| 2 | **Schedule H-5** | | | | | |
| 3 | **Expenses Associated with Advertising, Contributions,** | | | | | |
| 4 | **Donations, Lobbying and political activities, memberships, and outside services** | | | | | |
| 5 | **Base Period Ending 6/30/2026** | | | | | |
| 6 | **Test Period Ending 9/30/2028** | | | | | |
| 7 | **This schedule is sponsored by PNM Witness Gutierrez** | | | | | |
| 8 | | | | | | |
| 9 | **Description** | **FERC** | **Cost Type** | **Oct-25** | **Nov-25** | **Dec-25** |
| 202 | | 901 | 370, 374, 376,377 | - | - | - |
| 205 | | 902 | 370, 374, 376,377 | 107,470 | 102,486 | 140,866 |
| 208 | | 903 | 370, 374, 376,377 | 180,511 | 158,492 | 273,175 |
| 211 | | 904 | 370, 374, 376,377 | 12,623 | - | 35,491 |
| 213 | | 906 | 370, 374, 376,377 | - | - | - |
| 215 | | 908 | 370, 374, 376,377 | (2,000) | 40 | - |
| 218 | | 912 | 370, 374, 376,377 | (40,036) | 18,953 | (66,434) |
| 221 | | 922 | 370, 374, 376,377 | - | - | - |
| 225 | | 923 | 370, 374, 376,377 | 859,192 | (156,422) | 307,208 |
| 229 | | 924 | 370, 374, 376,377 | (1,381) | - | - |
| 231 | | 930 | 370, 374, 376,377 | (1,000) | - | (206) |
| 233 | | 935 | 370, 374, 376,377 | 81,977 | 167,669 | 8,942 |
| 236 | Total Outside Services | | | 5,190,618 | 3,627,486 | 6,087,991 |
| 237 | | | | | | |
| 238 | Total | | | 5,448,718 | 4,234,873 | 6,443,513 |

| | A | B | C | J | K | L |
|---|---|---|---|---|---|---|
| 1 | **Public Service Company of New Mexico** | | | | | |
| 2 | **Schedule H-5** | | | | | |
| 3 | **Expenses Associated with Advertising, Contributions,** | | | | | |
| 4 | **Donations, Lobbying and political activities, memberships, and outside services** | | | | | |
| 5 | **Base Period Ending 6/30/2026** | | | | | |
| 6 | **Test Period Ending 9/30/2028** | | | | | |
| 7 | **This schedule is sponsored by PNM Witness Gutierrez** | | | | | |
| 8 | | | | | | |
| 9 | **Description** | **FERC** | **Cost Type** | **Jan-26** | **Feb-26** | **Mar-26** |
| 10 | | | | | | |
| 11 | Advertising | | | | | |
| 12 | Operation Supervision & Engin | 500 | 370, 530 | - | - | - |
| 15 | Misc Steam Power Exp | 506 | 370, 530 | - | - | - |
| 17 | Maintenance Supervision & Engin | 510 | 370, 530 | - | - | - |
| 20 | Maintenance of Misc Electric Plant | 514 | 370, 530 | - | - | - |
| 23 | System Control & Load Dispatching | 556 | 370, 530 | - | - | - |
| 25 | Operation Supervision & Engin | 560 | 370, 530 | - | - | - |
| 28 | Main of Station Equipment | 570 | 370, 530 | - | - | - |
| 31 | Operation Supervision & Engin | 580 | 370, 530 | - | - | - |
| 34 | Misc Expenses | 588 | 370, 530 | - | - | - |
| 37 | Main of Overhead Line | 593 | 370, 530 | - | - | - |
| 39 | Main of Underground Lines | 594 | 370, 530 | - | - | - |
| 41 | Customer Records & Collection Exp | 902 | 370, 530 | 6,028 | - | - |
| 44 | Customer Assistance Expenses | 908 | 370, 555 | - | - | - |
| 47 | Demonstrating & Selling Exp | 912 | 370, 530 | - | - | - |
| 49 | A&G Office Supplies | 921 | 370, 530 | - | - | - |
| 53 | Shared Services (2) | 922 | 370, 550, 555 | 243,344 | 28,849 | 19,607 |
| 58 | Outside Services | 923 | 370, 555 | - | - | - |
| 60 | Main of General Plant | 935 | 370, 555 | | | |
| 61 | | | 370 - Outside Services | | | |
| 62 | Total Advertising Before 426.1 | | | 249,372 | 28,849 | 19,607 |
| 63 | | | | | | |
| 64 | Advertising in OID | 426.1 | 622-Contibutions and Donations | - | - | - |
| 66 | | | | | | |
| 67 | Total Advertising Including 426.1 | | | 249,372 | 28,849 | 19,607 |

| | A | B | C | J | K | L |
|---|---|---|---|---|---|---|
| 1 | **Public Service Company of New Mexico** | | | | | |
| 2 | **Schedule H-5** | | | | | |
| 3 | **Expenses Associated with Advertising, Contributions,** | | | | | |
| 4 | **Donations, Lobbying and political activities, memberships, and outside services** | | | | | |
| 5 | **Base Period Ending 6/30/2026** | | | | | |
| 6 | **Test Period Ending 9/30/2028** | | | | | |
| 7 | **This schedule is sponsored by PNM Witness Gutierrez** | | | | | |
| 8 | | | | | | |
| 9 | **Description** | **FERC** | **Cost Type** | **Jan-26** | **Feb-26** | **Mar-26** |
| 68 | | | | | | |
| 69 | Contributions and Donations | 426.1 | Various | 60,203 | 32,041 | 112,853 |
| 72 | | | | | | |
| 73 | Lobbying and Political Activities | 426.4 | Various | 18,890 | 161,172 | 121,858 |
| 76 | | | | | | |
| 77 | Memberships | Various | 530, 560 | 131,274 | 133,174 | 188,918 |
| 80 | | | | | | |
| 81 | Outside Services (1) | Various | 370, 374, 376,377 | | | |
| 82 | | 500 | 370, 374, 377 | 3,000 | 19,537 | 12,098 |
| 86 | | 501 | 370, 374, 376,377 | - | - | - |
| 89 | | 502 | 370, 374, 376,377 | - | - | - |
| 91 | | 505 | 370, 374, 376,377 | - | - | - |
| 95 | | 506 | 370, 374, 376,377 | 17,523 | 125,007 | 182,461 |
| 100 | | 510 | 370, 374, 376,377 | 5,000 | 59,100 | 35,900 |
| 103 | | 511 | 370, 374, 376,377 | 48,607 | 23,023 | 15,729 |
| 106 | | 512 | 370, 374, 376,377 | 34,757 | 16,626 | 17,686 |
| 109 | | 513 | 370, 374, 376,377 | (33,475) | (785) | 23,769 |
| 112 | | 514 | 370, 374, 376,377 | - | - | - |
| 114 | | 517 | 370, 374, 376,377 | 923 | 11,602 | - |
| 116 | | 525 | 370, 374, 376,377 | - | - | - |
| 118 | | 546 | 370, 374, 376,377 | 743,165 | 1,110,953 | 2,541,775 |
| 121 | | 549 | 370, 374, 376,377 | 302 | - | - |
| 123 | | 552 | 370, 374, 376,377 | 8,686 | 93,400 | 172,691 |
| 125 | | 553 | 370, 374, 376,377 | 176,167 | 625,749 | 341,624 |
| 129 | | 555 | 370, 374, 376,377 | - | - | - |
| 131 | | 556 | 370, 374, 376,377 | 364,229 | 51,412 | 50,085 |
| 134 | | 558 | 370, 374, 376,377 | 180,488 | 56,710 | 513,469 |
| 136 | | 560 | 370, 374, 376,377 | 59,478 | 99,801 | 122,448 |

| | A | B | C | J | K | L |
|---|---|---|---|---|---|---|
| 1 | **Public Service Company of New Mexico** | | | | | |
| 2 | **Schedule H-5** | | | | | |
| 3 | **Expenses Associated with Advertising, Contributions,** | | | | | |
| 4 | **Donations, Lobbying and political activities, memberships, and outside services** | | | | | |
| 5 | **Base Period Ending 6/30/2026** | | | | | |
| 6 | **Test Period Ending 9/30/2028** | | | | | |
| 7 | **This schedule is sponsored by PNM Witness Gutierrez** | | | | | |
| 8 | | | | | | |
| 9 | **Description** | **FERC** | **Cost Type** | **Jan-26** | **Feb-26** | **Mar-26** |
| 140 | | 562 | 370, 374, 376,377 | 24,238 | 42,089 | 30,862 |
| 143 | | 563 | 370, 374, 376,377 | - | - | - |
| 145 | | 566 | 370, 374, 376,377 | 79,917 | 73,176 | 89,707 |
| 149 | | 567 | 370, 374, 376,377 | - | 1,322 | - |
| 153 | | 569 | 370, 374, 376,377 | - | - | (26,014) |
| 155 | | 570 | 370, 374, 376,377 | 58 | - | 8,397 |
| 157 | | 571 | 370, 374, 376,377 | 34,036 | 106,561 | 43,924 |
| 160 | | 573 | 370, 374, 376,377 | - | - | - |
| 162 | | 578 | 370, 374, 376,377 | - | - | - |
| 164 | | 580 | 370, 374, 376,377 | 7,858 | (3,054) | (29,728) |
| 167 | | 582 | 370, 374, 376,377 | 5,908 | 1,549 | 12,275 |
| 169 | | 583 | 370, 374, 376,377 | 46,972 | (3,252) | (587) |
| 171 | | 584 | 370, 374, 376,377 | 1,316 | - | 8,584 |
| 173 | | 585 | 370, 374, 376,377 | - | - | - |
| 175 | | 586 | 370, 374, 376,377 | 183 | - | - |
| 177 | | 588 | 370, 374, 376,377 | 112,780 | 22,352 | 168,506 |
| 182 | | 590 | 370, 374, 376,377 | - | - | - |
| 186 | | 591 | 370, 374, 376,377 | 1,727 | 1,468 | 1,826 |
| 188 | | 592 | 370, 374, 376,377 | 11,123 | 158 | 3,722 |
| 190 | | 593 | 370, 374, 376,377 | 174,638 | 244,258 | 2,501,973 |
| 194 | | 594 | 370, 374, 376,377 | 77,921 | 151,814 | 66,972 |
| 197 | | 596 | 370, 374, 376,377 | 22,339 | - | - |
| 200 | | 597 | 370, 374, 376,377 | - | - | - |

| | A | B | C | J | K | L |
|---|---|---|---|---|---|---|
| 1 | **Public Service Company of New Mexico** | | | | | |
| 2 | **Schedule H-5** | | | | | |
| 3 | **Expenses Associated with Advertising, Contributions,** | | | | | |
| 4 | **Donations, Lobbying and political activities, memberships, and outside services** | | | | | |
| 5 | **Base Period Ending 6/30/2026** | | | | | |
| 6 | **Test Period Ending 9/30/2028** | | | | | |
| 7 | **This schedule is sponsored by PNM Witness Gutierrez** | | | | | |
| 8 | | | | | | |
| 9 | **Description** | **FERC** | **Cost Type** | **Jan-26** | **Feb-26** | **Mar-26** |
| 202 | | 901 | 370, 374, 376,377 | - | - | - |
| 205 | | 902 | 370, 374, 376,377 | 346,636 | 105,412 | 136,287 |
| 208 | | 903 | 370, 374, 376,377 | 175,583 | 199,510 | 99,064 |
| 211 | | 904 | 370, 374, 376,377 | 10,760 | 15,405 | 13,227 |
| 213 | | 906 | 370, 374, 376,377 | 11,298 | 20,484 | 23,402 |
| 215 | | 908 | 370, 374, 376,377 | - | - | 31,093 |
| 218 | | 912 | 370, 374, 376,377 | 128,081 | 75,913 | 3,793 |
| 221 | | 922 | 370, 374, 376,377 | - | - | - |
| 225 | | 923 | 370, 374, 376,377 | 243,566 | 406,040 | 1,334,541 |
| 229 | | 924 | 370, 374, 376,377 | - | - | - |
| 231 | | 930 | 370, 374, 376,377 | - | - | 5,114 |
| 233 | | 935 | 370, 374, 376,377 | 105,322 | 117,271 | (9,024) |
| 236 | Total Outside Services | | | 3,231,111 | 3,870,609 | 8,547,647 |
| 237 | | | | | | |
| 238 | Total | | | 3,690,850 | 4,225,845 | 8,990,883 |

| | A | B | C | M | N | O |
|---|---|---|---|---|---|---|
| 1 | **Public Service Company of New Mexico** | | | | | |
| 2 | **Schedule H-5** | | | | | |
| 3 | **Expenses Associated with Advertising, Contributions,** | | | | | |
| 4 | **Donations, Lobbying and political activities, memberships, and outside services** | | | | | |
| 5 | **Base Period Ending 6/30/2026** | | | | | |
| 6 | **Test Period Ending 9/30/2028** | | | | | |
| 7 | **This schedule is sponsored by PNM Witness Gutierrez** | | | | | |
| 8 | | | | | | |
| 9 | **Description** | **FERC** | **Cost Type** | **Apr-26** | **May-26** | **Jun-26** |
| 10 | | | | | | |
| 11 | Advertising | | | | | |
| 12 | Operation Supervision & Engin | 500 | 370, 530 | - | - | - |
| 15 | Misc Steam Power Exp | 506 | 370, 530 | - | - | - |
| 17 | Maintenance Supervision & Engin | 510 | 370, 530 | - | - | - |
| 20 | Maintenance of Misc Electric Plant | 514 | 370, 530 | - | - | - |
| 23 | System Control & Load Dispatching | 556 | 370, 530 | - | - | - |
| 25 | Operation Supervision & Engin | 560 | 370, 530 | - | - | - |
| 28 | Main of Station Equipment | 570 | 370, 530 | - | - | - |
| 31 | Operation Supervision & Engin | 580 | 370, 530 | - | - | - |
| 34 | Misc Expenses | 588 | 370, 530 | - | - | - |
| 37 | Main of Overhead Line | 593 | 370, 530 | - | - | - |
| 39 | Main of Underground Lines | 594 | 370, 530 | - | - | - |
| 41 | Customer Records & Collection Exp | 902 | 370, 530 | - | 1,148 | - |
| 44 | Customer Assistance Expenses | 908 | 370, 555 | - | - | - |
| 47 | Demonstrating & Selling Exp | 912 | 370, 530 | - | - | - |
| 49 | A&G Office Supplies | 921 | 370, 530 | - | - | - |
| 53 | Shared Services (2) | 922 | 370, 550, 555 | 6,009 | 40,288 | 19,826 |
| 58 | Outside Services | 923 | 370, 555 | - | - | - |
| 60 | Main of General Plant | 935 | 370, 555 | | | |
| 61 | | | 370 - Outside Services | | | |
| 62 | Total Advertising Before 426.1 | | | 6,009 | 41,435 | 19,826 |
| 63 | | | | | | |
| 64 | Advertising in OID | 426.1 | 622-Contibutions and Donations | - | - | - |
| 66 | | | | | | |
| 67 | Total Advertising Including 426.1 | | | 6,009 | 41,435 | 19,826 |

| | A | B | C | M | N | O |
|---|---|---|---|---|---|---|
| 1 | **Public Service Company of New Mexico** | | | | | |
| 2 | **Schedule H-5** | | | | | |
| 3 | **Expenses Associated with Advertising, Contributions,** | | | | | |
| 4 | **Donations, Lobbying and political activities, memberships, and outside services** | | | | | |
| 5 | **Base Period Ending 6/30/2026** | | | | | |
| 6 | **Test Period Ending 9/30/2028** | | | | | |
| 7 | **This schedule is sponsored by PNM Witness Gutierrez** | | | | | |
| 8 | | | | | | |
| 9 | **Description** | **FERC** | **Cost Type** | **Apr-26** | **May-26** | **Jun-26** |
| 68 | | | | | | |
| 69 | Contributions and Donations | 426.1 | Various | 65,378 | 232,120 | 103,425 |
| 72 | | | | | | |
| 73 | Lobbying and Political Activities | 426.4 | Various | 55,578 | (1,565) | 27,608 |
| 76 | | | | | | |
| 77 | Memberships | Various | 530, 560 | 165,029 | 137,169 | 130,662 |
| 80 | | | | | | |
| 81 | Outside Services (1) | Various | 370, 374, 376,377 | | | |
| 82 | | 500 | 370, 374, 377 | 166,601 | 163,144 | (148,848) |
| 86 | | 501 | 370, 374, 376,377 | - | - | - |
| 89 | | 502 | 370, 374, 376,377 | - | - | - |
| 91 | | 505 | 370, 374, 376,377 | 3,639 | - | 1,379 |
| 95 | | 506 | 370, 374, 376,377 | 60,842 | 197,999 | 95,479 |
| 100 | | 510 | 370, 374, 376,377 | - | (60,000) | 40,000 |
| 103 | | 511 | 370, 374, 376,377 | 31,206 | 36,133 | 79,092 |
| 106 | | 512 | 370, 374, 376,377 | 38,938 | 79,436 | 115,483 |
| 109 | | 513 | 370, 374, 376,377 | 43,714 | 7,057 | 155,169 |
| 112 | | 514 | 370, 374, 376,377 | - | - | - |
| 114 | | 517 | 370, 374, 376,377 | - | - | - |
| 116 | | 525 | 370, 374, 376,377 | - | - | - |
| 118 | | 546 | 370, 374, 376,377 | 1,062,323 | 869,116 | 916,039 |
| 121 | | 549 | 370, 374, 376,377 | - | - | - |
| 123 | | 552 | 370, 374, 376,377 | 128,250 | (7,887) | 98,040 |
| 125 | | 553 | 370, 374, 376,377 | 703,482 | 249,986 | 291,080 |
| 129 | | 555 | 370, 374, 376,377 | - | - | - |
| 131 | | 556 | 370, 374, 376,377 | 101,297 | 39,938 | (251,456) |
| 134 | | 558 | 370, 374, 376,377 | - | - | 663,469 |
| 136 | | 560 | 370, 374, 376,377 | 177,444 | 130,057 | 128,921 |

| | A | B | C | M | N | O |
|---|---|---|---|---|---|---|
| 1 | **Public Service Company of New Mexico** | | | | | |
| 2 | **Schedule H-5** | | | | | |
| 3 | **Expenses Associated with Advertising, Contributions,** | | | | | |
| 4 | **Donations, Lobbying and political activities, memberships, and outside services** | | | | | |
| 5 | **Base Period Ending 6/30/2026** | | | | | |
| 6 | **Test Period Ending 9/30/2028** | | | | | |
| 7 | **This schedule is sponsored by PNM Witness Gutierrez** | | | | | |
| 8 | | | | | | |
| 9 | **Description** | **FERC** | **Cost Type** | **Apr-26** | **May-26** | **Jun-26** |
| 140 | | 562 | 370, 374, 376,377 | 53,259 | 50,880 | 30,706 |
| 143 | | 563 | 370, 374, 376,377 | - | - | - |
| 145 | | 566 | 370, 374, 376,377 | 104,262 | 55,485 | 46,201 |
| 149 | | 567 | 370, 374, 376,377 | - | - | - |
| 153 | | 569 | 370, 374, 376,377 | - | - | - |
| 155 | | 570 | 370, 374, 376,377 | 508 | 1,412 | 3,283 |
| 157 | | 571 | 370, 374, 376,377 | 75,287 | 44,982 | 87,664 |
| 160 | | 573 | 370, 374, 376,377 | - | - | - |
| 162 | | 578 | 370, 374, 376,377 | - | - | - |
| 164 | | 580 | 370, 374, 376,377 | (1,444) | (24,910) | 415 |
| 167 | | 582 | 370, 374, 376,377 | (9,023) | 161 | 16,809 |
| 169 | | 583 | 370, 374, 376,377 | 2,124 | 1,372 | 5,488 |
| 171 | | 584 | 370, 374, 376,377 | - | - | - |
| 173 | | 585 | 370, 374, 376,377 | - | - | - |
| 175 | | 586 | 370, 374, 376,377 | - | - | 2,481 |
| 177 | | 588 | 370, 374, 376,377 | 115,804 | 69,244 | 52,468 |
| 182 | | 590 | 370, 374, 376,377 | - | - | - |
| 186 | | 591 | 370, 374, 376,377 | 1,957 | 5,904 | 1,660 |
| 188 | | 592 | 370, 374, 376,377 | 118 | 334 | 766 |
| 190 | | 593 | 370, 374, 376,377 | 534,513 | 386,322 | 646,972 |
| 194 | | 594 | 370, 374, 376,377 | 66,056 | 35,101 | 52,809 |
| 197 | | 596 | 370, 374, 376,377 | 88,529 | 21,210 | 25,554 |
| 200 | | 597 | 370, 374, 376,377 | - | - | - |

| | A | B | C | M | N | O |
|---|---|---|---|---|---|---|
| 1 | **Public Service Company of New Mexico** | | | | | |
| 2 | **Schedule H-5** | | | | | |
| 3 | **Expenses Associated with Advertising, Contributions,** | | | | | |
| 4 | **Donations, Lobbying and political activities, memberships, and outside services** | | | | | |
| 5 | **Base Period Ending 6/30/2026** | | | | | |
| 6 | **Test Period Ending 9/30/2028** | | | | | |
| 7 | **This schedule is sponsored by PNM Witness Gutierrez** | | | | | |
| 8 | | | | | | |
| 9 | **Description** | **FERC** | **Cost Type** | **Apr-26** | **May-26** | **Jun-26** |
| 202 | | 901 | 370, 374, 376,377 | - | - | - |
| 205 | | 902 | 370, 374, 376,377 | 109,513 | 130,267 | 142,859 |
| 208 | | 903 | 370, 374, 376,377 | 248,483 | 246,320 | 194,079 |
| 211 | | 904 | 370, 374, 376,377 | 21,344 | 17,507 | 14,476 |
| 213 | | 906 | 370, 374, 376,377 | 20,800 | 21,565 | 39,047 |
| 215 | | 908 | 370, 374, 376,377 | - | - | - |
| 218 | | 912 | 370, 374, 376,377 | 25,629 | 41,916 | 20,119 |
| 221 | | 922 | 370, 374, 376,377 | - | - | - |
| 225 | | 923 | 370, 374, 376,377 | 207,146 | 187,170 | 789,977 |
| 229 | | 924 | 370, 374, 376,377 | - | - | - |
| 231 | | 930 | 370, 374, 376,377 | - | - | - |
| 233 | | 935 | 370, 374, 376,377 | 103,742 | 33,422 | 106,489 |
| 236 | Total Outside Services | | | 4,286,343 | 3,030,641 | 4,464,167 |
| 237 | | | | | | |
| 238 | Total | | | 4,578,336 | 3,439,801 | 4,745,687 |

| | A | B | C | P | Q | R |
|---|---|---|---|---|---|---|
| 1 | **Public Service Company of New Mexico** | | | | | |
| 2 | **Schedule H-5** | | | | | |
| 3 | **Expenses Associated with Advertising, Contributions,** | | | | | |
| 4 | **Donations, Lobbying and political activities, memberships, and outside services** | | | | | |
| 5 | **Base Period Ending 6/30/2026** | | | | | |
| 6 | **Test Period Ending 9/30/2028** | | | | | |
| 7 | **This schedule is sponsored by PNM Witness Gutierrez** | | | | | |
| 8 | | | | | | |
| 9 | **Description** | **FERC** | **Cost Type** | **Base Period Total** | **Base Period Adjustments** | **Adjusted Base Period Total** |
| 10 | | | | | | |
| 11 | Advertising | | | | | |
| 12 | Operation Supervision & Engin | 500 | 370, 530 | - | - | - |
| 15 | Misc Steam Power Exp | 506 | 370, 530 | - | - | - |
| 17 | Maintenance Supervision & Engin | 510 | 370, 530 | - | - | - |
| 20 | Maintenance of Misc Electric Plant | 514 | 370, 530 | - | - | - |
| 23 | System Control & Load Dispatching | 556 | 370, 530 | - | - | - |
| 25 | Operation Supervision & Engin | 560 | 370, 530 | - | - | - |
| 28 | Main of Station Equipment | 570 | 370, 530 | - | - | - |
| 31 | Operation Supervision & Engin | 580 | 370, 530 | - | - | - |
| 34 | Misc Expenses | 588 | 370, 530 | - | - | - |
| 37 | Main of Overhead Line | 593 | 370, 530 | - | - | - |
| 39 | Main of Underground Lines | 594 | 370, 530 | - | - | - |
| 41 | Customer Records & Collection Exp | 902 | 370, 530 | 97,367 | - | 97,367 |
| 44 | Customer Assistance Expenses | 908 | 370, 555 | - | - | - |
| 47 | Demonstrating & Selling Exp | 912 | 370, 530 | - | - | - |
| 49 | A&G Office Supplies | 921 | 370, 530 | - | - | - |
| 53 | Shared Services (2) | 922 | 370, 550, 555 | 837,388 | (769,810) | 67,578 |
| 58 | Outside Services | 923 | 370, 555 | - | - | - |
| 60 | Main of General Plant | 935 | 370, 555 | - | - | - |
| 61 | | | 370 - Outside Services | | | - |
| 62 | Total Advertising Before 426.1 | | | 934,755 | (769,810) | 164,945 |
| 63 | | | | | | |
| 64 | Advertising in OID | 426.1 | 622-Contibutions and Donations | - | - | - |
| 66 | | | | | | |
| 67 | Total Advertising Including 426.1 | | | 934,755 | (769,810) | 164,945 |

| | A | B | C | P | Q | R |
|---|---|---|---|---|---|---|
| 1 | **Public Service Company of New Mexico** | | | | | |
| 2 | **Schedule H-5** | | | | | |
| 3 | **Expenses Associated with Advertising, Contributions,** | | | | | |
| 4 | **Donations, Lobbying and political activities, memberships, and outside services** | | | | | |
| 5 | **Base Period Ending 6/30/2026** | | | | | |
| 6 | **Test Period Ending 9/30/2028** | | | | | |
| 7 | **This schedule is sponsored by PNM Witness Gutierrez** | | | | | |
| 8 | | | | | | |
| 9 | **Description** | **FERC** | **Cost Type** | **Base Period Total** | **Base Period Adjustments** | **Adjusted Base Period Total** |
| 68 | | | | | | |
| 69 | Contributions and Donations | 426.1 | Various | 1,135,973 | (1,135,973) | - |
| 72 | | | | | | |
| 73 | Lobbying and Political Activities | 426.4 | Various | 845,254 | (845,254) | - |
| 76 | | | | | | |
| 77 | Memberships | Various | 530, 560 | 1,700,867 | (1,700,867) | - |
| 80 | | | | | | |
| 81 | Outside Services (1) | Various | 370, 374, 376,377 | | | |
| 82 | | 500 | 370, 374, 377 | 462,269 | (247,835) | 214,434 |
| 86 | | 501 | 370, 374, 376,377 | - | - | - |
| 89 | | 502 | 370, 374, 376,377 | - | - | - |
| 91 | | 505 | 370, 374, 376,377 | 5,018 | - | 5,018 |
| 95 | | 506 | 370, 374, 376,377 | 1,647,331 | (1,634,235) | 13,096 |
| 100 | | 510 | 370, 374, 376,377 | 128,475 | - | 128,475 |
| 103 | | 511 | 370, 374, 376,377 | 555,897 | - | 555,897 |
| 106 | | 512 | 370, 374, 376,377 | 680,671 | 179,505 | 860,177 |
| 109 | | 513 | 370, 374, 376,377 | 489,586 | 726,642 | 1,216,227 |
| 112 | | 514 | 370, 374, 376,377 | - | - | - |
| 114 | | 517 | 370, 374, 376,377 | 48,592 | - | 48,592 |
| 116 | | 525 | 370, 374, 376,377 | - | - | - |
| 118 | | 546 | 370, 374, 376,377 | 15,125,548 | (534,186) | 14,591,362 |
| 121 | | 549 | 370, 374, 376,377 | 302 | - | 302 |
| 123 | | 552 | 370, 374, 376,377 | 768,300 | 149 | 768,448 |
| 125 | | 553 | 370, 374, 376,377 | 4,069,544 | 2,193,833 | 6,263,378 |
| 129 | | 555 | 370, 374, 376,377 | - | - | - |
| 131 | | 556 | 370, 374, 376,377 | 792,576 | - | 792,576 |
| 134 | | 558 | 370, 374, 376,377 | 2,877,250 | - | 2,877,250 |
| 136 | | 560 | 370, 374, 376,377 | 1,176,420 | - | 1,176,420 |

| | A | B | C | P | Q | R |
|---|---|---|---|---|---|---|
| 1 | **Public Service Company of New Mexico** | | | | | |
| 2 | **Schedule H-5** | | | | | |
| 3 | **Expenses Associated with Advertising, Contributions,** | | | | | |
| 4 | **Donations, Lobbying and political activities, memberships, and outside services** | | | | | |
| 5 | **Base Period Ending 6/30/2026** | | | | | |
| 6 | **Test Period Ending 9/30/2028** | | | | | |
| 7 | **This schedule is sponsored by PNM Witness Gutierrez** | | | | | |
| 8 | | | | | | |
| 9 | **Description** | **FERC** | **Cost Type** | **Base Period Total** | **Base Period Adjustments** | **Adjusted Base Period Total** |
| 140 | | 562 | 370, 374, 376,377 | 389,276 | - | 389,276 |
| 143 | | 563 | 370, 374, 376,377 | - | - | - |
| 145 | | 566 | 370, 374, 376,377 | 1,472,253 | - | 1,472,253 |
| 149 | | 567 | 370, 374, 376,377 | 127,823 | (126,501) | 1,322 |
| 153 | | 569 | 370, 374, 376,377 | - | - | - |
| 155 | | 570 | 370, 374, 376,377 | 26,101 | (388,900) | (362,798) |
| 157 | | 571 | 370, 374, 376,377 | 840,289 | - | 840,289 |
| 160 | | 573 | 370, 374, 376,377 | - | - | - |
| 162 | | 578 | 370, 374, 376,377 | 61,992 | - | 61,992 |
| 164 | | 580 | 370, 374, 376,377 | 459,307 | - | 459,307 |
| 167 | | 582 | 370, 374, 376,377 | 90,207 | - | 90,207 |
| 169 | | 583 | 370, 374, 376,377 | 83,462 | - | 83,462 |
| 171 | | 584 | 370, 374, 376,377 | 13,072 | - | 13,072 |
| 173 | | 585 | 370, 374, 376,377 | - | - | - |
| 175 | | 586 | 370, 374, 376,377 | 52,522 | - | 52,522 |
| 177 | | 588 | 370, 374, 376,377 | 1,487,723 | - | 1,487,723 |
| 182 | | 590 | 370, 374, 376,377 | 745 | - | 745 |
| 186 | | 591 | 370, 374, 376,377 | 28,861 | - | 28,861 |
| 188 | | 592 | 370, 374, 376,377 | 60,050 | - | 60,050 |
| 190 | | 593 | 370, 374, 376,377 | 8,479,244 | (27,274) | 8,451,970 |
| 194 | | 594 | 370, 374, 376,377 | 926,227 | - | 926,227 |
| 197 | | 596 | 370, 374, 376,377 | 420,740 | - | 420,740 |
| 200 | | 597 | 370, 374, 376,377 | 434 | - | 434 |

| | A | B | C | P | Q | R |
|---|---|---|---|---|---|---|
| 1 | **Public Service Company of New Mexico** | | | | | |
| 2 | **Schedule H-5** | | | | | |
| 3 | **Expenses Associated with Advertising, Contributions,** | | | | | |
| 4 | **Donations, Lobbying and political activities, memberships, and outside services** | | | | | |
| 5 | **Base Period Ending 6/30/2026** | | | | | |
| 6 | **Test Period Ending 9/30/2028** | | | | | |
| 7 | **This schedule is sponsored by PNM Witness Gutierrez** | | | | | |
| 8 | | | | | | |
| 9 | **Description** | **FERC** | **Cost Type** | **Base Period Total** | **Base Period Adjustments** | **Adjusted Base Period Total** |
| 202 | | 901 | 370, 374, 376,377 | - | - | - |
| 205 | | 902 | 370, 374, 376,377 | 1,615,855 | - | 1,615,855 |
| 208 | | 903 | 370, 374, 376,377 | 2,545,077 | - | 2,545,077 |
| 211 | | 904 | 370, 374, 376,377 | 177,388 | - | 177,388 |
| 213 | | 906 | 370, 374, 376,377 | 136,595 | - | 136,595 |
| 215 | | 908 | 370, 374, 376,377 | 31,133 | - | 31,133 |
| 218 | | 912 | 370, 374, 376,377 | 408,561 | (44,269) | 364,292 |
| 221 | | 922 | 370, 374, 376,377 | - | - | - |
| 225 | | 923 | 370, 374, 376,377 | 5,313,316 | (4,347,004) | 966,312 |
| 229 | | 924 | 370, 374, 376,377 | - | - | - |
| 231 | | 930 | 370, 374, 376,377 | 5,114 | - | 5,114 |
| 233 | | 935 | 370, 374, 376,377 | 921,963 | - | 921,963 |
| 236 | Total Outside Services | | | 55,003,109 | (4,250,075) | 50,753,033 |
| 237 | | | | | | |
| 238 | Total | | | 59,619,958 | (8,701,980) | 50,917,978 |

| | A | B | C | S | T | U |
|---|---|---|---|---|---|---|
| 1 | **Public Service Company of New Mexico** | | | | | |
| 2 | **Schedule H-5** | | | | | |
| 3 | **Expenses Associated with Advertising, Contributions,** | | | | | |
| 4 | **Donations, Lobbying and political activities, memberships, and outside services** | | | | | |
| 5 | **Base Period Ending 6/30/2026** | | | | | |
| 6 | **Test Period Ending 9/30/2028** | | | | | |
| 7 | **This schedule is sponsored by PNM Witness Gutierrez** | | | | | |
| 8 | | | | | | |
| 9 | **Description** | **FERC** | **Cost Type** | **Linkage 1 Jul-26 - Jun-27** | **Linkage 2 Oct-26 - Sep-27** | **Test Period** |
| 10 | | | | | | |
| 11 | Advertising | | | | | |
| 12 | Operation Supervision & Engin | 500 | 370, 530 | - | - | - |
| 15 | Misc Steam Power Exp | 506 | 370, 530 | - | - | - |
| 17 | Maintenance Supervision & Engin | 510 | 370, 530 | - | - | - |
| 20 | Maintenance of Misc Electric Plant | 514 | 370, 530 | - | - | - |
| 23 | System Control & Load Dispatching | 556 | 370, 530 | - | - | - |
| 25 | Operation Supervision & Engin | 560 | 370, 530 | - | - | - |
| 28 | Main of Station Equipment | 570 | 370, 530 | - | - | - |
| 31 | Operation Supervision & Engin | 580 | 370, 530 | - | - | - |
| 34 | Misc Expenses | 588 | 370, 530 | - | - | - |
| 37 | Main of Overhead Line | 593 | 370, 530 | - | - | - |
| 39 | Main of Underground Lines | 594 | 370, 530 | - | - | - |
| 41 | Customer Records & Collection Exp | 902 | 370, 530 | 100,288 | 100,288 | 103,296 |
| 44 | Customer Assistance Expenses | 908 | 370, 555 | - | - | - |
| 47 | Demonstrating & Selling Exp | 912 | 370, 530 | - | - | - |
| 49 | A&G Office Supplies | 921 | 370, 530 | - | - | - |
| 53 | Shared Services (2) | 922 | 370, 550, 555 | 69,605 | 69,605 | 71,693 |
| 58 | Outside Services | 923 | 370, 555 | - | - | - |
| 60 | Main of General Plant | 935 | 370, 555 | - | - | - |
| 61 | | | 370 - Outside Services | - | - | - |
| 62 | Total Advertising Before 426.1 | | | 169,893 | 169,893 | 174,990 |
| 63 | | | | | | |
| 64 | Advertising in OID | 426.1 | 622-Contibutions and Donations | - | - | - |
| 66 | | | | | | |
| 67 | Total Advertising Including 426.1 | | | 169,893 | 169,893 | 174,990 |

| | A | B | C | S | T | U |
|---|---|---|---|---|---|---|
| 1 | **Public Service Company of New Mexico** | | | | | |
| 2 | **Schedule H-5** | | | | | |
| 3 | **Expenses Associated with Advertising, Contributions,** | | | | | |
| 4 | **Donations, Lobbying and political activities, memberships, and outside services** | | | | | |
| 5 | **Base Period Ending 6/30/2026** | | | | | |
| 6 | **Test Period Ending 9/30/2028** | | | | | |
| 7 | **This schedule is sponsored by PNM Witness Gutierrez** | | | | | |
| 8 | | | | | | |
| 9 | **Description** | **FERC** | **Cost Type** | **Linkage 1 Jul-26 - Jun-27** | **Linkage 2 Oct-26 - Sep-27** | **Test Period** |
| 68 | | | | | | |
| 69 | Contributions and Donations | 426.1 | Various | - | - | - |
| 72 | | | | | | |
| 73 | Lobbying and Political Activities | 426.4 | Various | - | - | - |
| 76 | | | | | | |
| 77 | Memberships | Various | 530, 560 | - | - | - |
| 80 | | | | | | |
| 81 | Outside Services (1) | Various | 370, 374, 376,377 | | | |
| 82 | | 500 | 370, 374, 377 | 220,867 | 220,867 | 227,493 |
| 86 | | 501 | 370, 374, 376,377 | - | - | - |
| 89 | | 502 | 370, 374, 376,377 | - | - | - |
| 91 | | 505 | 370, 374, 376,377 | 5,169 | 5,169 | 5,324 |
| 95 | | 506 | 370, 374, 376,377 | 13,489 | 13,489 | 13,893 |
| 100 | | 510 | 370, 374, 376,377 | 132,329 | 132,329 | 136,299 |
| 103 | | 511 | 370, 374, 376,377 | 572,574 | 572,574 | 589,751 |
| 106 | | 512 | 370, 374, 376,377 | 885,982 | 885,982 | 912,561 |
| 109 | | 513 | 370, 374, 376,377 | 1,252,714 | 1,252,714 | 1,290,296 |
| 112 | | 514 | 370, 374, 376,377 | - | - | - |
| 114 | | 517 | 370, 374, 376,377 | 50,050 | 50,050 | 51,551 |
| 116 | | 525 | 370, 374, 376,377 | - | - | - |
| 118 | | 546 | 370, 374, 376,377 | 15,029,103 | 15,029,103 | 15,479,976 |
| 121 | | 549 | 370, 374, 376,377 | 311 | 311 | 320 |
| 123 | | 552 | 370, 374, 376,377 | 791,502 | 791,502 | 815,247 |
| 125 | | 553 | 370, 374, 376,377 | 6,451,279 | 6,451,279 | 6,644,817 |
| 129 | | 555 | 370, 374, 376,377 | - | - | - |
| 131 | | 556 | 370, 374, 376,377 | 816,353 | 816,353 | 840,844 |
| 134 | | 558 | 370, 374, 376,377 | 2,963,568 | 2,963,568 | 3,052,475 |
| 136 | | 560 | 370, 374, 376,377 | 1,211,713 | 1,211,713 | 1,248,064 |

| | A | B | C | S | T | U |
|---|---|---|---|---|---|---|
| 1 | **Public Service Company of New Mexico** | | | | | |
| 2 | **Schedule H-5** | | | | | |
| 3 | **Expenses Associated with Advertising, Contributions,** | | | | | |
| 4 | **Donations, Lobbying and political activities, memberships, and outside services** | | | | | |
| 5 | **Base Period Ending 6/30/2026** | | | | | |
| 6 | **Test Period Ending 9/30/2028** | | | | | |
| 7 | **This schedule is sponsored by PNM Witness Gutierrez** | | | | | |
| 8 | | | | | | |
| 9 | **Description** | **FERC** | **Cost Type** | **Linkage 1 Jul-26 - Jun-27** | **Linkage 2 Oct-26 - Sep-27** | **Test Period** |
| 140 | | 562 | 370, 374, 376,377 | 400,954 | 400,954 | 412,982 |
| 143 | | 563 | 370, 374, 376,377 | - | - | - |
| 145 | | 566 | 370, 374, 376,377 | 1,516,421 | 1,516,421 | 1,561,914 |
| 149 | | 567 | 370, 374, 376,377 | 1,362 | 1,362 | 1,403 |
| 153 | | 569 | 370, 374, 376,377 | - | - | - |
| 155 | | 570 | 370, 374, 376,377 | (373,682) | (373,682) | (384,893) |
| 157 | | 571 | 370, 374, 376,377 | 865,497 | 865,497 | 891,462 |
| 160 | | 573 | 370, 374, 376,377 | - | - | - |
| 162 | | 578 | 370, 374, 376,377 | 63,852 | 63,852 | 65,767 |
| 164 | | 580 | 370, 374, 376,377 | 473,086 | 473,086 | 487,278 |
| 167 | | 582 | 370, 374, 376,377 | 92,913 | 92,913 | 95,700 |
| 169 | | 583 | 370, 374, 376,377 | 85,966 | 85,966 | 88,545 |
| 171 | | 584 | 370, 374, 376,377 | 13,464 | 13,464 | 13,868 |
| 173 | | 585 | 370, 374, 376,377 | - | - | - |
| 175 | | 586 | 370, 374, 376,377 | 54,098 | 54,098 | 55,721 |
| 177 | | 588 | 370, 374, 376,377 | 1,532,355 | 1,532,355 | 1,578,325 |
| 182 | | 590 | 370, 374, 376,377 | 767 | 767 | 790 |
| 186 | | 591 | 370, 374, 376,377 | 29,727 | 29,727 | 30,619 |
| 188 | | 592 | 370, 374, 376,377 | 61,852 | 61,852 | 63,707 |
| 190 | | 593 | 370, 374, 376,377 | 8,705,529 | 8,705,529 | 8,966,694 |
| 194 | | 594 | 370, 374, 376,377 | 954,013 | 954,013 | 982,634 |
| 197 | | 596 | 370, 374, 376,377 | 433,362 | 433,362 | 446,363 |
| 200 | | 597 | 370, 374, 376,377 | 447 | 447 | 460 |

| | A | B | C | S | T | U |
|---|---|---|---|---|---|---|
| 1 | **Public Service Company of New Mexico** | | | | | |
| 2 | **Schedule H-5** | | | | | |
| 3 | **Expenses Associated with Advertising, Contributions,** | | | | | |
| 4 | **Donations, Lobbying and political activities, memberships, and outside services** | | | | | |
| 5 | **Base Period Ending 6/30/2026** | | | | | |
| 6 | **Test Period Ending 9/30/2028** | | | | | |
| 7 | **This schedule is sponsored by PNM Witness Gutierrez** | | | | | |
| 8 | | | | | | |
| 9 | **Description** | **FERC** | **Cost Type** | **Linkage 1 Jul-26 - Jun-27** | **Linkage 2 Oct-26 - Sep-27** | **Test Period** |
| 202 | | 901 | 370, 374, 376,377 | - | - | - |
| 205 | | 902 | 370, 374, 376,377 | 1,664,331 | 1,664,331 | 1,714,261 |
| 208 | | 903 | 370, 374, 376,377 | 2,621,429 | 2,621,429 | 2,700,072 |
| 211 | | 904 | 370, 374, 376,377 | 182,710 | 182,710 | 188,191 |
| 213 | | 906 | 370, 374, 376,377 | 140,692 | 140,692 | 144,913 |
| 215 | | 908 | 370, 374, 376,377 | 32,067 | 32,067 | 33,029 |
| 218 | | 912 | 370, 374, 376,377 | 375,220 | 375,220 | 386,477 |
| 221 | | 922 | 370, 374, 376,377 | - | - | - |
| 225 | | 923 | 370, 374, 376,377 | 995,301 | 995,301 | 1,025,160 |
| 229 | | 924 | 370, 374, 376,377 | - | - | - |
| 231 | | 930 | 370, 374, 376,377 | 5,267 | 5,267 | 5,425 |
| 233 | | 935 | 370, 374, 376,377 | 949,622 | 949,622 | 978,111 |
| 236 | Total Outside Services | | | 52,275,624 | 52,275,624 | 53,843,893 |
| 237 | | | | | | |
| 238 | Total | | | 52,445,517 | 52,445,517 | 54,018,883 |

| | A | B | C | V | W | X |
|---|---|---|---|---|---|---|
| 1 | **Public Service Company of New Mexico** | | | | | |
| 2 | **Schedule H-5** | | | | | |
| 3 | **Expenses Associated with Advertising, Contributions,** | | | | | |
| 4 | **Donations, Lobbying and political activities, memberships, and outside services** | | | | | |
| 5 | **Base Period Ending 6/30/2026** | | | | | |
| 6 | **Test Period Ending 9/30/2028** | | | | | |
| 7 | **This schedule is sponsored by PNM Witness Gutierrez** | | | | | |
| 8 | | | | | | |
| 9 | **Description** | **FERC** | **Cost Type** | **Adjusted Test Period Total** | **Adjusted Base and Test Periods Variance** | **Reference** |
| 10 | | | | | | |
| 11 | Advertising | | | | | |
| 12 | Operation Supervision & Engin | 500 | 370, 530 | - | - | |
| 15 | Misc Steam Power Exp | 506 | 370, 530 | - | - | |
| 17 | Maintenance Supervision & Engin | 510 | 370, 530 | - | - | |
| 20 | Maintenance of Misc Electric Plant | 514 | 370, 530 | - | - | |
| 23 | System Control & Load Dispatching | 556 | 370, 530 | - | - | |
| 25 | Operation Supervision & Engin | 560 | 370, 530 | - | - | |
| 28 | Main of Station Equipment | 570 | 370, 530 | - | - | |
| 31 | Operation Supervision & Engin | 580 | 370, 530 | - | - | |
| 34 | Misc Expenses | 588 | 370, 530 | - | - | |
| 37 | Main of Overhead Line | 593 | 370, 530 | - | - | |
| 39 | Main of Underground Lines | 594 | 370, 530 | - | - | |
| 41 | Customer Records & Collection Exp | 902 | 370, 530 | 103,296 | 5,930 | |
| 44 | Customer Assistance Expenses | 908 | 370, 555 | - | - | |
| 47 | Demonstrating & Selling Exp | 912 | 370, 530 | - | - | |
| 49 | A&G Office Supplies | 921 | 370, 530 | - | - | |
| 53 | Shared Services (2) | 922 | 370, 550, 555 | 71,693 | 4,115 | |
| 58 | Outside Services | 923 | 370, 555 | - | - | |
| 60 | Main of General Plant | 935 | 370, 555 | - | - | |
| 61 | | | 370 - Outside Services | - | - | |
| 62 | Total Advertising Before 426.1 | | | 174,990 | 10,045 | |
| 63 | | | | | | |
| 64 | Advertising in OID | 426.1 | 622-Contibutions and Donations | - | - | |
| 66 | | | | | | |
| 67 | Total Advertising Including 426.1 | | | 174,990 | 10,045 | |

| | A | B | C | V | W | X |
|---|---|---|---|---|---|---|
| 1 | **Public Service Company of New Mexico** | | | | | |
| 2 | **Schedule H-5** | | | | | |
| 3 | **Expenses Associated with Advertising, Contributions,** | | | | | |
| 4 | **Donations, Lobbying and political activities, memberships, and outside services** | | | | | |
| 5 | **Base Period Ending 6/30/2026** | | | | | |
| 6 | **Test Period Ending 9/30/2028** | | | | | |
| 7 | **This schedule is sponsored by PNM Witness Gutierrez** | | | | | |
| 8 | | | | | | |
| 9 | **Description** | **FERC** | **Cost Type** | **Adjusted Test Period Total** | **Adjusted Base and Test Periods Variance** | **Reference** |
| 68 | | | | | | |
| 69 | Contributions and Donations | 426.1 | Various | - | - | |
| 72 | | | | | | |
| 73 | Lobbying and Political Activities | 426.4 | Various | - | - | |
| 76 | | | | | | |
| 77 | Memberships | Various | 530, 560 | - | - | |
| 80 | | | | | | |
| 81 | Outside Services (1) | Various | 370, 374, 376,377 | | | |
| 82 | | 500 | 370, 374, 377 | 227,493 | 13,059 | |
| 86 | | 501 | 370, 374, 376,377 | - | - | |
| 89 | | 502 | 370, 374, 376,377 | - | - | |
| 91 | | 505 | 370, 374, 376,377 | 5,324 | 306 | |
| 95 | | 506 | 370, 374, 376,377 | 13,893 | 798 | |
| 100 | | 510 | 370, 374, 376,377 | 136,299 | 7,824 | |
| 103 | | 511 | 370, 374, 376,377 | 589,751 | 33,854 | |
| 106 | | 512 | 370, 374, 376,377 | 912,561 | 52,385 | |
| 109 | | 513 | 370, 374, 376,377 | 1,290,296 | 74,068 | |
| 112 | | 514 | 370, 374, 376,377 | - | - | |
| 114 | | 517 | 370, 374, 376,377 | 51,551 | 2,959 | |
| 116 | | 525 | 370, 374, 376,377 | - | - | |
| 118 | | 546 | 370, 374, 376,377 | 15,479,976 | 888,614 | |
| 121 | | 549 | 370, 374, 376,377 | 320 | 18 | |
| 123 | | 552 | 370, 374, 376,377 | 815,247 | 46,799 | |
| 125 | | 553 | 370, 374, 376,377 | 6,644,817 | 381,440 | |
| 129 | | 555 | 370, 374, 376,377 | - | - | |
| 131 | | 556 | 370, 374, 376,377 | 840,844 | 48,268 | |
| 134 | | 558 | 370, 374, 376,377 | 3,052,475 | 175,225 | |
| 136 | | 560 | 370, 374, 376,377 | 1,248,064 | 71,644 | |

| | A | B | C | V | W | X |
|---|---|---|---|---|---|---|
| 1 | **Public Service Company of New Mexico** | | | | | |
| 2 | **Schedule H-5** | | | | | |
| 3 | **Expenses Associated with Advertising, Contributions,** | | | | | |
| 4 | **Donations, Lobbying and political activities, memberships, and outside services** | | | | | |
| 5 | **Base Period Ending 6/30/2026** | | | | | |
| 6 | **Test Period Ending 9/30/2028** | | | | | |
| 7 | **This schedule is sponsored by PNM Witness Gutierrez** | | | | | |
| 8 | | | | | | |
| 9 | **Description** | **FERC** | **Cost Type** | **Adjusted Test Period Total** | **Adjusted Base and Test Periods Variance** | **Reference** |
| 140 | | 562 | 370, 374, 376,377 | 412,982 | 23,707 | |
| 143 | | 563 | 370, 374, 376,377 | - | - | |
| 145 | | 566 | 370, 374, 376,377 | 1,561,914 | 89,660 | |
| 149 | | 567 | 370, 374, 376,377 | 1,403 | 81 | |
| 153 | | 569 | 370, 374, 376,377 | - | - | |
| 155 | | 570 | 370, 374, 376,377 | (384,893) | (22,094) | |
| 157 | | 571 | 370, 374, 376,377 | 891,462 | 51,174 | |
| 160 | | 573 | 370, 374, 376,377 | - | - | |
| 162 | | 578 | 370, 374, 376,377 | 65,767 | 3,775 | |
| 164 | | 580 | 370, 374, 376,377 | 487,278 | 27,972 | |
| 167 | | 582 | 370, 374, 376,377 | 95,700 | 5,494 | |
| 169 | | 583 | 370, 374, 376,377 | 88,545 | 5,083 | |
| 171 | | 584 | 370, 374, 376,377 | 13,868 | 796 | |
| 173 | | 585 | 370, 374, 376,377 | - | - | |
| 175 | | 586 | 370, 374, 376,377 | 55,721 | 3,199 | |
| 177 | | 588 | 370, 374, 376,377 | 1,578,325 | 90,602 | |
| 182 | | 590 | 370, 374, 376,377 | 790 | 45 | |
| 186 | | 591 | 370, 374, 376,377 | 30,619 | 1,758 | |
| 188 | | 592 | 370, 374, 376,377 | 63,707 | 3,657 | |
| 190 | | 593 | 370, 374, 376,377 | 8,966,694 | 514,725 | |
| 194 | | 594 | 370, 374, 376,377 | 982,634 | 56,407 | |
| 197 | | 596 | 370, 374, 376,377 | 446,363 | 25,623 | |
| 200 | | 597 | 370, 374, 376,377 | 460 | 26 | |

| | A | B | C | V | W | X |
|---|---|---|---|---|---|---|
| 1 | **Public Service Company of New Mexico** | | | | | |
| 2 | **Schedule H-5** | | | | | |
| 3 | **Expenses Associated with Advertising, Contributions,** | | | | | |
| 4 | **Donations, Lobbying and political activities, memberships, and outside services** | | | | | |
| 5 | **Base Period Ending 6/30/2026** | | | | | |
| 6 | **Test Period Ending 9/30/2028** | | | | | |
| 7 | **This schedule is sponsored by PNM Witness Gutierrez** | | | | | |
| 8 | | | | | | |
| 9 | **Description** | **FERC** | **Cost Type** | **Adjusted Test Period Total** | **Adjusted Base and Test Periods Variance** | **Reference** |
| 202 | | 901 | 370, 374, 376,377 | - | - | |
| 205 | | 902 | 370, 374, 376,377 | 1,714,261 | 98,406 | |
| 208 | | 903 | 370, 374, 376,377 | 2,700,072 | 154,995 | |
| 211 | | 904 | 370, 374, 376,377 | 188,191 | 10,803 | |
| 213 | | 906 | 370, 374, 376,377 | 144,913 | 8,319 | |
| 215 | | 908 | 370, 374, 376,377 | 33,029 | 1,896 | |
| 218 | | 912 | 370, 374, 376,377 | 386,477 | 22,185 | |
| 221 | | 922 | 370, 374, 376,377 | - | - | |
| 225 | | 923 | 370, 374, 376,377 | 1,025,160 | 58,848 | |
| 229 | | 924 | 370, 374, 376,377 | - | - | |
| 231 | | 930 | 370, 374, 376,377 | 5,425 | 311 | |
| 233 | | 935 | 370, 374, 376,377 | 978,111 | 56,148 | |
| 236 | Total Outside Services | | | 53,843,893 | 3,090,860 | |
| 237 | | | | | | |
| 238 | Total | | | 54,018,883 | 3,100,905 | |

| | A |
|---|---|
| 1 | **Public Service Company of New Mexico** |
| 2 | **Schedule H-5** |
| 3 | **Expenses Associated with Advertising, Contributions, and Donations (Notes)** |
| 4 | **Base Period Ending 6/30/2026** |
| 5 | **Test Period Ending 9/30/2028** |
| 6 | **This schedule is sponsored by PNM Witness Gutierrez** |
| 7 | |
| 8 | |
| 9 | Base period data is historical information from the Company's Book Balance Amounts |
| 10 | (1) Includes outside services expensed to FERC 923000 as well as other A&G FERC Accounts |
| 11 | (2) Shared Services are shown at 100% dollars. |
| 12 | Advertising expenses above related Outside Services cost types are additionally included in the Outside Services |
| 13 | section of this schedule. |
| 14 | Please refer to PNM Exhibit RNG-4 WP OM for support of the Base Period Adjustments and support for the test period |
| 15 | values. |
| 16 | The electronic version of this worksheet uses Microsoft Excel's outline function. The function groups rows for print |
| 17 | formatting purposes. |

# PNM Schedule H-6

Other administrative and general expenses

| | A |
|---|---|
| 1 | **Public Service Company of New Mexico** |
| 2 | **Schedule H-6** |
| 3 | **Other A&G Expenses** |
| 4 | **Base Period Ending 6/30/2026** |
| 5 | **Test Period Ending 9/30/2028** |
| 6 | **This schedule is sponsored by PNM Witness Gutierrez** |
| 7 | |
| 8 | Please refer to Schedule H-1 for information on Other Administrative and General Expenses. |
| 9 | See also PNM Exhibit RNG-4 WP OM-2 for adjustments to A&G expenses. |
| 10 | Please refer to the testimony of PNM Witness Gutierrez. |

# PNM Schedule H-7

Depreciation and amortization expense

| | A | B | C | D | E | F | G |
|---|---|---|---|---|---|---|---|
| 1 | **Public Service Company of New Mexico** | | | | | | |
| 2 | **Schedule H-7** | | | | | | |
| 3 | **Depreciation and Amortization Expense** | | | | | | |
| 4 | **Base Period Ending 6/30/2026** | | | | | | |
| 5 | **Test Period Ending 9/30/2028** | | | | | | |
| 6 | Link to WP Plant Lead Sheet | | | | | | |
| 7 | **Base Period data is historical Information from the Company's Books and Records.** | | | | | | |
| 8 | This schedule is sponsored by PNM Witness Gutierrez | | | | | | |
| 9 | Please see the Direct Testimony of PNM Witnesses Gutierrez for discussion of adjustments/changes to the Base Period, Test Period, and Linkage Data. | | | | | Rule 530 Schedule B-3 Column F | Rule 530 Schedule B-3 Column R |
| 10 | **Location** | **Location Number Note 7** | **FERC** | **Loc/FERC** | **FERC Description** | **Base Period Plant in Service Beginning Balance 7/1/2025** | **Base Period Plant in Service Ending Balance 6/30/2026** |
| 11 | | | | | | | |
| 12 | **Gross Plant Production Plant** | | | | | | |
| 13 | **Steam Production** | | | | | | |
| 56 | **All - Steam** | | | | | | |
| 57 | | | 310 | | Land and Land Rights | 618,487 | 618,487 |
| 58 | | | 310.1 | | Land Right of Way | 25,958 | 25,958 |
| 59 | | | 311 | | Structures & Improvements | 34,030,341 | 34,059,073 |
| 60 | | | 312 | | Boiler Plant Equipment | 311,210,647 | 312,355,608 |
| 61 | | | 314 | | Turbogenerator Units | 72,876,461 | 76,285,943 |
| 62 | | | 315 | | Accessory Electric Equipment | 25,464,048 | 25,314,103 |
| 63 | | | 315.01 | | Computer Hardware | - | - |
| 64 | | | 315.02 | | Computer Software | 1,346,383 | 1,362,246 |
| 65 | | | 315.03 | | Communication Equipment | 322,679 | 334,053 |
| 66 | | | 316 | | Misc Power Plant Equipment | 34,637,657 | 35,518,438 |
| 67 | | | 317 | | Asset Retirement Costs - Steam | 7,441,454 | 10,249,476 |
| 68 | **Total Steam Production Gross Plant** | | | | | 487,974,115 | 496,123,385 |
| 69 | | | | | | | |
| 70 | | | | | | | |
| 71 | **Nuclear Production** | | | | | | |
| 129 | **All - Nuclear** | | | | | | |
| 130 | | | 320 | | Land and Land Rights | 439,822 | 439,822 |
| 131 | | | 320.1 | | Land - Right of Way | 44,622 | 44,622 |
| 132 | | | 321 | | Structures and Improvements | 202,237,760 | 206,141,876 |
| 133 | | | 322 | | Reactor Plant Equipment | 333,424,065 | 335,766,969 |
| 134 | | | 323 | | Turbogenerator Units | 112,785,657 | 114,979,772 |
| 135 | | | 324 | | Accessory Electric Equipment | 56,038,293 | 60,921,349 |
| 136 | | | 324.01 | | Computer Hardware | - | - |
| 137 | | | 324.02 | | Computer Software | 5,397,853 | 13,073,078 |
| 138 | | | 324.03 | | Communication Equipment | 408,257 | 404,583 |
| 139 | | | 325 | | Misc Power Plant Equipment | 70,129,985 | 71,030,834 |
| 140 | | | 326 | | Asset Retirement Costs Nuclear Prod Plant | 12,831,931 | 12,831,931 |
| 141 | **Total Nuclear Production Gross Plant** | | | | | 793,738,244 | 815,634,837 |
| 142 | | | | | | | |
| 143 | | | | | | | |

| | A | B | C | D | E | F | G |
|---|---|---|---|---|---|---|---|
| 1 | **Public Service Company of New Mexico** | | | | | | |
| 2 | **Schedule H-7** | | | | | | |
| 3 | **Depreciation and Amortization Expense** | | | | | | |
| 4 | **Base Period Ending 6/30/2026** | | | | | | |
| 5 | **Test Period Ending 9/30/2028** | | | | | | |
| 6 | Link to WP Plant Lead Sheet | | | | | | |
| 7 | **Base Period data is historical Information from the Company's Books and Records.** | | | | | | |
| 8 | This schedule is sponsored by PNM Witness Gutierrez | | | | | | |
| 9 | Please see the Direct Testimony of PNM Witnesses Gutierrez for discussion of adjustments/changes to the Base Period, Test Period, and Linkage Data. | | | | | Rule 530 Schedule B-3 Column F | Rule 530 Schedule B-3 Column R |
| 10 | **Location** | **Location Number Note 7** | **FERC** | **Loc/FERC** | **FERC Description** | **Base Period Plant in Service Beginning Balance 7/1/2025** | **Base Period Plant in Service Ending Balance 6/30/2026** |
| 144 | **Solar Production** | | | | | | |
| 237 | **All - Solar** | | | | | | |
| 238 | | | 338.01 | | Land & Land Rights | 11,040,948 | 11,040,948 |
| 239 | | | 338.02 | | Structures and Improvements | 268,299 | 268,299 |
| 240 | | | 338.04 | | Solar Panels | 277,545,592 | 277,545,592 |
| 241 | | | 338.05 | | Collector System | 8,264,812 | 8,264,812 |
| 242 | | | 338.07 | | Solar Inverters | - | - |
| 243 | | | 338.08 | | Other Accessory Electrical Equipment | 33,903,100 | 33,903,100 |
| 244 | | | 338.09 | | Computer Hardware | 51,760 | 51,760 |
| 245 | | | 338.10 | | Computer Software | - | - |
| 246 | | | 338.11 | | Communication Equipment | 637,577 | 637,577 |
| 247 | | | 338.12 | | Misc. Power Plant Equipment | 5,228,178 | 5,228,178 |
| 248 | **Total Solar Production Gross Plant** | | | | | 336,940,266 | 336,940,266 |
| 249 | | | | | | | |
| 250 | **Other Production** | | | | | | |
| 251 | | | | | | | |
| 252 | **Other Production - Gas:** | | | | | | |
| 339 | **All - Gas** | | 340 | | Land and Land Rights | 7,079,884 | 7,079,884 |
| 340 | | | 340.1 | | Land - Right of Way | 1,959,313 | 1,959,313 |
| 341 | | | 341 | | Structures and Improvements | 94,104,168 | 95,355,528 |
| 342 | | | 342 | | Fuel Holders, Producers, Accessories | 113,190,800 | 120,435,397 |
| 343 | | | 343 | | Prime Movers | - | - |
| 344 | | | 344 | | Generators | 260,760,958 | 257,177,775 |
| 345 | | | 345 | | Accessory Electric Equipment | 24,022,366 | 24,125,557 |
| 346 | | | 345.01 | | Computer Hardware | 53,885 | 53,885 |
| 347 | | | 345.02 | | Computer Software | 117,298 | 60,931 |
| 348 | | | 345.03 | | Communication Equipment | 38,862 | 38,862 |
| 349 | | | 346 | | Misc Power Plant Equipment | 46,524,239 | 46,295,516 |
| 350 | | | 347 | | Asset Retirement Costs - Other Production | 3,590,447 | 7,008,573 |
| 351 | **Total Other Production Plant - Gas** | | | | | 551,442,220 | 559,591,222 |
| 352 | | | | | | | |
| 353 | | | | | | | |
| 354 | **Total Other Production Gross Plant** | | | | | **551,442,220** | **559,591,222** |
| 355 | | | | | | | |
| 356 | **Total Gross Plant Production** | | | | | **2,170,094,845** | **2,208,289,710** |
| 357 | | | | | | | |

| | A | B | C | D | E | F | G |
|---|---|---|---|---|---|---|---|
| 1 | **Public Service Company of New Mexico** | | | | | | |
| 2 | **Schedule H-7** | | | | | | |
| 3 | **Depreciation and Amortization Expense** | | | | | | |
| 4 | **Base Period Ending 6/30/2026** | | | | | | |
| 5 | **Test Period Ending 9/30/2028** | | | | | | |
| 6 | Link to WP Plant Lead Sheet | | | | | | |
| 7 | **Base Period data is historical Information from the Company's Books and Records.** | | | | | | |
| 8 | This schedule is sponsored by PNM Witness Gutierrez | | | | | | |
| 9 | Please see the Direct Testimony of PNM Witnesses Gutierrez for discussion of adjustments/changes to the Base Period, Test Period, and Linkage Data. | | | | | Rule 530 Schedule B-3 Column F | Rule 530 Schedule B-3 Column R |
| 10 | **Location** | **Location Number Note 7** | **FERC** | **Loc/FERC** | **FERC Description** | **Base Period Plant in Service Beginning Balance 7/1/2025** | **Base Period Plant in Service Ending Balance 6/30/2026** |
| 358 | | | | | | | |
| 359 | **Total Gross Energy Storage Plant** | | | | | | |
| 386 | **All - Energy Storage** | | 387.01 | 387.01 | Land & Land Rights | - | - |
| 387 | | | 387.02 | 387.02 | Structures & Improvements | 667,798 | 23,176,806 |
| 388 | | | 387.03 | 387.03 | Energy Storage Equipment | 19,475,685 | 33,059,123 |
| 389 | | | 387.05 | 387.05 | Collector System | 4,827,171 | 25,624,069 |
| 390 | | | 387.06 | 387.06 | Generator Step-Up Transformers (GSU) | 1,712,696 | 59,151,201 |
| 391 | | | 387.07 | 387.07 | Inverters | - | - |
| 392 | | | 387.08 | 387.08 | Computer Hardware | - | 5,348,140 |
| 393 | | | 387.09 | 387.09 | Computer Software | 605,006 | 965,150 |
| 394 | | | 387.10 | 387.10 | Communication Equipment | 545,603 | 1,233,478 |
| 395 | | | 387.11 | 387.11 | Misc. Energy Storage Equipment | 4,531,065 | 7,837,251 |
| 396 | | | 387.12 | 387.12 | Asset Retirement Costs for Energy Storage | - | - |
| 397 | **Total Gross Battery Storage Plant** | | | | | 32,365,024 | 156,395,217 |
| 398 | | | | | | | |
| 399 | | | | | | | |
| 400 | **Gross Plant Transmission Plant** | | | | | | |
| 401 | | | | | | | |
| 453 | **All - Transmission** | | | | | | |
| 454 | | | 350 | | Land and Land Rights | 80,575,716 | 81,554,885 |
| 455 | | | 350.1 | | Land - Right of Way | 53,208,308 | 53,100,094 |
| 456 | | | 351.01 | | Computer Hardware | 14,315,535 | 17,356,153 |
| 457 | | | 351.02 | | Computer Software | 8,257,662 | 9,284,877 |
| 458 | | | 351.03 | | Communication Equipment | 42,848,934 | 47,247,395 |
| 459 | | | 352 | | Structures and Improvements | 216,672,372 | 247,003,049 |
| 460 | | | 353 | | Station Equipment | 907,450,615 | 962,423,537 |
| 461 | | | 353.1 | | Station Equipment - Step-up Xfmr and Aux | 12,193,036 | 12,193,036 |
| 462 | | | 354 | | Towers and Fixtures | 65,791,175 | 64,316,194 |
| 463 | | | 355 | | Poles and Fixtures | 542,976,420 | 558,236,602 |
| 464 | | | 356 | | Overhead Conductors and Devices | 227,346,768 | 233,495,347 |
| 465 | | | 357 | | Underground Conduit | 185,394 | 185,394 |
| 466 | | | 359 | | Roads and Trails | 9,800,590 | 9,800,590 |
| 467 | **Total Gross Plant Transmission Plant** | | | | | 2,181,622,525 | 2,296,197,155 |
| 468 | | | | | | | |
| 469 | | | | | | | |

| | A | B | C | D | E | F | G |
|---|---|---|---|---|---|---|---|
| 1 | **Public Service Company of New Mexico** | | | | | | |
| 2 | **Schedule H-7** | | | | | | |
| 3 | **Depreciation and Amortization Expense** | | | | | | |
| 4 | **Base Period Ending 6/30/2026** | | | | | | |
| 5 | **Test Period Ending 9/30/2028** | | | | | | |
| 6 | Link to WP Plant Lead Sheet | | | | | | |
| 7 | **Base Period data is historical Information from the Company's Books and Records.** | | | | | | |
| 8 | This schedule is sponsored by PNM Witness Gutierrez | | | | | | |
| 9 | Please see the Direct Testimony of PNM Witnesses Gutierrez for discussion of adjustments/changes to the Base Period, Test Period, and Linkage Data. | | | | | Rule 530 Schedule B-3 Column F | Rule 530 Schedule B-3 Column R |
| 10 | **Location** | **Location Number Note 7** | **FERC** | **Loc/FERC** | **FERC Description** | **Base Period Plant in Service Beginning Balance 7/1/2025** | **Base Period Plant in Service Ending Balance 6/30/2026** |
| 470 | | | | | | | |
| 471 | **Gross Plant Distribution Plant** | | | | | | |
| 665 | **All - Distribution** | | | | | | |
| 666 | | | 360 | | Land and Land Rights | 10,357,185 | 10,417,584 |
| 667 | | | 360.1 | | Land - Right of Way | 2,121,278 | 2,121,278 |
| 668 | | | 361 | | Structures and Improvements | 43,327,822 | 72,959,760 |
| 669 | | | 362 | | Station Equipment | 320,802,895 | 331,313,566 |
| 670 | | | 363.01 | | Computer Hardware | 3,220,875 | 7,679,772 |
| 671 | | | 363.02 | | Computer Software | 28,948,742 | 52,092,734 |
| 672 | | | 363.03 | | Communication Equipment | 14,864,799 | 18,438,804 |
| 673 | | | 364 | | Poles, Towers and Fixtures | 402,400,674 | 470,868,364 |
| 674 | | | 365 | | Overhead Conductors and Devices | 272,586,510 | 296,134,853 |
| 675 | | | 366 | | Underground Conduit | 177,783,509 | 198,451,082 |
| 676 | | | 367 | | Underground Conductors and Devices | 425,418,098 | 478,841,595 |
| 677 | | | 368 | | Line Transformers | 279,368,276 | 292,030,680 |
| 678 | | | 369 | | Services | 98,148,074 | 103,021,939 |
| 679 | | | 369.1 | | Services - Underground | 161,719,390 | 178,879,452 |
| 680 | | | 370 | | Meters | 64,538,791 | 67,541,744 |
| 681 | | | 370.4 | | Meters - Grid Mod | - | 210,668 |
| 682 | | | 371 | | Installations on Customers' Premises | 9,151,530 | 9,151,530 |
| 683 | | | 371.1 | | Leased Flood Lighting | 307,353 | 307,353 |
| 684 | | | 373 | | Street Lighting and Signal Systems | 28,121,698 | 31,058,860 |
| 685 | | | 374 | | Asset Retirement Costs - Distribution | 14,202 | - |
| 686 | **Total Gross Plant Distribution Plant** | | | | | 2,343,201,699 | 2,621,521,617 |
| 687 | | | | | | | |

| | A | B | C | D | E | F | G |
|---|---|---|---|---|---|---|---|
| 1 | **Public Service Company of New Mexico** | | | | | | |
| 2 | **Schedule H-7** | | | | | | |
| 3 | **Depreciation and Amortization Expense** | | | | | | |
| 4 | **Base Period Ending 6/30/2026** | | | | | | |
| 5 | **Test Period Ending 9/30/2028** | | | | | | |
| 6 | Link to WP Plant Lead Sheet | | | | | | |
| 7 | **Base Period data is historical Information from the Company's Books and Records.** | | | | | | |
| 8 | This schedule is sponsored by PNM Witness Gutierrez | | | | | | |
| 9 | Please see the Direct Testimony of PNM Witnesses Gutierrez for discussion of adjustments/changes to the Base Period, Test Period, and Linkage Data. | | | | | Rule 530 Schedule B-3 Column F | Rule 530 Schedule B-3 Column R |
| 10 | **Location** | **Location Number Note 7** | **FERC** | **Loc/FERC** | **FERC Description** | **Base Period Plant in Service Beginning Balance 7/1/2025** | **Base Period Plant in Service Ending Balance 6/30/2026** |
| 688 | | | | | | | |
| 689 | **Gross Plant G&I Plant (303,389-399)** | | | | | | |
| 719 | **Total General & Intangible Plant** | | | | | | |
| 720 | | | 303 | | Miscellaneous Intangible Plant | - | - |
| 721 | | | 389 | | Land and Land Rights | 1,937,568 | 1,937,568 |
| 722 | | | 390 | | Structures and Improvements | 75,244,024 | 74,004,202 |
| 723 | | | 390.1 | | Bulk Power Office Building Remodeling | 5,904,067 | 5,904,067 |
| 724 | | | 390.2 | | Bulk Power Office Building | 5,965,530 | 5,945,142 |
| 725 | | | 391 | | Office Furniture and Equipment | 5,015,474 | 4,955,173 |
| 726 | | | 391.1 | | Office Furniture and Equipment - PC System | - | - |
| 727 | | | 391.2 | | Office Furniture and Equipment - PC's | - | - |
| 728 | | | 391.3 | | Computer Hardware | - | - |
| 729 | | | 391.5 | | Computer Hardware - Solar | - | - |
| 730 | | | 391.7 | | Computer Hardware | - | - |
| 731 | | | 392 | | Transportation Equipment - Light | 4,234,699 | 4,426,263 |
| 732 | | | 392.1 | | Transportation Equipment - Heavy | 5,035,647 | 5,035,647 |
| 733 | | | 392.2 | | Transportation Equipment - Trailers | 8,522,596 | 8,516,240 |
| 734 | | | 392.4 | | Transportation Equipment - Leaseback | - | - |
| 735 | | | 393 | | Stores Equipment | 97,939 | 97,939 |
| 736 | | | 394 | | Tools, Shop & Garage Equipment | 19,891,159 | 20,059,732 |
| 737 | | | 395 | | Laboratory Equipment | 206,265 | 206,265 |
| 738 | | | 396 | | Power Operated Equipment | 7,321,724 | 7,409,871 |
| 739 | | | 397.01 | | Computer Hardware | 1,878,678 | 2,386,424 |
| 740 | | | 397.02 | | Computer Software | 26,238,792 | 35,351,749 |
| 741 | | | 397.03 | | Communication Equipment | (86) | - |
| 742 | | | 398 | | Miscellaneous Equipment | 1,778,437 | 1,777,493 |
| 743 | | | 399.1 | | ARO General Plant-1 | 19,473 | 19,473 |
| 744 | **Total Gross Plant G&I Plant - PNM** | | | | | 169,291,985 | 178,033,247 |
| 745 | | | | | | | |
| 746 | **Total Electric Plant In Service** | | 101/106 | | | 6,896,576,079 | 7,460,436,946 |
| 747 | | | | | | | |
| 748 | **Electric Plant Purchased** | | 102 | | | - | - |
| 749 | | | | | | | |
| 750 | **Electric Plant Acquisition Adjustment** | | | | Acq. Adj. - Palo Verde Unit 1&2 (Drexel) | - | - |
| 751 | | | | | Acq. Adj. - Palo Verde Unit 2 (First Chicago) | 17,195,774 | 16,363,721 |
| 752 | | | | | Acq. Adj. - (EIP) | 292,984 | - |
| 753 | **Electric Plant Acquisition Adjustment** | | 114 | | | 17,488,758 | 16,363,721 |
| 754 | | | | | | | |
| 755 | **Total Electric Plant** | | | | | 6,914,064,837 | 7,476,800,667 |
| 756 | | | | | | | |

| | A | B | C | D | E | F | G |
|---|---|---|---|---|---|---|---|
| 1 | **Public Service Company of New Mexico** | | | | | | |
| 2 | **Schedule H-7** | | | | | | |
| 3 | **Depreciation and Amortization Expense** | | | | | | |
| 4 | **Base Period Ending 6/30/2026** | | | | | | |
| 5 | **Test Period Ending 9/30/2028** | | | | | | |
| 6 | Link to WP Plant Lead Sheet | | | | | | |
| 7 | **Base Period data is historical Information from the Company's Books and Records.** | | | | | | |
| 8 | This schedule is sponsored by PNM Witness Gutierrez | | | | | | |
| 9 | Please see the Direct Testimony of PNM Witnesses Gutierrez for discussion of adjustments/changes to the Base Period, Test Period, and Linkage Data. | | | | | Rule 530 Schedule B-3 Column F | Rule 530 Schedule B-3 Column R |
| 10 | **Location** | **Location Number Note 7** | **FERC** | **Loc/FERC** | **FERC Description** | **Base Period Plant in Service Beginning Balance 7/1/2025** | **Base Period Plant in Service Ending Balance 6/30/2026** |
| 757 | | | | | | | |
| 758 | **Corporate Unallocated** | 900 | 303 | 900303 | Miscellaneous Intangible Plant | - | - |
| 759 | | 900 | 389 | 900389 | Land and Land Rights | 5,133,327 | 5,133,327 |
| 760 | | 900 | 390 | 900390 | Structures and Improvements | 64,774,362 | 72,033,942 |
| 761 | | 900 | 390.1 | 900390.1 | Bulk Power Office Building Remodeling | - | - |
| 762 | | 900 | 390.2 | 900390.2 | Bulk Power Office Building | - | - |
| 763 | | 900 | 391 | 900391 | Office Furniture and Equipment | 871,391 | 1,016,114 |
| 764 | | 900 | 391.1 | 900391.1 | Office Furniture and Equipment - PC System | - | - |
| 765 | | 900 | 391.2 | 900391.2 | Office Furniture and Equipment - PC's | - | - |
| 766 | | 900 | 391.3 | 900391.3 | Computer Hardware | - | - |
| 767 | | 900 | 391.5 | 900391.5 | Computer Hardware - Solar | - | - |
| 768 | | 900 | 391.7 | 900391.7 | Computer Hardware | - | - |
| 769 | | 900 | 392 | 900392 | Transportation Equipment - Light | 318,774 | 350,330 |
| 770 | | 900 | 392.1 | 900392.1 | Transportation Equipment - Heavy | 52,320 | 52,320 |
| 771 | | 900 | 392.2 | 900392.2 | Transportation Equipment - Trailers | 10,272 | 10,272 |
| 772 | | 900 | 392.4 | 900392.4 | Transportation Equipment - Leaseback | - | - |
| 773 | | 900 | 393 | 900393 | Stores Equipment | - | - |
| 774 | | 900 | 394 | 900394 | Tools, Shop & Garage Equipment | 582,133 | 592,267 |
| 775 | | 900 | 395 | 900395 | Laboratory Equipment | - | - |
| 776 | | 900 | 396 | 900396 | Power Operated Equipment | 26,134 | 26,134 |
| 777 | | 900 | 397 | 900397 | Communication Equipment | - | - |
| 778 | | 900 | 397.01 | 900397.01 | Computer Hardware | 45,119,422 | 38,267,382 |
| 779 | | 900 | 397.02 | 900397.02 | Computer Software | 164,917,035 | 204,629,139 |
| 780 | | 900 | 397.03 | 900397.03 | Communication Equipment | 5,095,511 | 5,097,570 |
| 781 | | 900 | 397.2 | 900397.2 | Communication Equipment | - | - |
| 782 | | 900 | 397.3 | 900397.3 | Communication Equipment | - | - |
| 783 | | 900 | 398 | 900398 | Miscellaneous Equipment | - | - |
| 784 | | 900 | 399.1 | 900399.1 | ARO General Plant-1 | - | - |
| 785 | | | | | | | |
| 786 | **Total Gross Plant Corporate Plant** | | | | | 286,900,681 | 327,208,799 |
| 787 | | | | | | | |
| 788 | **Total Electric Plant In Service** | | 101/106 | | | 7,183,476,760 | 7,787,645,745 |
| 789 | | | | | | | |
| 790 | **Electric Plant Purchased** | | 102 | | | - | - |
| 791 | | | | | | | |
| 792 | **Electric Plant Acq. Adj.** | | 114 | | | 17,488,758 | 16,363,721 |
| 793 | | | | | | | |
| 794 | **Total Electric Plant** | | | | | 7,200,965,518 | 7,804,009,466 |

| | A | B | C | D | E | H | I | J |
|---|---|---|---|---|---|---|---|---|
| 1 | **Public Service Company of New Mexico** | | | | | | | |
| 2 | **Schedule H-7** | | | | | | | |
| 3 | **Depreciation and Amortization Expense** | | | | | | | |
| 4 | **Base Period Ending 6/30/2026** | | | | | | | |
| 5 | **Test Period Ending 9/30/2028** | | | | | | | |
| 6 | Link to WP Plant Lead Sheet | | | | | | | |
| 7 | **Base Period data is historical Information from the Company's Books and Records.** | | | | | | | |
| 8 | This schedule is sponsored by PNM Witness Gutierrez | | | | | | | |
| 9 | Please see the Direct Testimony of PNM Witnesses Gutierrez for discussion of adjustments/changes to the Base Period, Test Period, and Linkage Data. | | | | | (Column F + Column G)/2 | Column J/Column H | Rule 530 Schedule C-1 Column G |
| 10 | **Location** | **Location Number Note 7** | **FERC** | **Loc/FERC** | **FERC Description** | **Average Base Period Balance** | **Average Base Period Depreciation & Amortization Rate** | **Base Period Expense** |
| 11 | | | | | | | | |
| 12 | **Gross Plant Production Plant** | | | | | | | |
| 13 | **Steam Production** | | | | | | | |
| 56 | **All - Steam** | | | | | | | |
| 57 | | | 310 | | Land and Land Rights | 618,487 | | - |
| 58 | | | 310.1 | | Land Right of Way | 25,958 | | 468 |
| 59 | | | 311 | | Structures & Improvements | 34,044,707 | | 721,814 |
| 60 | | | 312 | | Boiler Plant Equipment | 311,783,127 | | 6,673,698 |
| 61 | | | 314 | | Turbogenerator Units | 74,581,202 | | 2,709,978 |
| 62 | | | 315 | | Accessory Electric Equipment | 25,389,076 | | 691,917 |
| 63 | | | 315.01 | | Computer Hardware | - | | - |
| 64 | | | 315.02 | | Computer Software | 1,354,315 | | 275,724 |
| 65 | | | 315.03 | | Communication Equipment | 328,366 | | 22,547 |
| 66 | | | 316 | | Misc Power Plant Equipment | 35,078,047 | | 1,057,164 |
| 67 | | | 317 | | Asset Retirement Costs - Steam | 8,845,465 | | 106,713 |
| 68 | **Total Steam Production Gross Plant** | | | | | 492,048,750 | 2.49% | 12,260,022 |
| 69 | | | | | | | | |
| 70 | | | | | | | | |
| 71 | **Nuclear Production** | | | | | | | |
| 129 | **All - Nuclear** | | | | | | | |
| 130 | | | 320 | | Land and Land Rights | 439,822 | | - |
| 131 | | | 320.1 | | Land - Right of Way | 44,622 | | 668 |
| 132 | | | 321 | | Structures and Improvements | 204,189,818 | | 4,475,377 |
| 133 | | | 322 | | Reactor Plant Equipment | 334,595,517 | | 7,753,988 |
| 134 | | | 323 | | Turbogenerator Units | 113,882,714 | | 2,744,308 |
| 135 | | | 324 | | Accessory Electric Equipment | 58,479,821 | | 1,008,219 |
| 136 | | | 324.01 | | Computer Hardware | - | | - |
| 137 | | | 324.02 | | Computer Software | 9,235,466 | | 1,964,072 |
| 138 | | | 324.03 | | Communication Equipment | 406,420 | | 28,828 |
| 139 | | | 325 | | Misc Power Plant Equipment | 70,580,410 | | 1,832,971 |
| 140 | | | 326 | | Asset Retirement Costs Nuclear Prod Plant | 12,831,931 | | 134,219 |
| 141 | **Total Nuclear Production Gross Plant** | | | | | 804,686,540 | 2.48% | 19,942,648 |
| 142 | | | | | | | | |
| 143 | | | | | | | | |

| | A | B | C | D | E | H | I | J |
|---|---|---|---|---|---|---|---|---|
| 1 | **Public Service Company of New Mexico** | | | | | | | |
| 2 | **Schedule H-7** | | | | | | | |
| 3 | **Depreciation and Amortization Expense** | | | | | | | |
| 4 | **Base Period Ending 6/30/2026** | | | | | | | |
| 5 | **Test Period Ending 9/30/2028** | | | | | | | |
| 6 | Link to WP Plant Lead Sheet | | | | | | | |
| 7 | **Base Period data is historical Information from the Company's Books and Records.** | | | | | | | |
| 8 | This schedule is sponsored by PNM Witness Gutierrez | | | | | | | |
| 9 | Please see the Direct Testimony of PNM Witnesses Gutierrez for discussion of adjustments/changes to the Base Period, Test Period, and Linkage Data. | | | | | (Column F + Column G)/2 | Column J/Column H | Rule 530 Schedule C-1 Column G |
| 10 | **Location** | **Location Number Note 7** | **FERC** | **Loc/FERC** | **FERC Description** | **Average Base Period Balance** | **Average Base Period Depreciation & Amortization Rate** | **Base Period Expense** |
| 144 | **Solar Production** | | | | | | | |
| 237 | **All - Solar** | | | | | | | |
| 238 | | | 338.01 | | Land & Land Rights | 11,040,948 | - | - |
| 239 | | | 338.02 | | Structures and Improvements | 268,299 | - | 9,133 |
| 240 | | | 338.04 | | Solar Panels | 277,545,592 | - | 9,265,030 |
| 241 | | | 338.05 | | Collector System | 8,264,812 | - | 286,790 |
| 242 | | | 338.07 | | Solar Inverters | - | - | - |
| 243 | | | 338.08 | | Other Accessory Electrical Equipment | 33,903,100 | - | 1,141,531 |
| 244 | | | 338.09 | | Computer Hardware | 51,760 | - | 10,352 |
| 245 | | | 338.10 | | Computer Software | - | - | - |
| 246 | | | 338.11 | | Communication Equipment | 637,577 | - | 72,579 |
| 247 | | | 338.12 | | Misc. Power Plant Equipment | 5,228,178 | - | 137,583 |
| 248 | **Total Solar Production Gross Plant** | | | | | 336,940,266 | 3.24% | 10,922,997 |
| 249 | | | | | | | | |
| 250 | **Other Production** | | | | | | | |
| 251 | | | | | | | | |
| 252 | **Other Production - Gas:** | | | | | | | |
| 339 | **All - Gas** | | 340 | | Land and Land Rights | 7,079,884 | | - |
| 340 | | | 340.1 | | Land - Right of Way | 1,959,313 | | 70,625 |
| 341 | | | 341 | | Structures and Improvements | 94,729,848 | | 2,939,782 |
| 342 | | | 342 | | Fuel Holders, Producers, Accessories | 116,813,099 | | 3,849,989 |
| 343 | | | 343 | | Prime Movers | - | | - |
| 344 | | | 344 | | Generators | 258,969,367 | | 8,929,313 |
| 345 | | | 345 | | Accessory Electric Equipment | 24,073,962 | | 1,185,610 |
| 346 | | | 345.01 | | Computer Hardware | 53,885 | | - |
| 347 | | | 345.02 | | Computer Software | 89,115 | | 5,952 |
| 348 | | | 345.03 | | Communication Equipment | 38,862 | | 2,591 |
| 349 | | | 346 | | Misc Power Plant Equipment | 46,409,877 | | 1,508,548 |
| 350 | | | 347 | | Asset Retirement Costs - Other Production | 5,299,510 | | 222,304 |
| 351 | **Total Other Production Plant - Gas** | | | | | 555,516,721 | 3.37% | 18,714,714 |
| 352 | | | | | | | | |
| 353 | | | | | | | | |
| 354 | **Total Other Production Gross Plant** | | | | | **555,516,721** | 3.37% | **18,714,714** |
| 355 | | | | | | | | |
| 356 | **Total Gross Plant Production** | | | | | **2,189,192,278** | 2.82% | **61,840,381** |
| 357 | | | | | | | | |

| | A | B | C | D | E | H | I | J |
|---|---|---|---|---|---|---|---|---|
| 1 | **Public Service Company of New Mexico** | | | | | | | |
| 2 | **Schedule H-7** | | | | | | | |
| 3 | **Depreciation and Amortization Expense** | | | | | | | |
| 4 | **Base Period Ending 6/30/2026** | | | | | | | |
| 5 | **Test Period Ending 9/30/2028** | | | | | | | |
| 6 | Link to WP Plant Lead Sheet | | | | | | | |
| 7 | **Base Period data is historical Information from the Company's Books and Records.** | | | | | | | |
| 8 | This schedule is sponsored by PNM Witness Gutierrez | | | | | | | |
| 9 | Please see the Direct Testimony of PNM Witnesses Gutierrez for discussion of adjustments/changes to the Base Period, Test Period, and Linkage Data. | | | | | (Column F + Column G)/2 | Column J/Column H | Rule 530 Schedule C-1 Column G |
| 10 | **Location** | **Location Number Note 7** | **FERC** | **Loc/FERC** | **FERC Description** | **Average Base Period Balance** | **Average Base Period Depreciation & Amortization Rate** | **Base Period Expense** |
| 358 | | | | | | | | |
| 359 | **Total Gross Energy Storage Plant** | | | | | | | |
| 386 | **All - Energy Storage** | | 387.01 | 387.01 | Land & Land Rights | - | | - |
| 387 | | | 387.02 | 387.02 | Structures & Improvements | 11,922,302 | | 20,679 |
| 388 | | | 387.03 | 387.03 | Energy Storage Equipment | 26,267,404 | | 517,139 |
| 389 | | | 387.05 | 387.05 | Collector System | 15,225,620 | | 149,863 |
| 390 | | | 387.06 | 387.06 | Generator Step-Up Transformers (GSU) | 30,431,948 | | 53,183 |
| 391 | | | 387.07 | 387.07 | Inverters | - | | - |
| 392 | | | 387.08 | 387.08 | Computer Hardware | 2,674,070 | | - |
| 393 | | | 387.09 | 387.09 | Computer Software | 785,078 | | 127,003 |
| 394 | | | 387.10 | 387.10 | Communication Equipment | 889,540 | | 16,895 |
| 395 | | | 387.11 | 387.11 | Misc. Energy Storage Equipment | 6,184,158 | | 151,323 |
| 396 | | | 387.12 | 387.12 | Asset Retirement Costs for Energy Storage | - | | - |
| 397 | **Total Gross Battery Storage Plant** | | | | | 94,380,120 | 1.10% | 1,036,086 |
| 398 | | | | | | | | |
| 399 | | | | | | | | |
| 400 | **Gross Plant Transmission Plant** | | | | | | | |
| 401 | | | | | | | | |
| 453 | **All - Transmission** | | | | | | | |
| 454 | | | 350 | | Land and Land Rights | 81,065,300 | | 1,335,562 |
| 455 | | | 350.1 | | Land - Right of Way | 53,154,201 | | 506,177 |
| 456 | | | 351.01 | | Computer Hardware | 15,835,844 | | 3,905,795 |
| 457 | | | 351.02 | | Computer Software | 8,771,270 | | 1,667,933 |
| 458 | | | 351.03 | | Communication Equipment | 45,048,164 | | 3,117,999 |
| 459 | | | 352 | | Structures and Improvements | 231,837,711 | | 4,587,991 |
| 460 | | | 353 | | Station Equipment | 934,937,076 | | 26,249,243 |
| 461 | | | 353.1 | | Station Equipment - Step-up Xfmr and Aux | 12,193,036 | | 325,394 |
| 462 | | | 354 | | Towers and Fixtures | 65,053,685 | | 809,817 |
| 463 | | | 355 | | Poles and Fixtures | 550,606,511 | | 17,289,316 |
| 464 | | | 356 | | Overhead Conductors and Devices | 230,421,058 | | 5,714,482 |
| 465 | | | 357 | | Underground Conduit | 185,394 | | 3,525 |
| 466 | | | 359 | | Roads and Trails | 9,800,590 | | 143,706 |
| 467 | **Total Gross Plant Transmission Plant** | | | | | 2,238,909,840 | 2.93% | 65,656,940 |
| 468 | | | | | | | | - |
| 469 | | | | | | | | |

| | A | B | C | D | E | H | I | J |
|---|---|---|---|---|---|---|---|---|
| 1 | **Public Service Company of New Mexico** | | | | | | | |
| 2 | **Schedule H-7** | | | | | | | |
| 3 | **Depreciation and Amortization Expense** | | | | | | | |
| 4 | **Base Period Ending 6/30/2026** | | | | | | | |
| 5 | **Test Period Ending 9/30/2028** | | | | | | | |
| 6 | Link to WP Plant Lead Sheet | | | | | | | |
| 7 | **Base Period data is historical Information from the Company's Books and Records.** | | | | | | | |
| 8 | This schedule is sponsored by PNM Witness Gutierrez | | | | | | | |
| 9 | Please see the Direct Testimony of PNM Witnesses Gutierrez for discussion of adjustments/changes to the Base Period, Test Period, and Linkage Data. | | | | | (Column F + Column G)/2 | Column J/Column H | Rule 530 Schedule C-1 Column G |
| 10 | **Location** | **Location Number Note 7** | **FERC** | **Loc/FERC** | **FERC Description** | **Average Base Period Balance** | **Average Base Period Depreciation & Amortization Rate** | **Base Period Expense** |
| 470 | | | | | | | | |
| 471 | **Gross Plant Distribution Plant** | | | | | | | |
| 665 | **All - Distribution** | | | | | | | |
| 666 | | | 360 | | Land and Land Rights | 10,387,385 | | - |
| 667 | | | 360.1 | | Land - Right of Way | 2,121,278 | | 19,092 |
| 668 | | | 361 | | Structures and Improvements | 58,143,791 | | 1,014,221 |
| 669 | | | 362 | | Station Equipment | 326,058,230 | | 8,124,435 |
| 670 | | | 363.01 | | Computer Hardware | 5,450,324 | | 1,030,083 |
| 671 | | | 363.02 | | Computer Software | 40,520,738 | | 8,679,242 |
| 672 | | | 363.03 | | Communication Equipment | 16,651,801 | | 1,150,426 |
| 673 | | | 364 | | Poles, Towers and Fixtures | 436,634,519 | | 17,979,858 |
| 674 | | | 365 | | Overhead Conductors and Devices | 284,360,681 | | 11,078,472 |
| 675 | | | 366 | | Underground Conduit | 188,117,295 | | 3,577,347 |
| 676 | | | 367 | | Underground Conductors and Devices | 452,129,846 | | 10,184,065 |
| 677 | | | 368 | | Line Transformers | 285,699,478 | | 6,830,287 |
| 678 | | | 369 | | Services | 100,585,007 | | 3,105,679 |
| 679 | | | 369.1 | | Services - Underground | 170,299,421 | | 5,119,894 |
| 680 | | | 370 | | Meters | 66,040,268 | | 3,143,061 |
| 681 | | | 370.4 | | Meters - Grid Mod | 105,334 | | 2,633 |
| 682 | | | 371 | | Installations on Customers' Premises | 9,151,530 | | - |
| 683 | | | 371.1 | | Leased Flood Lighting | 307,353 | | - |
| 684 | | | 373 | | Street Lighting and Signal Systems | 29,590,279 | | 845,058 |
| 685 | | | 374 | | Asset Retirement Costs - Distribution | 7,101 | | 126 |
| 686 | **Total Gross Plant Distribution Plant** | | | | | 2,482,361,658 | 3.30% | 81,883,979 |
| 687 | | | | | | | | |

| | A | B | C | D | E | H | I | J |
|---|---|---|---|---|---|---|---|---|
| 1 | **Public Service Company of New Mexico** | | | | | | | |
| 2 | **Schedule H-7** | | | | | | | |
| 3 | **Depreciation and Amortization Expense** | | | | | | | |
| 4 | **Base Period Ending 6/30/2026** | | | | | | | |
| 5 | **Test Period Ending 9/30/2028** | | | | | | | |
| 6 | Link to WP Plant Lead Sheet | | | | | | | |
| 7 | **Base Period data is historical Information from the Company's Books and Records.** | | | | | | | |
| 8 | This schedule is sponsored by PNM Witness Gutierrez | | | | | | | |
| 9 | Please see the Direct Testimony of PNM Witnesses Gutierrez for discussion of adjustments/changes to the Base Period, Test Period, and Linkage Data. | | | | | (Column F + Column G)/2 | Column J/Column H | Rule 530 Schedule C-1 Column G |
| 10 | **Location** | **Location Number Note 7** | **FERC** | **Loc/FERC** | **FERC Description** | **Average Base Period Balance** | **Average Base Period Depreciation & Amortization Rate** | **Base Period Expense** |
| 688 | | | | | | | | |
| 689 | **Gross Plant G&I Plant (303,389-399)** | | | | | | | |
| 719 | **Total General & Intangible Plant** | | | | | | | |
| 720 | | | 303 | | Miscellaneous Intangible Plant | - | | - |
| 721 | | | 389 | | Land and Land Rights | 1,937,568 | | - |
| 722 | | | 390 | | Structures and Improvements | 74,624,113 | | 1,394,633 |
| 723 | | | 390.1 | | Bulk Power Office Building Remodeling | 5,904,067 | | 11,330 |
| 724 | | | 390.2 | | Bulk Power Office Building | 5,955,336 | | - |
| 725 | | | 391 | | Office Furniture and Equipment | 4,985,323 | | 271,396 |
| 726 | | | 391.1 | | Office Furniture and Equipment - PC System | - | | - |
| 727 | | | 391.2 | | Office Furniture and Equipment - PC's | - | | - |
| 728 | | | 391.3 | | Computer Hardware | - | | - |
| 729 | | | 391.5 | | Computer Hardware - Solar | - | | - |
| 730 | | | 391.7 | | Computer Hardware | - | | - |
| 731 | | | 392 | | Transportation Equipment - Light | 4,330,481 | | 220,314 |
| 732 | | | 392.1 | | Transportation Equipment - Heavy | 5,035,647 | | 174,476 |
| 733 | | | 392.2 | | Transportation Equipment - Trailers | 8,519,418 | | 284,179 |
| 734 | | | 392.4 | | Transportation Equipment - Leaseback | - | | - |
| 735 | | | 393 | | Stores Equipment | 97,939 | | 4,045 |
| 736 | | | 394 | | Tools, Shop & Garage Equipment | 19,975,446 | | 947,274 |
| 737 | | | 395 | | Laboratory Equipment | 206,265 | | 21,244 |
| 738 | | | 396 | | Power Operated Equipment | 7,365,797 | | 182,100 |
| 739 | | | 397.01 | | Computer Hardware | 2,132,551 | | 295,938 |
| 740 | | | 397.02 | | Computer Software | 30,795,270 | | 6,026,954 |
| 741 | | | 397.03 | | Communication Equipment | (43) | | (0) |
| 742 | | | 398 | | Miscellaneous Equipment | 1,777,965 | | 67,811 |
| 743 | | | 399.1 | | ARO General Plant-1 | 19,473 | | 313 |
| 744 | **Total Gross Plant G&I Plant - PNM** | | | | | 173,662,616 | 5.70% | 9,902,007 |
| 745 | | | | | | | | |
| 746 | **Total Electric Plant In Service** | | 101/106 | | | 7,178,506,513 | 3.07% | 220,319,393 |
| 747 | | | | | | | | |
| 748 | **Electric Plant Purchased** | | 102 | | | - | - | - |
| 749 | | | | | | | | |
| 750 | **Electric Plant Acquisition Adjustment** | | | | Acq. Adj. - Palo Verde Unit 1&2 (Drexel) | - | | - |
| 751 | | | | | Acq. Adj. - Palo Verde Unit 2 (First Chicago) | 16,779,747 | | 832,053 |
| 752 | | | | | Acq. Adj. - (EIP) | 146,492 | | 292,984 |
| 753 | **Electric Plant Acquisition Adjustment** | | 114 | | | 16,926,239 | 6.65% | 1,125,037 |
| 754 | | | | | | | | |
| 755 | **Total Electric Plant** | | | | | 7,195,432,752 | 3.08% | 221,444,430 |
| 756 | | | | | | | | |

| | A | B | C | D | E | H | I | J |
|---|---|---|---|---|---|---|---|---|
| 1 | **Public Service Company of New Mexico** | | | | | | | |
| 2 | **Schedule H-7** | | | | | | | |
| 3 | **Depreciation and Amortization Expense** | | | | | | | |
| 4 | **Base Period Ending 6/30/2026** | | | | | | | |
| 5 | **Test Period Ending 9/30/2028** | | | | | | | |
| 6 | Link to WP Plant Lead Sheet | | | | | | | |
| 7 | **Base Period data is historical Information from the Company's Books and Records.** | | | | | | | |
| 8 | This schedule is sponsored by PNM Witness Gutierrez | | | | | | | |
| 9 | Please see the Direct Testimony of PNM Witnesses Gutierrez for discussion of adjustments/changes to the Base Period, Test Period, and Linkage Data. | | | | | (Column F + Column G)/2 | Column J/Column H | Rule 530 Schedule C-1 Column G |
| 10 | **Location** | **Location Number Note 7** | **FERC** | **Loc/FERC** | **FERC Description** | **Average Base Period Balance** | **Average Base Period Depreciation & Amortization Rate** | **Base Period Expense** |
| 757 | | | | | | | | |
| 758 | **Corporate Unallocated** | 900 | 303 | 900303 | Miscellaneous Intangible Plant | - | | - |
| 759 | | 900 | 389 | 900389 | Land and Land Rights | 5,133,327 | | - |
| 760 | | 900 | 390 | 900390 | Structures and Improvements | 68,404,152 | | 1,264,519 |
| 761 | | 900 | 390.1 | 900390.1 | Bulk Power Office Building Remodeling | - | | - |
| 762 | | 900 | 390.2 | 900390.2 | Bulk Power Office Building | - | | - |
| 763 | | 900 | 391 | 900391 | Office Furniture and Equipment | 943,753 | | 47,407 |
| 764 | | 900 | 391.1 | 900391.1 | Office Furniture and Equipment - PC System | - | | - |
| 765 | | 900 | 391.2 | 900391.2 | Office Furniture and Equipment - PC's | - | | - |
| 766 | | 900 | 391.3 | 900391.3 | Computer Hardware | - | | - |
| 767 | | 900 | 391.5 | 900391.5 | Computer Hardware - Solar | - | | - |
| 768 | | 900 | 391.7 | 900391.7 | Computer Hardware | - | | - |
| 769 | | 900 | 392 | 900392 | Transportation Equipment - Light | 334,552 | | 17,207 |
| 770 | | 900 | 392.1 | 900392.1 | Transportation Equipment - Heavy | 52,320 | | 2,539 |
| 771 | | 900 | 392.2 | 900392.2 | Transportation Equipment - Trailers | 10,272 | | 343 |
| 772 | | 900 | 392.4 | 900392.4 | Transportation Equipment - Leaseback | - | | - |
| 773 | | 900 | 393 | 900393 | Stores Equipment | - | | - |
| 774 | | 900 | 394 | 900394 | Tools, Shop & Garage Equipment | 587,200 | | 27,252 |
| 775 | | 900 | 395 | 900395 | Laboratory Equipment | - | | - |
| 776 | | 900 | 396 | 900396 | Power Operated Equipment | 26,134 | | 719 |
| 777 | | 900 | 397 | 900397 | Communication Equipment | - | | - |
| 778 | | 900 | 397.01 | 900397.01 | Computer Hardware | 41,693,402 | | 12,713,255 |
| 779 | | 900 | 397.02 | 900397.02 | Computer Software | 184,773,087 | | 35,095,980 |
| 780 | | 900 | 397.03 | 900397.03 | Communication Equipment | 5,096,541 | | 351,985 |
| 781 | | 900 | 397.2 | 900397.2 | Communication Equipment | - | | - |
| 782 | | 900 | 397.3 | 900397.3 | Communication Equipment | - | | - |
| 783 | | 900 | 398 | 900398 | Miscellaneous Equipment | - | | - |
| 784 | | 900 | 399.1 | 900399.1 | ARO General Plant-1 | - | | - |
| 785 | | | | | | | | |
| 786 | **Total Gross Plant Corporate Plant** | | | | | 307,054,740 | 16.13% | 49,521,205 |
| 787 | | | | | | | | |
| 788 | **Total Electric Plant In Service** | | 101/106 | | | 7,485,561,253 | 3.60% | 269,840,598 |
| 789 | | | | | | | | |
| 790 | **Electric Plant Purchased** | | 102 | | | - | - | - |
| 791 | | | | | | | | |
| 792 | **Electric Plant Acq. Adj.** | | 114 | | | 16,926,239 | 6.65% | 1,125,037 |
| 793 | | | | | | | | |
| 794 | **Total Electric Plant** | | | | | 7,502,487,492 | 3.61% | 270,965,635 |

| | A | B | C | D | E | K | L | M | N |
|---|---|---|---|---|---|---|---|---|---|
| 1 | **Public Service Company of New Mexico** | | | | | | | | |
| 2 | **Schedule H-7** | | | | | | | | |
| 3 | **Depreciation and Amortization Expense** | | | | | | | | |
| 4 | **Base Period Ending 6/30/2026** | | | | | | | | |
| 5 | **Test Period Ending 9/30/2028** | | | | | | | | |
| 6 | Link to WP Plant Lead Sheet | | | | | | | | |
| 7 | **Base Period data is historical Information from the Company's Books and Records.** | | | | | | | | |
| 8 | This schedule is sponsored by PNM Witness Gutierrez | | | | | | | | |
| 9 | Please see the Direct Testimony of PNM Witnesses Gutierrez for discussion of adjustments/changes to the Base Period, Test Period, and Linkage Data. | | | | | | | | |
| 10 | **Location** | **Location Number Note 7** | **FERC** | **Loc/FERC** | **FERC Description** | **Four Corners Impairment Note 1** | **Remove PV Asset Retirement Costs Note 2** | **SRP Sale Note 3** | **PV Lease Expiration Note 3** |
| 11 | | | | | | | | | |
| 12 | **Gross Plant Production Plant** | | | | | | | | |
| 13 | **Steam Production** | | | | | | | | |
| 56 | **All - Steam** | | | | | | | | |
| 57 | | | 310 | | Land and Land Rights | - | | - | - |
| 58 | | | 310.1 | | Land Right of Way | - | | - | - |
| 59 | | | 311 | | Structures & Improvements | - | | - | - |
| 60 | | | 312 | | Boiler Plant Equipment | - | | - | - |
| 61 | | | 314 | | Turbogenerator Units | - | | - | - |
| 62 | | | 315 | | Accessory Electric Equipment | - | | - | - |
| 63 | | | 315.01 | | Computer Hardware | - | | - | - |
| 64 | | | 315.02 | | Computer Software | - | | - | - |
| 65 | | | 315.03 | | Communication Equipment | - | | - | - |
| 66 | | | 316 | | Misc Power Plant Equipment | - | | - | - |
| 67 | | | 317 | | Asset Retirement Costs - Steam | - | | - | - |
| 68 | **Total Steam Production Gross Plant** | | | | | - | - | - | - |
| 69 | | | | | | | | | |
| 70 | | | | | | | | | |
| 71 | **Nuclear Production** | | | | | | | | |
| 129 | **All - Nuclear** | | | | | | | | |
| 130 | | | 320 | | Land and Land Rights | - | - | - | - |
| 131 | | | 320.1 | | Land - Right of Way | - | - | - | - |
| 132 | | | 321 | | Structures and Improvements | - | - | - | - |
| 133 | | | 322 | | Reactor Plant Equipment | - | - | - | - |
| 134 | | | 323 | | Turbogenerator Units | - | - | - | - |
| 135 | | | 324 | | Accessory Electric Equipment | - | - | - | - |
| 136 | | | 324.01 | | Computer Hardware | - | - | - | - |
| 137 | | | 324.02 | | Computer Software | - | - | - | - |
| 138 | | | 324.03 | | Communication Equipment | - | - | - | - |
| 139 | | | 325 | | Misc Power Plant Equipment | - | - | - | - |
| 140 | | | 326 | | Asset Retirement Costs Nuclear Prod Plant | - | (134,219) | - | - |
| 141 | **Total Nuclear Production Gross Plant** | | | | | - | | - | - |
| 142 | | | | | | | | | |
| 143 | | | | | | | | | |

| | A | B | C | D | E | K | L | M | N |
|---|---|---|---|---|---|---|---|---|---|
| 1 | **Public Service Company of New Mexico** | | | | | | | | |
| 2 | **Schedule H-7** | | | | | | | | |
| 3 | **Depreciation and Amortization Expense** | | | | | | | | |
| 4 | **Base Period Ending 6/30/2026** | | | | | | | | |
| 5 | **Test Period Ending 9/30/2028** | | | | | | | | |
| 6 | Link to WP Plant Lead Sheet | | | | | | | | |
| 7 | **Base Period data is historical Information from the Company's Books and Records.** | | | | | | | | |
| 8 | This schedule is sponsored by PNM Witness Gutierrez | | | | | | | | |
| 9 | Please see the Direct Testimony of PNM Witnesses Gutierrez for discussion of adjustments/changes to the Base Period, Test Period, and Linkage Data. | | | | | | | | |
| 10 | **Location** | **Location Number Note 7** | **FERC** | **Loc/FERC** | **FERC Description** | **Four Corners Impairment Note 1** | **Remove PV Asset Retirement Costs Note 2** | **SRP Sale Note 3** | **PV Lease Expiration Note 3** |
| 144 | **Solar Production** | | | | | | | | |
| 237 | **All - Solar** | | | | | | | | |
| 238 | | | 338.01 | | Land & Land Rights | - | - | - | - |
| 239 | | | 338.02 | | Structures and Improvements | - | - | - | - |
| 240 | | | 338.04 | | Solar Panels | - | - | - | - |
| 241 | | | 338.05 | | Collector System | - | - | - | - |
| 242 | | | 338.07 | | Solar Inverters | - | - | - | - |
| 243 | | | 338.08 | | Other Accessory Electrical Equipment | - | - | - | - |
| 244 | | | 338.09 | | Computer Hardware | - | - | - | - |
| 245 | | | 338.10 | | Computer Software | - | - | - | - |
| 246 | | | 338.11 | | Communication Equipment | - | - | - | - |
| 247 | | | 338.12 | | Misc. Power Plant Equipment | - | - | - | - |
| 248 | **Total Solar Production Gross Plant** | | | | | - | | - | - |
| 249 | | | | | | | | | |
| 250 | **Other Production** | | | | | | | | |
| 251 | | | | | | | | | |
| 252 | **Other Production - Gas:** | | | | | | | | |
| 339 | **All - Gas** | | 340 | | Land and Land Rights | | | - | - |
| 340 | | | 340.1 | | Land - Right of Way | | | - | - |
| 341 | | | 341 | | Structures and Improvements | | | - | - |
| 342 | | | 342 | | Fuel Holders, Producers, Accessories | | | - | - |
| 343 | | | 343 | | Prime Movers | | | | |
| 344 | | | 344 | | Generators | | | - | - |
| 345 | | | 345 | | Accessory Electric Equipment | | | - | - |
| 346 | | | 345.01 | | Computer Hardware | | | - | - |
| 347 | | | 345.02 | | Computer Software | | | - | - |
| 348 | | | 345.03 | | Communication Equipment | | | - | - |
| 349 | | | 346 | | Misc Power Plant Equipment | | | - | - |
| 350 | | | 347 | | Asset Retirement Costs - Other Production | | | - | - |
| 351 | **Total Other Production Plant - Gas** | | | | | - | | - | - |
| 352 | | | | | | | | | |
| 353 | | | | | | | | | |
| 354 | **Total Other Production Gross Plant** | | | | | **-** | | **-** | **-** |
| 355 | | | | | | | | | |
| 356 | **Total Gross Plant Production** | | | | | **-** | **-** | **-** | **-** |
| 357 | | | | | | | | | |

| | A | B | C | D | E | K | L | M | N |
|---|---|---|---|---|---|---|---|---|---|
| 1 | **Public Service Company of New Mexico** | | | | | | | | |
| 2 | **Schedule H-7** | | | | | | | | |
| 3 | **Depreciation and Amortization Expense** | | | | | | | | |
| 4 | **Base Period Ending 6/30/2026** | | | | | | | | |
| 5 | **Test Period Ending 9/30/2028** | | | | | | | | |
| 6 | Link to WP Plant Lead Sheet | | | | | | | | |
| 7 | **Base Period data is historical Information from the Company's Books and Records.** | | | | | | | | |
| 8 | This schedule is sponsored by PNM Witness Gutierrez | | | | | | | | |
| 9 | Please see the Direct Testimony of PNM Witnesses Gutierrez for discussion of adjustments/changes to the Base Period, Test Period, and Linkage Data. | | | | | | | | |
| 10 | **Location** | **Location Number Note 7** | **FERC** | **Loc/FERC** | **FERC Description** | **Four Corners Impairment Note 1** | **Remove PV Asset Retirement Costs Note 2** | **SRP Sale Note 3** | **PV Lease Expiration Note 3** |
| 358 | | | | | | | | | |
| 359 | **Total Gross Energy Storage Plant** | | | | | | | | |
| 386 | **All - Energy Storage** | | 387.01 | 387.01 | Land & Land Rights | | | | |
| 387 | | | 387.02 | 387.02 | Structures & Improvements | | | | |
| 388 | | | 387.03 | 387.03 | Energy Storage Equipment | | | | |
| 389 | | | 387.05 | 387.05 | Collector System | | | | |
| 390 | | | 387.06 | 387.06 | Generator Step-Up Transformers (GSU) | | | | |
| 391 | | | 387.07 | 387.07 | Inverters | | | | |
| 392 | | | 387.08 | 387.08 | Computer Hardware | | | | |
| 393 | | | 387.09 | 387.09 | Computer Software | | | | |
| 394 | | | 387.10 | 387.10 | Communication Equipment | | | | |
| 395 | | | 387.11 | 387.11 | Misc. Energy Storage Equipment | | | | |
| 396 | | | 387.12 | 387.12 | Asset Retirement Costs for Energy Storage | | | | |
| 397 | **Total Gross Battery Storage Plant** | | | | | | | - | - |
| 398 | | | | | | | | | |
| 399 | | | | | | | | | |
| 400 | **Gross Plant Transmission Plant** | | | | | | | | |
| 401 | | | | | | | | | |
| 453 | **All - Transmission** | | | | | | | | |
| 454 | | | 350 | | Land and Land Rights | - | | | |
| 455 | | | 350.1 | | Land - Right of Way | - | | | |
| 456 | | | 351.01 | | Computer Hardware | - | | | |
| 457 | | | 351.02 | | Computer Software | - | | | |
| 458 | | | 351.03 | | Communication Equipment | - | | | |
| 459 | | | 352 | | Structures and Improvements | - | | | |
| 460 | | | 353 | | Station Equipment | - | | | |
| 461 | | | 353.1 | | Station Equipment - Step-up Xfmr and Aux | - | | | |
| 462 | | | 354 | | Towers and Fixtures | - | | | |
| 463 | | | 355 | | Poles and Fixtures | - | | | |
| 464 | | | 356 | | Overhead Conductors and Devices | - | | | |
| 465 | | | 357 | | Underground Conduit | - | | | |
| 466 | | | 359 | | Roads and Trails | - | | | |
| 467 | **Total Gross Plant Transmission Plant** | | | | | - | | - | - |
| 468 | | | | | | | | | |
| 469 | | | | | | | | | |

| | A | B | C | D | E | K | L | M | N |
|---|---|---|---|---|---|---|---|---|---|
| 1 | **Public Service Company of New Mexico** | | | | | | | | |
| 2 | **Schedule H-7** | | | | | | | | |
| 3 | **Depreciation and Amortization Expense** | | | | | | | | |
| 4 | **Base Period Ending 6/30/2026** | | | | | | | | |
| 5 | **Test Period Ending 9/30/2028** | | | | | | | | |
| 6 | Link to WP Plant Lead Sheet | | | | | | | | |
| 7 | **Base Period data is historical Information from the Company's Books and Records.** | | | | | | | | |
| 8 | This schedule is sponsored by PNM Witness Gutierrez | | | | | | | | |
| 9 | Please see the Direct Testimony of PNM Witnesses Gutierrez for discussion of adjustments/changes to the Base Period, Test Period, and Linkage Data. | | | | | | | | |
| 10 | **Location** | **Location Number Note 7** | **FERC** | **Loc/FERC** | **FERC Description** | **Four Corners Impairment Note 1** | **Remove PV Asset Retirement Costs Note 2** | **SRP Sale Note 3** | **PV Lease Expiration Note 3** |
| 470 | | | | | | | | | |
| 471 | **Gross Plant Distribution Plant** | | | | | | | | |
| 665 | **All - Distribution** | | | | | | | | |
| 666 | | | 360 | | Land and Land Rights | - | | | |
| 667 | | | 360.1 | | Land - Right of Way | - | | | |
| 668 | | | 361 | | Structures and Improvements | - | | | |
| 669 | | | 362 | | Station Equipment | - | | | |
| 670 | | | 363.01 | | Computer Hardware | - | | | |
| 671 | | | 363.02 | | Computer Software | - | | | |
| 672 | | | 363.03 | | Communication Equipment | - | | | |
| 673 | | | 364 | | Poles, Towers and Fixtures | - | | | |
| 674 | | | 365 | | Overhead Conductors and Devices | - | | | |
| 675 | | | 366 | | Underground Conduit | - | | | |
| 676 | | | 367 | | Underground Conductors and Devices | - | | | |
| 677 | | | 368 | | Line Transformers | - | | | |
| 678 | | | 369 | | Services | - | | | |
| 679 | | | 369.1 | | Services - Underground | - | | | |
| 680 | | | 370 | | Meters | - | | | |
| 681 | | | 370.4 | | Meters - Grid Mod | - | | | |
| 682 | | | 371 | | Installations on Customers' Premises | - | | | |
| 683 | | | 371.1 | | Leased Flood Lighting | - | | | |
| 684 | | | 373 | | Street Lighting and Signal Systems | - | | | |
| 685 | | | 374 | | Asset Retirement Costs - Distribution | - | | | |
| 686 | **Total Gross Plant Distribution Plant** | | | | | - | | - | - |
| 687 | | | | | | | | | |

| | A | B | C | D | E | K | L | M | N |
|---|---|---|---|---|---|---|---|---|---|
| 1 | **Public Service Company of New Mexico** | | | | | | | | |
| 2 | **Schedule H-7** | | | | | | | | |
| 3 | **Depreciation and Amortization Expense** | | | | | | | | |
| 4 | **Base Period Ending 6/30/2026** | | | | | | | | |
| 5 | **Test Period Ending 9/30/2028** | | | | | | | | |
| 6 | Link to WP Plant Lead Sheet | | | | | | | | |
| 7 | **Base Period data is historical Information from the Company's Books and Records.** | | | | | | | | |
| 8 | This schedule is sponsored by PNM Witness Gutierrez | | | | | | | | |
| 9 | Please see the Direct Testimony of PNM Witnesses Gutierrez for discussion of adjustments/changes to the Base Period, Test Period, and Linkage Data. | | | | | | | | |
| 10 | **Location** | **Location Number Note 7** | **FERC** | **Loc/FERC** | **FERC Description** | **Four Corners Impairment Note 1** | **Remove PV Asset Retirement Costs Note 2** | **SRP Sale Note 3** | **PV Lease Expiration Note 3** |
| 688 | | | | | | | | | |
| 689 | **Gross Plant G&I Plant (303,389-399)** | | | | | | | | |
| 719 | **Total General & Intangible Plant** | | | | | | | | |
| 720 | | | 303 | | Miscellaneous Intangible Plant | - | | | |
| 721 | | | 389 | | Land and Land Rights | - | | | |
| 722 | | | 390 | | Structures and Improvements | - | | | |
| 723 | | | 390.1 | | Bulk Power Office Building Remodeling | - | | | |
| 724 | | | 390.2 | | Bulk Power Office Building | - | | | |
| 725 | | | 391 | | Office Furniture and Equipment | - | | | |
| 726 | | | 391.1 | | Office Furniture and Equipment - PC System | - | | | |
| 727 | | | 391.2 | | Office Furniture and Equipment - PC's | - | | | |
| 728 | | | 391.3 | | Computer Hardware | - | | | |
| 729 | | | 391.5 | | Computer Hardware - Solar | - | | | |
| 730 | | | 391.7 | | Computer Hardware | - | | | |
| 731 | | | 392 | | Transportation Equipment - Light | - | | | |
| 732 | | | 392.1 | | Transportation Equipment - Heavy | - | | | |
| 733 | | | 392.2 | | Transportation Equipment - Trailers | - | | | |
| 734 | | | 392.4 | | Transportation Equipment - Leaseback | - | | | |
| 735 | | | 393 | | Stores Equipment | - | | | |
| 736 | | | 394 | | Tools, Shop & Garage Equipment | - | | | |
| 737 | | | 395 | | Laboratory Equipment | - | | | |
| 738 | | | 396 | | Power Operated Equipment | - | | | |
| 739 | | | 397.01 | | Computer Hardware | - | | | |
| 740 | | | 397.02 | | Computer Software | - | | | |
| 741 | | | 397.03 | | Communication Equipment | - | | | |
| 742 | | | 398 | | Miscellaneous Equipment | - | | | |
| 743 | | | 399.1 | | ARO General Plant-1 | - | | | |
| 744 | **Total Gross Plant G&I Plant - PNM** | | | | | - | | - | - |
| 745 | | | | | | | | | |
| 746 | **Total Electric Plant In Service** | | 101/106 | | | - | - | - | - |
| 747 | | | | | | | | | |
| 748 | **Electric Plant Purchased** | | 102 | | | | | - | - |
| 749 | | | | | | | | | |
| 750 | **Electric Plant Acquisition Adjustment** | | | | Acq. Adj. - Palo Verde Unit 1&2 (Drexel) | | | | |
| 751 | | | | | Acq. Adj. - Palo Verde Unit 2 (First Chicago) | | | | |
| 752 | | | | | Acq. Adj. - (EIP) | | | | |
| 753 | **Electric Plant Acquisition Adjustment** | | 114 | | | - | | - | - |
| 754 | | | | | | | | | |
| 755 | **Total Electric Plant** | | | | | - | | - | - |
| 756 | | | | | | | | | |

| | A | B | C | D | E | K | L | M | N |
|---|---|---|---|---|---|---|---|---|---|
| 1 | **Public Service Company of New Mexico** | | | | | | | | |
| 2 | **Schedule H-7** | | | | | | | | |
| 3 | **Depreciation and Amortization Expense** | | | | | | | | |
| 4 | **Base Period Ending 6/30/2026** | | | | | | | | |
| 5 | **Test Period Ending 9/30/2028** | | | | | | | | |
| 6 | Link to WP Plant Lead Sheet | | | | | | | | |
| 7 | **Base Period data is historical Information from the Company's Books and Records.** | | | | | | | | |
| 8 | This schedule is sponsored by PNM Witness Gutierrez | | | | | | | | |
| 9 | Please see the Direct Testimony of PNM Witnesses Gutierrez for discussion of adjustments/changes to the Base Period, Test Period, and Linkage Data. | | | | | | | | |
| 10 | **Location** | **Location Number Note 7** | **FERC** | **Loc/FERC** | **FERC Description** | **Four Corners Impairment Note 1** | **Remove PV Asset Retirement Costs Note 2** | **SRP Sale Note 3** | **PV Lease Expiration Note 3** |
| 757 | | | | | | | | | |
| 758 | **Corporate Unallocated** | 900 | 303 | 900303 | Miscellaneous Intangible Plant | | | | |
| 759 | | 900 | 389 | 900389 | Land and Land Rights | | | | |
| 760 | | 900 | 390 | 900390 | Structures and Improvements | | | | |
| 761 | | 900 | 390.1 | 900390.1 | Bulk Power Office Building Remodeling | | | | |
| 762 | | 900 | 390.2 | 900390.2 | Bulk Power Office Building | | | | |
| 763 | | 900 | 391 | 900391 | Office Furniture and Equipment | | | | |
| 764 | | 900 | 391.1 | 900391.1 | Office Furniture and Equipment - PC System | | | | |
| 765 | | 900 | 391.2 | 900391.2 | Office Furniture and Equipment - PC's | | | | |
| 766 | | 900 | 391.3 | 900391.3 | Computer Hardware | | | | |
| 767 | | 900 | 391.5 | 900391.5 | Computer Hardware - Solar | | | | |
| 768 | | 900 | 391.7 | 900391.7 | Computer Hardware | | | | |
| 769 | | 900 | 392 | 900392 | Transportation Equipment - Light | | | | |
| 770 | | 900 | 392.1 | 900392.1 | Transportation Equipment - Heavy | | | | |
| 771 | | 900 | 392.2 | 900392.2 | Transportation Equipment - Trailers | | | | |
| 772 | | 900 | 392.4 | 900392.4 | Transportation Equipment - Leaseback | | | | |
| 773 | | 900 | 393 | 900393 | Stores Equipment | | | | |
| 774 | | 900 | 394 | 900394 | Tools, Shop & Garage Equipment | | | | |
| 775 | | 900 | 395 | 900395 | Laboratory Equipment | | | | |
| 776 | | 900 | 396 | 900396 | Power Operated Equipment | | | | |
| 777 | | 900 | 397 | 900397 | Communication Equipment | | | | |
| 778 | | 900 | 397.01 | 900397.01 | Computer Hardware | | | | |
| 779 | | 900 | 397.02 | 900397.02 | Computer Software | | | | |
| 780 | | 900 | 397.03 | 900397.03 | Communication Equipment | | | | |
| 781 | | 900 | 397.2 | 900397.2 | Communication Equipment | | | | |
| 782 | | 900 | 397.3 | 900397.3 | Communication Equipment | | | | |
| 783 | | 900 | 398 | 900398 | Miscellaneous Equipment | | | | |
| 784 | | 900 | 399.1 | 900399.1 | ARO General Plant-1 | | | | |
| 785 | | | | | | | | | |
| 786 | **Total Gross Plant Corporate Plant** | | | | | - | | - | - |
| 787 | | | | | | | | | |
| 788 | **Total Electric Plant In Service** | | 101/106 | | | - | | - | - |
| 789 | | | | | | | | | |
| 790 | **Electric Plant Purchased** | | 102 | | | | | - | - |
| 791 | | | | | | | | | |
| 792 | **Electric Plant Acq. Adj.** | | 114 | | | - | | - | - |
| 793 | | | | | | | | | |
| 794 | **Total Electric Plant** | | | | | - | | - | - |

| | A | B | C | D | E | O | P | Q |
|---|---|---|---|---|---|---|---|---|
| 1 | **Public Service Company of New Mexico** | | | | | | | |
| 2 | **Schedule H-7** | | | | | | | |
| 3 | **Depreciation and Amortization Expense** | | | | | | | |
| 4 | **Base Period Ending 6/30/2026** | | | | | | | |
| 5 | **Test Period Ending 9/30/2028** | | | | | | | |
| 6 | Link to WP Plant Lead Sheet | | | | | | | |
| 7 | **Base Period data is historical Information from the Company's Books and Records.** | | | | | | | |
| 8 | This schedule is sponsored by PNM Witness Gutierrez | | | | | | | |
| 9 | Please see the Direct Testimony of PNM Witnesses Gutierrez for discussion of adjustments/changes to the Base Period, Test Period, and Linkage Data. | | | | | | | |
| 10 | **Location** | **Location Number Note 7** | **FERC** | **Loc/FERC** | **FERC Description** | **Annualized Depreciation Adjustment Note 4** | **Shared Service Allocation Note 5** | **Total Base Period Adjustments** |
| 11 | | | | | | | | |
| 12 | **Gross Plant Production Plant** | | | | | | | |
| 13 | **Steam Production** | | | | | | | |
| 56 | **All - Steam** | | | | | | | |
| 57 | | | 310 | | Land and Land Rights | - | - | - |
| 58 | | | 310.1 | | Land Right of Way | (101) | - | (101) |
| 59 | | | 311 | | Structures & Improvements | (377,804) | - | (377,804) |
| 60 | | | 312 | | Boiler Plant Equipment | (3,540,190) | - | (3,540,190) |
| 61 | | | 314 | | Turbogenerator Units | (141,479) | - | (141,479) |
| 62 | | | 315 | | Accessory Electric Equipment | 14,002 | - | 14,002 |
| 63 | | | 315.01 | | Computer Hardware | - | - | - |
| 64 | | | 315.02 | | Computer Software | (3,274) | - | (3,274) |
| 65 | | | 315.03 | | Communication Equipment | (277) | - | (277) |
| 66 | | | 316 | | Misc Power Plant Equipment | (627,235) | - | (627,235) |
| 67 | | | 317 | | Asset Retirement Costs - Steam | - | - | - |
| 68 | **Total Steam Production Gross Plant** | | | | | (4,676,358) | - | (4,676,358) |
| 69 | | | | | | | | |
| 70 | | | | | | | | |
| 71 | **Nuclear Production** | | | | | | | |
| 129 | **All - Nuclear** | | | | | | | |
| 130 | | | 320 | | Land and Land Rights | - | - | - |
| 131 | | | 320.1 | | Land - Right of Way | 99,947 | - | 99,947 |
| 132 | | | 321 | | Structures and Improvements | (444,262) | - | (444,262) |
| 133 | | | 322 | | Reactor Plant Equipment | 272,134 | - | 272,134 |
| 134 | | | 323 | | Turbogenerator Units | 193,977 | - | 193,977 |
| 135 | | | 324 | | Accessory Electric Equipment | 1,218,772 | - | 1,218,772 |
| 136 | | | 324.01 | | Computer Hardware | 4,270,368 | - | 4,270,368 |
| 137 | | | 324.02 | | Computer Software | 811,744 | - | 811,744 |
| 138 | | | 324.03 | | Communication Equipment | 325,672 | - | 325,672 |
| 139 | | | 325 | | Misc Power Plant Equipment | (226,111) | - | (226,111) |
| 140 | | | 326 | | Asset Retirement Costs Nuclear Prod Plant | - | - | - |
| 141 | **Total Nuclear Production Gross Plant** | | | | | 6,522,241 | - | 6,522,241 |
| 142 | | | | | | | | |
| 143 | | | | | | | | |

| | A | B | C | D | E | O | P | Q |
|---|---|---|---|---|---|---|---|---|
| 1 | **Public Service Company of New Mexico** | | | | | | | |
| 2 | **Schedule H-7** | | | | | | | |
| 3 | **Depreciation and Amortization Expense** | | | | | | | |
| 4 | **Base Period Ending 6/30/2026** | | | | | | | |
| 5 | **Test Period Ending 9/30/2028** | | | | | | | |
| 6 | Link to WP Plant Lead Sheet | | | | | | | |
| 7 | **Base Period data is historical Information from the Company's Books and Records.** | | | | | | | |
| 8 | This schedule is sponsored by PNM Witness Gutierrez | | | | | | | |
| 9 | Please see the Direct Testimony of PNM Witnesses Gutierrez for discussion of adjustments/changes to the Base Period, Test Period, and Linkage Data. | | | | | | | |
| 10 | **Location** | **Location Number Note 7** | **FERC** | **Loc/FERC** | **FERC Description** | **Annualized Depreciation Adjustment Note 4** | **Shared Service Allocation Note 5** | **Total Base Period Adjustments** |
| 144 | **Solar Production** | | | | | | | |
| 237 | **All - Solar** | | | | | | | |
| 238 | | | 338.01 | | Land & Land Rights | - | - | - |
| 239 | | | 338.02 | | Structures and Improvements | (0) | - | (0) |
| 240 | | | 338.04 | | Solar Panels | 0 | - | 0 |
| 241 | | | 338.05 | | Collector System | 56,597 | - | 56,597 |
| 242 | | | 338.07 | | Solar Inverters | - | - | - |
| 243 | | | 338.08 | | Other Accessory Electrical Equipment | (0) | - | (0) |
| 244 | | | 338.09 | | Computer Hardware | (0) | - | (0) |
| 245 | | | 338.10 | | Computer Software | - | - | - |
| 246 | | | 338.11 | | Communication Equipment | (30,073) | - | (30,073) |
| 247 | | | 338.12 | | Misc. Power Plant Equipment | 29,052 | - | 29,052 |
| 248 | **Total Solar Production Gross Plant** | | | | | 55,576 | - | 55,576 |
| 249 | | | | | | | | |
| 250 | **Other Production** | | | | | | | |
| 251 | | | | | | | | |
| 252 | **Other Production - Gas:** | | | | | | | |
| 339 | **All - Gas** | | 340 | | Land and Land Rights | - | - | - |
| 340 | | | 340.1 | | Land - Right of Way | 0 | - | 0 |
| 341 | | | 341 | | Structures and Improvements | 46,073 | - | 46,073 |
| 342 | | | 342 | | Fuel Holders, Producers, Accessories | 118,185 | - | 118,185 |
| 343 | | | 343 | | Prime Movers | | | - |
| 344 | | | 344 | | Generators | (129,705) | - | (129,705) |
| 345 | | | 345 | | Accessory Electric Equipment | 1,276 | - | 1,276 |
| 346 | | | 345.01 | | Computer Hardware | 10,777 | - | 10,777 |
| 347 | | | 345.02 | | Computer Software | 6,235 | - | 6,235 |
| 348 | | | 345.03 | | Communication Equipment | 0 | - | 0 |
| 349 | | | 346 | | Misc Power Plant Equipment | 9,829 | - | 9,829 |
| 350 | | | 347 | | Asset Retirement Costs - Other Production | - | - | - |
| 351 | **Total Other Production Plant - Gas** | | | | | 62,669 | - | 62,669 |
| 352 | | | | | | | | |
| 353 | | | | | | | | |
| 354 | **Total Other Production Gross Plant** | | | | | **62,669** | **-** | **62,669** |
| 355 | | | | | | | | |
| 356 | **Total Gross Plant Production** | | | | | **1,964,127** | **-** | **1,964,127** |
| 357 | | | | | | | | |

| | A | B | C | D | E | O | P | Q |
|---|---|---|---|---|---|---|---|---|
| 1 | **Public Service Company of New Mexico** | | | | | | | |
| 2 | **Schedule H-7** | | | | | | | |
| 3 | **Depreciation and Amortization Expense** | | | | | | | |
| 4 | **Base Period Ending 6/30/2026** | | | | | | | |
| 5 | **Test Period Ending 9/30/2028** | | | | | | | |
| 6 | Link to WP Plant Lead Sheet | | | | | | | |
| 7 | **Base Period data is historical Information from the Company's Books and Records.** | | | | | | | |
| 8 | This schedule is sponsored by PNM Witness Gutierrez | | | | | | | |
| 9 | Please see the Direct Testimony of PNM Witnesses Gutierrez for discussion of adjustments/changes to the Base Period, Test Period, and Linkage Data. | | | | | | | |
| 10 | **Location** | **Location Number Note 7** | **FERC** | **Loc/FERC** | **FERC Description** | **Annualized Depreciation Adjustment Note 4** | **Shared Service Allocation Note 5** | **Total Base Period Adjustments** |
| 358 | | | | | | | | |
| 359 | **Total Gross Energy Storage Plant** | | | | | | | |
| 386 | **All - Energy Storage** | | 387.01 | 387.01 | Land & Land Rights | - | | - |
| 387 | | | 387.02 | 387.02 | Structures & Improvements | 697,014 | | 697,014 |
| 388 | | | 387.03 | 387.03 | Energy Storage Equipment | 506,570 | | 506,570 |
| 389 | | | 387.05 | 387.05 | Collector System | 643,612 | | 643,612 |
| 390 | | | 387.06 | 387.06 | Generator Step-Up Transformers (GSU) | 1,778,493 | | 1,778,493 |
| 391 | | | 387.07 | 387.07 | Inverters | - | | - |
| 392 | | | 387.08 | 387.08 | Computer Hardware | 1,069,628 | | 1,069,628 |
| 393 | | | 387.09 | 387.09 | Computer Software | 66,026 | | 66,026 |
| 394 | | | 387.10 | 387.10 | Communication Equipment | 21,301 | | 21,301 |
| 395 | | | 387.11 | 387.11 | Misc. Energy Storage Equipment | 91,365 | | 91,365 |
| 396 | | | 387.12 | 387.12 | Asset Retirement Costs for Energy Storage | - | | - |
| 397 | **Total Gross Battery Storage Plant** | | | | | 4,874,009 | - | 4,874,009 |
| 398 | | | | | | | | |
| 399 | | | | | | | | |
| 400 | **Gross Plant Transmission Plant** | | | | | | | |
| 401 | | | | | | | | |
| 453 | **All - Transmission** | | | | | | | |
| 454 | | | 350 | | Land and Land Rights | (1,335,562) | | (1,335,562) |
| 455 | | | 350.1 | | Land - Right of Way | (1,036) | | (1,036) |
| 456 | | | 351.01 | | Computer Hardware | (434,565) | | (434,565) |
| 457 | | | 351.02 | | Computer Software | 189,043 | | 189,043 |
| 458 | | | 351.03 | | Communication Equipment | 31,843 | | 31,843 |
| 459 | | | 352 | | Structures and Improvements | (6,969) | | (6,969) |
| 460 | | | 353 | | Station Equipment | 578,313 | | 578,313 |
| 461 | | | 353.1 | | Station Equipment - Step-up Xfmr and Aux | 14,487 | | 14,487 |
| 462 | | | 354 | | Towers and Fixtures | (12,682) | | (12,682) |
| 463 | | | 355 | | Poles and Fixtures | 1,499,253 | | 1,499,253 |
| 464 | | | 356 | | Overhead Conductors and Devices | (37,277) | | (37,277) |
| 465 | | | 357 | | Underground Conduit | (0) | | (0) |
| 466 | | | 359 | | Roads and Trails | 0 | | 0 |
| 467 | **Total Gross Plant Transmission Plant** | | | | | 484,849 | - | 484,849 |
| 468 | | | | | | | | |
| 469 | | | | | | | | |

| | A | B | C | D | E | O | P | Q |
|---|---|---|---|---|---|---|---|---|
| 1 | **Public Service Company of New Mexico** | | | | | | | |
| 2 | **Schedule H-7** | | | | | | | |
| 3 | **Depreciation and Amortization Expense** | | | | | | | |
| 4 | **Base Period Ending 6/30/2026** | | | | | | | |
| 5 | **Test Period Ending 9/30/2028** | | | | | | | |
| 6 | Link to WP Plant Lead Sheet | | | | | | | |
| 7 | **Base Period data is historical Information from the Company's Books and Records.** | | | | | | | |
| 8 | This schedule is sponsored by PNM Witness Gutierrez | | | | | | | |
| 9 | Please see the Direct Testimony of PNM Witnesses Gutierrez for discussion of adjustments/changes to the Base Period, Test Period, and Linkage Data. | | | | | | | |
| 10 | **Location** | **Location Number Note 7** | **FERC** | **Loc/FERC** | **FERC Description** | **Annualized Depreciation Adjustment Note 4** | **Shared Service Allocation Note 5** | **Total Base Period Adjustments** |
| 470 | | | | | | | | |
| 471 | **Gross Plant Distribution Plant** | | | | | | | |
| 665 | **All - Distribution** | | | | | | | |
| 666 | | | 360 | | Land and Land Rights | - | - | - |
| 667 | | | 360.1 | | Land - Right of Way | (0) | - | (0) |
| 668 | | | 361 | | Structures and Improvements | 248,202 | - | 248,202 |
| 669 | | | 362 | | Station Equipment | 220,028 | - | 220,028 |
| 670 | | | 363.01 | | Computer Hardware | 505,871 | - | 505,871 |
| 671 | | | 363.02 | | Computer Software | 1,739,305 | - | 1,739,305 |
| 672 | | | 363.03 | | Communication Equipment | 78,834 | - | 78,834 |
| 673 | | | 364 | | Poles, Towers and Fixtures | 1,583,781 | - | 1,583,781 |
| 674 | | | 365 | | Overhead Conductors and Devices | 408,897 | - | 408,897 |
| 675 | | | 366 | | Underground Conduit | 200,368 | - | 200,368 |
| 676 | | | 367 | | Underground Conductors and Devices | 609,986 | - | 609,986 |
| 677 | | | 368 | | Line Transformers | 151,875 | - | 151,875 |
| 678 | | | 369 | | Services | 59,361 | - | 59,361 |
| 679 | | | 369.1 | | Services - Underground | 204,453 | - | 204,453 |
| 680 | | | 370 | | Meters | 46,732 | - | 46,732 |
| 681 | | | 370.4 | | Meters - Grid Mod | 7,900 | - | 7,900 |
| 682 | | | 371 | | Installations on Customers' Premises | 181,649 | - | 181,649 |
| 683 | | | 371.1 | | Leased Flood Lighting | 7,442 | - | 7,442 |
| 684 | | | 373 | | Street Lighting and Signal Systems | 39,871 | - | 39,871 |
| 685 | | | 374 | | Asset Retirement Costs - Distribution | - | - | - |
| 686 | **Total Gross Plant Distribution Plant** | | | | | 6,294,554 | - | 6,294,554 |
| 687 | | | | | | | | |

| | A | B | C | D | E | O | P | Q |
|---|---|---|---|---|---|---|---|---|
| 1 | **Public Service Company of New Mexico** | | | | | | | |
| 2 | **Schedule H-7** | | | | | | | |
| 3 | **Depreciation and Amortization Expense** | | | | | | | |
| 4 | **Base Period Ending 6/30/2026** | | | | | | | |
| 5 | **Test Period Ending 9/30/2028** | | | | | | | |
| 6 | Link to WP Plant Lead Sheet | | | | | | | |
| 7 | **Base Period data is historical Information from the Company's Books and Records.** | | | | | | | |
| 8 | This schedule is sponsored by PNM Witness Gutierrez | | | | | | | |
| 9 | Please see the Direct Testimony of PNM Witnesses Gutierrez for discussion of adjustments/changes to the Base Period, Test Period, and Linkage Data. | | | | | | | |
| 10 | **Location** | **Location Number Note 7** | **FERC** | **Loc/FERC** | **FERC Description** | **Annualized Depreciation Adjustment Note 4** | **Shared Service Allocation Note 5** | **Total Base Period Adjustments** |
| 688 | | | | | | | | |
| 689 | **Gross Plant G&I Plant (303,389-399)** | | | | | | | |
| 719 | **Total General & Intangible Plant** | | | | | | | |
| 720 | | | 303 | | Miscellaneous Intangible Plant | - | - | - |
| 721 | | | 389 | | Land and Land Rights | - | - | - |
| 722 | | | 390 | | Structures and Improvements | (4,908) | - | (4,908) |
| 723 | | | 390.1 | | Bulk Power Office Building Remodeling | (0) | - | (0) |
| 724 | | | 390.2 | | Bulk Power Office Building | - | - | - |
| 725 | | | 391 | | Office Furniture and Equipment | (23,637) | - | (23,637) |
| 726 | | | 391.1 | | Office Furniture and Equipment - PC System | - | - | - |
| 727 | | | 391.2 | | Office Furniture and Equipment - PC's | - | - | - |
| 728 | | | 391.3 | | Computer Hardware | - | - | - |
| 729 | | | 391.5 | | Computer Hardware - Solar | - | - | - |
| 730 | | | 391.7 | | Computer Hardware | - | - | - |
| 731 | | | 392 | | Transportation Equipment - Light | 6,997 | - | 6,997 |
| 732 | | | 392.1 | | Transportation Equipment - Heavy | 69,868 | - | 69,868 |
| 733 | | | 392.2 | | Transportation Equipment - Trailers | 76 | - | 76 |
| 734 | | | 392.4 | | Transportation Equipment - Leaseback | - | - | - |
| 735 | | | 393 | | Stores Equipment | 2,484 | - | 2,484 |
| 736 | | | 394 | | Tools, Shop & Garage Equipment | 55,713 | - | 55,713 |
| 737 | | | 395 | | Laboratory Equipment | (617) | - | (617) |
| 738 | | | 396 | | Power Operated Equipment | 21,790 | - | 21,790 |
| 739 | | | 397.01 | | Computer Hardware | 181,346 | - | 181,346 |
| 740 | | | 397.02 | | Computer Software | 1,043,396 | - | 1,043,396 |
| 741 | | | 397.03 | | Communication Equipment | 0 | - | 0 |
| 742 | | | 398 | | Miscellaneous Equipment | 50,748 | - | 50,748 |
| 743 | | | 399.1 | | ARO General Plant-1 | - | - | - |
| 744 | **Total Gross Plant G&I Plant - PNM** | | | | | 1,403,256 | - | 1,403,256 |
| 745 | | | | | | | | |
| 746 | **Total Electric Plant In Service** | | 101/106 | | | 15,020,794 | - | 15,020,794 |
| 747 | | | | | | | | |
| 748 | **Electric Plant Purchased** | | 102 | | | - | - | - |
| 749 | | | | | | | | |
| 750 | **Electric Plant Acquisition Adjustment** | | | | Acq. Adj. - Palo Verde Unit 1&2 (Drexel) | - | | - |
| 751 | | | | | Acq. Adj. - Palo Verde Unit 2 (First Chicago) | - | | - |
| 752 | | | | | Acq. Adj. - (EIP) | - | | - |
| 753 | **Electric Plant Acquisition Adjustment** | | 114 | | | - | - | - |
| 754 | | | | | | | | |
| 755 | **Total Electric Plant** | | | | | 15,020,794 | - | 15,020,794 |
| 756 | | | | | | | | |

| | A | B | C | D | E | O | P | Q |
|---|---|---|---|---|---|---|---|---|
| 1 | **Public Service Company of New Mexico** | | | | | | | |
| 2 | **Schedule H-7** | | | | | | | |
| 3 | **Depreciation and Amortization Expense** | | | | | | | |
| 4 | **Base Period Ending 6/30/2026** | | | | | | | |
| 5 | **Test Period Ending 9/30/2028** | | | | | | | |
| 6 | Link to WP Plant Lead Sheet | | | | | | | |
| 7 | **Base Period data is historical Information from the Company's Books and Records.** | | | | | | | |
| 8 | This schedule is sponsored by PNM Witness Gutierrez | | | | | | | |
| 9 | Please see the Direct Testimony of PNM Witnesses Gutierrez for discussion of adjustments/changes to the Base Period, Test Period, and Linkage Data. | | | | | | | |
| 10 | **Location** | **Location Number Note 7** | **FERC** | **Loc/FERC** | **FERC Description** | **Annualized Depreciation Adjustment Note 4** | **Shared Service Allocation Note 5** | **Total Base Period Adjustments** |
| 757 | | | | | | | | |
| 758 | **Corporate Unallocated** | 900 | 303 | 900303 | Miscellaneous Intangible Plant | - | - | - |
| 759 | | 900 | 389 | 900389 | Land and Land Rights | - | - | - |
| 760 | | 900 | 390 | 900390 | Structures and Improvements | 88,207 | 337,880 | 426,087 |
| 761 | | 900 | 390.1 | 900390.1 | Bulk Power Office Building Remodeling | - | - | - |
| 762 | | 900 | 390.2 | 900390.2 | Bulk Power Office Building | - | - | - |
| 763 | | 900 | 391 | 900391 | Office Furniture and Equipment | 3,399 | 17,122 | 20,521 |
| 764 | | 900 | 391.1 | 900391.1 | Office Furniture and Equipment - PC System | - | - | - |
| 765 | | 900 | 391.2 | 900391.2 | Office Furniture and Equipment - PC's | - | - | - |
| 766 | | 900 | 391.3 | 900391.3 | Computer Hardware | - | - | - |
| 767 | | 900 | 391.5 | 900391.5 | Computer Hardware - Solar | - | - | - |
| 768 | | 900 | 391.7 | 900391.7 | Computer Hardware | - | - | - |
| 769 | | 900 | 392 | 900392 | Transportation Equipment - Light | 784 | 6,313 | 7,097 |
| 770 | | 900 | 392.1 | 900392.1 | Transportation Equipment - Heavy | (0) | 750 | 750 |
| 771 | | 900 | 392.2 | 900392.2 | Transportation Equipment - Trailers | 0 | 120 | 120 |
| 772 | | 900 | 392.4 | 900392.4 | Transportation Equipment - Leaseback | - | - | - |
| 773 | | 900 | 393 | 900393 | Stores Equipment | - | - | - |
| 774 | | 900 | 394 | 900394 | Tools, Shop & Garage Equipment | 2,362 | 10,059 | 12,421 |
| 775 | | 900 | 395 | 900395 | Laboratory Equipment | - | - | - |
| 776 | | 900 | 396 | 900396 | Power Operated Equipment | (0) | 212 | 212 |
| 777 | | 900 | 397 | 900397 | Communication Equipment | - | - | - |
| 778 | | 900 | 397.01 | 900397.01 | Computer Hardware | (5,059,779) | 2,324,219 | (2,735,560) |
| 779 | | 900 | 397.02 | 900397.02 | Computer Software | 5,829,848 | 12,346,780 | 18,176,628 |
| 780 | | 900 | 397.03 | 900397.03 | Communication Equipment | 667,529 | 357,747 | 1,025,277 |
| 781 | | 900 | 397.2 | 900397.2 | Communication Equipment | - | - | - |
| 782 | | 900 | 397.3 | 900397.3 | Communication Equipment | - | - | - |
| 783 | | 900 | 398 | 900398 | Miscellaneous Equipment | - | - | - |
| 784 | | 900 | 399.1 | 900399.1 | ARO General Plant-1 | - | - | - |
| 785 | | | | | | | | |
| 786 | **Total Gross Plant Corporate Plant** | | | | | 1,532,350 | 15,401,203 | 16,933,553 |
| 787 | | | | | | | | |
| 788 | **Total Electric Plant In Service** | | 101/106 | | | 16,553,144 | 15,401,203 | 31,954,348 |
| 789 | | | | | | | | |
| 790 | **Electric Plant Purchased** | | 102 | | | - | - | - |
| 791 | | | | | | | | |
| 792 | **Electric Plant Acq. Adj.** | | 114 | | | - | - | - |
| 793 | | | | | | | | |
| 794 | **Total Electric Plant** | | | | | 16,553,144 | 15,401,203 | 31,954,348 |

| | A | B | C | D | E | R | S | T | U |
|---|---|---|---|---|---|---|---|---|---|
| 1 | **Public Service Company of New Mexico** | | | | | | | | |
| 2 | **Schedule H-7** | | | | | | | | |
| 3 | **Depreciation and Amortization Expense** | | | | | | | | |
| 4 | **Base Period Ending 6/30/2026** | | | | | | | | |
| 5 | **Test Period Ending 9/30/2028** | | | | | | | | |
| 6 | Link to WP Plant Lead Sheet | | | | | | | | |
| 7 | **Base Period data is historical Information from the Company's Books and Records.** | | | | | | | | |
| 8 | This schedule is sponsored by PNM Witness Gutierrez | | | | | | | | |
| 9 | Please see the Direct Testimony of PNM Witnesses Gutierrez for discussion of adjustments/changes to the Base Period, Test Period, and Linkage Data. | | | | | | | | |
| 10 | **Location** | **Location Number Note 7** | **FERC** | **Loc/FERC** | **FERC Description** | **Adjusted Base Period Ending Balance 6/30/2026** | **Reference** | **Linkage 1 Jul 26 - Jun 27** | **Linkage 2 Oct 26 - Sept 27** |
| 11 | | | | | | | | | |
| 12 | **Gross Plant Production Plant** | | | | | | | | |
| 13 | **Steam Production** | | | | | | | | |
| 56 | **All - Steam** | | | | | | | | |
| 57 | | | 310 | | Land and Land Rights | - | | - | - |
| 58 | | | 310.1 | | Land Right of Way | 367 | | 367 | 367 |
| 59 | | | 311 | | Structures & Improvements | 344,010 | | 666,096 | 681,019 |
| 60 | | | 312 | | Boiler Plant Equipment | 3,133,508 | | 5,232,373 | 5,235,953 |
| 61 | | | 314 | | Turbogenerator Units | 2,568,498 | | 2,603,105 | 2,613,861 |
| 62 | | | 315 | | Accessory Electric Equipment | 705,919 | | 710,527 | 711,651 |
| 63 | | | 315.01 | | Computer Hardware | - | | - | - |
| 64 | | | 315.02 | | Computer Software | 272,449 | | 218,101 | 218,101 |
| 65 | | | 315.03 | | Communication Equipment | 22,270 | | 22,270 | 22,270 |
| 66 | | | 316 | | Misc Power Plant Equipment | 429,928 | | 933,619 | 938,676 |
| 67 | | | 317 | | Asset Retirement Costs - Steam | 106,713 | | (113,882) | (113,881) |
| 68 | **Total Steam Production Gross Plant** | | | | | 7,583,663 | | 10,272,577 | 10,308,017 |
| 69 | | | | | | | | | |
| 70 | | | | | | | | | |
| 71 | **Nuclear Production** | | | | | | | | |
| 129 | **All - Nuclear** | | | | | | | | |
| 130 | | | 320 | | Land and Land Rights | - | | - | - |
| 131 | | | 320.1 | | Land - Right of Way | 100,614 | | 668 | 668 |
| 132 | | | 321 | | Structures and Improvements | 4,031,114 | | 5,290,316 | 5,302,614 |
| 133 | | | 322 | | Reactor Plant Equipment | 8,026,122 | | 9,663,045 | 9,730,299 |
| 134 | | | 323 | | Turbogenerator Units | 2,938,285 | | 3,491,734 | 3,487,868 |
| 135 | | | 324 | | Accessory Electric Equipment | 2,226,990 | | 1,354,112 | 1,353,449 |
| 136 | | | 324.01 | | Computer Hardware | 4,270,368 | | - | - |
| 137 | | | 324.02 | | Computer Software | 2,775,816 | | 2,121,290 | 2,163,769 |
| 138 | | | 324.03 | | Communication Equipment | 354,500 | | 30,621 | 33,233 |
| 139 | | | 325 | | Misc Power Plant Equipment | 1,606,860 | | 2,056,350 | 2,072,995 |
| 140 | | | 326 | | Asset Retirement Costs Nuclear Prod Plant | 134,219 | | 134,219 | 134,219 |
| 141 | **Total Nuclear Production Gross Plant** | | | | | 26,464,889 | | 24,142,355 | 24,279,115 |
| 142 | | | | | | | | | |
| 143 | | | | | | | | | |

| | A | B | C | D | E | R | S | T | U |
|---|---|---|---|---|---|---|---|---|---|
| 1 | **Public Service Company of New Mexico** | | | | | | | | |
| 2 | **Schedule H-7** | | | | | | | | |
| 3 | **Depreciation and Amortization Expense** | | | | | | | | |
| 4 | **Base Period Ending 6/30/2026** | | | | | | | | |
| 5 | **Test Period Ending 9/30/2028** | | | | | | | | |
| 6 | Link to WP Plant Lead Sheet | | | | | | | | |
| 7 | **Base Period data is historical Information from the Company's Books and Records.** | | | | | | | | |
| 8 | This schedule is sponsored by PNM Witness Gutierrez | | | | | | | | |
| 9 | Please see the Direct Testimony of PNM Witnesses Gutierrez for discussion of adjustments/changes to the Base Period, Test Period, and Linkage Data. | | | | | | | | |
| 10 | **Location** | **Location Number Note 7** | **FERC** | **Loc/FERC** | **FERC Description** | **Adjusted Base Period Ending Balance 6/30/2026** | **Reference** | **Linkage 1 Jul 26 - Jun 27** | **Linkage 2 Oct 26 - Sept 27** |
| 144 | **Solar Production** | | | | | | | | |
| 237 | **All - Solar** | | | | | | | | |
| 238 | | | 338.01 | | Land & Land Rights | - | | - | - |
| 239 | | | 338.02 | | Structures and Improvements | 9,133 | | 9,133 | 9,133 |
| 240 | | | 338.04 | | Solar Panels | 9,265,030 | | 9,265,030 | 9,265,030 |
| 241 | | | 338.05 | | Collector System | 343,386 | | 343,386 | 343,386 |
| 242 | | | 338.07 | | Solar Inverters | - | | 218,400 | 240,240 |
| 243 | | | 338.08 | | Other Accessory Electrical Equipment | 1,141,531 | | 855,522 | 826,921 |
| 244 | | | 338.09 | | Computer Hardware | 10,352 | | 10,352 | 10,352 |
| 245 | | | 338.10 | | Computer Software | - | | - | - |
| 246 | | | 338.11 | | Communication Equipment | 42,505 | | 42,505 | 42,505 |
| 247 | | | 338.12 | | Misc. Power Plant Equipment | 166,635 | | 166,635 | 166,635 |
| 248 | **Total Solar Production Gross Plant** | | | | | 10,978,573 | | 10,910,964 | 10,904,203 |
| 249 | | | | | | | | | |
| 250 | **Other Production** | | | | | | | | |
| 251 | | | | | | | | | |
| 252 | **Other Production - Gas:** | | | | | | | | |
| 339 | **All - Gas** | | 340 | | Land and Land Rights | - | | - | - |
| 340 | | | 340.1 | | Land - Right of Way | 70,625 | | 70,625 | 70,625 |
| 341 | | | 341 | | Structures and Improvements | 2,985,855 | | 2,988,361 | 2,988,844 |
| 342 | | | 342 | | Fuel Holders, Producers, Accessories | 3,968,174 | | 4,163,706 | 4,232,526 |
| 343 | | | 343 | | Prime Movers | - | | - | - |
| 344 | | | 344 | | Generators | 8,799,607 | | 8,866,653 | 8,907,762 |
| 345 | | | 345 | | Accessory Electric Equipment | 1,186,886 | | 1,262,004 | 1,301,635 |
| 346 | | | 345.01 | | Computer Hardware | 10,777 | | 10,777 | 8,083 |
| 347 | | | 345.02 | | Computer Software | 12,186 | | 9,749 | 9,749 |
| 348 | | | 345.03 | | Communication Equipment | 2,591 | | 2,591 | 2,591 |
| 349 | | | 346 | | Misc Power Plant Equipment | 1,518,376 | | 1,568,561 | 1,586,447 |
| 350 | | | 347 | | Asset Retirement Costs - Other Production | 222,304 | | 305,673 | 305,673 |
| 351 | **Total Other Production Plant - Gas** | | | | | 18,777,383 | | 19,248,700 | 19,413,935 |
| 352 | | | | | | | | | |
| 353 | | | | | | | | | |
| 354 | **Total Other Production Gross Plant** | | | | | **18,777,383** | | **30,159,664** | **30,318,138** |
| 355 | | | | | | | | | |
| 356 | **Total Gross Plant Production** | | | | | **63,804,508** | | **64,574,596** | **64,905,270** |
| 357 | | | | | | | | | |

| | A | B | C | D | E | R | S | T | U |
|---|---|---|---|---|---|---|---|---|---|
| 1 | **Public Service Company of New Mexico** | | | | | | | | |
| 2 | **Schedule H-7** | | | | | | | | |
| 3 | **Depreciation and Amortization Expense** | | | | | | | | |
| 4 | **Base Period Ending 6/30/2026** | | | | | | | | |
| 5 | **Test Period Ending 9/30/2028** | | | | | | | | |
| 6 | Link to WP Plant Lead Sheet | | | | | | | | |
| 7 | **Base Period data is historical Information from the Company's Books and Records.** | | | | | | | | |
| 8 | This schedule is sponsored by PNM Witness Gutierrez | | | | | | | | |
| 9 | Please see the Direct Testimony of PNM Witnesses Gutierrez for discussion of adjustments/changes to the Base Period, Test Period, and Linkage Data. | | | | | | | | |
| 10 | **Location** | **Location Number Note 7** | **FERC** | **Loc/FERC** | **FERC Description** | **Adjusted Base Period Ending Balance 6/30/2026** | **Reference** | **Linkage 1 Jul 26 - Jun 27** | **Linkage 2 Oct 26 - Sept 27** |
| 358 | | | | | | | | | |
| 359 | **Total Gross Energy Storage Plant** | | | | | | | | |
| 386 | **All - Energy Storage** | | 387.01 | 387.01 | Land & Land Rights | - | | - | - |
| 387 | | | 387.02 | 387.02 | Structures & Improvements | 717,693 | | 717,693 | 717,693 |
| 388 | | | 387.03 | 387.03 | Energy Storage Equipment | 1,023,709 | | 1,646,515 | 2,308,154 |
| 389 | | | 387.05 | 387.05 | Collector System | 793,475 | | 793,475 | 793,475 |
| 390 | | | 387.06 | 387.06 | Generator Step-Up Transformers (GSU) | 1,831,676 | | 1,831,676 | 1,831,676 |
| 391 | | | 387.07 | 387.07 | Inverters | - | | - | - |
| 392 | | | 387.08 | 387.08 | Computer Hardware | 1,069,628 | | 1,069,628 | 1,069,628 |
| 393 | | | 387.09 | 387.09 | Computer Software | 193,030 | | 154,424 | 154,424 |
| 394 | | | 387.10 | 387.10 | Communication Equipment | 38,196 | | 38,196 | 38,196 |
| 395 | | | 387.11 | 387.11 | Misc. Energy Storage Equipment | 242,688 | | 242,688 | 242,688 |
| 396 | | | 387.12 | 387.12 | Asset Retirement Costs for Energy Storage | - | | - | - |
| 397 | **Total Gross Battery Storage Plant** | | | | | 5,910,095 | | 6,494,295 | 7,155,934 |
| 398 | | | | | | | | | |
| 399 | | | | | | | | | |
| 400 | **Gross Plant Transmission Plant** | | | | | | | | |
| 401 | | | | | | | | | |
| 453 | **All - Transmission** | | | | | | | | |
| 454 | | | 350 | | Land and Land Rights | - | | - | - |
| 455 | | | 350.1 | | Land - Right of Way | 505,141 | | 511,997 | 512,772 |
| 456 | | | 351.01 | | Computer Hardware | 3,471,231 | | 3,492,041 | 3,515,853 |
| 457 | | | 351.02 | | Computer Software | 1,856,975 | | 1,435,270 | 1,426,563 |
| 458 | | | 351.03 | | Communication Equipment | 3,149,842 | | 3,295,255 | 3,382,389 |
| 459 | | | 352 | | Structures and Improvements | 4,581,022 | | 4,772,420 | 4,879,799 |
| 460 | | | 353 | | Station Equipment | 26,827,556 | | 27,600,117 | 28,186,892 |
| 461 | | | 353.1 | | Station Equipment - Step-up Xfmr and Aux | 339,881 | | 340,497 | 340,555 |
| 462 | | | 354 | | Towers and Fixtures | 797,135 | | 797,012 | 796,678 |
| 463 | | | 355 | | Poles and Fixtures | 18,788,569 | | 18,897,761 | 18,985,136 |
| 464 | | | 356 | | Overhead Conductors and Devices | 5,677,206 | | 5,735,818 | 5,768,722 |
| 465 | | | 357 | | Underground Conduit | 3,525 | | 8,502 | 11,106 |
| 466 | | | 359 | | Roads and Trails | 143,706 | | 143,698 | 143,694 |
| 467 | **Total Gross Plant Transmission Plant** | | | | | 66,141,789 | | 67,030,391 | 67,950,160 |
| 468 | | | | | | | | | |
| 469 | | | | | | | | | |

| | A | B | C | D | E | R | S | T | U |
|---|---|---|---|---|---|---|---|---|---|
| 1 | **Public Service Company of New Mexico** | | | | | | | | |
| 2 | **Schedule H-7** | | | | | | | | |
| 3 | **Depreciation and Amortization Expense** | | | | | | | | |
| 4 | **Base Period Ending 6/30/2026** | | | | | | | | |
| 5 | **Test Period Ending 9/30/2028** | | | | | | | | |
| 6 | Link to WP Plant Lead Sheet | | | | | | | | |
| 7 | **Base Period data is historical Information from the Company's Books and Records.** | | | | | | | | |
| 8 | This schedule is sponsored by PNM Witness Gutierrez | | | | | | | | |
| 9 | Please see the Direct Testimony of PNM Witnesses Gutierrez for discussion of adjustments/changes to the Base Period, Test Period, and Linkage Data. | | | | | | | | |
| 10 | **Location** | **Location Number Note 7** | **FERC** | **Loc/FERC** | **FERC Description** | **Adjusted Base Period Ending Balance 6/30/2026** | **Reference** | **Linkage 1 Jul 26 - Jun 27** | **Linkage 2 Oct 26 - Sept 27** |
| 470 | | | | | | | | | |
| 471 | **Gross Plant Distribution Plant** | | | | | | | | |
| 665 | **All - Distribution** | | | | | | | | |
| 666 | | | 360 | | Land and Land Rights | - | | - | - |
| 667 | | | 360.1 | | Land - Right of Way | 19,092 | | 32,242 | 36,944 |
| 668 | | | 361 | | Structures and Improvements | 1,262,423 | | 1,289,757 | 1,305,473 |
| 669 | | | 362 | | Station Equipment | 8,344,463 | | 8,819,488 | 9,205,720 |
| 670 | | | 363.01 | | Computer Hardware | 1,535,954 | | 2,423,902 | 2,945,602 |
| 671 | | | 363.02 | | Computer Software | 10,418,547 | | 7,996,370 | 8,626,837 |
| 672 | | | 363.03 | | Communication Equipment | 1,229,260 | | 1,659,477 | 1,904,447 |
| 673 | | | 364 | | Poles, Towers and Fixtures | 19,563,639 | | 20,583,752 | 21,029,717 |
| 674 | | | 365 | | Overhead Conductors and Devices | 11,487,369 | | 12,420,161 | 12,860,636 |
| 675 | | | 366 | | Underground Conduit | 3,777,715 | | 3,924,089 | 3,997,567 |
| 676 | | | 367 | | Underground Conductors and Devices | 10,794,051 | | 11,113,641 | 11,266,541 |
| 677 | | | 368 | | Line Transformers | 6,982,162 | | 7,075,215 | 7,131,549 |
| 678 | | | 369 | | Services | 3,165,040 | | 3,249,905 | 3,287,995 |
| 679 | | | 369.1 | | Services - Underground | 5,324,347 | | 5,598,160 | 5,722,352 |
| 680 | | | 370 | | Meters | 3,189,794 | | 3,135,712 | 3,028,569 |
| 681 | | | 370.4 | | Meters - Grid Mod | 10,533 | | 858,691 | 1,424,804 |
| 682 | | | 371 | | Installations on Customers' Premises | 181,649 | | 181,649 | 181,649 |
| 683 | | | 371.1 | | Leased Flood Lighting | 7,442 | | 7,442 | 7,442 |
| 684 | | | 373 | | Street Lighting and Signal Systems | 884,929 | | 938,273 | 968,714 |
| 685 | | | 374 | | Asset Retirement Costs - Distribution | 126 | | - | - |
| 686 | **Total Gross Plant Distribution Plant** | | | | | 88,178,533 | | 91,307,927 | 94,932,558 |
| 687 | | | | | | | | | |

| | A | B | C | D | E | R | S | T | U |
|---|---|---|---|---|---|---|---|---|---|
| 1 | **Public Service Company of New Mexico** | | | | | | | | |
| 2 | **Schedule H-7** | | | | | | | | |
| 3 | **Depreciation and Amortization Expense** | | | | | | | | |
| 4 | **Base Period Ending 6/30/2026** | | | | | | | | |
| 5 | **Test Period Ending 9/30/2028** | | | | | | | | |
| 6 | Link to WP Plant Lead Sheet | | | | | | | | |
| 7 | **Base Period data is historical Information from the Company's Books and Records.** | | | | | | | | |
| 8 | This schedule is sponsored by PNM Witness Gutierrez | | | | | | | | |
| 9 | Please see the Direct Testimony of PNM Witnesses Gutierrez for discussion of adjustments/changes to the Base Period, Test Period, and Linkage Data. | | | | | | | | |
| 10 | **Location** | **Location Number Note 7** | **FERC** | **Loc/FERC** | **FERC Description** | **Adjusted Base Period Ending Balance 6/30/2026** | **Reference** | **Linkage 1 Jul 26 - Jun 27** | **Linkage 2 Oct 26 - Sept 27** |
| 688 | | | | | | | | | |
| 689 | **Gross Plant G&I Plant (303,389-399)** | | | | | | | | |
| 719 | **Total General & Intangible Plant** | | | | | | | | |
| 720 | | | 303 | | Miscellaneous Intangible Plant | - | | - | - |
| 721 | | | 389 | | Land and Land Rights | - | | - | - |
| 722 | | | 390 | | Structures and Improvements | 1,389,725 | | 1,410,362 | 1,427,237 |
| 723 | | | 390.1 | | Bulk Power Office Building Remodeling | 11,330 | | 11,309 | 11,298 |
| 724 | | | 390.2 | | Bulk Power Office Building | - | | - | - |
| 725 | | | 391 | | Office Furniture and Equipment | 247,759 | | 251,112 | 252,348 |
| 726 | | | 391.1 | | Office Furniture and Equipment - PC System | - | | - | - |
| 727 | | | 391.2 | | Office Furniture and Equipment - PC's | - | | - | - |
| 728 | | | 391.3 | | Computer Hardware | - | | - | - |
| 729 | | | 391.5 | | Computer Hardware - Solar | - | | - | - |
| 730 | | | 391.7 | | Computer Hardware | - | | - | - |
| 731 | | | 392 | | Transportation Equipment - Light | 227,311 | | 237,513 | 242,217 |
| 732 | | | 392.1 | | Transportation Equipment - Heavy | 244,345 | | 240,924 | 238,951 |
| 733 | | | 392.2 | | Transportation Equipment - Trailers | 284,255 | | 285,230 | 285,715 |
| 734 | | | 392.4 | | Transportation Equipment - Leaseback | - | | - | - |
| 735 | | | 393 | | Stores Equipment | 6,529 | | 6,529 | 6,529 |
| 736 | | | 394 | | Tools, Shop & Garage Equipment | 1,002,987 | | 1,030,271 | 1,036,890 |
| 737 | | | 395 | | Laboratory Equipment | 20,627 | | 20,627 | 20,627 |
| 738 | | | 396 | | Power Operated Equipment | 203,890 | | 204,898 | 205,391 |
| 739 | | | 397.01 | | Computer Hardware | 477,285 | | 324,838 | 248,540 |
| 740 | | | 397.02 | | Computer Software | 7,070,350 | | 3,466,279 | 3,462,200 |
| 741 | | | 397.03 | | Communication Equipment | - | | - | - |
| 742 | | | 398 | | Miscellaneous Equipment | 118,559 | | 119,073 | 119,815 |
| 743 | | | 399.1 | | ARO General Plant-1 | 313 | | 315 | 315 |
| 744 | **Total Gross Plant G&I Plant - PNM** | | | | | 11,305,263 | | 7,609,279 | 7,558,074 |
| 745 | | | | | | | | | |
| 746 | **Total Electric Plant In Service** | | 101/106 | | | 235,340,188 | | 237,016,488 | 242,501,996 |
| 747 | | | | | | | | | |
| 748 | **Electric Plant Purchased** | | 102 | | | - | | - | - |
| 749 | | | | | | | | | |
| 750 | **Electric Plant Acquisition Adjustment** | | | | Acq. Adj. - Palo Verde Unit 1&2 (Drexel) | - | | - | - |
| 751 | | | | | Acq. Adj. - Palo Verde Unit 2 (First Chicago) | 832,053 | | 832,053 | 832,053 |
| 752 | | | | | Acq. Adj. - (EIP) | 292,984 | | - | - |
| 753 | **Electric Plant Acquisition Adjustment** | | 114 | | | 1,125,037 | | 832,053 | 832,053 |
| 754 | | | | | | | | | |
| 755 | **Total Electric Plant** | | | | | 236,465,225 | | 237,848,542 | 243,334,049 |
| 756 | | | | | | | | | |

| | A | B | C | D | E | R | S | T | U |
|---|---|---|---|---|---|---|---|---|---|
| 1 | **Public Service Company of New Mexico** | | | | | | | | |
| 2 | **Schedule H-7** | | | | | | | | |
| 3 | **Depreciation and Amortization Expense** | | | | | | | | |
| 4 | **Base Period Ending 6/30/2026** | | | | | | | | |
| 5 | **Test Period Ending 9/30/2028** | | | | | | | | |
| 6 | Link to WP Plant Lead Sheet | | | | | | | | |
| 7 | **Base Period data is historical Information from the Company's Books and Records.** | | | | | | | | |
| 8 | This schedule is sponsored by PNM Witness Gutierrez | | | | | | | | |
| 9 | Please see the Direct Testimony of PNM Witnesses Gutierrez for discussion of adjustments/changes to the Base Period, Test Period, and Linkage Data. | | | | | | | | |
| 10 | **Location** | **Location Number Note 7** | **FERC** | **Loc/FERC** | **FERC Description** | **Adjusted Base Period Ending Balance 6/30/2026** | **Reference** | **Linkage 1 Jul 26 - Jun 27** | **Linkage 2 Oct 26 - Sept 27** |
| 757 | | | | | | | | | |
| 758 | **Corporate Unallocated** | 900 | 303 | 900303 | Miscellaneous Intangible Plant | - | | - | - |
| 759 | | 900 | 389 | 900389 | Land and Land Rights | - | | - | - |
| 760 | | 900 | 390 | 900390 | Structures and Improvements | 1,690,606 | | 1,441,827 | 1,482,112 |
| 761 | | 900 | 390.1 | 900390.1 | Bulk Power Office Building Remodeling | - | | - | - |
| 762 | | 900 | 390.2 | 900390.2 | Bulk Power Office Building | - | | - | - |
| 763 | | 900 | 391 | 900391 | Office Furniture and Equipment | 67,928 | | 64,419 | 70,583 |
| 764 | | 900 | 391.1 | 900391.1 | Office Furniture and Equipment - PC System | - | | - | - |
| 765 | | 900 | 391.2 | 900391.2 | Office Furniture and Equipment - PC's | - | | - | - |
| 766 | | 900 | 391.3 | 900391.3 | Computer Hardware | - | | - | - |
| 767 | | 900 | 391.5 | 900391.5 | Computer Hardware - Solar | - | | - | - |
| 768 | | 900 | 391.7 | 900391.7 | Computer Hardware | - | | - | - |
| 769 | | 900 | 392 | 900392 | Transportation Equipment - Light | 24,304 | | 17,991 | 17,991 |
| 770 | | 900 | 392.1 | 900392.1 | Transportation Equipment - Heavy | 3,289 | | 2,539 | 2,539 |
| 771 | | 900 | 392.2 | 900392.2 | Transportation Equipment - Trailers | 463 | | 343 | 343 |
| 772 | | 900 | 392.4 | 900392.4 | Transportation Equipment - Leaseback | - | | (3) | (4) |
| 773 | | 900 | 393 | 900393 | Stores Equipment | - | | - | - |
| 774 | | 900 | 394 | 900394 | Tools, Shop & Garage Equipment | 39,673 | | 29,660 | 27,416 |
| 775 | | 900 | 395 | 900395 | Laboratory Equipment | - | | - | - |
| 776 | | 900 | 396 | 900396 | Power Operated Equipment | 932 | | 719 | 719 |
| 777 | | 900 | 397 | 900397 | Communication Equipment | - | | - | - |
| 778 | | 900 | 397.01 | 900397.01 | Computer Hardware | 9,977,695 | | 7,535,478 | 7,174,702 |
| 779 | | 900 | 397.02 | 900397.02 | Computer Software | 53,272,608 | | 30,444,853 | 31,276,281 |
| 780 | | 900 | 397.03 | 900397.03 | Communication Equipment | 1,377,262 | | 1,019,514 | 953,061 |
| 781 | | 900 | 397.2 | 900397.2 | Communication Equipment | - | | - | - |
| 782 | | 900 | 397.3 | 900397.3 | Communication Equipment | - | | - | - |
| 783 | | 900 | 398 | 900398 | Miscellaneous Equipment | - | | - | - |
| 784 | | 900 | 399.1 | 900399.1 | ARO General Plant-1 | - | | - | - |
| 785 | | | | | | | | | |
| 786 | **Total Gross Plant Corporate Plant** | | | | | 66,454,758 | | 40,557,340 | 41,005,742 |
| 787 | | | | | | | | | |
| 788 | **Total Electric Plant In Service** | | 101/106 | | | 301,794,946 | | 277,573,829 | 283,507,739 |
| 789 | | | | | | | | | |
| 790 | **Electric Plant Purchased** | | 102 | | | - | | - | - |
| 791 | | | | | | | | | |
| 792 | **Electric Plant Acq. Adj.** | | 114 | | | 1,125,037 | | 832,053 | 832,053 |
| 793 | | | | | | | | | |
| 794 | **Total Electric Plant** | | | | | 302,919,983 | | 278,405,882 | 284,339,792 |

| | A | B | C | D | E | V | W | X | Y |
|---|---|---|---|---|---|---|---|---|---|
| 1 | **Public Service Company of New Mexico** | | | | | | | | |
| 2 | **Schedule H-7** | | | | | | | | |
| 3 | **Depreciation and Amortization Expense** | | | | | | | | |
| 4 | **Base Period Ending 6/30/2026** | | | | | | | | |
| 5 | **Test Period Ending 9/30/2028** | | | | | | | | |
| 6 | Link to WP Plant Lead Sheet | | | | | | | | |
| 7 | **Base Period data is historical Information from the Company's Books and Records.** | | | | | | | | |
| 8 | This schedule is sponsored by PNM Witness Gutierrez | | | | | | | | |
| 9 | Please see the Direct Testimony of PNM Witnesses Gutierrez for discussion of adjustments/changes to the Base Period, Test Period, and Linkage Data. | | | | | | | | |
| 10 | **Location** | **Location Number Note 7** | **FERC** | **Loc/FERC** | **FERC Description** | **Unadjusted Test Period Total** | **Shared Service Allocation Note 5** | **Test Period Total** | **Adjusted Base and Test Period Variance** |
| 11 | | | | | | | | | |
| 12 | **Gross Plant Production Plant** | | | | | | | | |
| 13 | **Steam Production** | | | | | | | | |
| 56 | **All - Steam** | | | | | | | | |
| 57 | | | 310 | | Land and Land Rights | - | | - | - |
| 58 | | | 310.1 | | Land Right of Way | 333 | | 333 | (34) |
| 59 | | | 311 | | Structures & Improvements | 688,132 | | 688,132 | 344,122 |
| 60 | | | 312 | | Boiler Plant Equipment | 3,485,247 | | 3,485,247 | 351,739 |
| 61 | | | 314 | | Turbogenerator Units | 1,548,431 | | 1,548,431 | (1,020,068) |
| 62 | | | 315 | | Accessory Electric Equipment | 356,695 | | 356,695 | (349,224) |
| 63 | | | 315.01 | | Computer Hardware | - | | - | - |
| 64 | | | 315.02 | | Computer Software | 201,134 | | 201,134 | (71,316) |
| 65 | | | 315.03 | | Communication Equipment | 23,155 | | 23,155 | 884 |
| 66 | | | 316 | | Misc Power Plant Equipment | 712,518 | | 712,518 | 282,589 |
| 67 | | | 317 | | Asset Retirement Costs - Steam | (113,881) | | (113,881) | (220,595) |
| 68 | **Total Steam Production Gross Plant** | | | | | 6,901,761 | - | 6,901,761 | (681,902) |
| 69 | | | | | | | | | |
| 70 | | | | | | | | | |
| 71 | **Nuclear Production** | | | | | | | | |
| 129 | **All - Nuclear** | | | | | | | | |
| 130 | | | 320 | | Land and Land Rights | - | | - | - |
| 131 | | | 320.1 | | Land - Right of Way | 699 | | 699 | (99,916) |
| 132 | | | 321 | | Structures and Improvements | 5,187,902 | | 5,187,902 | 1,156,788 |
| 133 | | | 322 | | Reactor Plant Equipment | 9,105,674 | | 9,105,674 | 1,079,552 |
| 134 | | | 323 | | Turbogenerator Units | 3,003,801 | | 3,003,801 | 65,516 |
| 135 | | | 324 | | Accessory Electric Equipment | 966,206 | | 966,206 | (1,260,784) |
| 136 | | | 324.01 | | Computer Hardware | - | | - | (4,270,368) |
| 137 | | | 324.02 | | Computer Software | 2,477,056 | | 2,477,056 | (298,760) |
| 138 | | | 324.03 | | Communication Equipment | 42,702 | | 42,702 | (311,798) |
| 139 | | | 325 | | Misc Power Plant Equipment | 2,215,866 | | 2,215,866 | 609,006 |
| 140 | | | 326 | | Asset Retirement Costs Nuclear Prod Plant | 134,219 | | 134,219 | (0) |
| 141 | **Total Nuclear Production Gross Plant** | | | | | 23,134,125 | - | 23,134,125 | (3,330,763) |
| 142 | | | | | | | | | |
| 143 | | | | | | | | | |

| | A | B | C | D | E | V | W | X | Y |
|---|---|---|---|---|---|---|---|---|---|
| 1 | **Public Service Company of New Mexico** | | | | | | | | |
| 2 | **Schedule H-7** | | | | | | | | |
| 3 | **Depreciation and Amortization Expense** | | | | | | | | |
| 4 | **Base Period Ending 6/30/2026** | | | | | | | | |
| 5 | **Test Period Ending 9/30/2028** | | | | | | | | |
| 6 | Link to WP Plant Lead Sheet | | | | | | | | |
| 7 | **Base Period data is historical Information from the Company's Books and Records.** | | | | | | | | |
| 8 | This schedule is sponsored by PNM Witness Gutierrez | | | | | | | | |
| 9 | Please see the Direct Testimony of PNM Witnesses Gutierrez for discussion of adjustments/changes to the Base Period, Test Period, and Linkage Data. | | | | | | | | |
| 10 | **Location** | **Location Number Note 7** | **FERC** | **Loc/FERC** | **FERC Description** | **Unadjusted Test Period Total** | **Shared Service Allocation Note 5** | **Test Period Total** | **Adjusted Base and Test Period Variance** |
| 144 | **Solar Production** | | | | | | | | |
| 237 | **All - Solar** | | | | | | | | |
| 238 | | | 338.01 | | Land & Land Rights | - | | - | - |
| 239 | | | 338.02 | | Structures and Improvements | 9,133 | | 9,133 | - |
| 240 | | | 338.04 | | Solar Panels | 14,686,888 | | 14,686,888 | 5,421,858 |
| 241 | | | 338.05 | | Collector System | 314,607 | | 314,607 | (28,779) |
| 242 | | | 338.07 | | Solar Inverters | 722,827 | | 722,827 | 722,827 |
| 243 | | | 338.08 | | Other Accessory Electrical Equipment | 827,993 | | 827,993 | (313,537) |
| 244 | | | 338.09 | | Computer Hardware | 9,969 | | 9,969 | (383) |
| 245 | | | 338.10 | | Computer Software | - | | - | - |
| 246 | | | 338.11 | | Communication Equipment | 35,719 | | 35,719 | (6,786) |
| 247 | | | 338.12 | | Misc. Power Plant Equipment | 165,937 | | 165,937 | (698) |
| 248 | **Total Solar Production Gross Plant** | | | | | 16,773,074 | - | 16,773,074 | 5,794,501 |
| 249 | | | | | | | | | |
| 250 | **Other Production** | | | | | | | | |
| 251 | | | | | | | | | |
| 252 | **Other Production - Gas:** | | | | | | | | |
| 339 | **All - Gas** | | 340 | | Land and Land Rights | - | | - | - |
| 340 | | | 340.1 | | Land - Right of Way | 75,450 | | 75,450 | 4,825 |
| 341 | | | 341 | | Structures and Improvements | 2,903,573 | | 2,903,573 | (82,282) |
| 342 | | | 342 | | Fuel Holders, Producers, Accessories | 4,726,408 | | 4,726,408 | 758,234 |
| 343 | | | 343 | | Prime Movers | - | | - | - |
| 344 | | | 344 | | Generators | 11,196,443 | | 11,196,443 | 2,396,836 |
| 345 | | | 345 | | Accessory Electric Equipment | 1,781,710 | | 1,781,710 | 594,824 |
| 346 | | | 345.01 | | Computer Hardware | - | | - | (10,777) |
| 347 | | | 345.02 | | Computer Software | 812 | | 812 | (11,374) |
| 348 | | | 345.03 | | Communication Equipment | 2,579 | | 2,579 | (12) |
| 349 | | | 346 | | Misc Power Plant Equipment | 2,282,203 | | 2,282,203 | 763,827 |
| 350 | | | 347 | | Asset Retirement Costs - Other Production | 305,673 | | 305,673 | 83,369 |
| 351 | **Total Other Production Plant - Gas** | | | | | 23,274,853 | - | 23,274,853 | 4,497,471 |
| 352 | | | | | | | | | |
| 353 | | | | | | | | | |
| 354 | **Total Other Production Gross Plant** | | | | | **40,047,927** | **-** | **40,047,927** | **10,291,971** |
| 355 | | | | | | | | | |
| 356 | **Total Gross Plant Production** | | | | | **70,083,814** | **-** | **70,083,814** | **6,279,306** |
| 357 | | | | | | | | | |

| | A | B | C | D | E | V | W | X | Y |
|---|---|---|---|---|---|---|---|---|---|
| 1 | **Public Service Company of New Mexico** | | | | | | | | |
| 2 | **Schedule H-7** | | | | | | | | |
| 3 | **Depreciation and Amortization Expense** | | | | | | | | |
| 4 | **Base Period Ending 6/30/2026** | | | | | | | | |
| 5 | **Test Period Ending 9/30/2028** | | | | | | | | |
| 6 | Link to WP Plant Lead Sheet | | | | | | | | |
| 7 | **Base Period data is historical Information from the Company's Books and Records.** | | | | | | | | |
| 8 | This schedule is sponsored by PNM Witness Gutierrez | | | | | | | | |
| 9 | Please see the Direct Testimony of PNM Witnesses Gutierrez for discussion of adjustments/changes to the Base Period, Test Period, and Linkage Data. | | | | | | | | |
| 10 | **Location** | **Location Number Note 7** | **FERC** | **Loc/FERC** | **FERC Description** | **Unadjusted Test Period Total** | **Shared Service Allocation Note 5** | **Test Period Total** | **Adjusted Base and Test Period Variance** |
| 358 | | | | | | | | | |
| 359 | **Total Gross Energy Storage Plant** | | | | | | | | |
| 386 | **All - Energy Storage** | | 387.01 | 387.01 | Land & Land Rights | - | | - | - |
| 387 | | | 387.02 | 387.02 | Structures & Improvements | 1,223,705 | | 1,223,705 | 506,012 |
| 388 | | | 387.03 | 387.03 | Energy Storage Equipment | 10,023,386 | | 10,023,386 | 8,999,677 |
| 389 | | | 387.05 | 387.05 | Collector System | 1,352,917 | | 1,352,917 | 559,442 |
| 390 | | | 387.06 | 387.06 | Generator Step-Up Transformers (GSU) | 3,123,105 | | 3,123,105 | 1,291,429 |
| 391 | | | 387.07 | 387.07 | Inverters | - | | - | - |
| 392 | | | 387.08 | 387.08 | Computer Hardware | 877,650 | | 877,650 | (191,978) |
| 393 | | | 387.09 | 387.09 | Computer Software | 154,424 | | 154,424 | (38,606) |
| 394 | | | 387.10 | 387.10 | Communication Equipment | 91,369 | | 91,369 | 53,173 |
| 395 | | | 387.11 | 387.11 | Misc. Energy Storage Equipment | 530,954 | | 530,954 | 288,265 |
| 396 | | | 387.12 | 387.12 | Asset Retirement Costs for Energy Storage | - | | - | - |
| 397 | **Total Gross Battery Storage Plant** | | | | | 17,377,509 | - | 17,377,509 | 11,467,414 |
| 398 | | | | | | | | | |
| 399 | | | | | | | | | |
| 400 | **Gross Plant Transmission Plant** | | | | | | | | |
| 401 | | | | | | | | | |
| 453 | **All - Transmission** | | | | | | | | |
| 454 | | | 350 | | Land and Land Rights | - | | - | - |
| 455 | | | 350.1 | | Land - Right of Way | 513,923 | | 513,923 | 8,782 |
| 456 | | | 351.01 | | Computer Hardware | 4,942,647 | | 4,942,647 | 1,471,417 |
| 457 | | | 351.02 | | Computer Software | 1,479,662 | | 1,479,662 | (377,314) |
| 458 | | | 351.03 | | Communication Equipment | 3,881,966 | | 3,881,966 | 732,124 |
| 459 | | | 352 | | Structures and Improvements | 5,754,878 | | 5,754,878 | 1,173,856 |
| 460 | | | 353 | | Station Equipment | 29,354,722 | | 29,354,722 | 2,527,166 |
| 461 | | | 353.1 | | Station Equipment - Step-up Xfmr and Aux | 342,613 | | 342,613 | 2,732 |
| 462 | | | 354 | | Towers and Fixtures | 691,308 | | 691,308 | (105,827) |
| 463 | | | 355 | | Poles and Fixtures | 18,423,927 | | 18,423,927 | (364,643) |
| 464 | | | 356 | | Overhead Conductors and Devices | 5,933,882 | | 5,933,882 | 256,676 |
| 465 | | | 357 | | Underground Conduit | 18,144 | | 18,144 | 14,620 |
| 466 | | | 359 | | Roads and Trails | 148,292 | | 148,292 | 4,586 |
| 467 | **Total Gross Plant Transmission Plant** | | | | | 71,485,965 | - | 71,485,965 | 5,344,176 |
| 468 | | | | | | | | | |
| 469 | | | | | | | | | |

| | A | B | C | D | E | V | W | X | Y |
|---|---|---|---|---|---|---|---|---|---|
| 1 | **Public Service Company of New Mexico** | | | | | | | | |
| 2 | **Schedule H-7** | | | | | | | | |
| 3 | **Depreciation and Amortization Expense** | | | | | | | | |
| 4 | **Base Period Ending 6/30/2026** | | | | | | | | |
| 5 | **Test Period Ending 9/30/2028** | | | | | | | | |
| 6 | Link to WP Plant Lead Sheet | | | | | | | | |
| 7 | **Base Period data is historical Information from the Company's Books and Records.** | | | | | | | | |
| 8 | This schedule is sponsored by PNM Witness Gutierrez | | | | | | | | |
| 9 | Please see the Direct Testimony of PNM Witnesses Gutierrez for discussion of adjustments/changes to the Base Period, Test Period, and Linkage Data. | | | | | | | | |
| 10 | **Location** | **Location Number Note 7** | **FERC** | **Loc/FERC** | **FERC Description** | **Unadjusted Test Period Total** | **Shared Service Allocation Note 5** | **Test Period Total** | **Adjusted Base and Test Period Variance** |
| 470 | | | | | | | | | |
| 471 | **Gross Plant Distribution Plant** | | | | | | | | |
| 665 | **All - Distribution** | | | | | | | | |
| 666 | | | 360 | | Land and Land Rights | - | | - | - |
| 667 | | | 360.1 | | Land - Right of Way | 40,628 | | 40,628 | 21,536 |
| 668 | | | 361 | | Structures and Improvements | 1,626,951 | | 1,626,951 | 364,528 |
| 669 | | | 362 | | Station Equipment | 10,715,614 | | 10,715,614 | 2,371,150 |
| 670 | | | 363.01 | | Computer Hardware | 5,417,918 | | 5,417,918 | 3,881,963 |
| 671 | | | 363.02 | | Computer Software | 11,650,437 | | 11,650,437 | 1,231,890 |
| 672 | | | 363.03 | | Communication Equipment | 3,221,974 | | 3,221,974 | 1,992,715 |
| 673 | | | 364 | | Poles, Towers and Fixtures | 25,167,868 | | 25,167,868 | 5,604,229 |
| 674 | | | 365 | | Overhead Conductors and Devices | 15,297,241 | | 15,297,241 | 3,809,872 |
| 675 | | | 366 | | Underground Conduit | 4,530,484 | | 4,530,484 | 752,769 |
| 676 | | | 367 | | Underground Conductors and Devices | 12,013,498 | | 12,013,498 | 1,219,448 |
| 677 | | | 368 | | Line Transformers | 8,836,868 | | 8,836,868 | 1,854,706 |
| 678 | | | 369 | | Services | 4,301,899 | | 4,301,899 | 1,136,859 |
| 679 | | | 369.1 | | Services - Underground | 7,968,488 | | 7,968,488 | 2,644,141 |
| 680 | | | 370 | | Meters | 2,165,088 | | 2,165,088 | (1,024,706) |
| 681 | | | 370.4 | | Meters - Grid Mod | 3,686,559 | | 3,686,559 | 3,676,026 |
| 682 | | | 371 | | Installations on Customers' Premises | 183,159 | | 183,159 | 1,510 |
| 683 | | | 371.1 | | Leased Flood Lighting | 3,967 | | 3,967 | (3,475) |
| 684 | | | 373 | | Street Lighting and Signal Systems | 1,269,758 | | 1,269,758 | 384,829 |
| 685 | | | 374 | | Asset Retirement Costs - Distribution | - | | - | (126) |
| 686 | **Total Gross Plant Distribution Plant** | | | | | 118,098,399 | - | 118,098,399 | 29,919,865 |
| 687 | | | | | | | | | |

| | A | B | C | D | E | V | W | X | Y |
|---|---|---|---|---|---|---|---|---|---|
| 1 | **Public Service Company of New Mexico** | | | | | | | | |
| 2 | **Schedule H-7** | | | | | | | | |
| 3 | **Depreciation and Amortization Expense** | | | | | | | | |
| 4 | **Base Period Ending 6/30/2026** | | | | | | | | |
| 5 | **Test Period Ending 9/30/2028** | | | | | | | | |
| 6 | Link to WP Plant Lead Sheet | | | | | | | | |
| 7 | **Base Period data is historical Information from the Company's Books and Records.** | | | | | | | | |
| 8 | This schedule is sponsored by PNM Witness Gutierrez | | | | | | | | |
| 9 | Please see the Direct Testimony of PNM Witnesses Gutierrez for discussion of adjustments/changes to the Base Period, Test Period, and Linkage Data. | | | | | | | | |
| 10 | **Location** | **Location Number Note 7** | **FERC** | **Loc/FERC** | **FERC Description** | **Unadjusted Test Period Total** | **Shared Service Allocation Note 5** | **Test Period Total** | **Adjusted Base and Test Period Variance** |
| 688 | | | | | | | | | |
| 689 | **Gross Plant G&I Plant (303,389-399)** | | | | | | | | |
| 719 | **Total General & Intangible Plant** | | | | | | | | |
| 720 | | | 303 | | Miscellaneous Intangible Plant | - | | - | - |
| 721 | | | 389 | | Land and Land Rights | - | | - | - |
| 722 | | | 390 | | Structures and Improvements | 1,096,417 | | 1,096,417 | (293,308) |
| 723 | | | 390.1 | | Bulk Power Office Building Remodeling | 15,461 | | 15,461 | 4,131 |
| 724 | | | 390.2 | | Bulk Power Office Building | 14,681 | | 14,681 | 14,681 |
| 725 | | | 391 | | Office Furniture and Equipment | 143,848 | | 143,848 | (103,911) |
| 726 | | | 391.1 | | Office Furniture and Equipment - PC System | - | | - | - |
| 727 | | | 391.2 | | Office Furniture and Equipment - PC's | - | | - | - |
| 728 | | | 391.3 | | Computer Hardware | - | | - | - |
| 729 | | | 391.5 | | Computer Hardware - Solar | - | | - | - |
| 730 | | | 391.7 | | Computer Hardware | - | | - | - |
| 731 | | | 392 | | Transportation Equipment - Light | 378,899 | | 378,899 | 151,589 |
| 732 | | | 392.1 | | Transportation Equipment - Heavy | 160,165 | | 160,165 | (84,180) |
| 733 | | | 392.2 | | Transportation Equipment - Trailers | 218,547 | | 218,547 | (65,708) |
| 734 | | | 392.4 | | Transportation Equipment - Leaseback | - | | - | - |
| 735 | | | 393 | | Stores Equipment | 4,102 | | 4,102 | (2,427) |
| 736 | | | 394 | | Tools, Shop & Garage Equipment | 945,927 | | 945,927 | (57,059) |
| 737 | | | 395 | | Laboratory Equipment | 715 | | 715 | (19,911) |
| 738 | | | 396 | | Power Operated Equipment | 350,379 | | 350,379 | 146,489 |
| 739 | | | 397.01 | | Computer Hardware | 141,497 | | 141,497 | (335,788) |
| 740 | | | 397.02 | | Computer Software | 5,704,775 | | 5,704,775 | (1,365,574) |
| 741 | | | 397.03 | | Communication Equipment | - | | - | - |
| 742 | | | 398 | | Miscellaneous Equipment | 97,296 | | 97,296 | (21,262) |
| 743 | | | 399.1 | | ARO General Plant-1 | 315 | | 315 | 2 |
| 744 | **Total Gross Plant G&I Plant - PNM** | | | | | 9,273,025 | - | 9,273,025 | (2,032,238) |
| 745 | | | | | | | | | |
| 746 | **Total Electric Plant In Service** | | 101/106 | | | 286,318,711 | - | 286,318,711 | 50,978,524 |
| 747 | | | | | | | | | |
| 748 | **Electric Plant Purchased** | | 102 | | | - | - | - | - |
| 749 | | | | | | | | | |
| 750 | **Electric Plant Acquisition Adjustment** | | | | Acq. Adj. - Palo Verde Unit 1&2 (Drexel) | - | | - | - |
| 751 | | | | | Acq. Adj. - Palo Verde Unit 2 (First Chicago) | 832,053 | | 832,053 | - |
| 752 | | | | | Acq. Adj. - (EIP) | - | | - | (292,984) |
| 753 | **Electric Plant Acquisition Adjustment** | | 114 | | | 832,053 | - | 832,053 | (292,984) |
| 754 | | | | | | | | | |
| 755 | **Total Electric Plant** | | | | | 287,150,764 | - | 287,150,764 | 50,685,540 |
| 756 | | | | | | | | | |

| | A | B | C | D | E | V | W | X | Y |
|---|---|---|---|---|---|---|---|---|---|
| 1 | **Public Service Company of New Mexico** | | | | | | | | |
| 2 | **Schedule H-7** | | | | | | | | |
| 3 | **Depreciation and Amortization Expense** | | | | | | | | |
| 4 | **Base Period Ending 6/30/2026** | | | | | | | | |
| 5 | **Test Period Ending 9/30/2028** | | | | | | | | |
| 6 | Link to WP Plant Lead Sheet | | | | | | | | |
| 7 | **Base Period data is historical Information from the Company's Books and Records.** | | | | | | | | |
| 8 | This schedule is sponsored by PNM Witness Gutierrez | | | | | | | | |
| 9 | Please see the Direct Testimony of PNM Witnesses Gutierrez for discussion of adjustments/changes to the Base Period, Test Period, and Linkage Data. | | | | | | | | |
| 10 | **Location** | **Location Number Note 7** | **FERC** | **Loc/FERC** | **FERC Description** | **Unadjusted Test Period Total** | **Shared Service Allocation Note 5** | **Test Period Total** | **Adjusted Base and Test Period Variance** |
| 757 | | | | | | | | | |
| 758 | **Corporate Unallocated** | 900 | 303 | 900303 | Miscellaneous Intangible Plant | - | - | - | - |
| 759 | | 900 | 389 | 900389 | Land and Land Rights | - | - | - | - |
| 760 | | 900 | 390 | 900390 | Structures and Improvements | 1,600,078 | (434,198) | 1,165,880 | (524,726) |
| 761 | | 900 | 390.1 | 900390.1 | Bulk Power Office Building Remodeling | - | - | - | - |
| 762 | | 900 | 390.2 | 900390.2 | Bulk Power Office Building | - | - | - | - |
| 763 | | 900 | 391 | 900391 | Office Furniture and Equipment | 106,146 | (35,521) | 70,626 | 2,698 |
| 764 | | 900 | 391.1 | 900391.1 | Office Furniture and Equipment - PC System | - | - | - | - |
| 765 | | 900 | 391.2 | 900391.2 | Office Furniture and Equipment - PC's | - | - | - | - |
| 766 | | 900 | 391.3 | 900391.3 | Computer Hardware | - | - | - | - |
| 767 | | 900 | 391.5 | 900391.5 | Computer Hardware - Solar | - | - | - | - |
| 768 | | 900 | 391.7 | 900391.7 | Computer Hardware | - | - | - | - |
| 769 | | 900 | 392 | 900392 | Transportation Equipment - Light | 17,991 | (6,772) | 11,219 | (13,085) |
| 770 | | 900 | 392.1 | 900392.1 | Transportation Equipment - Heavy | 2,539 | (799) | 1,739 | (1,550) |
| 771 | | 900 | 392.2 | 900392.2 | Transportation Equipment - Trailers | 343 | (129) | 214 | (249) |
| 772 | | 900 | 392.4 | 900392.4 | Transportation Equipment - Leaseback | (11) | 4 | (7) | (7) |
| 773 | | 900 | 393 | 900393 | Stores Equipment | - | - | - | - |
| 774 | | 900 | 394 | 900394 | Tools, Shop & Garage Equipment | 21,736 | (7,742) | 13,994 | (25,678) |
| 775 | | 900 | 395 | 900395 | Laboratory Equipment | - | - | - | - |
| 776 | | 900 | 396 | 900396 | Power Operated Equipment | 719 | (226) | 493 | (439) |
| 777 | | 900 | 397 | 900397 | Communication Equipment | - | - | - | - |
| 778 | | 900 | 397.01 | 900397.01 | Computer Hardware | 6,326,114 | (2,138,366) | 4,187,748 | (5,789,947) |
| 779 | | 900 | 397.02 | 900397.02 | Computer Software | 38,436,042 | (12,360,758) | 26,075,284 | (27,197,324) |
| 780 | | 900 | 397.03 | 900397.03 | Communication Equipment | 663,222 | (249,637) | 413,585 | (963,676) |
| 781 | | 900 | 397.2 | 900397.2 | Communication Equipment | - | - | - | - |
| 782 | | 900 | 397.3 | 900397.3 | Communication Equipment | - | - | - | - |
| 783 | | 900 | 398 | 900398 | Miscellaneous Equipment | - | - | - | - |
| 784 | | 900 | 399.1 | 900399.1 | ARO General Plant-1 | - | - | - | - |
| 785 | | | | | | | | | |
| 786 | **Total Gross Plant Corporate Plant** | | | | | 47,174,920 | (15,234,144) | 31,940,776 | (34,513,982) |
| 787 | | | | | | | | | |
| 788 | **Total Electric Plant In Service** | | 101/106 | | | 333,493,631 | (15,234,144) | 318,259,487 | 16,464,541 |
| 789 | | | | | | | | | |
| 790 | **Electric Plant Purchased** | | 102 | | | - | - | - | - |
| 791 | | | | | | | | | |
| 792 | **Electric Plant Acq. Adj.** | | 114 | | | 832,053 | - | 832,053 | (292,984) |
| 793 | | | | | | | | | |
| 794 | **Total Electric Plant** | | | | | 334,325,684 | (15,234,144) | 319,091,540 | 16,171,558 |

| | A |
|---|---|
| 1 | **Public Service Company of New Mexico** |
| 2 | **Schedule H-7 (Notes)** |
| 3 | **Depreciation and Amortization Expense** |
| 4 | Link to WP Plant Lead Sheet |
| 5 | |
| 6 | **Note 1**: This adjustment reflects the imprudence impairment consistent with the final order in NMPRC Case No. 22-00270-UT. For GAAP accounting purposes, this impairment was recorded to FERC Account 116 "Other Electric Plant Adjustments"; however for regulatory purposes, this adjustment is reclassified into FERC Account 101, to properly remove the amounts from rate base. |
| 7 | **Note 2:** The Palo Verde Asset Retirement Costs, recorded in plant in service, are not included in rate base, as final decommissioning of PV are ultimately funded to an external trust, and recovery of decommissioning expense from PNM Retail customers are based on those funding amounts. This treatment is consistent with prior rate cases. |
| 8 | **Note 3**: Adjustment reflects reclassification of capital assets at the end of the Base Period associated with Palo Verde Leased Capacity. Leased Capacity assets approved to be recovered as through regulatory assets have been reclassified to the Regulatory Asset Workpapers. Assets associated with the sale of certain assets to SRP are removed to account for this sale transactions. This adjustment is consistent with the treatment in the Final Order of NMPRC Case No. 22-00270-UT. |
| 9 | **Note 4:** PNM Annualized base period depreciation expense by multiplying the June 2026 gross plant balance by the applicable annual depreciation rate that was approved in Case No. 22-00270-UT. The calculation takes base period ending balance and allocates Depreciation rate to determine the total of annualized depreciation. The total will then subtract the expense amount, and will calculate an adjustment (if necessary). |
| 10 | **Note 5**: Reflects capital investment on Shared Services that are allocated to subsidiaries other than PNM. See WP Plant - 8, columns T, U and V for Base Period allocation to PNM. The allocation of Shared Services is based on the 13-month average at the end of the Test Period. For the Test Period, the 13-month average was calculated on a total company basis prior to the allocation of assets to PNM. Please refer to WP Plant - 8, columns BD, BE and BF for Test Period allocation to PNM. |
| 11 | **Note 6**: FERC accounts 365 (Overhead Conductors and Devices), 366 (Underground Conduit) and 367 (Underground Conductors and Devices) are allocated between Primary and Secondary System Distribution based on conductor footage study. See WP Plant -1 for allocation percentages. Also see the Direct Testimony of PNM witness Gray for further discussion on the conductor footage study. This note relates to information grouped within the outline function and is not visible on the printed schedule. |
| 12 | **Note 7**: Information in Column B "Location Number" is utilized to identify the applicable depreciation rates. |
| 13 | **General Notes**: |
| 14 | Please see WP Plant - 1b for variance between Adjusted Base Period and Test Period and the depreciation change attributable to the change in depreciation rates. |
| 15 | The electronic version of this worksheet uses the Microsoft excel outline function. This function groups the elements of cost, and or columns for print formatting purposes. |

# PNM Schedule H-8

Taxes other than income taxes

| | A | B | C | D | E | F | G |
|---|---|---|---|---|---|---|---|
| 1 | **Public Service Company of New Mexico** | | | | | | |
| 2 | **Schedule H-8** | | | | | | |
| 3 | **Taxes Other Than Income Taxes** | | | | | | |
| 4 | **Base Period Ending 6/30/2026** | | | | | | |
| 5 | **Test Period Ending 9/30/2028** | | | | | | |
| 6 | **This schedule is sponsored by** | | | | | | |
| 7 | **PNM Witness Gutierrez** | | | | | | |
| 8 | | | | | | | |
| 9 | | | | **Note 1** | | **Note 1** | **Note 1** |
| 10 | **FERC Account 408.1** | **PNM Cost Type** | **Base Period** | **Base Period Adjustments** | **Adjusted Base Period** | **Linkage 1 Jul-26 - Jun-27** | **Linkage 2 Oct-26 - Sep-27** |
| 11 | | | | | | | |
| 12 | Property Taxes | | | | | | |
| 13 | New Mexico | 875 | 39,091,139 | 1,151,926 | 40,243,065 | 41,839,274 | 46,021,301 |
| 14 | Arizona | 877 | 4,308,344 | - | 4,308,344 | 3,559,005 | 3,557,277 |
| 15 | Total Property Taxes | | 43,399,483 | 1,151,926 | 44,551,409 | 45,398,280 | 49,578,578 |
| 16 | | | | | | | |
| 17 | Payroll Taxes | | | | | | |
| 18 | FICA (Note 2) | 883 | 7,411,195 | 3,167,730 | 10,578,925 | 7,880,981 | 8,042,857 |
| 19 | Federal Unemployment | 884 | 41,393 | - | 41,393 | - | - |
| 20 | State Unemployment | 885 | 532,853 | - | 532,853 | - | - |
| 21 | Payroll Tax Loading | 908 | (20,439) | - | (20,439) | - | - |
| 22 | Payroll Tax Loading | 913 | (3,705,887) | - | (3,705,887) | - | - |
| 23 | Payroll Tax Loading | 918 | (11,447) | - | (11,447) | - | - |
| 24 | Payroll Tax Loading | 937 | (199) | - | (199) | - | - |
| 25 | Payroll Tax Loading | 939 | (77) | - | (77) | - | - |
| 26 | Other Taxes and Fees Payroll Related | 600 | - | - | - | - | - |
| 27 | Other Taxes and Fees Payroll Related | 970 | - | - | - | - | - |
| 28 | Total Payroll Taxes | | 4,247,392 | 3,167,730 | 7,415,122 | 7,880,981 | 8,042,857 |
| 29 | | | | | | | |

| | A | B | C | D | E | F | G |
|---|---|---|---|---|---|---|---|
| 1 | **Public Service Company of New Mexico** | | | | | | |
| 2 | **Schedule H-8** | | | | | | |
| 3 | **Taxes Other Than Income Taxes** | | | | | | |
| 4 | **Base Period Ending 6/30/2026** | | | | | | |
| 5 | **Test Period Ending 9/30/2028** | | | | | | |
| 6 | **This schedule is sponsored by** | | | | | | |
| 7 | **PNM Witness Gutierrez** | | | | | | |
| 8 | | | | | | | |
| 9 | | | | **Note 1** | | **Note 1** | **Note 1** |
| 10 | **FERC Account 408.1** | **PNM Cost Type** | **Base Period** | **Base Period Adjustments** | **Adjusted Base Period** | **Linkage 1 Jul-26 - Jun-27** | **Linkage 2 Oct-26 - Sep-27** |
| 30 | Miscellaneous Taxes | | | | | | |
| 31 | Native American Taxes | 879 | 3,888,167 | - | 3,888,167 | 4,043,694 | 4,043,694 |
| 32 | Inspection and Supervision Fees | 888 | 6,624,597 | (6,624,597) | - | - | - |
| 33 | Taxes - Joint Projects | 391 | 2,143,380 | (62,892) | 2,080,488 | 2,163,708 | 2,163,708 |
| 34 | Workers Compensation | 450 | 9,081 | - | 9,081 | 9,444 | 9,444 |
| 35 | Gross Receipts Tax | 871 | 381 | (381) | - | - | - |
| 36 | Gross Receipts Tax | 880 | 90 | (90) | - | - | - |
| 37 | Compensating Tax | 882 | (18) | - | (18) | (19) | (19) |
| 38 | Franchise Fees | 490 | 800 | (800) | - | - | - |
| 39 | Franchise Fees | 872 | 5,900 | (5,900) | - | - | - |
| 40 | Franchise Fees | 887 | (12) | - | (12) | (13) | (13) |
| 41 | Other Taxes and Fees | 422 | - | - | - | - | - |
| 42 | Other Taxes and Fees | 560 | 85 | - | 85 | 88 | 88 |
| 43 | Other Taxes and Fees | 610 | - | - | - | - | - |
| 44 | Other Taxes and Fees | 889 | 42,340 | (42,340) | - | - | - |
| 45 | Other Taxes and Fees | 892 | 6,552 | - | 6,552 | 6,814 | 6,814 |
| 46 | Other Taxes and Fees | 897 | - | - | - | - | - |
| 47 | Other Taxes and Fees | 903 | (3,573) | - | (3,573) | (3,716) | (3,716) |
| 48 | Total Miscellaneous Taxes | | 12,717,769 | (6,737,000) | 5,980,770 | 6,220,001 | 6,220,001 |
| 49 | | | | | | | |
| 50 | **Total Taxes Other Than Income Taxes** | | 60,364,644 | (2,417,344) | 57,947,300 | 59,499,261 | 63,841,436 |

| | A | B | H | I | J |
|---|---|---|---|---|---|
| 1 | **Public Service Company of New Mexico** | | | | |
| 2 | **Schedule H-8** | | | | |
| 3 | **Taxes Other Than Income Taxes** | | | | |
| 4 | **Base Period Ending 6/30/2026** | | | | |
| 5 | **Test Period Ending 9/30/2028** | | | | |
| 6 | **This schedule is sponsored by** | | | | |
| 7 | **PNM Witness Gutierrez** | | | | |
| 8 | | | | | |
| 9 | | | **Note 1** | | |
| 10 | **FERC Account 408.1** | **PNM Cost Type** | **Test Period Oct-27 - Sep-28** | **Adjusted Base and Test Periods Variance** | **References** |
| 11 | | | | | |
| 12 | Property Taxes | | | | |
| 13 | New Mexico | 875 | 48,940,846 | 8,697,781 | |
| 14 | Arizona | 877 | 3,602,861 | (705,483) | |
| 15 | Total Property Taxes | | 52,543,707 | 7,992,298 | GT-1, Line 53 & WP COS Line 542 |
| 16 | | | | | |
| 17 | Payroll Taxes | | | | |
| 18 | FICA (Note 2) | 883 | 9,084,000 | (1,494,925) | |
| 19 | Federal Unemployment | 884 | - | (41,393) | |
| 20 | State Unemployment | 885 | - | (532,853) | |
| 21 | Payroll Tax Loading | 908 | - | 20,439 | |
| 22 | Payroll Tax Loading | 913 | - | 3,705,887 | |
| 23 | Payroll Tax Loading | 918 | - | 11,447 | |
| 24 | Payroll Tax Loading | 937 | - | 199 | |
| 25 | Payroll Tax Loading | 939 | - | 77 | |
| 26 | Other Taxes and Fees Payroll Related | 600 | - | - | |
| 27 | Other Taxes and Fees Payroll Related | 970 | - | - | |
| 28 | Total Payroll Taxes | | 9,084,000 | 1,668,878 | GT-1, Line 60 & WP COS Line 549 |
| 29 | | | | | |

| | A | B | H | I | J |
|---|---|---|---|---|---|
| 1 | **Public Service Company of New Mexico** | | | | |
| 2 | **Schedule H-8** | | | | |
| 3 | **Taxes Other Than Income Taxes** | | | | |
| 4 | **Base Period Ending 6/30/2026** | | | | |
| 5 | **Test Period Ending 9/30/2028** | | | | |
| 6 | **This schedule is sponsored by** | | | | |
| 7 | **PNM Witness Gutierrez** | | | | |
| 8 | | | | | |
| 9 | | | **Note 1** | | |
| 10 | **FERC Account 408.1** | **PNM Cost Type** | **Test Period Oct-27 - Sep-28** | **Adjusted Base and Test Periods Variance** | **References** |
| 30 | Miscellaneous Taxes | | | | |
| 31 | Native American Taxes | 879 | 4,205,441 | 317,274 | |
| 32 | Inspection and Supervision Fees | 888 | - | - | |
| 33 | Taxes - Joint Projects | 391 | 2,250,256 | 169,768 | |
| 34 | Workers Compensation | 450 | 9,822 | 741 | |
| 35 | Gross Receipts Tax | 871 | - | - | |
| 36 | Gross Receipts Tax | 880 | - | - | |
| 37 | Compensating Tax | 882 | (20) | (1) | |
| 38 | Franchise Fees | 490 | - | - | |
| 39 | Franchise Fees | 872 | - | - | |
| 40 | Franchise Fees | 887 | (13) | (1) | |
| 41 | Other Taxes and Fees | 422 | - | - | |
| 42 | Other Taxes and Fees | 560 | 92 | 7 | |
| 43 | Other Taxes and Fees | 610 | - | - | |
| 44 | Other Taxes and Fees | 889 | - | - | |
| 45 | Other Taxes and Fees | 892 | 7,087 | 535 | |
| 46 | Other Taxes and Fees | 897 | - | - | |
| 47 | Other Taxes and Fees | 903 | (3,864) | (292) | |
| 48 | Total Miscellaneous Taxes | | 6,468,801 | 488,031 | GT-1, Line 74 & WP COS Line 563 |
| 49 | | | | | |
| 50 | **Total Taxes Other Than Income Taxes** | | 68,096,507 | 10,149,207 | GT-1, Line 76 & WP COS Line 565 |

| | A |
|---|---|
| 1 | **Public Service Company of New Mexico** |
| 2 | **Schedule H-8** |
| 3 | **Taxes Other Than Income Taxes (Notes)** |
| 4 | **Base Period Ending 6/30/2026** |
| 5 | **Test Period Ending 9/30/2028** |
| 6 | **This schedule is sponsored by PNM Witness Gutierrez** |
| 7 | |
| 8 | Provides data to schedules/files (sheets): H-04-Base and Test.xlsx |
| 9 | Base Period data is historical information from the Company's Book Balance Amounts. |
| 10 | Note 1: Please refer to PNM Exhibit RNG-4 WP GT-1 for Base Period, Base Period adjustments, Linkage data and Test |
| 11 | Period information. |
| 12 | Note 2: For Linkage data and Test Period, FICA, Federal Unemployment and State Unemployment Payroll taxes are |
| 13 | aggregated and not calculated separately. Please refer to the testimony of PNM Witness Gutierrez for discussion on |
| 14 | payroll taxes. |

# PNM Schedule H-9

Federal and state income taxes

| | A | B | C |
|---|---|---|---|
| 1 | **Public Service Company of New Mexico** | | |
| 2 | **Schedule H-9** | | |
| 3 | **Federal and State Income Taxes** | | |
| 4 | **Base Period Ending 6/30/2026** | | |
| 5 | **Test Period Ending 9/30/2028** | | |
| 6 | **This schedule is sponsored by PNM Witness Morris** | | |
| 7 | | | |
| 8 | **Description** | **Unadjusted Base Period** | **Base Period Adjustments** |
| 9 | | | |
| 10 | Federal Income Tax | | |
| 11 | Revenues | 1,613,549,863 | (291,571,392) |
| 12 | | | |
| 13 | Less Expenses: | | |
| 14 | Interest Expense | 96,913,048 | (7,417,154) |
| 15 | Operating Expenses, Revenue Credits & Revenue Tax | 1,229,087,433 | (259,190,979) |
| 16 | Total Expenses | 1,326,000,481 | (266,608,133) |
| 17 | | | |
| 18 | Pre-Tax Income | 287,549,382 | (24,963,259) |
| 19 | | | |
| 20 | Federal Tax Adjustments | | |
| 21 | | | |
| 22 | Non-Deductible Meals | - | - |
| 23 | Non-Deductible Parking | 330,465 | - |
| 24 | PVNGS Gain Amortization | (39,828) | - |
| 25 | AFUDC - Equity | (10,614,782) | - |
| 26 | AFUDC - Equity - Renewables | (41,892) | - |
| 27 | AFUDC - Equity - Grid Mod | (79,282) | |
| 28 | Depreciation Flow Through | 2,819,235 | - |
| 29 | Gain or Loss Flow Through | 891,582 | - |
| 30 | Federal Grant Amortization - Renewables | (962,888) | - |
| 31 | Federal Grant Basis Adj. - Renewables | 481,444 | - |
| 32 | State Income Tax | (15,618,199) | 1,390,776 |
| 33 | Total Federal Tax Adjustments | (22,834,143) | 1,390,776 |

| | A | B | C |
|---|---|---|---|
| 1 | **Public Service Company of New Mexico** | | |
| 2 | **Schedule H-9** | | |
| 3 | **Federal and State Income Taxes** | | |
| 4 | **Base Period Ending 6/30/2026** | | |
| 5 | **Test Period Ending 9/30/2028** | | |
| 6 | **This schedule is sponsored by PNM Witness Morris** | | |
| 7 | | | |
| 8 | **Description** | **Unadjusted Base Period** | **Base Period Adjustments** |
| 34 | | | |
| 35 | Taxable Income | 264,715,239 | (23,572,482) |
| 36 | | | |
| 37 | Federal Tax Rate | 21.00% | 21.00% |
| 38 | | | |
| 39 | Federal Income Tax | 55,590,200 | (4,950,221) |
| 40 | | | |
| 41 | Adjustments to Tax: | | |
| 42 | TRA 1986 Excess Payroll Tax Reversal | (6,146) | - |
| 43 | TRA 1986 Excess ADFIT Reversal - Protected (ARAM) | (44,888) | - |
| 44 | TCJA 2017 Excess ADFIT Reversal - Protected (ARAM) | (7,849,272) | - |
| 45 | TCJA 2017 Excess ADFIT Reversal - Unprotected | (15,685,191) | - |
| 46 | NM 2017 Excess ADSIT Reversal - Unprotected | - | - |
| 47 | ITC Amortization - Generation | (169,377) | - |
| 48 | ITC Amortization - Renewable | - | - |
| 49 | R & D Credit | (1,538,462) | - |
| 50 | UTP (FIN 48) - Credits | - | - |
| 51 | Total Adjustments to Taxes | (25,293,335) | - |
| 52 | | | |
| 53 | **Net Allowable Federal Income Tax** | **30,296,865** | **(4,950,221)** |

| | A | B | C |
|---|---|---|---|
| 1 | **Public Service Company of New Mexico** | | |
| 2 | **Schedule H-9** | | |
| 3 | **Federal and State Income Taxes** | | |
| 4 | **Base Period Ending 6/30/2026** | | |
| 5 | **Test Period Ending 9/30/2028** | | |
| 6 | **This schedule is sponsored by PNM Witness Morris** | | |
| 7 | | | |
| 8 | **Description** | **Unadjusted Base Period** | **Base Period Adjustments** |
| 54 | | | |
| 55 | State Income Tax | | |
| 56 | Pre-Tax Income | 287,549,382 | (24,963,259) |
| 57 | Permanent and Flow-Through Differences | (7,215,944) | - |
| 58 | | | |
| 59 | State Taxable Income | 280,333,438 | (24,963,259) |
| 60 | | | |
| 61 | Effective State Tax Rate (Rate/(1+Rate)) | 5.57% | |
| 62 | | | |
| 63 | State Income Tax | 15,618,199 | (1,390,776) |
| 64 | | | |
| 65 | Adjustments to Tax: | | |
| 66 | New Mexico NOL Valuation Allowance | - | - |
| 67 | Amortization of Excess Deferred State Taxes | - | - |
| 68 | | | |
| 69 | **Net Allowable State Income Tax** | **15,618,199** | **(1,390,776)** |

| | A | D | E | F |
|---|---|---|---|---|
| 1 | **Public Service Company of New Mexico** | | | |
| 2 | **Schedule H-9** | | | |
| 3 | **Federal and State Income Taxes** | | | |
| 4 | **Base Period Ending 6/30/2026** | | | |
| 5 | **Test Period Ending 9/30/2028** | | | |
| 6 | **This schedule is sponsored by PNM Witness Morris** | | | |
| 7 | | | | |
| 8 | **Description** | **Adjusted Base Period** | **Adjusted Base to Test Period Variance** | **Test Period** |
| 9 | | | | |
| 10 | Federal Income Tax | | | |
| 11 | Revenues | 1,321,978,471 | 275,923,664 | 1,597,902,135 |
| 12 | | | | |
| 13 | Less Expenses: | | | |
| 14 | Interest Expense | 89,495,894 | 37,805,527 | 127,301,421 |
| 15 | Operating Expenses, Revenue Credits & Revenue Tax | 969,896,454 | 178,893,142 | 1,148,789,596 |
| 16 | Total Expenses | 1,059,392,348 | 216,698,669 | 1,276,091,017 |
| 17 | | | | |
| 18 | Pre-Tax Income | 262,586,123 | 59,224,995 | 321,811,118 |
| 19 | | | | |
| 20 | Federal Tax Adjustments | | | |
| 21 | | | | |
| 22 | Non-Deductible Meals | - | - | - |
| 23 | Non-Deductible Parking | 330,465 | - | 330,465 |
| 24 | PVNGS Gain Amortization | (39,828) | - | (39,828) |
| 25 | AFUDC - Equity | (10,614,782) | (16,149,751) | (26,764,533) |
| 26 | AFUDC - Equity - Renewables | (41,892) | 8,768 | (33,124) |
| 27 | AFUDC - Equity - Grid Mod | (79,282) | | (79,282) |
| 28 | Depreciation Flow Through | 2,819,235 | 26,618 | 2,845,854 |
| 29 | Gain or Loss Flow Through | 891,582 | 0 | 891,582 |
| 30 | Federal Grant Amortization - Renewables | (962,888) | - | (962,888) |
| 31 | Federal Grant Basis Adj. - Renewables | 481,444 | - | 481,444 |
| 32 | State Income Tax | (14,227,423) | (2,401,820) | (16,629,242) |
| 33 | Total Federal Tax Adjustments | (21,443,367) | (18,516,185) | (39,959,552) |

| | A | D | E | F |
|---|---|---|---|---|
| 1 | **Public Service Company of New Mexico** | | | |
| 2 | **Schedule H-9** | | | |
| 3 | **Federal and State Income Taxes** | | | |
| 4 | **Base Period Ending 6/30/2026** | | | |
| 5 | **Test Period Ending 9/30/2028** | | | |
| 6 | **This schedule is sponsored by PNM Witness Morris** | | | |
| 7 | | | | |
| 8 | **Description** | **Adjusted Base Period** | **Adjusted Base to Test Period Variance** | **Test Period** |
| 34 | | | | |
| 35 | Taxable Income | 241,142,756 | 40,708,810 | 281,851,566 |
| 36 | | | | |
| 37 | Federal Tax Rate | 21.00% | | 21.00% |
| 38 | | | | |
| 39 | Federal Income Tax | 50,639,979 | 8,548,850 | 59,188,829 |
| 40 | | | | |
| 41 | Adjustments to Tax: | | | |
| 42 | TRA 1986 Excess Payroll Tax Reversal | (6,146) | - | (6,146) |
| 43 | TRA 1986 Excess ADFIT Reversal - Protected (ARAM) | (44,888) | (1,364) | (46,252) |
| 44 | TCJA 2017 Excess ADFIT Reversal - Protected (ARAM) | (7,849,272) | 198,674 | (7,650,598) |
| 45 | TCJA 2017 Excess ADFIT Reversal - Unprotected | (15,685,191) | 11,763,893 | (3,921,298) |
| 46 | NM 2017 Excess ADSIT Reversal - Unprotected | - | - | - |
| 47 | ITC Amortization - Generation | (169,377) | (13,043,253) | (13,212,630) |
| 48 | ITC Amortization - Renewable | - | - | - |
| 49 | R & D Credit | (1,538,462) | - | (1,538,462) |
| 50 | UTP (FIN 48) - Credits | - | - | - |
| 51 | Total Adjustments to Taxes | (25,293,335) | (1,082,049) | (26,375,385) |
| 52 | | | | |
| 53 | **Net Allowable Federal Income Tax** | **25,346,644** | **7,466,801** | **32,813,444** |

| | A | D | E | F |
|---|---|---|---|---|
| 1 | **Public Service Company of New Mexico** | | | |
| 2 | **Schedule H-9** | | | |
| 3 | **Federal and State Income Taxes** | | | |
| 4 | **Base Period Ending 6/30/2026** | | | |
| 5 | **Test Period Ending 9/30/2028** | | | |
| 6 | **This schedule is sponsored by PNM Witness Morris** | | | |
| 7 | | | | |
| 8 | **Description** | **Adjusted Base Period** | **Adjusted Base to Test Period Variance** | **Test Period** |
| 54 | | | | |
| 55 | State Income Tax | | | |
| 56 | Pre-Tax Income | 262,586,123 | 59,224,995 | 321,811,118 |
| 57 | Permanent and Flow-Through Differences | (7,215,944) | (16,114,365) | (23,330,309) |
| 58 | | | | |
| 59 | State Taxable Income | 255,370,179 | 43,110,630 | 298,480,809 |
| 60 | | | | |
| 61 | Effective State Tax Rate (Rate/(1+Rate)) | 5.57% | | 5.57% |
| 62 | | | | |
| 63 | State Income Tax | 14,227,423 | 2,401,820 | 16,629,242 |
| 64 | | | | |
| 65 | Adjustments to Tax: | | | |
| 66 | New Mexico NOL Valuation Allowance | - | - | - |
| 67 | Amortization of Excess Deferred State Taxes | - | - | - |
| 68 | | | | |
| 69 | **Net Allowable State Income Tax** | **14,227,423** | **2,401,820** | **16,629,242** |

| | A | G | H | I |
|---|---|---|---|---|
| 1 | **Public Service Company of New Mexico** | | | |
| 2 | **Schedule H-9** | | | |
| 3 | **Federal and State Income Taxes** | | | |
| 4 | **Base Period Ending 6/30/2026** | | | |
| 5 | **Test Period Ending 9/30/2028** | | | |
| 6 | **This schedule is sponsored by PNM Witness Morris** | | | |
| 7 | | | | |
| 8 | **Description** | **Variance Percentage** | **Refer to Notes** | **Reference** |
| 9 | | | | |
| 10 | Federal Income Tax | | | |
| 11 | Revenues | | | PNM Exhibit RNG-3 COS Test, Line 725 |
| 12 | | | | |
| 13 | Less Expenses: | | | |
| 14 | Interest Expense | | | PNM Exhibit RNG-3 COS Test, Line 674 |
| 15 | Operating Expenses, Revenue Credits & Revenue Tax | | | PNM Exhibit RNG-3 COS Test, Line 691,716,721 |
| 16 | Total Expenses | | | |
| 17 | | | | |
| 18 | Pre-Tax Income | | | |
| 19 | | | | |
| 20 | Federal Tax Adjustments | | | |
| 21 | | | | |
| 22 | Non-Deductible Meals | 0.00% | | PNM Exhibit RNG-3 COS Test, Line 624 |
| 23 | Non-Deductible Parking | 0.00% | | PNM Exhibit RNG-3 COS Test, Line 625 |
| 24 | PVNGS Gain Amortization | 0.00% | | PNM Exhibit RNG-3 COS Test, Line 626 |
| 25 | AFUDC - Equity | 152.14% | A | PNM Exhibit RNG-3 COS Test, Line 627 |
| 26 | AFUDC - Equity - Renewables | -20.93% | B | PNM Exhibit RNG-3 COS Test, Line 628 |
| 27 | AFUDC - Equity - Grid Mod | 0.00% | | PNM Exhibit RNG-3 COS Test, Line 629 |
| 28 | Depreciation Flow Through | 0.94% | | PNM Exhibit RNG-3 COS Test, Line 630 |
| 29 | Gain or Loss Flow Through | 0.00% | | PNM Exhibit RNG-3 COS Test, Line 631 |
| 30 | Federal Grant Amortization - Renewables | 0.00% | | PNM Exhibit RNG-3 COS Test, Line 632 |
| 31 | Federal Grant Basis Adj. - Renewables | 0.00% | | PNM Exhibit RNG-3 COS Test, Line 633 |
| 32 | State Income Tax | 16.88% | C | PNM Exhibit RNG-3 COS Test, Line 686 |
| 33 | Total Federal Tax Adjustments | | | |

| | A | G | H | I |
|---|---|---|---|---|
| 1 | **Public Service Company of New Mexico** | | | |
| 2 | **Schedule H-9** | | | |
| 3 | **Federal and State Income Taxes** | | | |
| 4 | **Base Period Ending 6/30/2026** | | | |
| 5 | **Test Period Ending 9/30/2028** | | | |
| 6 | **This schedule is sponsored by PNM Witness Morris** | | | |
| 7 | | | | |
| 8 | **Description** | **Variance Percentage** | **Refer to Notes** | **Reference** |
| 34 | | | | |
| 35 | Taxable Income | | | |
| 36 | | | | |
| 37 | Federal Tax Rate | 0.00% | | |
| 38 | | | | |
| 39 | Federal Income Tax | | | PNM Exhibit RNG-3 COS Test, Line 662 |
| 40 | | | | |
| 41 | Adjustments to Tax: | | | |
| 42 | TRA 1986 Excess Payroll Tax Reversal | 0.00% | | PNM Exhibit RNG-3 COS Test, Line 644 |
| 43 | TRA 1986 Excess ADFIT Reversal - Protected (ARAM) | 3.04% | | PNM Exhibit RNG-3 COS Test, Line 645 |
| 44 | TCJA 2017 Excess ADFIT Reversal - Protected (ARAM) | -2.53% | | PNM Exhibit RNG-3 COS Test, Line 645 |
| 45 | TCJA 2017 Excess ADFIT Reversal - Unprotected | -75.00% | D | PNM Exhibit RNG-3 COS Test, Line 645 |
| 46 | NM 2017 Excess ADSIT Reversal - Unprotected | 0.00% | | |
| 47 | ITC Amortization - Generation | 7700.72% | E | PNM Exhibit RNG-3 COS Test, Line 651 |
| 48 | ITC Amortization - Renewable | 0.00% | | PNM Exhibit RNG-3 COS Test, Line 652 |
| 49 | R & D Credit | 0.00% | | PNM Exhibit RNG-3 COS Test, Line 654 |
| 50 | UTP (FIN 48) - Credits | 0.00% | | |
| 51 | Total Adjustments to Taxes | | | |
| 52 | | | | |
| 53 | **Net Allowable Federal Income Tax** | | | PNM Exhibit RNG-3 COS Test, Line 668 |

| | A | G | H | I |
|---|---|---|---|---|
| 1 | **Public Service Company of New Mexico** | | | |
| 2 | **Schedule H-9** | | | |
| 3 | **Federal and State Income Taxes** | | | |
| 4 | **Base Period Ending 6/30/2026** | | | |
| 5 | **Test Period Ending 9/30/2028** | | | |
| 6 | **This schedule is sponsored by PNM Witness Morris** | | | |
| 7 | | | | |
| 8 | **Description** | **Variance Percentage** | **Refer to Notes** | **Reference** |
| 54 | | | | |
| 55 | State Income Tax | | | |
| 56 | Pre-Tax Income | | | |
| 57 | Permanent and Flow-Through Differences | | | See References for Lines 23-32, above |
| 58 | | | | |
| 59 | State Taxable Income | | | |
| 60 | | | | |
| 61 | Effective State Tax Rate (Rate/(1+Rate)) | | | |
| 62 | | | | |
| 63 | State Income Tax | | | PNM Exhibit RNG-3 COS Test, Line 682 |
| 64 | | | | |
| 65 | Adjustments to Tax: | | | |
| 66 | New Mexico NOL Valuation Allowance | 0.00% | | PNM Exhibit RNG-3 COS Test, Line 678 |
| 67 | Amortization of Excess Deferred State Taxes | 0.00% | | PNM Exhibit RNG-3 COS Test, Line 679 |
| 68 | | | | |
| 69 | **Net Allowable State Income Tax** | | | PNM Exhibit RNG-3 COS Test, Line 686 |

| | A |
|---|---|
| 1 | **Public Service Company of New Mexico** |
| 2 | **Schedule H-9** |
| 3 | **Federal and State Income Taxes (Notes)** |
| 4 | **Base Period Ending 6/30/2026** |
| 5 | **Test Period Ending 9/30/2028** |
| 6 | **This schedule is sponsored by PNM Witness Morris** |
| 7 | |
| 8 | Base period data is historical information from the Company's Book Balance Amounts |
| 9 | Note A - Variance due to projection of Test Period AFUDC equity |
| 10 | Note B - Variance due to projection of Test Period AFUDC equity renewables |
| 11 | Note C - Variance due to change in Federal pretax income |
| 12 | Note D - Variance due to accelerated amortization of unprotected TCJA 2017 ADFIT |
| 13 | Note E - Variance due to amortization of higher tax credit amounts |

# PNM Schedule H-10

Reconciliation of net income per books to net income for income tax purposes

| | A | B | C | D | E |
|---|---|---|---|---|---|
| 1 | **Public Service Company of New Mexico** | | | | |
| 2 | **Schedule H-10** | | | | |
| 3 | **Reconciliation of Net Income Per Books to Net Income** | | | | |
| 4 | **for Income Tax Purposes** | | | | |
| 5 | **Base Period Ending 6/30/2026** | | | | |
| 6 | **Test Period Ending 9/30/2028** | | | | |
| 7 | **This schedule is sponsored by PNM Witness Morris** | | | | |
| 8 | | | | | |
| 9 | **Description** | **Unadjusted Base Period** | **Base Period Adjustments** | **Adjusted Base Period** | **Adjusted Base to Test Period Variance** |
| 10 | | | | | |
| 11 | **Net Income** | 241,634,318 | (18,622,261) | 223,012,057 | 49,356,374 |
| 12 | | | | | |
| 13 | **Permanent and Flow-Through Differences:** | | | | |
| 14 | Federal Income Tax | 30,296,865 | (4,950,221) | 25,346,644 | 7,466,801 |
| 15 | Non-Deductible Meals | - | - | - | - |
| 16 | Non-Deductible Parking | 330,465 | - | 330,465 | - |
| 17 | PVNGS Gain Amortization | (39,828) | - | (39,828) | - |
| 18 | AFUDC - Equity | (10,614,782) | - | (10,614,782) | (16,149,751) |
| 19 | AFUDC - Equity - Renewables | (41,892) | - | (41,892) | 8,768 |
| 20 | AFUDC - Equity - Grid Mod | (79,282) | | (79,282) | - |
| 21 | Depreciation Flow Through | 2,819,235 | - | 2,819,235 | 26,618 |
| 22 | Gain or Loss Flow Through | 891,582 | - | 891,582 | 0 |
| 23 | Federal Grant Amortization - Renewables | (962,888) | - | (962,888) | - |
| 24 | Federal Grant Basis Adj. - Renewables | 481,444 | - | 481,444 | - |
| 25 | **Total Permanent and Flow-Through Differences** | **23,080,921** | **(4,950,221)** | **18,130,699** | **(8,647,564)** |
| 26 | | | | | |
| 27 | **Taxable Income for Ratemaking Purposes** | **264,715,239** | **(23,572,482)** | **241,142,756** | **40,708,810** |
| 28 | | | | | |
| 29 | **Temporary Differences:** | | | | |
| 30 | Pension - Non-Qualified | (444,899) | - | (444,899) | 444,899 |
| 31 | Pension - Qualified | 64,405,281 | - | 64,405,281 | (64,405,281) |
| 32 | Other Post Employment Benefits | (4,677,094) | - | (4,677,094) | 4,677,094 |
| 33 | Loss on Reacquired Debt | 391,099 | - | 391,099 | - |
| 34 | Other - PVNGS Licensing | (53,136) | - | (53,136) | - |
| 35 | Coal Mine Decommissioning | - | - | - | - |
| 36 | Prepaid Expenses | 7,704,820 | - | 7,704,820 | - |
| 37 | PVNGS Dry Casks | 1,810,719 | - | 1,810,719 | - |

| | A | B | C | D | E |
|---|---|---|---|---|---|
| 1 | **Public Service Company of New Mexico** | | | | |
| 2 | **Schedule H-10** | | | | |
| 3 | **Reconciliation of Net Income Per Books to Net Income** | | | | |
| 4 | **for Income Tax Purposes** | | | | |
| 5 | **Base Period Ending 6/30/2026** | | | | |
| 6 | **Test Period Ending 9/30/2028** | | | | |
| 7 | **This schedule is sponsored by PNM Witness Morris** | | | | |
| 8 | | | | | |
| 9 | **Description** | **Unadjusted Base Period** | **Base Period Adjustments** | **Adjusted Base Period** | **Adjusted Base to Test Period Variance** |
| 38 | Rate Case Expenses | 1,917,376 | - | 1,917,376 | - |
| 39 | Section 263A Deduction | (55,230,830) | - | (55,230,830) | (19,372,341) |
| 40 | AFUDC Debt | (13,774,475) | - | (13,774,475) | (3,956,739) |
| 41 | PVNGS Construction Credits | - | - | - | - |
| 42 | Liberalized Depreciation - Nuclear Fuel | 5,778,891 | - | 5,778,891 | (1,872,759) |
| 43 | Liberalized Depreciation | (1,665,005) | - | (1,665,005) | - |
| 44 | Gain or Loss on Asset Retirements | - | - | - | - |
| 45 | Asset Retirement Obligations | 8,300,390 | - | 8,300,390 | 1,145,518 |
| 46 | Plant Repairs Deduction | (199,839,118) | - | (199,839,118) | 31,169,779 |
| 47 | Section 174 Deduction | 6,913,059 | - | 6,913,059 | 4,116,502 |
| 48 | Tax Capitalized Interest | 20,097,368 | - | 20,097,368 | 1,571,384 |
| 49 | COVID-19 Costs | 1,673,810 | - | 1,673,810 | - |
| 50 | EIM Costs | 3,758,140 | - | 3,758,140 | - |
| 51 | SJGS Decommissioning | - | - | - | - |
| 52 | Solar Direct Costs | - | - | - | - |
| 53 | Transportation Electrification | - | - | - | - |
| 54 | WCC Transaction Costs | - | - | - | - |
| 55 | Energy Efficiency | (2,686,440) | - | (2,686,440) | - |
| 56 | Injuries and Damages | 848,026 | - | 848,026 | - |
| 57 | PVNGS Decommissioning | 110,633 | - | 110,633 | - |
| 58 | PVNGS Decommissioning Unit 1 | 4,036,072 | - | 4,036,072 | - |
| 59 | PVNGS Decommissioning Unit2 | 314,932 | - | 314,932 | - |
| 60 | Other Deferred Credits | (267,680) | - | (267,680) | - |
| 61 | Other Liabilities | 130,146 | - | 130,146 | - |
| 62 | Capitalized Interest - Book | (1,118,231) | - | (1,118,231) | (133,373) |
| 63 | CIAC | 26,427,575 | - | 26,427,575 | 3,991,008 |
| 64 | IRP 2026 | (179,069) | - | (179,069) | - |
| 65 | COVID Bad Debt 2024 | (593,155) | - | (593,155) | - |

| | A | B | C | D | E |
|---|---|---|---|---|---|
| 1 | **Public Service Company of New Mexico** | | | | |
| 2 | **Schedule H-10** | | | | |
| 3 | **Reconciliation of Net Income Per Books to Net Income** | | | | |
| 4 | **for Income Tax Purposes** | | | | |
| 5 | **Base Period Ending 6/30/2026** | | | | |
| 6 | **Test Period Ending 9/30/2028** | | | | |
| 7 | **This schedule is sponsored by PNM Witness Morris** | | | | |
| 8 | | | | | |
| 9 | **Description** | **Unadjusted Base Period** | **Base Period Adjustments** | **Adjusted Base Period** | **Adjusted Base to Test Period Variance** |
| 66 | Community Solar | (2,024,408) | - | (2,024,408) | - |
| 67 | Rate Case Expenses 2024 | 966,274 | - | 966,274 | - |
| 68 | Rate Case Expenses 2025 | (1,613,879) | - | (1,613,879) | - |
| 69 | EDAM | (747,771) | - | (747,771) | - |
| 70 | FPPCAC | - | - | - | - |
| 71 | Grid Modernization 2025 | - | - | - | - |
| 72 | Grid Modernization 2026 | - | - | - | - |
| 73 | PVNGS Lease Costs | (13,051,702) | - | (13,051,702) | - |
| 74 | Rate Rider 12 UG | 2,159,118 | - | 2,159,118 | - |
| 75 | TOD Program | (1,983,894) | - | (1,983,894) | - |
| 76 | Renewable Energy | (310,614) | - | (310,614) | - |
| 77 | Renewable Rider | (7,705,125) | - | (7,705,125) | - |
| 78 | SJ Energy Transition Property (SPE) | 7,144,256 | - | 7,144,256 | - |
| 79 | SJGS External Legal Fees | 19,793 | - | 19,793 | - |
| 80 | SJGS ETA Decom | (1,687,556) | - | (1,687,556) | - |
| 81 | SJGS Final ETA Mine Reclamation | (1,630,148) | - | (1,630,148) | - |
| 82 | SJGS Obsolete Inventory | 251,786 | - | 251,786 | - |
| 83 | SJGS Replacement Resources | 332,742 | - | 332,742 | - |
| 84 | SJGS Stranded Costs | 6,276,936 | - | 6,276,936 | - |
| 85 | SJGS Undepreciated Investment | - | - | - | - |
| 86 | SJGS Underground Coal Mine | - | - | - | - |
| 87 | Energy Storage Agreement | 7,415,798 | - | 7,415,798 | - |
| 88 | Energy Transition Charges | - | - | - | - |
| 89 | SJGS Retirement Rate Credits | 14,474 | - | 14,474 | - |
| 90 | Gain/Loss on Asset Disposition | (45,304,806) | - | (45,304,806) | 20,258,663 |
| 91 | Demolition Costs | 285,804 | - | 285,804 | (285,804) |
| 92 | PCB Refinancing Hedge | 844,446 | - | 844,446 | - |
| 93 | Deductible State Income Tax Expense | - | - | - | - |

| | A | B | C | D | E |
|---|---|---|---|---|---|
| 1 | **Public Service Company of New Mexico** | | | | |
| 2 | **Schedule H-10** | | | | |
| 3 | **Reconciliation of Net Income Per Books to Net Income** | | | | |
| 4 | **for Income Tax Purposes** | | | | |
| 5 | **Base Period Ending 6/30/2026** | | | | |
| 6 | **Test Period Ending 9/30/2028** | | | | |
| 7 | **This schedule is sponsored by PNM Witness Morris** | | | | |
| 8 | | | | | |
| 9 | **Description** | **Unadjusted Base Period** | **Base Period Adjustments** | **Adjusted Base Period** | **Adjusted Base to Test Period Variance** |
| 94 | Net Operating Loss Carryforward | - | 24,963,259 | (79,110,907) | 79,110,907 |
| 95 | Book State Income Tax Expense | 15,618,199 | (1,390,776) | 14,227,423 | 2,401,820 |
| 96 | | | | | |
| 97 | | | | | |
| 98 | Total Temporary Differences | (160,641,073) | 23,572,482 | (241,142,756) | 58,861,276 |
| 99 | | | | | |
| 100 | Taxable Income Reportable on Tax Return | 104,074,166 | - | - | 99,570,086 |

| | A | F | G | H |
|---|---|---|---|---|
| 1 | **Public Service Company of New Mexico** | | | |
| 2 | **Schedule H-10** | | | |
| 3 | **Reconciliation of Net Income Per Books to Net Income** | | | |
| 4 | **for Income Tax Purposes** | | | |
| 5 | **Base Period Ending 6/30/2026** | | | |
| 6 | **Test Period Ending 9/30/2028** | | | |
| 7 | **This schedule is sponsored by PNM Witness Morris** | | | |
| 8 | | | | |
| 9 | **Description** | **Test Period** | **Variance Percentage** | **Reference** |
| 10 | | | | |
| 11 | **Net Income** | 272,368,431 | | |
| 12 | | | | |
| 13 | **Permanent and Flow-Through Differences:** | | | |
| 14 | Federal Income Tax | 32,813,444 | 29.46% | PNM Exhibit RNG-3 COS Test, Line 694 |
| 15 | Non-Deductible Meals | - | 0.00% | PNM Exhibit RNG-3 COS Test, Line 624 |
| 16 | Non-Deductible Parking | 330,465 | 0.00% | PNM Exhibit RNG-3 COS Test, Line 625 |
| 17 | PVNGS Gain Amortization | (39,828) | 0.00% | PNM Exhibit RNG-3 COS Test, Line 626 |
| 18 | AFUDC - Equity | (26,764,533) | 152.14% | PNM Exhibit RNG-3 COS Test, Line 627 |
| 19 | AFUDC - Equity - Renewables | (33,124) | -20.93% | PNM Exhibit RNG-3 COS Test, Line 628 |
| 20 | AFUDC - Equity - Grid Mod | (79,282) | 0.00% | PNM Exhibit RNG-3 COS Test, Line 629 |
| 21 | Depreciation Flow Through | 2,845,854 | 0.94% | PNM Exhibit RNG-3 COS Test, Line 630 |
| 22 | Gain or Loss Flow Through | 891,582 | 0.00% | PNM Exhibit RNG-3 COS Test, Line 631 |
| 23 | Federal Grant Amortization - Renewables | (962,888) | 0.00% | PNM Exhibit RNG-3 COS Test, Line 632 |
| 24 | Federal Grant Basis Adj. - Renewables | 481,444 | 0.00% | PNM Exhibit RNG-3 COS Test, Line 633 |
| 25 | **Total Permanent and Flow-Through Differences** | **9,483,135** | | |
| 26 | | | | |
| 27 | **Taxable Income for Ratemaking Purposes** | **281,851,566** | | |
| 28 | | | | |
| 29 | **Temporary Differences:** | | | |
| 30 | Pension - Non-Qualified | - | | |
| 31 | Pension - Qualified | - | | |
| 32 | Other Post Employment Benefits | - | | |
| 33 | Loss on Reacquired Debt | 391,099 | | |
| 34 | Other - PVNGS Licensing | (53,136) | | |
| 35 | Coal Mine Decommissioning | - | | |
| 36 | Prepaid Expenses | 7,704,820 | | |
| 37 | PVNGS Dry Casks | 1,810,719 | | |

| | A | F | G | H |
|---|---|---|---|---|
| 1 | **Public Service Company of New Mexico** | | | |
| 2 | **Schedule H-10** | | | |
| 3 | **Reconciliation of Net Income Per Books to Net Income** | | | |
| 4 | **for Income Tax Purposes** | | | |
| 5 | **Base Period Ending 6/30/2026** | | | |
| 6 | **Test Period Ending 9/30/2028** | | | |
| 7 | **This schedule is sponsored by PNM Witness Morris** | | | |
| 8 | | | | |
| 9 | **Description** | **Test Period** | **Variance Percentage** | **Reference** |
| 38 | Rate Case Expenses | 1,917,376 | | |
| 39 | Section 263A Deduction | (74,603,171) | | |
| 40 | AFUDC Debt | (17,731,214) | | |
| 41 | PVNGS Construction Credits | - | | |
| 42 | Liberalized Depreciation - Nuclear Fuel | 3,906,131 | | |
| 43 | Liberalized Depreciation | (1,665,005) | | |
| 44 | Gain or Loss on Asset Retirements | - | | |
| 45 | Asset Retirement Obligations | 9,445,907 | | |
| 46 | Plant Repairs Deduction | (168,669,338) | | |
| 47 | Section 174 Deduction | 11,029,562 | | |
| 48 | Tax Capitalized Interest | 21,668,752 | | |
| 49 | COVID-19 Costs | 1,673,810 | | |
| 50 | EIM Costs | 3,758,140 | | |
| 51 | SJGS Decommissioning | - | | |
| 52 | Solar Direct Costs | - | | |
| 53 | Transportation Electrification | - | | |
| 54 | WCC Transaction Costs | - | | |
| 55 | Energy Efficiency | (2,686,440) | | |
| 56 | Injuries and Damages | 848,026 | | |
| 57 | PVNGS Decommissioning | 110,633 | | |
| 58 | PVNGS Decommissioning Unit 1 | 4,036,072 | | |
| 59 | PVNGS Decommissioning Unit2 | 314,932 | | |
| 60 | Other Deferred Credits | (267,680) | | |
| 61 | Other Liabilities | 130,146 | | |
| 62 | Capitalized Interest - Book | (1,251,604) | | |
| 63 | CIAC | 30,418,583 | | |
| 64 | IRP 2026 | (179,069) | | |
| 65 | COVID Bad Debt 2024 | (593,155) | | |

| | A | F | G | H |
|---|---|---|---|---|
| 1 | **Public Service Company of New Mexico** | | | |
| 2 | **Schedule H-10** | | | |
| 3 | **Reconciliation of Net Income Per Books to Net Income** | | | |
| 4 | **for Income Tax Purposes** | | | |
| 5 | **Base Period Ending 6/30/2026** | | | |
| 6 | **Test Period Ending 9/30/2028** | | | |
| 7 | **This schedule is sponsored by PNM Witness Morris** | | | |
| 8 | | | | |
| 9 | **Description** | **Test Period** | **Variance Percentage** | **Reference** |
| 66 | Community Solar | (2,024,408) | | |
| 67 | Rate Case Expenses 2024 | 966,274 | | |
| 68 | Rate Case Expenses 2025 | (1,613,879) | | |
| 69 | EDAM | (747,771) | | |
| 70 | FPPCAC | - | | |
| 71 | Grid Modernization 2025 | - | | |
| 72 | Grid Modernization 2026 | - | | |
| 73 | PVNGS Lease Costs | (13,051,702) | | |
| 74 | Rate Rider 12 UG | 2,159,118 | | |
| 75 | TOD Program | (1,983,894) | | |
| 76 | Renewable Energy | (310,614) | | |
| 77 | Renewable Rider | (7,705,125) | | |
| 78 | SJ Energy Transition Property (SPE) | 7,144,256 | | |
| 79 | SJGS External Legal Fees | 19,793 | | |
| 80 | SJGS ETA Decom | (1,687,556) | | |
| 81 | SJGS Final ETA Mine Reclamation | (1,630,148) | | |
| 82 | SJGS Obsolete Inventory | 251,786 | | |
| 83 | SJGS Replacement Resources | 332,742 | | |
| 84 | SJGS Stranded Costs | 6,276,936 | | |
| 85 | SJGS Undepreciated Investment | - | | |
| 86 | SJGS Underground Coal Mine | - | | |
| 87 | Energy Storage Agreement | 7,415,798 | | |
| 88 | Energy Transition Charges | - | | |
| 89 | SJGS Retirement Rate Credits | 14,474 | | |
| 90 | Gain/Loss on Asset Disposition | (25,046,143) | | |
| 91 | Demolition Costs | - | | |
| 92 | PCB Refinancing Hedge | 844,446 | | |
| 93 | Deductible State Income Tax Expense | - | | |

| | A | F | G | H |
|---|---|---|---|---|
| 1 | **Public Service Company of New Mexico** | | | |
| 2 | **Schedule H-10** | | | |
| 3 | **Reconciliation of Net Income Per Books to Net Income** | | | |
| 4 | **for Income Tax Purposes** | | | |
| 5 | **Base Period Ending 6/30/2026** | | | |
| 6 | **Test Period Ending 9/30/2028** | | | |
| 7 | **This schedule is sponsored by PNM Witness Morris** | | | |
| 8 | | | | |
| 9 | **Description** | **Test Period** | **Variance Percentage** | **Reference** |
| 94 | Net Operating Loss Carryforward | - | | |
| 95 | Book State Income Tax Expense | 16,629,242 | | |
| 96 | | - | | |
| 97 | | | | |
| 98 | Total Temporary Differences | (182,281,480) | | |
| 99 | | | | |
| 100 | Taxable Income Reportable on Tax Return | 99,570,086 | | |

| | A |
|---|---|
| 1 | **Public Service Company of New Mexico** |
| 2 | **Schedule H-10** |
| 3 | **Reconciliation of Net Income Per Books to Net Income for Income Tax Purposes (Notes)** |
| 4 | **Base Period Ending 6/30/2026** |
| 5 | **Test Period Ending 9/30/2028** |
| 6 | **This schedule is sponsored by PNM Witness Morris** |
| 7 | |
| 8 | Base period data is historical information from the Company's Book Balance Amounts. |
| 9 | See Schedule H-9 for Variance Explanations. |
| 10 | Temporary Book/Tax Differences are informational only and do not affect total income tax expense. |
| 11 | Provides data to PNM Exhibit RNG-3 COS Base Adj, COS Test |

# PNM Schedule H-11

Income tax effect as result of applicant joining in a consolidated federal income tax return

| | A |
|---|---|
| 1 | **Public Service Company of New Mexico** |
| 2 | **Schedule H-11** |
| 3 | **Income Tax Effect as a Result of Applicant Joining in a Consolidated Federal Income Tax Return** |
| 4 | **Base Period Ending 6/30/2026** |
| 5 | **Test Period Ending 9/30/2028** |
| 6 | **This schedule is sponsored by PNM Witness Morris** |
| 7 | |
| 8 | Please refer to the direct testimony of PNM Witness Morris |

# PNM Schedule H-12

Accumulated tax deferrals

| | A | B | C |
|---|---|---|---|
| 1 | **Public Service Company of New Mexico** | | |
| 2 | **Schedule H-12** | | |
| 3 | **Accumulated Tax Deferrals** | | |
| 4 | **Base Period Ending 6/30/2026** | | |
| 5 | **Test Period Ending 9/30/2028** | | |
| 6 | **This schedule is sponsored by PNM Witness Morris** | | |
| 7 | | | |
| 8 | | | |
| 9 | | **30-Jun-25** | |
| 10 | | **Balance** | **Debits** |
| 11 | **Accumulated Deferred Income Taxes** | | |
| 12 | Federal Tax Credit Carryforward | 20,385,086 | 97,161 |
| 13 | Federal Tax Credit Carryforward - Renewables | 69,083,272 | - |
| 14 | Net Operating Loss (NOL) | 29,657,601 | 950,741 |
| 15 | Incentive Pay Plans | 3,715,566 | - |
| 16 | Regulatory Assets - Coal Mine Decommissioning | - | - |
| 17 | Regulatory Liabilities - Renewable Rider | 1,601,282 | 298,045 |
| 18 | Income Tax Regulatory Liability | 58,627,826 | 1,846,917 |
| 19 | Income Tax Regulatory Asset | (65,756,446) | 44,827 |
| 20 | Investment Tax Credit 2024 | 7,393,757 | - |
| 21 | Investment Tax Credit - Sandia | - | - |
| 22 | Investment Tax Credit - Sunbelt | - | - |
| 23 | Investment Tax Credit - Distribution Battery Phase 2 | - | - |
| 24 | Lease Liability | 71,582,279 | - |
| 25 | Deferred Credits - Coal Mine Decommissioning | 21,272,510 | 15,029 |
| 26 | Regulatory Assets - ETA Carrying Charges | - | - |
| 27 | Regulatory Assets - ETA Job Training & Severance | - | - |
| 28 | Regulatory Assets - ETA Payments to State Agencies | - | - |
| 29 | Regulatory Assets - ETA SJGS Plant Decommissioning | - | - |
| 30 | Regulatory Assets - ETA SJGS upfront Financing Cost | - | - |
| 31 | Regulatory Assets - ETA Westmoreland Coal Mine Sev | - | - |
| 32 | Deferred Credits - Joint Use | 8,299 | - |
| 33 | Deferred Credits - Pathnet | 1,431,706 | - |
| 34 | Deferred Credits - PVNGS Dry Casks | 3,698,871 | 57,444 |
| 35 | Other Deferred Credits | 2,772,071 | 51,210 |
| 36 | Other Liabilities - ETA Job Training and Severance | 18,584 | - |
| 37 | Other Liabilities - Navajo Workforce Training | 25,400 | - |
| 38 | Other Liabilities | 1,517,763 | 32,702 |
| 39 | Blackstone Transaction Costs | 16 | 132,677 |
| 40 | Injury and Damages | 914,143 | 33,774 |
| 41 | Plant - AFUDC | (32,081,857) | 119,485 |
| 42 | Plant - Capitalized Interest | 11,405,613 | 264,800 |
| 43 | Decommissioning and Reclamation Trusts | (92,343,246) | 62,724 |
| 44 | ASC 740-10 (FIN 48) Reclassifications | 63,805 | - |
| 45 | Estimated Tax Rate Adjustment | (8,219,899) | 9,648,602 |
| 46 | PVNGS Licensing | 30,368 | - |
| 47 | Plant - 263A Adjustment | (59,213,228) | 67,295 |
| 48 | Deferred State Taxes | 3,946,510 | - |
| 49 | Plant - CIAC | 20,008,613 | 450,221 |
| 50 | Plant - Depreciation Nuclear Fuel | 7,314,454 | 438,743 |
| 51 | Plant - Removal Cost | (6,554,623) | 120,744 |
| 52 | Plant - Repairs | (93,776,371) | 45,137 |
| 53 | Plant - Section 174 Deduction | 5,536,775 | 281,457 |
| 54 | Plant - Asset Retirement Obligation | 91,486,675 | 18,325 |

| | A | B | C |
|---|---|---|---|
| 1 | **Public Service Company of New Mexico** | | |
| 2 | **Schedule H-12** | | |
| 3 | **Accumulated Tax Deferrals** | | |
| 4 | **Base Period Ending 6/30/2026** | | |
| 5 | **Test Period Ending 9/30/2028** | | |
| 6 | **This schedule is sponsored by PNM Witness Morris** | | |
| 7 | | | |
| 8 | | | |
| 9 | | **30-Jun-25** | |
| 10 | | **Balance** | **Debits** |
| 55 | Plant - Pollution Control Property | (2,154,701) | - |
| 56 | Plant - Liberalized Depreciation: Production | (121,172,671) | 1,703,412 |
| 57 | Plant - Liberalized Depreciation: Transmission | (153,625,984) | 467,840 |
| 58 | Plant - Liberalized Depreciation: Distribution | (141,060,141) | - |
| 59 | Plant - Liberalized Depreciation: General and Intangible | (10,690,094) | 81,130 |
| 60 | Plant - Liberalized Depreciation: Grid Mod | (1,857,935) | - |
| 61 | Plant - Liberalized Depreciation: Renewables | (48,257,380) | - |
| 62 | Plant - Four Corners Imprudence | - | - |
| 63 | Regulatory Assets - SJGS Stranded Costs Units 2&3 | (20,062,387) | 138,982 |
| 64 | Pension | (62,415,849) | 29,784 |
| 65 | Retiree Medical | (9,574,951) | 3,171 |
| 66 | Lease Asset | (72,386,872) | - |
| 67 | Loss on Reacquired Debt | (1,091,349) | 8,660 |
| 68 | Other Comprehensive Income (OCI) | 25,843,094 | - |
| 69 | Deferred Credits - SO2 Allowance | - | - |
| 70 | Deferred Debits - Rate Case Expense | (580,164) | - |
| 71 | Deferred Debits - Decoupling | - | - |
| 72 | Deferred Debits - Grid Modernization | (519,105) | 4,320 |
| 73 | Deferred Debits - RR Underground Rider | - | - |
| 74 | Energy Storage Agreement | - | - |
| 75 | Energy Transition Charges | 1,203,752 | 3,309 |
| 76 | Prepaid Expenses | (1,005,533) | 540,396 |
| 77 | Regulatory Assets - 2024 COVID Bad Debt | - | - |
| 78 | Regulatory Assets - COVID-19 Costs | (669,202) | 531,479 |
| 79 | Regulatory Assets - Community Solar | (388,556) | 1,786 |
| 80 | Regulatory assets - FAC | (5,571,874) | 49,489 |
| 81 | Regulatory Assets - EDAM Costs | - | - |
| 82 | Regulatory Assets - EIM Costs | (3,380,800) | 83,212 |
| 83 | Regulatory Assets - Energy Efficiency | 15,856 | 99,029 |
| 84 | Regulatory Assets - ETA | - | - |
| 85 | Regulatory Assets - FERC 893 Cyber | - | - |
| 86 | Regulatory Assets - IRP | - | - |
| 87 | Regulatory Assets - Sky Blue Under Recovery | - | - |
| 88 | Regulatory Assets - Renewable Energy | (93,106) | 6,559 |
| 89 | Regulatory Assets - Renewable Energy Credits | - | - |
| 90 | Regulatory Assets - SJGS External Legal Fees | (118,358) | 438 |
| 91 | Regulatory Assets - SJGS Final ETA Depcom | (237,965) | 729 |
| 92 | Regulatory Assets - SJGS Final ETA Mine Rec | (6,384,598) | 1,466 |
| 93 | Regulatory Assets - SJGS Replacement Resources | (1,989,679) | 7,367 |
| 94 | Regulatory Assets - SJGS Undepreciated Investment | - | - |
| 95 | Regulatory Assets - SJGS Underground Coal Mine | - | - |
| 96 | Regulatory Assets - Solar Direct Regulatory Assets | 22,426 | 1,471 |
| 97 | Regulatory Assets - TOD Rate Pilot Program | (280,892) | - |
| 98 | Regulatory Assets - Transportation Electrification | (1,623,679) | 10,232 |

| | A | B | C |
|---|---|---|---|
| 1 | **Public Service Company of New Mexico** | | |
| 2 | **Schedule H-12** | | |
| 3 | **Accumulated Tax Deferrals** | | |
| 4 | **Base Period Ending 6/30/2026** | | |
| 5 | **Test Period Ending 9/30/2028** | | |
| 6 | **This schedule is sponsored by PNM Witness Morris** | | |
| 7 | | | |
| 8 | | | |
| 9 | | **30-Jun-25** | |
| 10 | | **Balance** | **Debits** |
| 99 | Regulatory Assets - WCC Transaction Costs | - | - |
| 100 | Regulatory Liabilities - Energy Efficiency | 919,303 | 16,587 |
| 101 | Regulatory Liabilities - FAC | - | - |
| 102 | Regulatory Assets - PCB Refinancing Hedge | (1,928,498) | 18,697 |
| 103 | Prepaid Expenses: Production | (646,004) | 76,543 |
| 104 | Prepaid Expenses: Transmission | (3,741,907) | 297,676 |
| 105 | Prepaid Expenses: Transmission (incremental FERC Rates) | - | - |
| 106 | Prepaid Expenses: Distribution | (187,432) | 12,029 |
| 107 | Prepaid Expenses: Renewables | - | - |
| 108 | Regulatory Assets - 2024 Rate Change | (869,254) | 21,395 |
| 109 | Regulatory Assets - 2025 Rate Change | - | 23,204 |
| 110 | Regulatory Assets - SJGS Obsolete Inventory | (1,505,591) | 5,575 |
| 111 | Regulatory Liabilities - Earnings Test | - | - |
| 112 | Regulatory Assets - PVNGS Lease costs | - | - |
| 113 | Regulatory Assets - PVNGS Undepreciated Investment | (20,524,263) | 96,493 |
| 114 | Regulatory Assets - ETC Over/Under SPE | - | - |
| 115 | Regulatory Assets - PVNGS Replacement Resources | (488,126) | 2,295 |
| 116 | Regulatory Assets - Rate Rider 12 UG Rate | (671,345) | 47,547 |
| 117 | Regulatory Assets - Renewable Rider Curr Reg | - | - |
| 118 | Regulatory Assets - SJ Energy Transition Property (SPE) | (84,495,472) | 152,670 |
| 119 | Regulatory Liabilities - Curr Reg Liab-UG Rate Rider 12 | - | - |
| 120 | Regulatory Liabilities - ITC Sandia | - | |
| 121 | Regulatory Liabilities - ITC Sunbelt | - | |
| 122 | Regulatory Liabilities - ITC - Distribution Battery Phase 2 | - | |
| 123 | Regulatory Liabilities - Energy Transition Cost True Up | 308,669 | 7 |
| 124 | Regulatory Liabilities - SJGS Retirements Rate Credit | 20,129 | 175 |
| 125 | Regulatory Liabilities - PVNGS Lease Costs | 3,310,100 | 20,144 |
| 126 | Deferred Debits - WS-Transmission Revenue | (8,132,577) | - |
| 127 | Customer Advance | - | - |
| 128 | Deferred Credits - ETA | - | - |
| 129 | Other Liabilities - ETA Coal Mine Severance | - | - |
| 130 | Other Liabilities - ETA State Agency Payments | - | - |
| 131 | SJGS County Ordinance Decommission | - | - |
| 132 | | | |
| 133 | **Total Accumulated Deferred Income Taxes** | (683,187,789) | 19,643,359 |
| 134 | | | |
| 135 | General Ledger ADIT Balance | (683,187,789) | |
| 136 | | | |
| 137 | Difference (Rounding) | 0 | |

| | A | D | E |
|---|---|---|---|
| 1 | **Public Service Company of New Mexico** | | |
| 2 | **Schedule H-12** | | |
| 3 | **Accumulated Tax Deferrals** | | |
| 4 | **Base Period Ending 6/30/2026** | | |
| 5 | **Test Period Ending 9/30/2028** | | |
| 6 | **This schedule is sponsored by PNM Witness Morris** | | |
| 7 | | | |
| 8 | | | |
| 9 | | | **31-Jul-25** |
| 10 | | **Credits** | **Balance** |
| 11 | **Accumulated Deferred Income Taxes** | | |
| 12 | Federal Tax Credit Carryforward | - | 20,482,247 |
| 13 | Federal Tax Credit Carryforward - Renewables | - | 69,083,272 |
| 14 | Net Operating Loss (NOL) | (7,124,721) | 23,483,621 |
| 15 | Incentive Pay Plans | - | 3,715,566 |
| 16 | Regulatory Assets - Coal Mine Decommissioning | - | - |
| 17 | Regulatory Liabilities - Renewable Rider | (17,178) | 1,882,149 |
| 18 | Income Tax Regulatory Liability | (2,297,718) | 58,177,025 |
| 19 | Income Tax Regulatory Asset | (1,973) | (65,713,593) |
| 20 | Investment Tax Credit 2024 | - | 7,393,757 |
| 21 | Investment Tax Credit - Sandia | - | - |
| 22 | Investment Tax Credit - Sunbelt | - | - |
| 23 | Investment Tax Credit - Distribution Battery Phase 2 | - | - |
| 24 | Lease Liability | - | 71,582,279 |
| 25 | Deferred Credits - Coal Mine Decommissioning | (341,385) | 20,946,154 |
| 26 | Regulatory Assets - ETA Carrying Charges | - | - |
| 27 | Regulatory Assets - ETA Job Training & Severance | - | - |
| 28 | Regulatory Assets - ETA Payments to State Agencies | - | - |
| 29 | Regulatory Assets - ETA SJGS Plant Decommissioning | - | - |
| 30 | Regulatory Assets - ETA SJGS upfront Financing Cost | - | - |
| 31 | Regulatory Assets - ETA Westmoreland Coal Mine Sev | - | - |
| 32 | Deferred Credits - Joint Use | - | 8,299 |
| 33 | Deferred Credits - Pathnet | - | 1,431,706 |
| 34 | Deferred Credits - PVNGS Dry Casks | (2,529) | 3,753,786 |
| 35 | Other Deferred Credits | (3,017) | 2,820,264 |
| 36 | Other Liabilities - ETA Job Training and Severance | - | 18,584 |
| 37 | Other Liabilities - Navajo Workforce Training | - | 25,400 |
| 38 | Other Liabilities | (11,034) | 1,539,432 |
| 39 | Blackstone Transaction Costs | (5,841) | 126,852 |
| 40 | Injury and Damages | (8,098) | 939,819 |
| 41 | Plant - AFUDC | (386,313) | (32,348,685) |
| 42 | Plant - Capitalized Interest | (20,630) | 11,649,783 |
| 43 | Decommissioning and Reclamation Trusts | (1,052,077) | (93,332,600) |
| 44 | ASC 740-10 (FIN 48) Reclassifications | - | 63,805 |
| 45 | Estimated Tax Rate Adjustment | (4,953,813) | (3,525,110) |
| 46 | PVNGS Licensing | - | 30,368 |
| 47 | Plant - 263A Adjustment | (1,528,611) | (60,674,545) |
| 48 | Deferred State Taxes | - | 3,946,510 |
| 49 | Plant - CIAC | (19,820) | 20,439,014 |
| 50 | Plant - Depreciation Nuclear Fuel | (477,563) | 7,275,634 |
| 51 | Plant - Removal Cost | (5,316) | (6,439,195) |
| 52 | Plant - Repairs | (1,025,308) | (94,756,541) |
| 53 | Plant - Section 174 Deduction | (12,391) | 5,805,841 |
| 54 | Plant - Asset Retirement Obligation | (53,241) | 91,451,759 |

| | A | D | E |
|---|---|---|---|
| 1 | **Public Service Company of New Mexico** | | |
| 2 | **Schedule H-12** | | |
| 3 | **Accumulated Tax Deferrals** | | |
| 4 | **Base Period Ending 6/30/2026** | | |
| 5 | **Test Period Ending 9/30/2028** | | |
| 6 | **This schedule is sponsored by PNM Witness Morris** | | |
| 7 | | | |
| 8 | | | |
| 9 | | | **31-Jul-25** |
| 10 | | **Credits** | **Balance** |
| 55 | Plant - Pollution Control Property | - | (2,154,701) |
| 56 | Plant - Liberalized Depreciation: Production | (1,974,599) | (121,443,857) |
| 57 | Plant - Liberalized Depreciation: Transmission | - | (153,158,144) |
| 58 | Plant - Liberalized Depreciation: Distribution | (1,261,717) | (142,321,858) |
| 59 | Plant - Liberalized Depreciation: General and Intangible | - | (10,608,964) |
| 60 | Plant - Liberalized Depreciation: Grid Mod | (16,618) | (1,874,553) |
| 61 | Plant - Liberalized Depreciation: Renewables | (103,069) | (48,360,448) |
| 62 | Plant - Four Corners Imprudence | - | - |
| 63 | Regulatory Assets - SJGS Stranded Costs Units 2&3 | (6,118) | (19,929,523) |
| 64 | Pension | (10,967) | (62,397,031) |
| 65 | Retiree Medical | (72,031) | (9,643,811) |
| 66 | Lease Asset | - | (72,386,872) |
| 67 | Loss on Reacquired Debt | (381) | (1,083,071) |
| 68 | Other Comprehensive Income (OCI) | (116,300) | 25,726,794 |
| 69 | Deferred Credits - SO2 Allowance | - | - |
| 70 | Deferred Debits - Rate Case Expense | - | (580,164) |
| 71 | Deferred Debits - Decoupling | - | - |
| 72 | Deferred Debits - Grid Modernization | (98,120) | (612,905) |
| 73 | Deferred Debits - RR Underground Rider | - | - |
| 74 | Energy Storage Agreement | - | - |
| 75 | Energy Transition Charges | (75,172) | 1,131,889 |
| 76 | Prepaid Expenses | (410,038) | (875,176) |
| 77 | Regulatory Assets - 2024 COVID Bad Debt | - | - |
| 78 | Regulatory Assets - COVID-19 Costs | (522,330) | (660,052) |
| 79 | Regulatory Assets - Community Solar | (40,563) | (427,333) |
| 80 | Regulatory assets - FAC | (1,124,151) | (6,646,536) |
| 81 | Regulatory Assets - EDAM Costs | - | - |
| 82 | Regulatory Assets - EIM Costs | (3,663) | (3,301,252) |
| 83 | Regulatory Assets - Energy Efficiency | (260,063) | (145,177) |
| 84 | Regulatory Assets - ETA | - | - |
| 85 | Regulatory Assets - FERC 893 Cyber | - | - |
| 86 | Regulatory Assets - IRP | - | - |
| 87 | Regulatory Assets - Sky Blue Under Recovery | - | - |
| 88 | Regulatory Assets - Renewable Energy | (289) | (86,836) |
| 89 | Regulatory Assets - Renewable Energy Credits | - | - |
| 90 | Regulatory Assets - SJGS External Legal Fees | (19) | (117,939) |
| 91 | Regulatory Assets - SJGS Final ETA Depcom | (16,567) | (253,803) |
| 92 | Regulatory Assets - SJGS Final ETA Mine Rec | (33,290) | (6,416,422) |
| 93 | Regulatory Assets - SJGS Replacement Resources | (324) | (1,982,636) |
| 94 | Regulatory Assets - SJGS Undepreciated Investment | - | - |
| 95 | Regulatory Assets - SJGS Underground Coal Mine | - | - |
| 96 | Regulatory Assets - Solar Direct Regulatory Assets | (65) | 23,833 |
| 97 | Regulatory Assets - TOD Rate Pilot Program | - | (280,892) |
| 98 | Regulatory Assets - Transportation Electrification | (232,430) | (1,845,877) |

| | A | D | E |
|---|---|---|---|
| 1 | **Public Service Company of New Mexico** | | |
| 2 | **Schedule H-12** | | |
| 3 | **Accumulated Tax Deferrals** | | |
| 4 | **Base Period Ending 6/30/2026** | | |
| 5 | **Test Period Ending 9/30/2028** | | |
| 6 | **This schedule is sponsored by PNM Witness Morris** | | |
| 7 | | | |
| 8 | | | |
| 9 | | | **31-Jul-25** |
| 10 | | **Credits** | **Balance** |
| 99 | Regulatory Assets - WCC Transaction Costs | - | - |
| 100 | Regulatory Liabilities - Energy Efficiency | (730) | 935,160 |
| 101 | Regulatory Liabilities - FAC | - | - |
| 102 | Regulatory Assets - PCB Refinancing Hedge | (823) | (1,910,623) |
| 103 | Prepaid Expenses: Production | - | (569,461) |
| 104 | Prepaid Expenses: Transmission | - | (3,444,231) |
| 105 | Prepaid Expenses: Transmission (incremental FERC Rates) | - | - |
| 106 | Prepaid Expenses: Distribution | - | (175,403) |
| 107 | Prepaid Expenses: Renewables | - | - |
| 108 | Regulatory Assets - 2024 Rate Change | (942) | (848,801) |
| 109 | Regulatory Assets - 2025 Rate Change | (527,076) | (503,872) |
| 110 | Regulatory Assets - SJGS Obsolete Inventory | (245) | (1,500,262) |
| 111 | Regulatory Liabilities - Earnings Test | - | - |
| 112 | Regulatory Assets - PVNGS Lease costs | - | - |
| 113 | Regulatory Assets - PVNGS Undepreciated Investment | (4,248) | (20,432,017) |
| 114 | Regulatory Assets - ETC Over/Under SPE | - | - |
| 115 | Regulatory Assets - PVNGS Replacement Resources | (101) | (485,932) |
| 116 | Regulatory Assets - Rate Rider 12 UG Rate | (2,093) | (625,892) |
| 117 | Regulatory Assets - Renewable Rider Curr Reg | - | - |
| 118 | Regulatory Assets - SJ Energy Transition Property (SPE) | (6,721) | (84,349,522) |
| 119 | Regulatory Liabilities - Curr Reg Liab-UG Rate Rider 12 | - | - |
| 120 | Regulatory Liabilities - ITC Sandia | | - |
| 121 | Regulatory Liabilities - ITC Sunbelt | | - |
| 122 | Regulatory Liabilities - ITC - Distribution Battery Phase 2 | | - |
| 123 | Regulatory Liabilities - Energy Transition Cost True Up | (164) | 308,512 |
| 124 | Regulatory Liabilities - SJGS Retirements Rate Credit | (8) | 20,296 |
| 125 | Regulatory Liabilities - PVNGS Lease Costs | (457,584) | 2,872,660 |
| 126 | Deferred Debits - WS-Transmission Revenue | - | (8,132,577) |
| 127 | Customer Advance | - | - |
| 128 | Deferred Credits - ETA | - | - |
| 129 | Other Liabilities - ETA Coal Mine Severance | - | - |
| 130 | Other Liabilities - ETA State Agency Payments | - | - |
| 131 | SJGS County Ordinance Decommission | - | - |
| 132 | | | |
| 133 | **Total Accumulated Deferred Income Taxes** | (26,728,197) | (690,272,626) |
| 134 | | | |
| 135 | General Ledger ADIT Balance | | (690,272,627) |
| 136 | | | |
| 137 | Difference (Rounding) | | 0 |

| | A | F | G |
|---|---|---|---|
| 1 | **Public Service Company of New Mexico** | | |
| 2 | **Schedule H-12** | | |
| 3 | **Accumulated Tax Deferrals** | | |
| 4 | **Base Period Ending 6/30/2026** | | |
| 5 | **Test Period Ending 9/30/2028** | | |
| 6 | **This schedule is sponsored by PNM Witness Morris** | | |
| 7 | | | |
| 8 | | | |
| 9 | | | |
| 10 | | **Debits** | **Credits** |
| 11 | **Accumulated Deferred Income Taxes** | | |
| 12 | Federal Tax Credit Carryforward | 95,070 | - |
| 13 | Federal Tax Credit Carryforward - Renewables | - | - |
| 14 | Net Operating Loss (NOL) | 1,410,705 | (7,799,236) |
| 15 | Incentive Pay Plans | - | - |
| 16 | Regulatory Assets - Coal Mine Decommissioning | - | - |
| 17 | Regulatory Liabilities - Renewable Rider | 343,015 | (19,158) |
| 18 | Income Tax Regulatory Liability | 2,189,837 | (2,753,217) |
| 19 | Income Tax Regulatory Asset | 45,872 | (2,019) |
| 20 | Investment Tax Credit 2024 | - | - |
| 21 | Investment Tax Credit - Sandia | - | - |
| 22 | Investment Tax Credit - Sunbelt | - | - |
| 23 | Investment Tax Credit - Distribution Battery Phase 2 | - | - |
| 24 | Lease Liability | - | - |
| 25 | Deferred Credits - Coal Mine Decommissioning | 11,706 | (265,911) |
| 26 | Regulatory Assets - ETA Carrying Charges | - | - |
| 27 | Regulatory Assets - ETA Job Training & Severance | - | - |
| 28 | Regulatory Assets - ETA Payments to State Agencies | - | - |
| 29 | Regulatory Assets - ETA SJGS Plant Decommissioning | - | - |
| 30 | Regulatory Assets - ETA SJGS upfront Financing Cost | - | - |
| 31 | Regulatory Assets - ETA Westmoreland Coal Mine Sev | - | - |
| 32 | Deferred Credits - Joint Use | - | - |
| 33 | Deferred Credits - Pathnet | - | - |
| 34 | Deferred Credits - PVNGS Dry Casks | 66,804 | (2,941) |
| 35 | Other Deferred Credits | 51,180 | (2,330) |
| 36 | Other Liabilities - ETA Job Training and Severance | - | - |
| 37 | Other Liabilities - Navajo Workforce Training | - | - |
| 38 | Other Liabilities | 87,486 | (56,511) |
| 39 | Blackstone Transaction Costs | 64,752 | (2,851) |
| 40 | Injury and Damages | 40,470 | (2,760) |
| 41 | Plant - AFUDC | 30,256 | (628,307) |
| 42 | Plant - Capitalized Interest | 264,800 | (20,630) |
| 43 | Decommissioning and Reclamation Trusts | 62,724 | (1,052,077) |
| 44 | ASC 740-10 (FIN 48) Reclassifications | - | - |
| 45 | Estimated Tax Rate Adjustment | 8,701,625 | (3,589,045) |
| 46 | PVNGS Licensing | - | - |
| 47 | Plant - 263A Adjustment | 67,295 | (1,528,611) |
| 48 | Deferred State Taxes | - | - |
| 49 | Plant - CIAC | 450,221 | (19,820) |
| 50 | Plant - Depreciation Nuclear Fuel | 438,743 | (477,563) |
| 51 | Plant - Removal Cost | 120,744 | (5,316) |
| 52 | Plant - Repairs | 45,137 | (1,025,308) |
| 53 | Plant - Section 174 Deduction | 281,457 | (12,391) |
| 54 | Plant - Asset Retirement Obligation | 18,325 | (53,241) |

| | A | F | G |
|---|---|---|---|
| 1 | **Public Service Company of New Mexico** | | |
| 2 | **Schedule H-12** | | |
| 3 | **Accumulated Tax Deferrals** | | |
| 4 | **Base Period Ending 6/30/2026** | | |
| 5 | **Test Period Ending 9/30/2028** | | |
| 6 | **This schedule is sponsored by PNM Witness Morris** | | |
| 7 | | | |
| 8 | | | |
| 9 | | | |
| 10 | | **Debits** | **Credits** |
| 55 | Plant - Pollution Control Property | - | - |
| 56 | Plant - Liberalized Depreciation: Production | 1,583,957 | (1,391,540) |
| 57 | Plant - Liberalized Depreciation: Transmission | - | (203,543) |
| 58 | Plant - Liberalized Depreciation: Distribution | - | (1,020,662) |
| 59 | Plant - Liberalized Depreciation: General and Intangible | 44,680 | - |
| 60 | Plant - Liberalized Depreciation: Grid Mod | - | (13,443) |
| 61 | Plant - Liberalized Depreciation: Renewables | - | (103,069) |
| 62 | Plant - Four Corners Imprudence | - | - |
| 63 | Regulatory Assets - SJGS Stranded Costs Units 2&3 | 138,982 | (6,118) |
| 64 | Pension | 29,784 | (10,967) |
| 65 | Retiree Medical | 3,171 | (72,031) |
| 66 | Lease Asset | - | - |
| 67 | Loss on Reacquired Debt | 8,660 | (381) |
| 68 | Other Comprehensive Income (OCI) | - | (116,300) |
| 69 | Deferred Credits - SO2 Allowance | - | - |
| 70 | Deferred Debits - Rate Case Expense | - | - |
| 71 | Deferred Debits - Decoupling | - | - |
| 72 | Deferred Debits - Grid Modernization | 2,374 | (53,935) |
| 73 | Deferred Debits - RR Underground Rider | - | - |
| 74 | Energy Storage Agreement | 2,173 | (49,360) |
| 75 | Energy Transition Charges | 1,393 | (31,640) |
| 76 | Prepaid Expenses | 720,828 | (579,234) |
| 77 | Regulatory Assets - 2024 COVID Bad Debt | - | - |
| 78 | Regulatory Assets - COVID-19 Costs | 38,284 | (1,685) |
| 79 | Regulatory Assets - Community Solar | 1,113 | (25,293) |
| 80 | Regulatory assets - FAC | 127,990 | (2,384,267) |
| 81 | Regulatory Assets - EDAM Costs | - | - |
| 82 | Regulatory Assets - EIM Costs | 83,212 | (3,663) |
| 83 | Regulatory Assets - Energy Efficiency | 862,293 | (37,961) |
| 84 | Regulatory Assets - ETA | - | - |
| 85 | Regulatory Assets - FERC 893 Cyber | - | - |
| 86 | Regulatory Assets - IRP | - | - |
| 87 | Regulatory Assets - Sky Blue Under Recovery | - | - |
| 88 | Regulatory Assets - Renewable Energy | 10,459 | (460) |
| 89 | Regulatory Assets - Renewable Energy Credits | - | - |
| 90 | Regulatory Assets - SJGS External Legal Fees | 438 | (19) |
| 91 | Regulatory Assets - SJGS Final ETA Depcom | 702 | (15,955) |
| 92 | Regulatory Assets - SJGS Final ETA Mine Rec | 1,529 | (34,729) |
| 93 | Regulatory Assets - SJGS Replacement Resources | 7,367 | (324) |
| 94 | Regulatory Assets - SJGS Undepreciated Investment | - | - |
| 95 | Regulatory Assets - SJGS Underground Coal Mine | - | - |
| 96 | Regulatory Assets - Solar Direct Regulatory Assets | 736 | (32) |
| 97 | Regulatory Assets - TOD Rate Pilot Program | - | - |
| 98 | Regulatory Assets - Transportation Electrification | 4,508 | (102,405) |

| | A | F | G |
|---|---|---|---|
| 1 | **Public Service Company of New Mexico** | | |
| 2 | **Schedule H-12** | | |
| 3 | **Accumulated Tax Deferrals** | | |
| 4 | **Base Period Ending 6/30/2026** | | |
| 5 | **Test Period Ending 9/30/2028** | | |
| 6 | **This schedule is sponsored by PNM Witness Morris** | | |
| 7 | | | |
| 8 | | | |
| 9 | | | |
| 10 | | **Debits** | **Credits** |
| 99 | Regulatory Assets - WCC Transaction Costs | - | - |
| 100 | Regulatory Liabilities - Energy Efficiency | 6,686 | (151,863) |
| 101 | Regulatory Liabilities - FAC | - | - |
| 102 | Regulatory Assets - PCB Refinancing Hedge | 18,697 | (823) |
| 103 | Prepaid Expenses: Production | 95,210 | - |
| 104 | Prepaid Expenses: Transmission | 428,346 | - |
| 105 | Prepaid Expenses: Transmission (incremental FERC Rates) | - | - |
| 106 | Prepaid Expenses: Distribution | 23,944 | - |
| 107 | Prepaid Expenses: Renewables | - | - |
| 108 | Regulatory Assets - 2024 Rate Change | 21,395 | (942) |
| 109 | Regulatory Assets - 2025 Rate Change | 8,933 | (393) |
| 110 | Regulatory Assets - SJGS Obsolete Inventory | 5,575 | (245) |
| 111 | Regulatory Liabilities - Earnings Test | - | - |
| 112 | Regulatory Assets - PVNGS Lease costs | - | - |
| 113 | Regulatory Assets - PVNGS Undepreciated Investment | 96,493 | (4,248) |
| 114 | Regulatory Assets - ETC Over/Under SPE | - | - |
| 115 | Regulatory Assets - PVNGS Replacement Resources | 2,295 | (101) |
| 116 | Regulatory Assets - Rate Rider 12 UG Rate | 47,532 | (2,093) |
| 117 | Regulatory Assets - Renewable Rider Curr Reg | - | - |
| 118 | Regulatory Assets - SJ Energy Transition Property (SPE) | 154,858 | (6,817) |
| 119 | Regulatory Liabilities - Curr Reg Liab-UG Rate Rider 12 | - | - |
| 120 | Regulatory Liabilities - ITC Sandia | - | - |
| 121 | Regulatory Liabilities - ITC Sunbelt | - | - |
| 122 | Regulatory Liabilities - ITC - Distribution Battery Phase 2 | - | - |
| 123 | Regulatory Liabilities - Energy Transition Cost True Up | 51 | (1,165) |
| 124 | Regulatory Liabilities - SJGS Retirements Rate Credit | 2 | (42) |
| 125 | Regulatory Liabilities - PVNGS Lease Costs | 20,352 | (462,299) |
| 126 | Deferred Debits - WS-Transmission Revenue | - | - |
| 127 | Customer Advance | - | - |
| 128 | Deferred Credits - ETA | - | - |
| 129 | Other Liabilities - ETA Coal Mine Severance | - | - |
| 130 | Other Liabilities - ETA State Agency Payments | - | - |
| 131 | SJGS County Ordinance Decommission | - | - |
| 132 | | | |
| 133 | **Total Accumulated Deferred Income Taxes** | 19,493,230 | (26,209,296) |
| 134 | | | |
| 135 | General Ledger ADIT Balance | | |
| 136 | | | |
| 137 | Difference (Rounding) | | |

| | A | H | I |
|---|---|---|---|
| 1 | **Public Service Company of New Mexico** | | |
| 2 | **Schedule H-12** | | |
| 3 | **Accumulated Tax Deferrals** | | |
| 4 | **Base Period Ending 6/30/2026** | | |
| 5 | **Test Period Ending 9/30/2028** | | |
| 6 | **This schedule is sponsored by PNM Witness Morris** | | |
| 7 | | | |
| 8 | | | |
| 9 | | **31-Aug-25** | |
| 10 | | **Balance** | **Debits** |
| 11 | **Accumulated Deferred Income Taxes** | | |
| 12 | Federal Tax Credit Carryforward | 20,577,317 | 63,751 |
| 13 | Federal Tax Credit Carryforward - Renewables | 69,083,272 | - |
| 14 | Net Operating Loss (NOL) | 17,095,090 | 258,200 |
| 15 | Incentive Pay Plans | 3,715,566 | 198,334 |
| 16 | Regulatory Assets - Coal Mine Decommissioning | - | - |
| 17 | Regulatory Liabilities - Renewable Rider | 2,206,007 | 518,357 |
| 18 | Income Tax Regulatory Liability | 57,613,645 | 2,028,051 |
| 19 | Income Tax Regulatory Asset | (65,669,740) | 30,027 |
| 20 | Investment Tax Credit 2024 | 7,393,757 | - |
| 21 | Investment Tax Credit - Sandia | - | - |
| 22 | Investment Tax Credit - Sunbelt | - | - |
| 23 | Investment Tax Credit - Distribution Battery Phase 2 | - | - |
| 24 | Lease Liability | 71,582,279 | - |
| 25 | Deferred Credits - Coal Mine Decommissioning | 20,691,950 | 27,071 |
| 26 | Regulatory Assets - ETA Carrying Charges | - | - |
| 27 | Regulatory Assets - ETA Job Training & Severance | - | - |
| 28 | Regulatory Assets - ETA Payments to State Agencies | - | - |
| 29 | Regulatory Assets - ETA SJGS Plant Decommissioning | - | - |
| 30 | Regulatory Assets - ETA SJGS upfront Financing Cost | - | - |
| 31 | Regulatory Assets - ETA Westmoreland Coal Mine Sev | - | - |
| 32 | Deferred Credits - Joint Use | 8,299 | - |
| 33 | Deferred Credits - Pathnet | 1,431,706 | - |
| 34 | Deferred Credits - PVNGS Dry Casks | 3,817,649 | 72,361 |
| 35 | Other Deferred Credits | 2,869,115 | 120,657 |
| 36 | Other Liabilities - ETA Job Training and Severance | 18,584 | - |
| 37 | Other Liabilities - Navajo Workforce Training | 25,400 | - |
| 38 | Other Liabilities | 1,570,407 | 34,404 |
| 39 | Blackstone Transaction Costs | 188,753 | 48,511 |
| 40 | Injury and Damages | 977,529 | 24,266 |
| 41 | Plant - AFUDC | (32,946,736) | 31,399 |
| 42 | Plant - Capitalized Interest | 11,893,953 | 264,801 |
| 43 | Decommissioning and Reclamation Trusts | (94,321,953) | 62,724 |
| 44 | ASC 740-10 (FIN 48) Reclassifications | 63,805 | - |
| 45 | Estimated Tax Rate Adjustment | 1,587,470 | 4,288,745 |
| 46 | PVNGS Licensing | 30,368 | - |
| 47 | Plant - 263A Adjustment | (62,135,862) | 67,295 |
| 48 | Deferred State Taxes | 3,946,510 | - |
| 49 | Plant - CIAC | 20,869,415 | 450,221 |
| 50 | Plant - Depreciation Nuclear Fuel | 7,236,813 | 438,743 |
| 51 | Plant - Removal Cost | (6,323,767) | 120,744 |
| 52 | Plant - Repairs | (95,736,712) | 45,137 |
| 53 | Plant - Section 174 Deduction | 6,074,907 | 281,457 |
| 54 | Plant - Asset Retirement Obligation | 91,416,843 | 18,325 |

| | A | H | I |
|---|---|---|---|
| 1 | **Public Service Company of New Mexico** | | |
| 2 | **Schedule H-12** | | |
| 3 | **Accumulated Tax Deferrals** | | |
| 4 | **Base Period Ending 6/30/2026** | | |
| 5 | **Test Period Ending 9/30/2028** | | |
| 6 | **This schedule is sponsored by PNM Witness Morris** | | |
| 7 | | | |
| 8 | | | |
| 9 | | **31-Aug-25** | |
| 10 | | **Balance** | **Debits** |
| 55 | Plant - Pollution Control Property | (2,154,701) | - |
| 56 | Plant - Liberalized Depreciation: Production | (121,251,440) | 2,663,957 |
| 57 | Plant - Liberalized Depreciation: Transmission | (153,361,687) | 147,792 |
| 58 | Plant - Liberalized Depreciation: Distribution | (143,342,520) | - |
| 59 | Plant - Liberalized Depreciation: General and Intangible | (10,564,284) | 199,576 |
| 60 | Plant - Liberalized Depreciation: Grid Mod | (1,887,997) | - |
| 61 | Plant - Liberalized Depreciation: Renewables | (48,463,517) | - |
| 62 | Plant - Four Corners Imprudence | - | - |
| 63 | Regulatory Assets - SJGS Stranded Costs Units 2&3 | (19,796,660) | 138,982 |
| 64 | Pension | (62,378,214) | 29,784 |
| 65 | Retiree Medical | (9,712,672) | 3,171 |
| 66 | Lease Asset | (72,386,872) | - |
| 67 | Loss on Reacquired Debt | (1,074,792) | 8,660 |
| 68 | Other Comprehensive Income (OCI) | 25,610,494 | - |
| 69 | Deferred Credits - SO2 Allowance | - | - |
| 70 | Deferred Debits - Rate Case Expense | (580,164) | - |
| 71 | Deferred Debits - Decoupling | - | - |
| 72 | Deferred Debits - Grid Modernization | (664,466) | 6,643 |
| 73 | Deferred Debits - RR Underground Rider | - | - |
| 74 | Energy Storage Agreement | (47,187) | 264,226 |
| 75 | Energy Transition Charges | 1,101,642 | 2,056 |
| 76 | Prepaid Expenses | (733,581) | 661,019 |
| 77 | Regulatory Assets - 2024 COVID Bad Debt | - | - |
| 78 | Regulatory Assets - COVID-19 Costs | (623,453) | 23,928 |
| 79 | Regulatory Assets - Community Solar | (451,513) | 686 |
| 80 | Regulatory assets - FAC | (8,902,813) | 2,411,678 |
| 81 | Regulatory Assets - EDAM Costs | - | - |
| 82 | Regulatory Assets - EIM Costs | (3,221,704) | 83,212 |
| 83 | Regulatory Assets - Energy Efficiency | 679,155 | 47,308 |
| 84 | Regulatory Assets - ETA | - | - |
| 85 | Regulatory Assets - FERC 893 Cyber | - | - |
| 86 | Regulatory Assets - IRP | - | - |
| 87 | Regulatory Assets - Sky Blue Under Recovery | - | - |
| 88 | Regulatory Assets - Renewable Energy | (76,837) | 7,829 |
| 89 | Regulatory Assets - Renewable Energy Credits | - | - |
| 90 | Regulatory Assets - SJGS External Legal Fees | (117,520) | 438 |
| 91 | Regulatory Assets - SJGS Final ETA Depcom | (269,055) | 714 |
| 92 | Regulatory Assets - SJGS Final ETA Mine Rec | (6,449,622) | 3,524 |
| 93 | Regulatory Assets - SJGS Replacement Resources | (1,975,593) | 7,367 |
| 94 | Regulatory Assets - SJGS Undepreciated Investment | - | - |
| 95 | Regulatory Assets - SJGS Underground Coal Mine | - | - |
| 96 | Regulatory Assets - Solar Direct Regulatory Assets | 24,536 | 736 |
| 97 | Regulatory Assets - TOD Rate Pilot Program | (280,892) | 2,749 |
| 98 | Regulatory Assets - Transportation Electrification | (1,943,774) | 862 |

| | A | H | I |
|---|---|---|---|
| 1 | **Public Service Company of New Mexico** | | |
| 2 | **Schedule H-12** | | |
| 3 | **Accumulated Tax Deferrals** | | |
| 4 | **Base Period Ending 6/30/2026** | | |
| 5 | **Test Period Ending 9/30/2028** | | |
| 6 | **This schedule is sponsored by PNM Witness Morris** | | |
| 7 | | | |
| 8 | | | |
| 9 | | **31-Aug-25** | |
| 10 | | **Balance** | **Debits** |
| 99 | Regulatory Assets - WCC Transaction Costs | - | - |
| 100 | Regulatory Liabilities - Energy Efficiency | 789,982 | 721,614 |
| 101 | Regulatory Liabilities - FAC | - | - |
| 102 | Regulatory Assets - PCB Refinancing Hedge | (1,892,749) | 18,697 |
| 103 | Prepaid Expenses: Production | (474,251) | 88,446 |
| 104 | Prepaid Expenses: Transmission | (3,015,885) | 387,546 |
| 105 | Prepaid Expenses: Transmission (incremental FERC Rates) | - | - |
| 106 | Prepaid Expenses: Distribution | (151,458) | 17,324 |
| 107 | Prepaid Expenses: Renewables | - | - |
| 108 | Regulatory Assets - 2024 Rate Change | (828,348) | 21,395 |
| 109 | Regulatory Assets - 2025 Rate Change | (495,332) | 8,934 |
| 110 | Regulatory Assets - SJGS Obsolete Inventory | (1,494,932) | 5,575 |
| 111 | Regulatory Liabilities - Earnings Test | - | - |
| 112 | Regulatory Assets - PVNGS Lease costs | - | - |
| 113 | Regulatory Assets - PVNGS Undepreciated Investment | (20,339,772) | 96,493 |
| 114 | Regulatory Assets - ETC Over/Under SPE | - | - |
| 115 | Regulatory Assets - PVNGS Replacement Resources | (483,738) | 2,295 |
| 116 | Regulatory Assets - Rate Rider 12 UG Rate | (580,452) | 47,677 |
| 117 | Regulatory Assets - Renewable Rider Curr Reg | - | - |
| 118 | Regulatory Assets - SJ Energy Transition Property (SPE) | (84,201,482) | 157,046 |
| 119 | Regulatory Liabilities - Curr Reg Liab-UG Rate Rider 12 | - | - |
| 120 | Regulatory Liabilities - ITC Sandia | - | - |
| 121 | Regulatory Liabilities - ITC Sunbelt | - | - |
| 122 | Regulatory Liabilities - ITC - Distribution Battery Phase 2 | - | - |
| 123 | Regulatory Liabilities - Energy Transition Cost True Up | 307,398 | 51 |
| 124 | Regulatory Liabilities - SJGS Retirements Rate Credit | 20,256 | 21 |
| 125 | Regulatory Liabilities - PVNGS Lease Costs | 2,430,713 | 20,222 |
| 126 | Deferred Debits - WS-Transmission Revenue | (8,132,577) | - |
| 127 | Customer Advance | - | - |
| 128 | Deferred Credits - ETA | - | - |
| 129 | Other Liabilities - ETA Coal Mine Severance | - | - |
| 130 | Other Liabilities - ETA State Agency Payments | - | - |
| 131 | SJGS County Ordinance Decommission | - | - |
| 132 | | | |
| 133 | **Total Accumulated Deferred Income Taxes** | (696,988,692) | 17,803,811 |
| 134 | | | |
| 135 | General Ledger ADIT Balance | (696,988,692) | |
| 136 | | | |
| 137 | Difference (Rounding) | 0 | |

| | A | J | K |
|---|---|---|---|
| 1 | **Public Service Company of New Mexico** | | |
| 2 | **Schedule H-12** | | |
| 3 | **Accumulated Tax Deferrals** | | |
| 4 | **Base Period Ending 6/30/2026** | | |
| 5 | **Test Period Ending 9/30/2028** | | |
| 6 | **This schedule is sponsored by PNM Witness Morris** | | |
| 7 | | | |
| 8 | | | |
| 9 | | | **30-Sep-25** |
| 10 | | **Credits** | **Balance** |
| 11 | **Accumulated Deferred Income Taxes** | | |
| 12 | Federal Tax Credit Carryforward | - | 20,641,068 |
| 13 | Federal Tax Credit Carryforward - Renewables | - | 69,083,272 |
| 14 | Net Operating Loss (NOL) | (5,635,064) | 11,718,226 |
| 15 | Incentive Pay Plans | (8,731) | 3,905,168 |
| 16 | Regulatory Assets - Coal Mine Decommissioning | - | - |
| 17 | Regulatory Liabilities - Renewable Rider | (26,877) | 2,697,488 |
| 18 | Income Tax Regulatory Liability | (2,599,293) | 57,042,404 |
| 19 | Income Tax Regulatory Asset | (1,322) | (65,641,034) |
| 20 | Investment Tax Credit 2024 | - | 7,393,757 |
| 21 | Investment Tax Credit - Sandia | - | - |
| 22 | Investment Tax Credit - Sunbelt | - | - |
| 23 | Investment Tax Credit - Distribution Battery Phase 2 | - | - |
| 24 | Lease Liability | - | 71,582,279 |
| 25 | Deferred Credits - Coal Mine Decommissioning | (614,918) | 20,104,103 |
| 26 | Regulatory Assets - ETA Carrying Charges | - | - |
| 27 | Regulatory Assets - ETA Job Training & Severance | - | - |
| 28 | Regulatory Assets - ETA Payments to State Agencies | - | - |
| 29 | Regulatory Assets - ETA SJGS Plant Decommissioning | - | - |
| 30 | Regulatory Assets - ETA SJGS upfront Financing Cost | - | - |
| 31 | Regulatory Assets - ETA Westmoreland Coal Mine Sev | - | - |
| 32 | Deferred Credits - Joint Use | - | 8,299 |
| 33 | Deferred Credits - Pathnet | - | 1,431,706 |
| 34 | Deferred Credits - PVNGS Dry Casks | (3,186) | 3,886,824 |
| 35 | Other Deferred Credits | (5,313) | 2,984,459 |
| 36 | Other Liabilities - ETA Job Training and Severance | - | 18,584 |
| 37 | Other Liabilities - Navajo Workforce Training | - | 25,400 |
| 38 | Other Liabilities | (18,511) | 1,586,300 |
| 39 | Blackstone Transaction Costs | (2,136) | 235,128 |
| 40 | Injury and Damages | (76,314) | 925,480 |
| 41 | Plant - AFUDC | (713,237) | (33,628,574) |
| 42 | Plant - Capitalized Interest | (20,630) | 12,138,124 |
| 43 | Decommissioning and Reclamation Trusts | (1,052,077) | (95,311,307) |
| 44 | ASC 740-10 (FIN 48) Reclassifications | - | 63,805 |
| 45 | Estimated Tax Rate Adjustment | (2,424,607) | 3,451,607 |
| 46 | PVNGS Licensing | - | 30,368 |
| 47 | Plant - 263A Adjustment | (1,528,611) | (63,597,178) |
| 48 | Deferred State Taxes | - | 3,946,510 |
| 49 | Plant - CIAC | (19,820) | 21,299,816 |
| 50 | Plant - Depreciation Nuclear Fuel | (477,563) | 7,197,993 |
| 51 | Plant - Removal Cost | (5,316) | (6,208,339) |
| 52 | Plant - Repairs | (1,025,308) | (96,716,882) |
| 53 | Plant - Section 174 Deduction | (12,391) | 6,343,973 |
| 54 | Plant - Asset Retirement Obligation | (53,241) | 91,381,927 |

| | A | J | K |
|---|---|---|---|
| 1 | **Public Service Company of New Mexico** | | |
| 2 | **Schedule H-12** | | |
| 3 | **Accumulated Tax Deferrals** | | |
| 4 | **Base Period Ending 6/30/2026** | | |
| 5 | **Test Period Ending 9/30/2028** | | |
| 6 | **This schedule is sponsored by PNM Witness Morris** | | |
| 7 | | | |
| 8 | | | |
| 9 | | | **30-Sep-25** |
| 10 | | **Credits** | **Balance** |
| 55 | Plant - Pollution Control Property | - | (2,154,701) |
| 56 | Plant - Liberalized Depreciation: Production | (2,184,269) | (120,771,752) |
| 57 | Plant - Liberalized Depreciation: Transmission | - | (153,213,895) |
| 58 | Plant - Liberalized Depreciation: Distribution | (1,803,849) | (145,146,369) |
| 59 | Plant - Liberalized Depreciation: General and Intangible | - | (10,364,708) |
| 60 | Plant - Liberalized Depreciation: Grid Mod | (23,759) | (1,911,756) |
| 61 | Plant - Liberalized Depreciation: Renewables | (103,069) | (48,566,585) |
| 62 | Plant - Four Corners Imprudence | - | - |
| 63 | Regulatory Assets - SJGS Stranded Costs Units 2&3 | (6,118) | (19,663,797) |
| 64 | Pension | (10,967) | (62,359,396) |
| 65 | Retiree Medical | (72,031) | (9,781,532) |
| 66 | Lease Asset | - | (72,386,872) |
| 67 | Loss on Reacquired Debt | (381) | (1,066,514) |
| 68 | Other Comprehensive Income (OCI) | (82,976) | 25,527,518 |
| 69 | Deferred Credits - SO2 Allowance | - | - |
| 70 | Deferred Debits - Rate Case Expense | - | (580,164) |
| 71 | Deferred Debits - Decoupling | - | - |
| 72 | Deferred Debits - Grid Modernization | (150,896) | (808,719) |
| 73 | Deferred Debits - RR Underground Rider | - | - |
| 74 | Energy Storage Agreement | (11,632) | 205,406 |
| 75 | Energy Transition Charges | (46,698) | 1,056,999 |
| 76 | Prepaid Expenses | (522,416) | (594,979) |
| 77 | Regulatory Assets - 2024 COVID Bad Debt | - | - |
| 78 | Regulatory Assets - COVID-19 Costs | (1,053) | (600,579) |
| 79 | Regulatory Assets - Community Solar | (15,576) | (466,403) |
| 80 | Regulatory assets - FAC | (106,170) | (6,597,305) |
| 81 | Regulatory Assets - EDAM Costs | - | - |
| 82 | Regulatory Assets - EIM Costs | (3,663) | (3,142,156) |
| 83 | Regulatory Assets - Energy Efficiency | (1,074,606) | (348,143) |
| 84 | Regulatory Assets - ETA | - | - |
| 85 | Regulatory Assets - FERC 893 Cyber | - | - |
| 86 | Regulatory Assets - IRP | - | - |
| 87 | Regulatory Assets - Sky Blue Under Recovery | - | - |
| 88 | Regulatory Assets - Renewable Energy | (345) | (69,353) |
| 89 | Regulatory Assets - Renewable Energy Credits | - | - |
| 90 | Regulatory Assets - SJGS External Legal Fees | (19) | (117,101) |
| 91 | Regulatory Assets - SJGS Final ETA Depcom | (16,221) | (284,562) |
| 92 | Regulatory Assets - SJGS Final ETA Mine Rec | (80,054) | (6,526,152) |
| 93 | Regulatory Assets - SJGS Replacement Resources | (324) | (1,968,550) |
| 94 | Regulatory Assets - SJGS Undepreciated Investment | - | - |
| 95 | Regulatory Assets - SJGS Underground Coal Mine | - | - |
| 96 | Regulatory Assets - Solar Direct Regulatory Assets | (32) | 25,239 |
| 97 | Regulatory Assets - TOD Rate Pilot Program | (62,440) | (340,582) |
| 98 | Regulatory Assets - Transportation Electrification | (19,569) | (1,962,482) |

| | A | J | K |
|---|---|---|---|
| 1 | **Public Service Company of New Mexico** | | |
| 2 | **Schedule H-12** | | |
| 3 | **Accumulated Tax Deferrals** | | |
| 4 | **Base Period Ending 6/30/2026** | | |
| 5 | **Test Period Ending 9/30/2028** | | |
| 6 | **This schedule is sponsored by PNM Witness Morris** | | |
| 7 | | | |
| 8 | | | |
| 9 | | | **30-Sep-25** |
| 10 | | **Credits** | **Balance** |
| 99 | Regulatory Assets - WCC Transaction Costs | - | - |
| 100 | Regulatory Liabilities - Energy Efficiency | (31,768) | 1,479,829 |
| 101 | Regulatory Liabilities - FAC | - | - |
| 102 | Regulatory Assets - PCB Refinancing Hedge | (823) | (1,874,875) |
| 103 | Prepaid Expenses: Production | - | (385,805) |
| 104 | Prepaid Expenses: Transmission | - | (2,628,338) |
| 105 | Prepaid Expenses: Transmission (incremental FERC Rates) | - | - |
| 106 | Prepaid Expenses: Distribution | - | (134,135) |
| 107 | Prepaid Expenses: Renewables | - | - |
| 108 | Regulatory Assets - 2024 Rate Change | (942) | (807,895) |
| 109 | Regulatory Assets - 2025 Rate Change | (393) | (486,792) |
| 110 | Regulatory Assets - SJGS Obsolete Inventory | (245) | (1,489,603) |
| 111 | Regulatory Liabilities - Earnings Test | - | - |
| 112 | Regulatory Assets - PVNGS Lease costs | - | - |
| 113 | Regulatory Assets - PVNGS Undepreciated Investment | (4,248) | (20,247,527) |
| 114 | Regulatory Assets - ETC Over/Under SPE | - | - |
| 115 | Regulatory Assets - PVNGS Replacement Resources | (101) | (481,544) |
| 116 | Regulatory Assets - Rate Rider 12 UG Rate | (2,099) | (534,874) |
| 117 | Regulatory Assets - Renewable Rider Curr Reg | - | - |
| 118 | Regulatory Assets - SJ Energy Transition Property (SPE) | (6,914) | (84,051,350) |
| 119 | Regulatory Liabilities - Curr Reg Liab-UG Rate Rider 12 | - | - |
| 120 | Regulatory Liabilities - ITC Sandia | - | - |
| 121 | Regulatory Liabilities - ITC Sunbelt | - | - |
| 122 | Regulatory Liabilities - ITC - Distribution Battery Phase 2 | - | - |
| 123 | Regulatory Liabilities - Energy Transition Cost True Up | (1,165) | 306,285 |
| 124 | Regulatory Liabilities - SJGS Retirements Rate Credit | (486) | 19,792 |
| 125 | Regulatory Liabilities - PVNGS Lease Costs | (459,346) | 1,991,589 |
| 126 | Deferred Debits - WS-Transmission Revenue | - | (8,132,577) |
| 127 | Customer Advance | - | - |
| 128 | Deferred Credits - ETA | - | - |
| 129 | Other Liabilities - ETA Coal Mine Severance | - | - |
| 130 | Other Liabilities - ETA State Agency Payments | - | - |
| 131 | SJGS County Ordinance Decommission | - | - |
| 132 | | | |
| 133 | **Total Accumulated Deferred Income Taxes** | (23,232,129) | (702,417,010) |
| 134 | | | |
| 135 | General Ledger ADIT Balance | | (702,417,010) |
| 136 | | | |
| 137 | Difference (Rounding) | | 0 |

| | A | L | M |
|---|---|---|---|
| 1 | **Public Service Company of New Mexico** | | |
| 2 | **Schedule H-12** | | |
| 3 | **Accumulated Tax Deferrals** | | |
| 4 | **Base Period Ending 6/30/2026** | | |
| 5 | **Test Period Ending 9/30/2028** | | |
| 6 | **This schedule is sponsored by PNM Witness Morris** | | |
| 7 | | | |
| 8 | | | |
| 9 | | | |
| 10 | | **Debits** | **Credits** |
| 11 | **Accumulated Deferred Income Taxes** | | |
| 12 | Federal Tax Credit Carryforward | 89,998 | - |
| 13 | Federal Tax Credit Carryforward - Renewables | - | - |
| 14 | Net Operating Loss (NOL) | 4,595,233 | (201,253) |
| 15 | Incentive Pay Plans | - | - |
| 16 | Regulatory Assets - Coal Mine Decommissioning | - | - |
| 17 | Regulatory Liabilities - Renewable Rider | 4,745 | (107,792) |
| 18 | Income Tax Regulatory Liability | 2,323,906 | (2,983,013) |
| 19 | Income Tax Regulatory Asset | 33,318 | (1,467) |
| 20 | Investment Tax Credit 2024 | - | - |
| 21 | Investment Tax Credit - Sandia | - | - |
| 22 | Investment Tax Credit - Sunbelt | - | - |
| 23 | Investment Tax Credit - Distribution Battery Phase 2 | - | - |
| 24 | Lease Liability | - | - |
| 25 | Deferred Credits - Coal Mine Decommissioning | 17,537 | (398,358) |
| 26 | Regulatory Assets - ETA Carrying Charges | - | - |
| 27 | Regulatory Assets - ETA Job Training & Severance | - | - |
| 28 | Regulatory Assets - ETA Payments to State Agencies | - | - |
| 29 | Regulatory Assets - ETA SJGS Plant Decommissioning | - | - |
| 30 | Regulatory Assets - ETA SJGS upfront Financing Cost | - | - |
| 31 | Regulatory Assets - ETA Westmoreland Coal Mine Sev | - | - |
| 32 | Deferred Credits - Joint Use | - | - |
| 33 | Deferred Credits - Pathnet | - | - |
| 34 | Deferred Credits - PVNGS Dry Casks | 20,901 | (920) |
| 35 | Other Deferred Credits | 67,306 | (4,950) |
| 36 | Other Liabilities - ETA Job Training and Severance | - | - |
| 37 | Other Liabilities - Navajo Workforce Training | - | - |
| 38 | Other Liabilities | 102,288 | (29,176) |
| 39 | Blackstone Transaction Costs | 134,286 | (5,912) |
| 40 | Injury and Damages | 12,621 | (3,950) |
| 41 | Plant - AFUDC | 29,136 | (661,820) |
| 42 | Plant - Capitalized Interest | 264,801 | (20,630) |
| 43 | Decommissioning and Reclamation Trusts | 94,913 | (1,783,269) |
| 44 | ASC 740-10 (FIN 48) Reclassifications | - | - |
| 45 | Estimated Tax Rate Adjustment | 1,894,791 | (4,244,746) |
| 46 | PVNGS Licensing | - | - |
| 47 | Plant - 263A Adjustment | 67,295 | (1,528,611) |
| 48 | Deferred State Taxes | - | - |
| 49 | Plant - CIAC | 450,221 | (19,820) |
| 50 | Plant - Depreciation Nuclear Fuel | 438,743 | (477,563) |
| 51 | Plant - Removal Cost | 120,744 | (5,316) |
| 52 | Plant - Repairs | 45,137 | (1,025,308) |
| 53 | Plant - Section 174 Deduction | 281,457 | (12,391) |
| 54 | Plant - Asset Retirement Obligation | 18,325 | (53,241) |

| | A | L | M |
|---|---|---|---|
| 1 | **Public Service Company of New Mexico** | | |
| 2 | **Schedule H-12** | | |
| 3 | **Accumulated Tax Deferrals** | | |
| 4 | **Base Period Ending 6/30/2026** | | |
| 5 | **Test Period Ending 9/30/2028** | | |
| 6 | **This schedule is sponsored by PNM Witness Morris** | | |
| 7 | | | |
| 8 | | | |
| 9 | | | |
| 10 | | **Debits** | **Credits** |
| 55 | Plant - Pollution Control Property | - | - |
| 56 | Plant - Liberalized Depreciation: Production | 8,421,545 | (5,421,587) |
| 57 | Plant - Liberalized Depreciation: Transmission | - | (5,267,696) |
| 58 | Plant - Liberalized Depreciation: Distribution | 1,047,079 | - |
| 59 | Plant - Liberalized Depreciation: General and Intangible | 206,316 | - |
| 60 | Plant - Liberalized Depreciation: Grid Mod | 13,791 | - |
| 61 | Plant - Liberalized Depreciation: Renewables | - | (103,069) |
| 62 | Plant - Four Corners Imprudence | - | - |
| 63 | Regulatory Assets - SJGS Stranded Costs Units 2&3 | 138,982 | (6,118) |
| 64 | Pension | 29,784 | (10,967) |
| 65 | Retiree Medical | 3,171 | (72,031) |
| 66 | Lease Asset | - | - |
| 67 | Loss on Reacquired Debt | 8,660 | (381) |
| 68 | Other Comprehensive Income (OCI) | - | (116,300) |
| 69 | Deferred Credits - SO2 Allowance | - | - |
| 70 | Deferred Debits - Rate Case Expense | - | - |
| 71 | Deferred Debits - Decoupling | - | - |
| 72 | Deferred Debits - Grid Modernization | 5,343 | (121,373) |
| 73 | Deferred Debits - RR Underground Rider | - | - |
| 74 | Energy Storage Agreement | 280,625 | (12,354) |
| 75 | Energy Transition Charges | 3,388 | (76,955) |
| 76 | Prepaid Expenses | 692,378 | (808,683) |
| 77 | Regulatory Assets - 2024 COVID Bad Debt | - | - |
| 78 | Regulatory Assets - COVID-19 Costs | 23,928 | (1,053) |
| 79 | Regulatory Assets - Community Solar | 678 | (15,390) |
| 80 | Regulatory assets - FAC | 2,552,224 | (112,357) |
| 81 | Regulatory Assets - EDAM Costs | - | - |
| 82 | Regulatory Assets - EIM Costs | 83,212 | (3,663) |
| 83 | Regulatory Assets - Energy Efficiency | 491,036 | (21,617) |
| 84 | Regulatory Assets - ETA | - | - |
| 85 | Regulatory Assets - FERC 893 Cyber | - | - |
| 86 | Regulatory Assets - IRP | - | - |
| 87 | Regulatory Assets - Sky Blue Under Recovery | - | - |
| 88 | Regulatory Assets - Renewable Energy | 10,287 | (453) |
| 89 | Regulatory Assets - Renewable Energy Credits | - | - |
| 90 | Regulatory Assets - SJGS External Legal Fees | 438 | (19) |
| 91 | Regulatory Assets - SJGS Final ETA Depcom | 756 | (17,178) |
| 92 | Regulatory Assets - SJGS Final ETA Mine Rec | 1,994 | (45,294) |
| 93 | Regulatory Assets - SJGS Replacement Resources | 7,367 | (324) |
| 94 | Regulatory Assets - SJGS Undepreciated Investment | - | - |
| 95 | Regulatory Assets - SJGS Underground Coal Mine | - | - |
| 96 | Regulatory Assets - Solar Direct Regulatory Assets | 736 | (32) |
| 97 | Regulatory Assets - TOD Rate Pilot Program | - | - |
| 98 | Regulatory Assets - Transportation Electrification | 3,568 | (81,050) |

| | A | L | M |
|---|---|---|---|
| 1 | **Public Service Company of New Mexico** | | |
| 2 | **Schedule H-12** | | |
| 3 | **Accumulated Tax Deferrals** | | |
| 4 | **Base Period Ending 6/30/2026** | | |
| 5 | **Test Period Ending 9/30/2028** | | |
| 6 | **This schedule is sponsored by PNM Witness Morris** | | |
| 7 | | | |
| 8 | | | |
| 9 | | | |
| 10 | | **Debits** | **Credits** |
| 99 | Regulatory Assets - WCC Transaction Costs | - | - |
| 100 | Regulatory Liabilities - Energy Efficiency | 16,032 | (364,175) |
| 101 | Regulatory Liabilities - FAC | - | - |
| 102 | Regulatory Assets - PCB Refinancing Hedge | 18,697 | (823) |
| 103 | Prepaid Expenses: Production | - | (287,153) |
| 104 | Prepaid Expenses: Transmission | 229,895 | - |
| 105 | Prepaid Expenses: Transmission (incremental FERC Rates) | - | - |
| 106 | Prepaid Expenses: Distribution | - | (16,288) |
| 107 | Prepaid Expenses: Renewables | - | - |
| 108 | Regulatory Assets - 2024 Rate Change | 21,395 | (942) |
| 109 | Regulatory Assets - 2025 Rate Change | 8,933 | (393) |
| 110 | Regulatory Assets - SJGS Obsolete Inventory | 5,575 | (245) |
| 111 | Regulatory Liabilities - Earnings Test | - | - |
| 112 | Regulatory Assets - PVNGS Lease costs | - | - |
| 113 | Regulatory Assets - PVNGS Undepreciated Investment | 96,493 | (4,248) |
| 114 | Regulatory Assets - ETC Over/Under SPE | - | - |
| 115 | Regulatory Assets - PVNGS Replacement Resources | 2,295 | (101) |
| 116 | Regulatory Assets - Rate Rider 12 UG Rate | 47,599 | (2,095) |
| 117 | Regulatory Assets - Renewable Rider Curr Reg | - | - |
| 118 | Regulatory Assets - SJ Energy Transition Property (SPE) | 157,046 | (6,914) |
| 119 | Regulatory Liabilities - Curr Reg Liab-UG Rate Rider 12 | - | - |
| 120 | Regulatory Liabilities - ITC Sandia | - | - |
| 121 | Regulatory Liabilities - ITC Sunbelt | - | - |
| 122 | Regulatory Liabilities - ITC - Distribution Battery Phase 2 | - | - |
| 123 | Regulatory Liabilities - Energy Transition Cost True Up | 51 | (1,165) |
| 124 | Regulatory Liabilities - SJGS Retirements Rate Credit | 1 | (22) |
| 125 | Regulatory Liabilities - PVNGS Lease Costs | 18,926 | (429,909) |
| 126 | Deferred Debits - WS-Transmission Revenue | - | - |
| 127 | Customer Advance | - | - |
| 128 | Deferred Credits - ETA | - | - |
| 129 | Other Liabilities - ETA Coal Mine Severance | - | - |
| 130 | Other Liabilities - ETA State Agency Payments | - | - |
| 131 | SJGS County Ordinance Decommission | - | - |
| 132 | | | |
| 133 | **Total Accumulated Deferred Income Taxes** | 25,757,926 | (26,999,925) |
| 134 | | | |
| 135 | General Ledger ADIT Balance | | |
| 136 | | | |
| 137 | Difference (Rounding) | | |

| | A | N | O |
|---|---|---|---|
| 1 | **Public Service Company of New Mexico** | | |
| 2 | **Schedule H-12** | | |
| 3 | **Accumulated Tax Deferrals** | | |
| 4 | **Base Period Ending 6/30/2026** | | |
| 5 | **Test Period Ending 9/30/2028** | | |
| 6 | **This schedule is sponsored by PNM Witness Morris** | | |
| 7 | | | |
| 8 | | | |
| 9 | | **31-Oct-25** | |
| 10 | | **Balance** | **Debits** |
| 11 | **Accumulated Deferred Income Taxes** | | |
| 12 | Federal Tax Credit Carryforward | 20,731,066 | 249,052 |
| 13 | Federal Tax Credit Carryforward - Renewables | 69,083,272 | - |
| 14 | Net Operating Loss (NOL) | 16,112,206 | 16,143,435 |
| 15 | Incentive Pay Plans | 3,905,168 | 144,240 |
| 16 | Regulatory Assets - Coal Mine Decommissioning | - | - |
| 17 | Regulatory Liabilities - Renewable Rider | 2,594,441 | 10,643 |
| 18 | Income Tax Regulatory Liability | 56,383,297 | 2,176,747 |
| 19 | Income Tax Regulatory Asset | (65,609,183) | 37,179 |
| 20 | Investment Tax Credit 2024 | 7,393,757 | - |
| 21 | Investment Tax Credit - Sandia | - | - |
| 22 | Investment Tax Credit - Sunbelt | - | - |
| 23 | Investment Tax Credit - Distribution Battery Phase 2 | - | - |
| 24 | Lease Liability | 71,582,279 | - |
| 25 | Deferred Credits - Coal Mine Decommissioning | 19,723,282 | 10,527 |
| 26 | Regulatory Assets - ETA Carrying Charges | - | - |
| 27 | Regulatory Assets - ETA Job Training & Severance | - | - |
| 28 | Regulatory Assets - ETA Payments to State Agencies | - | - |
| 29 | Regulatory Assets - ETA SJGS Plant Decommissioning | - | - |
| 30 | Regulatory Assets - ETA SJGS upfront Financing Cost | - | - |
| 31 | Regulatory Assets - ETA Westmoreland Coal Mine Sev | - | - |
| 32 | Deferred Credits - Joint Use | 8,299 | - |
| 33 | Deferred Credits - Pathnet | 1,431,706 | - |
| 34 | Deferred Credits - PVNGS Dry Casks | 3,906,805 | 1,947 |
| 35 | Other Deferred Credits | 3,046,815 | 67,244 |
| 36 | Other Liabilities - ETA Job Training and Severance | 18,584 | 699 |
| 37 | Other Liabilities - Navajo Workforce Training | 25,400 | - |
| 38 | Other Liabilities | 1,659,412 | 96,175 |
| 39 | Blackstone Transaction Costs | 363,503 | 12,517 |
| 40 | Injury and Damages | 934,151 | 35,612 |
| 41 | Plant - AFUDC | (34,261,258) | 22,109 |
| 42 | Plant - Capitalized Interest | 12,382,294 | 1,709,477 |
| 43 | Decommissioning and Reclamation Trusts | (96,999,662) | 528,209 |
| 44 | ASC 740-10 (FIN 48) Reclassifications | 63,805 | - |
| 45 | Estimated Tax Rate Adjustment | 1,101,652 | 82,048 |
| 46 | PVNGS Licensing | 30,368 | - |
| 47 | Plant - 263A Adjustment | (65,058,495) | 1,562,750 |
| 48 | Deferred State Taxes | 3,946,510 | - |
| 49 | Plant - CIAC | 21,730,217 | 460,233 |
| 50 | Plant - Depreciation Nuclear Fuel | 7,159,172 | 657,147 |
| 51 | Plant - Removal Cost | (6,092,911) | 120,744 |
| 52 | Plant - Repairs | (97,697,052) | 507,081 |
| 53 | Plant - Section 174 Deduction | 6,613,039 | 1,781,633 |
| 54 | Plant - Asset Retirement Obligation | 91,347,011 | 6,444,972 |

| | A | N | O |
|---|---|---|---|
| 1 | **Public Service Company of New Mexico** | | |
| 2 | **Schedule H-12** | | |
| 3 | **Accumulated Tax Deferrals** | | |
| 4 | **Base Period Ending 6/30/2026** | | |
| 5 | **Test Period Ending 9/30/2028** | | |
| 6 | **This schedule is sponsored by PNM Witness Morris** | | |
| 7 | | | |
| 8 | | | |
| 9 | | **31-Oct-25** | |
| 10 | | **Balance** | **Debits** |
| 55 | Plant - Pollution Control Property | (2,154,701) | - |
| 56 | Plant - Liberalized Depreciation: Production | (117,771,794) | 3,149,821 |
| 57 | Plant - Liberalized Depreciation: Transmission | (158,481,591) | 483,176 |
| 58 | Plant - Liberalized Depreciation: Distribution | (144,099,291) | - |
| 59 | Plant - Liberalized Depreciation: General and Intangible | (10,158,391) | 57,644 |
| 60 | Plant - Liberalized Depreciation: Grid Mod | (1,897,964) | - |
| 61 | Plant - Liberalized Depreciation: Renewables | (48,669,654) | - |
| 62 | Plant - Four Corners Imprudence | - | - |
| 63 | Regulatory Assets - SJGS Stranded Costs Units 2&3 | (19,530,933) | 138,982 |
| 64 | Pension | (62,340,579) | 29,784 |
| 65 | Retiree Medical | (9,850,392) | 3,171 |
| 66 | Lease Asset | (72,386,872) | - |
| 67 | Loss on Reacquired Debt | (1,058,236) | 8,660 |
| 68 | Other Comprehensive Income (OCI) | 25,411,219 | - |
| 69 | Deferred Credits - SO2 Allowance | - | 0 |
| 70 | Deferred Debits - Rate Case Expense | (580,164) | - |
| 71 | Deferred Debits - Decoupling | - | - |
| 72 | Deferred Debits - Grid Modernization | (924,749) | 6,268 |
| 73 | Deferred Debits - RR Underground Rider | - | - |
| 74 | Energy Storage Agreement | 473,677 | 161,956 |
| 75 | Energy Transition Charges | 983,432 | 8,046 |
| 76 | Prepaid Expenses | (711,283) | 714,728 |
| 77 | Regulatory Assets - 2024 COVID Bad Debt | - | - |
| 78 | Regulatory Assets - COVID-19 Costs | (577,705) | 23,928 |
| 79 | Regulatory Assets - Community Solar | (481,116) | 1,068 |
| 80 | Regulatory assets - FAC | (4,157,439) | 1,755,929 |
| 81 | Regulatory Assets - EDAM Costs | - | 1,216 |
| 82 | Regulatory Assets - EIM Costs | (3,062,607) | 83,212 |
| 83 | Regulatory Assets - Energy Efficiency | 121,276 | 67,032 |
| 84 | Regulatory Assets - ETA | - | - |
| 85 | Regulatory Assets - FERC 893 Cyber | - | - |
| 86 | Regulatory Assets - IRP | - | - |
| 87 | Regulatory Assets - Sky Blue Under Recovery | - | - |
| 88 | Regulatory Assets - Renewable Energy | (59,519) | 9,805 |
| 89 | Regulatory Assets - Renewable Energy Credits | - | - |
| 90 | Regulatory Assets - SJGS External Legal Fees | (116,682) | 438 |
| 91 | Regulatory Assets - SJGS Final ETA Depcom | (300,984) | 737 |
| 92 | Regulatory Assets - SJGS Final ETA Mine Rec | (6,569,452) | 2,144 |
| 93 | Regulatory Assets - SJGS Replacement Resources | (1,961,507) | 7,367 |
| 94 | Regulatory Assets - SJGS Undepreciated Investment | - | - |
| 95 | Regulatory Assets - SJGS Underground Coal Mine | - | - |
| 96 | Regulatory Assets - Solar Direct Regulatory Assets | 25,942 | 736 |
| 97 | Regulatory Assets - TOD Rate Pilot Program | (340,582) | - |
| 98 | Regulatory Assets - Transportation Electrification | (2,039,964) | 10,742 |

| | A | N | O |
|---|---|---|---|
| 1 | **Public Service Company of New Mexico** | | |
| 2 | **Schedule H-12** | | |
| 3 | **Accumulated Tax Deferrals** | | |
| 4 | **Base Period Ending 6/30/2026** | | |
| 5 | **Test Period Ending 9/30/2028** | | |
| 6 | **This schedule is sponsored by PNM Witness Morris** | | |
| 7 | | | |
| 8 | | | |
| 9 | | **31-Oct-25** | |
| 10 | | **Balance** | **Debits** |
| 99 | Regulatory Assets - WCC Transaction Costs | - | - |
| 100 | Regulatory Liabilities - Energy Efficiency | 1,131,686 | 126,861 |
| 101 | Regulatory Liabilities - FAC | - | - |
| 102 | Regulatory Assets - PCB Refinancing Hedge | (1,857,001) | 18,697 |
| 103 | Prepaid Expenses: Production | (672,958) | 86,342 |
| 104 | Prepaid Expenses: Transmission | (2,398,443) | 425,033 |
| 105 | Prepaid Expenses: Transmission (incremental FERC Rates) | - | - |
| 106 | Prepaid Expenses: Distribution | (150,422) | - |
| 107 | Prepaid Expenses: Renewables | - | - |
| 108 | Regulatory Assets - 2024 Rate Change | (787,442) | 21,395 |
| 109 | Regulatory Assets - 2025 Rate Change | (478,252) | 8,933 |
| 110 | Regulatory Assets - SJGS Obsolete Inventory | (1,484,273) | 5,575 |
| 111 | Regulatory Liabilities - Earnings Test | - | - |
| 112 | Regulatory Assets - PVNGS Lease costs | - | - |
| 113 | Regulatory Assets - PVNGS Undepreciated Investment | (20,155,281) | 96,493 |
| 114 | Regulatory Assets - ETC Over/Under SPE | - | - |
| 115 | Regulatory Assets - PVNGS Replacement Resources | (479,351) | 2,295 |
| 116 | Regulatory Assets - Rate Rider 12 UG Rate | (489,370) | 47,832 |
| 117 | Regulatory Assets - Renewable Rider Curr Reg | - | - |
| 118 | Regulatory Assets - SJ Energy Transition Property (SPE) | (83,901,218) | 157,046 |
| 119 | Regulatory Liabilities - Curr Reg Liab-UG Rate Rider 12 | - | - |
| 120 | Regulatory Liabilities - ITC Sandia | - | - |
| 121 | Regulatory Liabilities - ITC Sunbelt | - | - |
| 122 | Regulatory Liabilities - ITC - Distribution Battery Phase 2 | - | - |
| 123 | Regulatory Liabilities - Energy Transition Cost True Up | 305,171 | 51 |
| 124 | Regulatory Liabilities - SJGS Retirements Rate Credit | 19,771 | 84 |
| 125 | Regulatory Liabilities - PVNGS Lease Costs | 1,580,607 | 18,002 |
| 126 | Deferred Debits - WS-Transmission Revenue | (8,132,577) | - |
| 127 | Customer Advance | - | - |
| 128 | Deferred Credits - ETA | - | - |
| 129 | Other Liabilities - ETA Coal Mine Severance | - | - |
| 130 | Other Liabilities - ETA State Agency Payments | - | - |
| 131 | SJGS County Ordinance Decommission | - | - |
| 132 | | | |
| 133 | **Total Accumulated Deferred Income Taxes** | (703,659,009) | 40,603,648 |
| 134 | | | |
| 135 | General Ledger ADIT Balance | (703,659,009) | |
| 136 | | | |
| 137 | Difference (Rounding) | 0 | |

| | A | P | Q |
|---|---|---|---|
| 1 | **Public Service Company of New Mexico** | | |
| 2 | **Schedule H-12** | | |
| 3 | **Accumulated Tax Deferrals** | | |
| 4 | **Base Period Ending 6/30/2026** | | |
| 5 | **Test Period Ending 9/30/2028** | | |
| 6 | **This schedule is sponsored by PNM Witness Morris** | | |
| 7 | | | |
| 8 | | | |
| 9 | | | **30-Nov-25** |
| 10 | | **Credits** | **Balance** |
| 11 | **Accumulated Deferred Income Taxes** | | |
| 12 | Federal Tax Credit Carryforward | - | 20,980,118 |
| 13 | Federal Tax Credit Carryforward - Renewables | - | 69,083,272 |
| 14 | Net Operating Loss (NOL) | (6,378,915) | 25,876,726 |
| 15 | Incentive Pay Plans | (6,350) | 4,043,058 |
| 16 | Regulatory Assets - Coal Mine Decommissioning | - | - |
| 17 | Regulatory Liabilities - Renewable Rider | (241,768) | 2,363,316 |
| 18 | Income Tax Regulatory Liability | (2,778,126) | 55,781,918 |
| 19 | Income Tax Regulatory Asset | (3,567) | (65,575,571) |
| 20 | Investment Tax Credit 2024 | - | 7,393,757 |
| 21 | Investment Tax Credit - Sandia | - | - |
| 22 | Investment Tax Credit - Sunbelt | - | - |
| 23 | Investment Tax Credit - Distribution Battery Phase 2 | - | - |
| 24 | Lease Liability | - | 71,582,279 |
| 25 | Deferred Credits - Coal Mine Decommissioning | (239,130) | 19,494,679 |
| 26 | Regulatory Assets - ETA Carrying Charges | - | - |
| 27 | Regulatory Assets - ETA Job Training & Severance | - | - |
| 28 | Regulatory Assets - ETA Payments to State Agencies | - | - |
| 29 | Regulatory Assets - ETA SJGS Plant Decommissioning | - | - |
| 30 | Regulatory Assets - ETA SJGS upfront Financing Cost | - | - |
| 31 | Regulatory Assets - ETA Westmoreland Coal Mine Sev | - | - |
| 32 | Deferred Credits - Joint Use | - | 8,299 |
| 33 | Deferred Credits - Pathnet | - | 1,431,706 |
| 34 | Deferred Credits - PVNGS Dry Casks | (44,221) | 3,864,531 |
| 35 | Other Deferred Credits | (3,549) | 3,110,510 |
| 36 | Other Liabilities - ETA Job Training and Severance | (31) | 19,252 |
| 37 | Other Liabilities - Navajo Workforce Training | - | 25,400 |
| 38 | Other Liabilities | (75,263) | 1,680,324 |
| 39 | Blackstone Transaction Costs | (551) | 375,469 |
| 40 | Injury and Damages | (14,953) | 954,809 |
| 41 | Plant - AFUDC | (502,214) | (34,741,363) |
| 42 | Plant - Capitalized Interest | (84,230) | 14,007,541 |
| 43 | Decommissioning and Reclamation Trusts | (1,223,655) | (97,695,108) |
| 44 | ASC 740-10 (FIN 48) Reclassifications | - | 63,805 |
| 45 | Estimated Tax Rate Adjustment | (2,090,238) | (906,538) |
| 46 | PVNGS Licensing | - | 30,368 |
| 47 | Plant - 263A Adjustment | (9,860,434) | (73,356,179) |
| 48 | Deferred State Taxes | - | 3,946,510 |
| 49 | Plant - CIAC | (247,241) | 21,943,209 |
| 50 | Plant - Depreciation Nuclear Fuel | (915,695) | 6,900,624 |
| 51 | Plant - Removal Cost | (5,316) | (5,977,483) |
| 52 | Plant - Repairs | (11,518,452) | (108,708,424) |
| 53 | Plant - Section 174 Deduction | (1,295,548) | 7,099,124 |
| 54 | Plant - Asset Retirement Obligation | (336,164) | 97,455,819 |

| | A | P | Q |
|---|---|---|---|
| 1 | **Public Service Company of New Mexico** | | |
| 2 | **Schedule H-12** | | |
| 3 | **Accumulated Tax Deferrals** | | |
| 4 | **Base Period Ending 6/30/2026** | | |
| 5 | **Test Period Ending 9/30/2028** | | |
| 6 | **This schedule is sponsored by PNM Witness Morris** | | |
| 7 | | | |
| 8 | | | |
| 9 | | | **30-Nov-25** |
| 10 | | **Credits** | **Balance** |
| 55 | Plant - Pollution Control Property | - | (2,154,701) |
| 56 | Plant - Liberalized Depreciation: Production | (2,578,400) | (117,200,373) |
| 57 | Plant - Liberalized Depreciation: Transmission | - | (157,998,415) |
| 58 | Plant - Liberalized Depreciation: Distribution | (811,329) | (144,910,619) |
| 59 | Plant - Liberalized Depreciation: General and Intangible | - | (10,100,748) |
| 60 | Plant - Liberalized Depreciation: Grid Mod | (10,686) | (1,908,651) |
| 61 | Plant - Liberalized Depreciation: Renewables | (103,069) | (48,772,722) |
| 62 | Plant - Four Corners Imprudence | - | - |
| 63 | Regulatory Assets - SJGS Stranded Costs Units 2&3 | (6,118) | (19,398,070) |
| 64 | Pension | (10,967) | (62,321,761) |
| 65 | Retiree Medical | (72,031) | (9,919,252) |
| 66 | Lease Asset | - | (72,386,872) |
| 67 | Loss on Reacquired Debt | (381) | (1,049,957) |
| 68 | Other Comprehensive Income (OCI) | (116,300) | 25,294,919 |
| 69 | Deferred Credits - SO2 Allowance | (0) | 0 |
| 70 | Deferred Debits - Rate Case Expense | - | (580,164) |
| 71 | Deferred Debits - Decoupling | - | - |
| 72 | Deferred Debits - Grid Modernization | (142,373) | (1,060,854) |
| 73 | Deferred Debits - RR Underground Rider | - | - |
| 74 | Energy Storage Agreement | (7,130) | 628,504 |
| 75 | Energy Transition Charges | (182,757) | 808,720 |
| 76 | Prepaid Expenses | (576,428) | (572,984) |
| 77 | Regulatory Assets - 2024 COVID Bad Debt | - | - |
| 78 | Regulatory Assets - COVID-19 Costs | (1,053) | (554,831) |
| 79 | Regulatory Assets - Community Solar | (24,265) | (504,312) |
| 80 | Regulatory assets - FAC | (147,132) | (2,548,642) |
| 81 | Regulatory Assets - EDAM Costs | (27,619) | (26,403) |
| 82 | Regulatory Assets - EIM Costs | (3,663) | (2,983,059) |
| 83 | Regulatory Assets - Energy Efficiency | (2,951) | 185,357 |
| 84 | Regulatory Assets - ETA | - | - |
| 85 | Regulatory Assets - FERC 893 Cyber | - | - |
| 86 | Regulatory Assets - IRP | - | - |
| 87 | Regulatory Assets - Sky Blue Under Recovery | - | - |
| 88 | Regulatory Assets - Renewable Energy | (432) | (50,145) |
| 89 | Regulatory Assets - Renewable Energy Credits | - | - |
| 90 | Regulatory Assets - SJGS External Legal Fees | (19) | (116,263) |
| 91 | Regulatory Assets - SJGS Final ETA Depcom | (16,746) | (316,993) |
| 92 | Regulatory Assets - SJGS Final ETA Mine Rec | (48,703) | (6,616,011) |
| 93 | Regulatory Assets - SJGS Replacement Resources | (324) | (1,954,464) |
| 94 | Regulatory Assets - SJGS Undepreciated Investment | - | - |
| 95 | Regulatory Assets - SJGS Underground Coal Mine | - | - |
| 96 | Regulatory Assets - Solar Direct Regulatory Assets | (32) | 26,646 |
| 97 | Regulatory Assets - TOD Rate Pilot Program | - | (340,582) |
| 98 | Regulatory Assets - Transportation Electrification | (244,013) | (2,273,234) |

| | A | P | Q |
|---|---|---|---|
| 1 | **Public Service Company of New Mexico** | | |
| 2 | **Schedule H-12** | | |
| 3 | **Accumulated Tax Deferrals** | | |
| 4 | **Base Period Ending 6/30/2026** | | |
| 5 | **Test Period Ending 9/30/2028** | | |
| 6 | **This schedule is sponsored by PNM Witness Morris** | | |
| 7 | | | |
| 8 | | | |
| 9 | | | **30-Nov-25** |
| 10 | | **Credits** | **Balance** |
| 99 | Regulatory Assets - WCC Transaction Costs | - | - |
| 100 | Regulatory Liabilities - Energy Efficiency | (5,585) | 1,252,962 |
| 101 | Regulatory Liabilities - FAC | - | - |
| 102 | Regulatory Assets - PCB Refinancing Hedge | (823) | (1,839,126) |
| 103 | Prepaid Expenses: Production | - | (586,616) |
| 104 | Prepaid Expenses: Transmission | - | (1,973,410) |
| 105 | Prepaid Expenses: Transmission (incremental FERC Rates) | - | - |
| 106 | Prepaid Expenses: Distribution | (15,449) | (165,871) |
| 107 | Prepaid Expenses: Renewables | - | - |
| 108 | Regulatory Assets - 2024 Rate Change | (942) | (766,989) |
| 109 | Regulatory Assets - 2025 Rate Change | (393) | (469,712) |
| 110 | Regulatory Assets - SJGS Obsolete Inventory | (245) | (1,478,944) |
| 111 | Regulatory Liabilities - Earnings Test | - | - |
| 112 | Regulatory Assets - PVNGS Lease costs | - | - |
| 113 | Regulatory Assets - PVNGS Undepreciated Investment | (4,248) | (20,063,036) |
| 114 | Regulatory Assets - ETC Over/Under SPE | - | - |
| 115 | Regulatory Assets - PVNGS Replacement Resources | (101) | (477,157) |
| 116 | Regulatory Assets - Rate Rider 12 UG Rate | (2,106) | (443,644) |
| 117 | Regulatory Assets - Renewable Rider Curr Reg | - | - |
| 118 | Regulatory Assets - SJ Energy Transition Property (SPE) | (6,914) | (83,751,086) |
| 119 | Regulatory Liabilities - Curr Reg Liab-UG Rate Rider 12 | - | - |
| 120 | Regulatory Liabilities - ITC Sandia | - | - |
| 121 | Regulatory Liabilities - ITC Sunbelt | - | - |
| 122 | Regulatory Liabilities - ITC - Distribution Battery Phase 2 | - | - |
| 123 | Regulatory Liabilities - Energy Transition Cost True Up | (1,165) | 304,057 |
| 124 | Regulatory Liabilities - SJGS Retirements Rate Credit | (4) | 19,851 |
| 125 | Regulatory Liabilities - PVNGS Lease Costs | (408,927) | 1,189,681 |
| 126 | Deferred Debits - WS-Transmission Revenue | - | (8,132,577) |
| 127 | Customer Advance | - | - |
| 128 | Deferred Credits - ETA | - | - |
| 129 | Other Liabilities - ETA Coal Mine Severance | - | - |
| 130 | Other Liabilities - ETA State Agency Payments | - | - |
| 131 | SJGS County Ordinance Decommission | - | - |
| 132 | | | |
| 133 | **Total Accumulated Deferred Income Taxes** | (43,447,433) | (706,502,794) |
| 134 | | | |
| 135 | General Ledger ADIT Balance | | (706,502,794) |
| 136 | | | |
| 137 | Difference (Rounding) | | 0 |

| | A | R | S |
|---|---|---|---|
| 1 | **Public Service Company of New Mexico** | | |
| 2 | **Schedule H-12** | | |
| 3 | **Accumulated Tax Deferrals** | | |
| 4 | **Base Period Ending 6/30/2026** | | |
| 5 | **Test Period Ending 9/30/2028** | | |
| 6 | **This schedule is sponsored by PNM Witness Morris** | | |
| 7 | | | |
| 8 | | | |
| 9 | | | |
| 10 | | **Debits** | **Credits** |
| 11 | **Accumulated Deferred Income Taxes** | | |
| 12 | Federal Tax Credit Carryforward | 651,664 | (387,454) |
| 13 | Federal Tax Credit Carryforward - Renewables | - | 193,727 |
| 14 | Net Operating Loss (NOL) | 89,502,307 | (79,141,223) |
| 15 | Incentive Pay Plans | 134,136 | (1,404,655) |
| 16 | Regulatory Assets - Coal Mine Decommissioning | - | - |
| 17 | Regulatory Liabilities - Renewable Rider | 195,418 | (551,416) |
| 18 | Income Tax Regulatory Liability | 2,254,447 | (3,486,920) |
| 19 | Income Tax Regulatory Asset | 100,480 | (208,058) |
| 20 | Investment Tax Credit 2024 | - | - |
| 21 | Investment Tax Credit - Sandia | - | - |
| 22 | Investment Tax Credit - Sunbelt | - | - |
| 23 | Investment Tax Credit - Distribution Battery Phase 2 | - | - |
| 24 | Lease Liability | 14,508,468 | (2,165,676) |
| 25 | Deferred Credits - Coal Mine Decommissioning | 9,676 | (219,799) |
| 26 | Regulatory Assets - ETA Carrying Charges | - | - |
| 27 | Regulatory Assets - ETA Job Training & Severance | - | - |
| 28 | Regulatory Assets - ETA Payments to State Agencies | - | - |
| 29 | Regulatory Assets - ETA SJGS Plant Decommissioning | - | - |
| 30 | Regulatory Assets - ETA SJGS upfront Financing Cost | - | - |
| 31 | Regulatory Assets - ETA Westmoreland Coal Mine Sev | - | - |
| 32 | Deferred Credits - Joint Use | 2,972 | (131) |
| 33 | Deferred Credits - Pathnet | 1,071 | (24,333) |
| 34 | Deferred Credits - PVNGS Dry Casks | 63,426 | (2,792) |
| 35 | Other Deferred Credits | 5,272 | (97,409) |
| 36 | Other Liabilities - ETA Job Training and Severance | - | - |
| 37 | Other Liabilities - Navajo Workforce Training | - | - |
| 38 | Other Liabilities | 104,275 | (329,544) |
| 39 | Blackstone Transaction Costs | 32,923 | (1,449) |
| 40 | Injury and Damages | 94,577 | (90,671) |
| 41 | Plant - AFUDC | 1,023,612 | (1,642,051) |
| 42 | Plant - Capitalized Interest | 1,716,469 | (243,059) |
| 43 | Decommissioning and Reclamation Trusts | 1,299,247 | (399,722) |
| 44 | ASC 740-10 (FIN 48) Reclassifications | - | (976) |
| 45 | Estimated Tax Rate Adjustment | 11,867,494 | (10,960,955) |
| 46 | PVNGS Licensing | 622 | (14,118) |
| 47 | Plant - 263A Adjustment | 3,242,221 | (2,365,535) |
| 48 | Deferred State Taxes | - | (674,132) |
| 49 | Plant - CIAC | 1,529,655 | (67,341) |
| 50 | Plant - Depreciation Nuclear Fuel | 1,999,349 | (749,036) |
| 51 | Plant - Removal Cost | 1,565,114 | (910,547) |
| 52 | Plant - Repairs | 1,242,383 | (28,221,014) |
| 53 | Plant - Section 174 Deduction | 892,815 | (1,605,651) |
| 54 | Plant - Asset Retirement Obligation | 8,094,176 | (525,296) |

| | A | R | S |
|---|---|---|---|
| 1 | **Public Service Company of New Mexico** | | |
| 2 | **Schedule H-12** | | |
| 3 | **Accumulated Tax Deferrals** | | |
| 4 | **Base Period Ending 6/30/2026** | | |
| 5 | **Test Period Ending 9/30/2028** | | |
| 6 | **This schedule is sponsored by PNM Witness Morris** | | |
| 7 | | | |
| 8 | | | |
| 9 | | | |
| 10 | | **Debits** | **Credits** |
| 55 | Plant - Pollution Control Property | - | - |
| 56 | Plant - Liberalized Depreciation: Production | 16,462,905 | (15,952,297) |
| 57 | Plant - Liberalized Depreciation: Transmission | 3,034,982 | - |
| 58 | Plant - Liberalized Depreciation: Distribution | - | (5,602,611) |
| 59 | Plant - Liberalized Depreciation: General and Intangible | 1,556 | - |
| 60 | Plant - Liberalized Depreciation: Grid Mod | - | (73,793) |
| 61 | Plant - Liberalized Depreciation: Renewables | - | (2,022,972) |
| 62 | Plant - Four Corners Imprudence | - | - |
| 63 | Regulatory Assets - SJGS Stranded Costs Units 2&3 | 138,982 | (6,118) |
| 64 | Pension | 16,408,189 | (733,409) |
| 65 | Retiree Medical | 14,275 | (324,250) |
| 66 | Lease Asset | 2,246,397 | (14,495,337) |
| 67 | Loss on Reacquired Debt | 8,660 | (381) |
| 68 | Other Comprehensive Income (OCI) | 2,072,464 | (17,809,816) |
| 69 | Deferred Credits - SO2 Allowance | 0 | (0) |
| 70 | Deferred Debits - Rate Case Expense | 509,447 | (22,428) |
| 71 | Deferred Debits - Decoupling | - | - |
| 72 | Deferred Debits - Grid Modernization | 17,375 | (394,678) |
| 73 | Deferred Debits - RR Underground Rider | - | - |
| 74 | Energy Storage Agreement | 218,108 | (451,326) |
| 75 | Energy Transition Charges | 2,046 | (46,470) |
| 76 | Prepaid Expenses | 631,947 | (1,033,912) |
| 77 | Regulatory Assets - 2024 COVID Bad Debt | - | - |
| 78 | Regulatory Assets - COVID-19 Costs | 23,928 | (1,053) |
| 79 | Regulatory Assets - Community Solar | 1,269 | (28,828) |
| 80 | Regulatory assets - FAC | 2,856,417 | (825,627) |
| 81 | Regulatory Assets - EDAM Costs | 2,940 | (66,779) |
| 82 | Regulatory Assets - EIM Costs | 83,212 | (3,663) |
| 83 | Regulatory Assets - Energy Efficiency | 8,536 | (193,893) |
| 84 | Regulatory Assets - ETA | - | - |
| 85 | Regulatory Assets - FERC 893 Cyber | - | - |
| 86 | Regulatory Assets - IRP | - | - |
| 87 | Regulatory Assets - Sky Blue Under Recovery | - | - |
| 88 | Regulatory Assets - Renewable Energy | 10,304 | (454) |
| 89 | Regulatory Assets - Renewable Energy Credits | - | - |
| 90 | Regulatory Assets - SJGS External Legal Fees | 438 | (19) |
| 91 | Regulatory Assets - SJGS Final ETA Depcom | 724 | (16,454) |
| 92 | Regulatory Assets - SJGS Final ETA Mine Rec | 934 | (21,222) |
| 93 | Regulatory Assets - SJGS Replacement Resources | 7,367 | (324) |
| 94 | Regulatory Assets - SJGS Undepreciated Investment | - | - |
| 95 | Regulatory Assets - SJGS Underground Coal Mine | - | - |
| 96 | Regulatory Assets - Solar Direct Regulatory Assets | 82 | (1,862) |
| 97 | Regulatory Assets - TOD Rate Pilot Program | 6,642 | (150,876) |
| 98 | Regulatory Assets - Transportation Electrification | 31,233 | (709,468) |

| | A | R | S |
|---|---|---|---|
| 1 | **Public Service Company of New Mexico** | | |
| 2 | **Schedule H-12** | | |
| 3 | **Accumulated Tax Deferrals** | | |
| 4 | **Base Period Ending 6/30/2026** | | |
| 5 | **Test Period Ending 9/30/2028** | | |
| 6 | **This schedule is sponsored by PNM Witness Morris** | | |
| 7 | | | |
| 8 | | | |
| 9 | | | |
| 10 | | **Debits** | **Credits** |
| 99 | Regulatory Assets - WCC Transaction Costs | - | - |
| 100 | Regulatory Liabilities - Energy Efficiency | 46,991 | (1,067,402) |
| 101 | Regulatory Liabilities - FAC | - | - |
| 102 | Regulatory Assets - PCB Refinancing Hedge | 18,697 | (823) |
| 103 | Prepaid Expenses: Production | 91,657 | - |
| 104 | Prepaid Expenses: Transmission | 427,351 | - |
| 105 | Prepaid Expenses: Transmission (incremental FERC Rates) | - | - |
| 106 | Prepaid Expenses: Distribution | 37,986 | - |
| 107 | Prepaid Expenses: Renewables | - | - |
| 108 | Regulatory Assets - 2024 Rate Change | 21,395 | (942) |
| 109 | Regulatory Assets - 2025 Rate Change | 8,933 | (393) |
| 110 | Regulatory Assets - SJGS Obsolete Inventory | 5,575 | (245) |
| 111 | Regulatory Liabilities - Earnings Test | - | - |
| 112 | Regulatory Assets - PVNGS Lease costs | - | - |
| 113 | Regulatory Assets - PVNGS Undepreciated Investment | 96,493 | (4,248) |
| 114 | Regulatory Assets - ETC Over/Under SPE | - | - |
| 115 | Regulatory Assets - PVNGS Replacement Resources | 2,295 | (101) |
| 116 | Regulatory Assets - Rate Rider 12 UG Rate | 47,764 | (2,103) |
| 117 | Regulatory Assets - Renewable Rider Curr Reg | - | - |
| 118 | Regulatory Assets - SJ Energy Transition Property (SPE) | 157,046 | (6,914) |
| 119 | Regulatory Liabilities - Curr Reg Liab-UG Rate Rider 12 | - | - |
| 120 | Regulatory Liabilities - ITC Sandia | - | - |
| 121 | Regulatory Liabilities - ITC Sunbelt | - | - |
| 122 | Regulatory Liabilities - ITC - Distribution Battery Phase 2 | - | - |
| 123 | Regulatory Liabilities - Energy Transition Cost True Up | 9,843 | (223,595) |
| 124 | Regulatory Liabilities - SJGS Retirements Rate Credit | 10 | (0) |
| 125 | Regulatory Liabilities - PVNGS Lease Costs | 18,209 | (413,614) |
| 126 | Deferred Debits - WS-Transmission Revenue | 113,319 | (2,574,066) |
| 127 | Customer Advance | - | - |
| 128 | Deferred Credits - ETA | - | - |
| 129 | Other Liabilities - ETA Coal Mine Severance | - | - |
| 130 | Other Liabilities - ETA State Agency Payments | - | - |
| 131 | SJGS County Ordinance Decommission | - | - |
| 132 | | | |
| 133 | **Total Accumulated Deferred Income Taxes** | 188,039,188 | (201,582,003) |
| 134 | | | |
| 135 | General Ledger ADIT Balance | | |
| 136 | | | |
| 137 | Difference (Rounding) | | |

| | A | T | U |
|---|---|---|---|
| 1 | **Public Service Company of New Mexico** | | |
| 2 | **Schedule H-12** | | |
| 3 | **Accumulated Tax Deferrals** | | |
| 4 | **Base Period Ending 6/30/2026** | | |
| 5 | **Test Period Ending 9/30/2028** | | |
| 6 | **This schedule is sponsored by PNM Witness Morris** | | |
| 7 | | | |
| 8 | | | |
| 9 | | **31-Dec-25** | |
| 10 | | **Balance** | **Debits** |
| 11 | **Accumulated Deferred Income Taxes** | | |
| 12 | Federal Tax Credit Carryforward | 21,244,328 | - |
| 13 | Federal Tax Credit Carryforward - Renewables | 69,276,999 | - |
| 14 | Net Operating Loss (NOL) | 36,237,810 | - |
| 15 | Incentive Pay Plans | 2,772,539 | - |
| 16 | Regulatory Assets - Coal Mine Decommissioning | - | - |
| 17 | Regulatory Liabilities - Renewable Rider | 2,007,317 | - |
| 18 | Income Tax Regulatory Liability | 54,549,446 | - |
| 19 | Income Tax Regulatory Asset | (65,683,148) | - |
| 20 | Investment Tax Credit 2024 | 7,393,757 | - |
| 21 | Investment Tax Credit - Sandia | - | - |
| 22 | Investment Tax Credit - Sunbelt | - | - |
| 23 | Investment Tax Credit - Distribution Battery Phase 2 | - | - |
| 24 | Lease Liability | 83,925,072 | - |
| 25 | Deferred Credits - Coal Mine Decommissioning | 19,284,557 | - |
| 26 | Regulatory Assets - ETA Carrying Charges | - | - |
| 27 | Regulatory Assets - ETA Job Training & Severance | - | - |
| 28 | Regulatory Assets - ETA Payments to State Agencies | - | - |
| 29 | Regulatory Assets - ETA SJGS Plant Decommissioning | - | - |
| 30 | Regulatory Assets - ETA SJGS upfront Financing Cost | - | - |
| 31 | Regulatory Assets - ETA Westmoreland Coal Mine Sev | - | - |
| 32 | Deferred Credits - Joint Use | 11,140 | - |
| 33 | Deferred Credits - Pathnet | 1,408,444 | - |
| 34 | Deferred Credits - PVNGS Dry Casks | 3,925,165 | - |
| 35 | Other Deferred Credits | 3,018,373 | - |
| 36 | Other Liabilities - ETA Job Training and Severance | 19,252 | - |
| 37 | Other Liabilities - Navajo Workforce Training | 25,400 | - |
| 38 | Other Liabilities | 1,455,054 | - |
| 39 | Blackstone Transaction Costs | 406,942 | - |
| 40 | Injury and Damages | 958,715 | - |
| 41 | Plant - AFUDC | (35,359,802) | - |
| 42 | Plant - Capitalized Interest | 15,480,950 | - |
| 43 | Decommissioning and Reclamation Trusts | (96,795,583) | - |
| 44 | ASC 740-10 (FIN 48) Reclassifications | 62,829 | - |
| 45 | Estimated Tax Rate Adjustment | - | - |
| 46 | PVNGS Licensing | 16,871 | - |
| 47 | Plant - 263A Adjustment | (72,479,493) | - |
| 48 | Deferred State Taxes | 3,272,378 | - |
| 49 | Plant - CIAC | 23,405,524 | - |
| 50 | Plant - Depreciation Nuclear Fuel | 8,150,938 | - |
| 51 | Plant - Removal Cost | (5,322,916) | - |
| 52 | Plant - Repairs | (135,687,055) | - |
| 53 | Plant - Section 174 Deduction | 6,386,287 | - |
| 54 | Plant - Asset Retirement Obligation | 105,024,699 | - |

| | A | T | U |
|---|---|---|---|
| 1 | **Public Service Company of New Mexico** | | |
| 2 | **Schedule H-12** | | |
| 3 | **Accumulated Tax Deferrals** | | |
| 4 | **Base Period Ending 6/30/2026** | | |
| 5 | **Test Period Ending 9/30/2028** | | |
| 6 | **This schedule is sponsored by PNM Witness Morris** | | |
| 7 | | | |
| 8 | | | |
| 9 | | **31-Dec-25** | |
| 10 | | **Balance** | **Debits** |
| 55 | Plant - Pollution Control Property | (2,154,701) | - |
| 56 | Plant - Liberalized Depreciation: Production | (116,689,765) | 1,907,247 |
| 57 | Plant - Liberalized Depreciation: Transmission | (154,963,433) | - |
| 58 | Plant - Liberalized Depreciation: Distribution | (150,513,230) | - |
| 59 | Plant - Liberalized Depreciation: General and Intangible | (10,099,192) | - |
| 60 | Plant - Liberalized Depreciation: Grid Mod | (1,982,444) | - |
| 61 | Plant - Liberalized Depreciation: Renewables | (50,795,694) | 1,907,247 |
| 62 | Plant - Four Corners Imprudence | - | - |
| 63 | Regulatory Assets - SJGS Stranded Costs Units 2&3 | (19,265,207) | - |
| 64 | Pension | (46,646,981) | - |
| 65 | Retiree Medical | (10,229,228) | - |
| 66 | Lease Asset | (84,635,812) | - |
| 67 | Loss on Reacquired Debt | (1,041,679) | - |
| 68 | Other Comprehensive Income (OCI) | 9,557,567 | - |
| 69 | Deferred Credits - SO2 Allowance | - | - |
| 70 | Deferred Debits - Rate Case Expense | (93,145) | - |
| 71 | Deferred Debits - Decoupling | - | - |
| 72 | Deferred Debits - Grid Modernization | (1,438,157) | - |
| 73 | Deferred Debits - RR Underground Rider | - | - |
| 74 | Energy Storage Agreement | 395,286 | - |
| 75 | Energy Transition Charges | 764,296 | - |
| 76 | Prepaid Expenses | (974,949) | - |
| 77 | Regulatory Assets - 2024 COVID Bad Debt | - | - |
| 78 | Regulatory Assets - COVID-19 Costs | (531,957) | - |
| 79 | Regulatory Assets - Community Solar | (531,871) | - |
| 80 | Regulatory assets - FAC | (517,852) | - |
| 81 | Regulatory Assets - EDAM Costs | (90,242) | - |
| 82 | Regulatory Assets - EIM Costs | (2,903,511) | - |
| 83 | Regulatory Assets - Energy Efficiency | - | - |
| 84 | Regulatory Assets - ETA | - | - |
| 85 | Regulatory Assets - FERC 893 Cyber | - | - |
| 86 | Regulatory Assets - IRP | - | - |
| 87 | Regulatory Assets - Sky Blue Under Recovery | - | - |
| 88 | Regulatory Assets - Renewable Energy | (40,294) | - |
| 89 | Regulatory Assets - Renewable Energy Credits | - | - |
| 90 | Regulatory Assets - SJGS External Legal Fees | (115,844) | - |
| 91 | Regulatory Assets - SJGS Final ETA Depcom | (332,722) | - |
| 92 | Regulatory Assets - SJGS Final ETA Mine Rec | (6,636,299) | - |
| 93 | Regulatory Assets - SJGS Replacement Resources | (1,947,420) | - |
| 94 | Regulatory Assets - SJGS Undepreciated Investment | - | - |
| 95 | Regulatory Assets - SJGS Underground Coal Mine | - | - |
| 96 | Regulatory Assets - Solar Direct Regulatory Assets | 24,865 | - |
| 97 | Regulatory Assets - TOD Rate Pilot Program | (484,816) | - |
| 98 | Regulatory Assets - Transportation Electrification | (2,951,469) | - |

| | A | T | U |
|---|---|---|---|
| 1 | **Public Service Company of New Mexico** | | |
| 2 | **Schedule H-12** | | |
| 3 | **Accumulated Tax Deferrals** | | |
| 4 | **Base Period Ending 6/30/2026** | | |
| 5 | **Test Period Ending 9/30/2028** | | |
| 6 | **This schedule is sponsored by PNM Witness Morris** | | |
| 7 | | | |
| 8 | | | |
| 9 | | **31-Dec-25** | |
| 10 | | **Balance** | **Debits** |
| 99 | Regulatory Assets - WCC Transaction Costs | - | - |
| 100 | Regulatory Liabilities - Energy Efficiency | 232,551 | - |
| 101 | Regulatory Liabilities - FAC | - | - |
| 102 | Regulatory Assets - PCB Refinancing Hedge | (1,821,252) | - |
| 103 | Prepaid Expenses: Production | (494,959) | - |
| 104 | Prepaid Expenses: Transmission | (1,546,059) | - |
| 105 | Prepaid Expenses: Transmission (incremental FERC Rates) | - | - |
| 106 | Prepaid Expenses: Distribution | (127,886) | - |
| 107 | Prepaid Expenses: Renewables | - | - |
| 108 | Regulatory Assets - 2024 Rate Change | (746,536) | - |
| 109 | Regulatory Assets - 2025 Rate Change | (461,171) | - |
| 110 | Regulatory Assets - SJGS Obsolete Inventory | (1,473,614) | - |
| 111 | Regulatory Liabilities - Earnings Test | - | - |
| 112 | Regulatory Assets - PVNGS Lease costs | - | - |
| 113 | Regulatory Assets - PVNGS Undepreciated Investment | (19,970,791) | - |
| 114 | Regulatory Assets - ETC Over/Under SPE | - | - |
| 115 | Regulatory Assets - PVNGS Replacement Resources | (474,963) | - |
| 116 | Regulatory Assets - Rate Rider 12 UG Rate | (397,983) | - |
| 117 | Regulatory Assets - Renewable Rider Curr Reg | - | - |
| 118 | Regulatory Assets - SJ Energy Transition Property (SPE) | (83,600,954) | - |
| 119 | Regulatory Liabilities - Curr Reg Liab-UG Rate Rider 12 | - | - |
| 120 | Regulatory Liabilities - ITC Sandia | - | - |
| 121 | Regulatory Liabilities - ITC Sunbelt | - | - |
| 122 | Regulatory Liabilities - ITC - Distribution Battery Phase 2 | - | - |
| 123 | Regulatory Liabilities - Energy Transition Cost True Up | 90,306 | - |
| 124 | Regulatory Liabilities - SJGS Retirements Rate Credit | 19,861 | - |
| 125 | Regulatory Liabilities - PVNGS Lease Costs | 794,276 | - |
| 126 | Deferred Debits - WS-Transmission Revenue | (10,593,325) | - |
| 127 | Customer Advance | - | - |
| 128 | Deferred Credits - ETA | - | - |
| 129 | Other Liabilities - ETA Coal Mine Severance | - | - |
| 130 | Other Liabilities - ETA State Agency Payments | - | - |
| 131 | SJGS County Ordinance Decommission | - | - |
| 132 | | | |
| 133 | **Total Accumulated Deferred Income Taxes** | (720,045,609) | 3,814,494 |
| 134 | | | |
| 135 | General Ledger ADIT Balance | (720,045,610) | |
| 136 | | | |
| 137 | Difference (Rounding) | 0 | |

| | A | V | W |
|---|---|---|---|
| 1 | **Public Service Company of New Mexico** | | |
| 2 | **Schedule H-12** | | |
| 3 | **Accumulated Tax Deferrals** | | |
| 4 | **Base Period Ending 6/30/2026** | | |
| 5 | **Test Period Ending 9/30/2028** | | |
| 6 | **This schedule is sponsored by PNM Witness Morris** | | |
| 7 | | | |
| 8 | | | |
| 9 | | | **31-Jan-26** |
| 10 | | **Credits** | **Balance** |
| 11 | **Accumulated Deferred Income Taxes** | | |
| 12 | Federal Tax Credit Carryforward | - | 21,244,328 |
| 13 | Federal Tax Credit Carryforward - Renewables | - | 69,276,999 |
| 14 | Net Operating Loss (NOL) | (671,083) | 35,566,727 |
| 15 | Incentive Pay Plans | - | 2,772,539 |
| 16 | Regulatory Assets - Coal Mine Decommissioning | - | - |
| 17 | Regulatory Liabilities - Renewable Rider | - | 2,007,317 |
| 18 | Income Tax Regulatory Liability | - | 54,549,446 |
| 19 | Income Tax Regulatory Asset | - | (65,683,148) |
| 20 | Investment Tax Credit 2024 | - | 7,393,757 |
| 21 | Investment Tax Credit - Sandia | - | - |
| 22 | Investment Tax Credit - Sunbelt | - | - |
| 23 | Investment Tax Credit - Distribution Battery Phase 2 | - | - |
| 24 | Lease Liability | - | 83,925,072 |
| 25 | Deferred Credits - Coal Mine Decommissioning | - | 19,284,557 |
| 26 | Regulatory Assets - ETA Carrying Charges | - | - |
| 27 | Regulatory Assets - ETA Job Training & Severance | - | - |
| 28 | Regulatory Assets - ETA Payments to State Agencies | - | - |
| 29 | Regulatory Assets - ETA SJGS Plant Decommissioning | - | - |
| 30 | Regulatory Assets - ETA SJGS upfront Financing Cost | - | - |
| 31 | Regulatory Assets - ETA Westmoreland Coal Mine Sev | - | - |
| 32 | Deferred Credits - Joint Use | - | 11,140 |
| 33 | Deferred Credits - Pathnet | - | 1,408,444 |
| 34 | Deferred Credits - PVNGS Dry Casks | - | 3,925,165 |
| 35 | Other Deferred Credits | - | 3,018,373 |
| 36 | Other Liabilities - ETA Job Training and Severance | - | 19,252 |
| 37 | Other Liabilities - Navajo Workforce Training | - | 25,400 |
| 38 | Other Liabilities | - | 1,455,054 |
| 39 | Blackstone Transaction Costs | - | 406,942 |
| 40 | Injury and Damages | - | 958,715 |
| 41 | Plant - AFUDC | - | (35,359,802) |
| 42 | Plant - Capitalized Interest | - | 15,480,950 |
| 43 | Decommissioning and Reclamation Trusts | - | (96,795,583) |
| 44 | ASC 740-10 (FIN 48) Reclassifications | - | 62,829 |
| 45 | Estimated Tax Rate Adjustment | - | - |
| 46 | PVNGS Licensing | - | 16,871 |
| 47 | Plant - 263A Adjustment | - | (72,479,493) |
| 48 | Deferred State Taxes | - | 3,272,378 |
| 49 | Plant - CIAC | - | 23,405,524 |
| 50 | Plant - Depreciation Nuclear Fuel | - | 8,150,938 |
| 51 | Plant - Removal Cost | - | (5,322,916) |
| 52 | Plant - Repairs | - | (135,687,055) |
| 53 | Plant - Section 174 Deduction | - | 6,386,287 |
| 54 | Plant - Asset Retirement Obligation | - | 105,024,699 |

| | A | V | W |
|---|---|---|---|
| 1 | **Public Service Company of New Mexico** | | |
| 2 | **Schedule H-12** | | |
| 3 | **Accumulated Tax Deferrals** | | |
| 4 | **Base Period Ending 6/30/2026** | | |
| 5 | **Test Period Ending 9/30/2028** | | |
| 6 | **This schedule is sponsored by PNM Witness Morris** | | |
| 7 | | | |
| 8 | | | |
| 9 | | | **31-Jan-26** |
| 10 | | **Credits** | **Balance** |
| 55 | Plant - Pollution Control Property | - | (2,154,701) |
| 56 | Plant - Liberalized Depreciation: Production | (1,998,345) | (116,780,863) |
| 57 | Plant - Liberalized Depreciation: Transmission | (347,673) | (155,311,106) |
| 58 | Plant - Liberalized Depreciation: Distribution | (1,444,769) | (151,958,000) |
| 59 | Plant - Liberalized Depreciation: General and Intangible | (4,678) | (10,103,869) |
| 60 | Plant - Liberalized Depreciation: Grid Mod | (19,029) | (2,001,473) |
| 61 | Plant - Liberalized Depreciation: Renewables | - | (48,888,447) |
| 62 | Plant - Four Corners Imprudence | - | - |
| 63 | Regulatory Assets - SJGS Stranded Costs Units 2&3 | - | (19,265,207) |
| 64 | Pension | - | (46,646,981) |
| 65 | Retiree Medical | - | (10,229,228) |
| 66 | Lease Asset | - | (84,635,812) |
| 67 | Loss on Reacquired Debt | - | (1,041,679) |
| 68 | Other Comprehensive Income (OCI) | (115,811) | 9,441,757 |
| 69 | Deferred Credits - SO2 Allowance | - | - |
| 70 | Deferred Debits - Rate Case Expense | - | (93,145) |
| 71 | Deferred Debits - Decoupling | - | - |
| 72 | Deferred Debits - Grid Modernization | - | (1,438,157) |
| 73 | Deferred Debits - RR Underground Rider | - | - |
| 74 | Energy Storage Agreement | - | 395,286 |
| 75 | Energy Transition Charges | - | 764,296 |
| 76 | Prepaid Expenses | - | (974,949) |
| 77 | Regulatory Assets - 2024 COVID Bad Debt | - | - |
| 78 | Regulatory Assets - COVID-19 Costs | - | (531,957) |
| 79 | Regulatory Assets - Community Solar | - | (531,871) |
| 80 | Regulatory assets - FAC | - | (517,852) |
| 81 | Regulatory Assets - EDAM Costs | - | (90,242) |
| 82 | Regulatory Assets - EIM Costs | - | (2,903,511) |
| 83 | Regulatory Assets - Energy Efficiency | - | - |
| 84 | Regulatory Assets - ETA | - | - |
| 85 | Regulatory Assets - FERC 893 Cyber | - | - |
| 86 | Regulatory Assets - IRP | - | - |
| 87 | Regulatory Assets - Sky Blue Under Recovery | - | - |
| 88 | Regulatory Assets - Renewable Energy | - | (40,294) |
| 89 | Regulatory Assets - Renewable Energy Credits | - | - |
| 90 | Regulatory Assets - SJGS External Legal Fees | - | (115,844) |
| 91 | Regulatory Assets - SJGS Final ETA Depcom | - | (332,722) |
| 92 | Regulatory Assets - SJGS Final ETA Mine Rec | - | (6,636,299) |
| 93 | Regulatory Assets - SJGS Replacement Resources | - | (1,947,420) |
| 94 | Regulatory Assets - SJGS Undepreciated Investment | - | - |
| 95 | Regulatory Assets - SJGS Underground Coal Mine | - | - |
| 96 | Regulatory Assets - Solar Direct Regulatory Assets | - | 24,865 |
| 97 | Regulatory Assets - TOD Rate Pilot Program | - | (484,816) |
| 98 | Regulatory Assets - Transportation Electrification | - | (2,951,469) |

| | A | V | W |
|---|---|---|---|
| 1 | **Public Service Company of New Mexico** | | |
| 2 | **Schedule H-12** | | |
| 3 | **Accumulated Tax Deferrals** | | |
| 4 | **Base Period Ending 6/30/2026** | | |
| 5 | **Test Period Ending 9/30/2028** | | |
| 6 | **This schedule is sponsored by PNM Witness Morris** | | |
| 7 | | | |
| 8 | | | |
| 9 | | | **31-Jan-26** |
| 10 | | **Credits** | **Balance** |
| 99 | Regulatory Assets - WCC Transaction Costs | - | - |
| 100 | Regulatory Liabilities - Energy Efficiency | - | 232,551 |
| 101 | Regulatory Liabilities - FAC | - | - |
| 102 | Regulatory Assets - PCB Refinancing Hedge | - | (1,821,252) |
| 103 | Prepaid Expenses: Production | - | (494,959) |
| 104 | Prepaid Expenses: Transmission | - | (1,546,059) |
| 105 | Prepaid Expenses: Transmission (incremental FERC Rates) | - | - |
| 106 | Prepaid Expenses: Distribution | - | (127,886) |
| 107 | Prepaid Expenses: Renewables | - | - |
| 108 | Regulatory Assets - 2024 Rate Change | - | (746,536) |
| 109 | Regulatory Assets - 2025 Rate Change | - | (461,171) |
| 110 | Regulatory Assets - SJGS Obsolete Inventory | - | (1,473,614) |
| 111 | Regulatory Liabilities - Earnings Test | - | - |
| 112 | Regulatory Assets - PVNGS Lease costs | - | - |
| 113 | Regulatory Assets - PVNGS Undepreciated Investment | - | (19,970,791) |
| 114 | Regulatory Assets - ETC Over/Under SPE | - | - |
| 115 | Regulatory Assets - PVNGS Replacement Resources | - | (474,963) |
| 116 | Regulatory Assets - Rate Rider 12 UG Rate | - | (397,983) |
| 117 | Regulatory Assets - Renewable Rider Curr Reg | - | - |
| 118 | Regulatory Assets - SJ Energy Transition Property (SPE) | - | (83,600,954) |
| 119 | Regulatory Liabilities - Curr Reg Liab-UG Rate Rider 12 | - | - |
| 120 | Regulatory Liabilities - ITC Sandia | - | - |
| 121 | Regulatory Liabilities - ITC Sunbelt | - | - |
| 122 | Regulatory Liabilities - ITC - Distribution Battery Phase 2 | - | - |
| 123 | Regulatory Liabilities - Energy Transition Cost True Up | - | 90,306 |
| 124 | Regulatory Liabilities - SJGS Retirements Rate Credit | - | 19,861 |
| 125 | Regulatory Liabilities - PVNGS Lease Costs | - | 794,276 |
| 126 | Deferred Debits - WS-Transmission Revenue | - | (10,593,325) |
| 127 | Customer Advance | - | - |
| 128 | Deferred Credits - ETA | - | - |
| 129 | Other Liabilities - ETA Coal Mine Severance | - | - |
| 130 | Other Liabilities - ETA State Agency Payments | - | - |
| 131 | SJGS County Ordinance Decommission | - | - |
| 132 | | | |
| 133 | **Total Accumulated Deferred Income Taxes** | (4,601,388) | (720,832,503) |
| 134 | | | |
| 135 | General Ledger ADIT Balance | | (720,832,503) |
| 136 | | | |
| 137 | Difference (Rounding) | | 0 |

| | A | X | Y |
|---|---|---|---|
| 1 | **Public Service Company of New Mexico** | | |
| 2 | **Schedule H-12** | | |
| 3 | **Accumulated Tax Deferrals** | | |
| 4 | **Base Period Ending 6/30/2026** | | |
| 5 | **Test Period Ending 9/30/2028** | | |
| 6 | **This schedule is sponsored by PNM Witness Morris** | | |
| 7 | | | |
| 8 | | | |
| 9 | | | |
| 10 | | **Debits** | **Credits** |
| 11 | **Accumulated Deferred Income Taxes** | | |
| 12 | Federal Tax Credit Carryforward | - | - |
| 13 | Federal Tax Credit Carryforward - Renewables | - | - |
| 14 | Net Operating Loss (NOL) | 714,387 | - |
| 15 | Incentive Pay Plans | - | - |
| 16 | Regulatory Assets - Coal Mine Decommissioning | - | - |
| 17 | Regulatory Liabilities - Renewable Rider | - | - |
| 18 | Income Tax Regulatory Liability | - | - |
| 19 | Income Tax Regulatory Asset | - | - |
| 20 | Investment Tax Credit 2024 | - | - |
| 21 | Investment Tax Credit - Sandia | - | - |
| 22 | Investment Tax Credit - Sunbelt | - | - |
| 23 | Investment Tax Credit - Distribution Battery Phase 2 | - | - |
| 24 | Lease Liability | - | - |
| 25 | Deferred Credits - Coal Mine Decommissioning | - | - |
| 26 | Regulatory Assets - ETA Carrying Charges | - | - |
| 27 | Regulatory Assets - ETA Job Training & Severance | - | - |
| 28 | Regulatory Assets - ETA Payments to State Agencies | - | - |
| 29 | Regulatory Assets - ETA SJGS Plant Decommissioning | - | - |
| 30 | Regulatory Assets - ETA SJGS upfront Financing Cost | - | - |
| 31 | Regulatory Assets - ETA Westmoreland Coal Mine Sev | - | - |
| 32 | Deferred Credits - Joint Use | - | - |
| 33 | Deferred Credits - Pathnet | - | - |
| 34 | Deferred Credits - PVNGS Dry Casks | - | - |
| 35 | Other Deferred Credits | - | - |
| 36 | Other Liabilities - ETA Job Training and Severance | - | - |
| 37 | Other Liabilities - Navajo Workforce Training | - | - |
| 38 | Other Liabilities | - | - |
| 39 | Blackstone Transaction Costs | - | - |
| 40 | Injury and Damages | - | - |
| 41 | Plant - AFUDC | - | - |
| 42 | Plant - Capitalized Interest | - | - |
| 43 | Decommissioning and Reclamation Trusts | - | - |
| 44 | ASC 740-10 (FIN 48) Reclassifications | - | - |
| 45 | Estimated Tax Rate Adjustment | - | - |
| 46 | PVNGS Licensing | - | - |
| 47 | Plant - 263A Adjustment | - | - |
| 48 | Deferred State Taxes | - | - |
| 49 | Plant - CIAC | - | - |
| 50 | Plant - Depreciation Nuclear Fuel | - | - |
| 51 | Plant - Removal Cost | - | - |
| 52 | Plant - Repairs | - | - |
| 53 | Plant - Section 174 Deduction | - | - |
| 54 | Plant - Asset Retirement Obligation | - | - |

| | A | X | Y |
|---|---|---|---|
| 1 | **Public Service Company of New Mexico** | | |
| 2 | **Schedule H-12** | | |
| 3 | **Accumulated Tax Deferrals** | | |
| 4 | **Base Period Ending 6/30/2026** | | |
| 5 | **Test Period Ending 9/30/2028** | | |
| 6 | **This schedule is sponsored by PNM Witness Morris** | | |
| 7 | | | |
| 8 | | | |
| 9 | | | |
| 10 | | **Debits** | **Credits** |
| 55 | Plant - Pollution Control Property | - | - |
| 56 | Plant - Liberalized Depreciation: Production | 745,438 | (971,315) |
| 57 | Plant - Liberalized Depreciation: Transmission | 745,438 | - |
| 58 | Plant - Liberalized Depreciation: Distribution | - | (126,454) |
| 59 | Plant - Liberalized Depreciation: General and Intangible | - | (295,627) |
| 60 | Plant - Liberalized Depreciation: Grid Mod | - | (1,666) |
| 61 | Plant - Liberalized Depreciation: Renewables | - | (95,815) |
| 62 | Plant - Four Corners Imprudence | - | - |
| 63 | Regulatory Assets - SJGS Stranded Costs Units 2&3 | - | - |
| 64 | Pension | - | - |
| 65 | Retiree Medical | - | - |
| 66 | Lease Asset | - | - |
| 67 | Loss on Reacquired Debt | - | - |
| 68 | Other Comprehensive Income (OCI) | - | (51,383) |
| 69 | Deferred Credits - SO2 Allowance | - | - |
| 70 | Deferred Debits - Rate Case Expense | - | - |
| 71 | Deferred Debits - Decoupling | - | - |
| 72 | Deferred Debits - Grid Modernization | - | - |
| 73 | Deferred Debits - RR Underground Rider | - | - |
| 74 | Energy Storage Agreement | - | - |
| 75 | Energy Transition Charges | - | - |
| 76 | Prepaid Expenses | - | - |
| 77 | Regulatory Assets - 2024 COVID Bad Debt | - | - |
| 78 | Regulatory Assets - COVID-19 Costs | - | - |
| 79 | Regulatory Assets - Community Solar | - | - |
| 80 | Regulatory assets - FAC | - | - |
| 81 | Regulatory Assets - EDAM Costs | - | - |
| 82 | Regulatory Assets - EIM Costs | - | - |
| 83 | Regulatory Assets - Energy Efficiency | - | - |
| 84 | Regulatory Assets - ETA | - | - |
| 85 | Regulatory Assets - FERC 893 Cyber | - | - |
| 86 | Regulatory Assets - IRP | - | - |
| 87 | Regulatory Assets - Sky Blue Under Recovery | - | - |
| 88 | Regulatory Assets - Renewable Energy | - | - |
| 89 | Regulatory Assets - Renewable Energy Credits | - | - |
| 90 | Regulatory Assets - SJGS External Legal Fees | - | - |
| 91 | Regulatory Assets - SJGS Final ETA Depcom | - | - |
| 92 | Regulatory Assets - SJGS Final ETA Mine Rec | - | - |
| 93 | Regulatory Assets - SJGS Replacement Resources | - | - |
| 94 | Regulatory Assets - SJGS Undepreciated Investment | - | - |
| 95 | Regulatory Assets - SJGS Underground Coal Mine | - | - |
| 96 | Regulatory Assets - Solar Direct Regulatory Assets | - | - |
| 97 | Regulatory Assets - TOD Rate Pilot Program | - | - |
| 98 | Regulatory Assets - Transportation Electrification | - | - |

| | A | X | Y |
|---|---|---|---|
| 1 | **Public Service Company of New Mexico** | | |
| 2 | **Schedule H-12** | | |
| 3 | **Accumulated Tax Deferrals** | | |
| 4 | **Base Period Ending 6/30/2026** | | |
| 5 | **Test Period Ending 9/30/2028** | | |
| 6 | **This schedule is sponsored by PNM Witness Morris** | | |
| 7 | | | |
| 8 | | | |
| 9 | | | |
| 10 | | **Debits** | **Credits** |
| 99 | Regulatory Assets - WCC Transaction Costs | - | - |
| 100 | Regulatory Liabilities - Energy Efficiency | - | - |
| 101 | Regulatory Liabilities - FAC | - | - |
| 102 | Regulatory Assets - PCB Refinancing Hedge | - | - |
| 103 | Prepaid Expenses: Production | - | - |
| 104 | Prepaid Expenses: Transmission | - | - |
| 105 | Prepaid Expenses: Transmission (incremental FERC Rates) | - | - |
| 106 | Prepaid Expenses: Distribution | - | - |
| 107 | Prepaid Expenses: Renewables | - | - |
| 108 | Regulatory Assets - 2024 Rate Change | - | - |
| 109 | Regulatory Assets - 2025 Rate Change | - | - |
| 110 | Regulatory Assets - SJGS Obsolete Inventory | - | - |
| 111 | Regulatory Liabilities - Earnings Test | - | - |
| 112 | Regulatory Assets - PVNGS Lease costs | - | - |
| 113 | Regulatory Assets - PVNGS Undepreciated Investment | - | - |
| 114 | Regulatory Assets - ETC Over/Under SPE | - | - |
| 115 | Regulatory Assets - PVNGS Replacement Resources | - | - |
| 116 | Regulatory Assets - Rate Rider 12 UG Rate | - | - |
| 117 | Regulatory Assets - Renewable Rider Curr Reg | - | - |
| 118 | Regulatory Assets - SJ Energy Transition Property (SPE) | - | - |
| 119 | Regulatory Liabilities - Curr Reg Liab-UG Rate Rider 12 | - | - |
| 120 | Regulatory Liabilities - ITC Sandia | - | - |
| 121 | Regulatory Liabilities - ITC Sunbelt | - | - |
| 122 | Regulatory Liabilities - ITC - Distribution Battery Phase 2 | - | - |
| 123 | Regulatory Liabilities - Energy Transition Cost True Up | - | - |
| 124 | Regulatory Liabilities - SJGS Retirements Rate Credit | - | - |
| 125 | Regulatory Liabilities - PVNGS Lease Costs | - | - |
| 126 | Deferred Debits - WS-Transmission Revenue | - | - |
| 127 | Customer Advance | - | - |
| 128 | Deferred Credits - ETA | - | - |
| 129 | Other Liabilities - ETA Coal Mine Severance | - | - |
| 130 | Other Liabilities - ETA State Agency Payments | - | - |
| 131 | SJGS County Ordinance Decommission | - | - |
| 132 | | | |
| 133 | **Total Accumulated Deferred Income Taxes** | 2,205,264 | (1,542,260) |
| 134 | | | |
| 135 | General Ledger ADIT Balance | | |
| 136 | | | |
| 137 | Difference (Rounding) | | |

| | A | Z | AA |
|---|---|---|---|
| 1 | **Public Service Company of New Mexico** | | |
| 2 | **Schedule H-12** | | |
| 3 | **Accumulated Tax Deferrals** | | |
| 4 | **Base Period Ending 6/30/2026** | | |
| 5 | **Test Period Ending 9/30/2028** | | |
| 6 | **This schedule is sponsored by PNM Witness Morris** | | |
| 7 | | | |
| 8 | | | |
| 9 | | **28-Feb-26** | |
| 10 | | **Balance** | **Debits** |
| 11 | **Accumulated Deferred Income Taxes** | | |
| 12 | Federal Tax Credit Carryforward | 21,244,328 | 249,069 |
| 13 | Federal Tax Credit Carryforward - Renewables | 69,276,999 | - |
| 14 | Net Operating Loss (NOL) | 36,281,114 | 11,296,789 |
| 15 | Incentive Pay Plans | 2,772,539 | 216,456 |
| 16 | Regulatory Assets - Coal Mine Decommissioning | - | - |
| 17 | Regulatory Liabilities - Renewable Rider | 2,007,317 | 15,739 |
| 18 | Income Tax Regulatory Liability | 54,549,446 | 6,022,045 |
| 19 | Income Tax Regulatory Asset | (65,683,148) | 80,155 |
| 20 | Investment Tax Credit 2024 | 7,393,757 | - |
| 21 | Investment Tax Credit - Sandia | - | - |
| 22 | Investment Tax Credit - Sunbelt | - | - |
| 23 | Investment Tax Credit - Distribution Battery Phase 2 | - | - |
| 24 | Lease Liability | 83,925,072 | 672,698 |
| 25 | Deferred Credits - Coal Mine Decommissioning | 19,284,557 | 36,281 |
| 26 | Regulatory Assets - ETA Carrying Charges | - | - |
| 27 | Regulatory Assets - ETA Job Training & Severance | - | - |
| 28 | Regulatory Assets - ETA Payments to State Agencies | - | - |
| 29 | Regulatory Assets - ETA SJGS Plant Decommissioning | - | - |
| 30 | Regulatory Assets - ETA SJGS upfront Financing Cost | - | - |
| 31 | Regulatory Assets - ETA Westmoreland Coal Mine Sev | - | - |
| 32 | Deferred Credits - Joint Use | 11,140 | - |
| 33 | Deferred Credits - Pathnet | 1,408,444 | - |
| 34 | Deferred Credits - PVNGS Dry Casks | 3,925,165 | 105,774 |
| 35 | Other Deferred Credits | 3,018,373 | 6,672 |
| 36 | Other Liabilities - ETA Job Training and Severance | 19,252 | - |
| 37 | Other Liabilities - Navajo Workforce Training | 25,400 | - |
| 38 | Other Liabilities | 1,455,054 | 52,028 |
| 39 | Blackstone Transaction Costs | 406,942 | 268,339 |
| 40 | Injury and Damages | 958,715 | 12,899 |
| 41 | Plant - AFUDC | (35,359,802) | 95,131 |
| 42 | Plant - Capitalized Interest | 15,480,950 | 1,156,240 |
| 43 | Decommissioning and Reclamation Trusts | (96,795,583) | 1,745,014 |
| 44 | ASC 740-10 (FIN 48) Reclassifications | 62,829 | - |
| 45 | Estimated Tax Rate Adjustment | - | 2,065,693 |
| 46 | PVNGS Licensing | 16,871 | - |
| 47 | Plant - 263A Adjustment | (72,479,493) | 174,967 |
| 48 | Deferred State Taxes | 3,272,378 | - |
| 49 | Plant - CIAC | 23,405,524 | 1,620,523 |
| 50 | Plant - Depreciation Nuclear Fuel | 8,150,938 | 1,019,283 |
| 51 | Plant - Removal Cost | (5,322,916) | 458,493 |
| 52 | Plant - Repairs | (135,687,055) | 434,724 |
| 53 | Plant - Section 174 Deduction | 6,386,287 | 594,304 |
| 54 | Plant - Asset Retirement Obligation | 105,024,699 | 1,896,613 |

| | A | Z | AA |
|---|---|---|---|
| 1 | **Public Service Company of New Mexico** | | |
| 2 | **Schedule H-12** | | |
| 3 | **Accumulated Tax Deferrals** | | |
| 4 | **Base Period Ending 6/30/2026** | | |
| 5 | **Test Period Ending 9/30/2028** | | |
| 6 | **This schedule is sponsored by PNM Witness Morris** | | |
| 7 | | | |
| 8 | | | |
| 9 | | **28-Feb-26** | |
| 10 | | **Balance** | **Debits** |
| 55 | Plant - Pollution Control Property | (2,154,701) | - |
| 56 | Plant - Liberalized Depreciation: Production | (117,006,740) | 2,503,791 |
| 57 | Plant - Liberalized Depreciation: Transmission | (154,565,667) | 149,918 |
| 58 | Plant - Liberalized Depreciation: Distribution | (152,084,454) | - |
| 59 | Plant - Liberalized Depreciation: General and Intangible | (10,399,497) | - |
| 60 | Plant - Liberalized Depreciation: Grid Mod | (2,003,139) | - |
| 61 | Plant - Liberalized Depreciation: Renewables | (48,984,262) | - |
| 62 | Plant - Four Corners Imprudence | - | - |
| 63 | Regulatory Assets - SJGS Stranded Costs Units 2&3 | (19,265,207) | 416,945 |
| 64 | Pension | (46,646,981) | 280,289 |
| 65 | Retiree Medical | (10,229,228) | 12,289 |
| 66 | Lease Asset | (84,635,812) | 15,280,481 |
| 67 | Loss on Reacquired Debt | (1,041,679) | 25,979 |
| 68 | Other Comprehensive Income (OCI) | 9,390,374 | - |
| 69 | Deferred Credits - SO2 Allowance | - | - |
| 70 | Deferred Debits - Rate Case Expense | (93,145) | - |
| 71 | Deferred Debits - Decoupling | - | - |
| 72 | Deferred Debits - Grid Modernization | (1,438,157) | 26,409 |
| 73 | Deferred Debits - RR Underground Rider | - | - |
| 74 | Energy Storage Agreement | 395,286 | 2,029,837 |
| 75 | Energy Transition Charges | 764,296 | 6,561 |
| 76 | Prepaid Expenses | (974,949) | 1,804,948 |
| 77 | Regulatory Assets - 2024 COVID Bad Debt | - | - |
| 78 | Regulatory Assets - COVID-19 Costs | (531,957) | 71,783 |
| 79 | Regulatory Assets - Community Solar | (531,871) | 14,391 |
| 80 | Regulatory assets - FAC | (517,852) | 2,539,637 |
| 81 | Regulatory Assets - EDAM Costs | (90,242) | 2,924 |
| 82 | Regulatory Assets - EIM Costs | (2,903,511) | 249,634 |
| 83 | Regulatory Assets - Energy Efficiency | - | 391,066 |
| 84 | Regulatory Assets - ETA | - | - |
| 85 | Regulatory Assets - FERC 893 Cyber | - | - |
| 86 | Regulatory Assets - IRP | - | - |
| 87 | Regulatory Assets - Sky Blue Under Recovery | - | - |
| 88 | Regulatory Assets - Renewable Energy | (40,294) | 2,156 |
| 89 | Regulatory Assets - Renewable Energy Credits | - | - |
| 90 | Regulatory Assets - SJGS External Legal Fees | (115,844) | 1,315 |
| 91 | Regulatory Assets - SJGS Final ETA Depcom | (332,722) | 13,758 |
| 92 | Regulatory Assets - SJGS Final ETA Mine Rec | (6,636,299) | 3,516 |
| 93 | Regulatory Assets - SJGS Replacement Resources | (1,947,420) | 22,102 |
| 94 | Regulatory Assets - SJGS Undepreciated Investment | - | - |
| 95 | Regulatory Assets - SJGS Underground Coal Mine | - | - |
| 96 | Regulatory Assets - Solar Direct Regulatory Assets | 24,865 | - |
| 97 | Regulatory Assets - TOD Rate Pilot Program | (484,816) | 5,144 |
| 98 | Regulatory Assets - Transportation Electrification | (2,951,469) | 318,607 |

| | A | Z | AA |
|---|---|---|---|
| 1 | **Public Service Company of New Mexico** | | |
| 2 | **Schedule H-12** | | |
| 3 | **Accumulated Tax Deferrals** | | |
| 4 | **Base Period Ending 6/30/2026** | | |
| 5 | **Test Period Ending 9/30/2028** | | |
| 6 | **This schedule is sponsored by PNM Witness Morris** | | |
| 7 | | | |
| 8 | | | |
| 9 | | **28-Feb-26** | |
| 10 | | **Balance** | **Debits** |
| 99 | Regulatory Assets - WCC Transaction Costs | - | - |
| 100 | Regulatory Liabilities - Energy Efficiency | 232,551 | 23,394 |
| 101 | Regulatory Liabilities - FAC | - | - |
| 102 | Regulatory Assets - PCB Refinancing Hedge | (1,821,252) | 56,092 |
| 103 | Prepaid Expenses: Production | (494,959) | 76,423 |
| 104 | Prepaid Expenses: Transmission | (1,546,059) | 1,214,958 |
| 105 | Prepaid Expenses: Transmission (incremental FERC Rates) | - | - |
| 106 | Prepaid Expenses: Distribution | (127,886) | 23,361 |
| 107 | Prepaid Expenses: Renewables | - | - |
| 108 | Regulatory Assets - 2024 Rate Change | (746,536) | 64,185 |
| 109 | Regulatory Assets - 2025 Rate Change | (461,171) | 26,801 |
| 110 | Regulatory Assets - SJGS Obsolete Inventory | (1,473,614) | 16,725 |
| 111 | Regulatory Liabilities - Earnings Test | - | - |
| 112 | Regulatory Assets - PVNGS Lease costs | - | - |
| 113 | Regulatory Assets - PVNGS Undepreciated Investment | (19,970,791) | 289,480 |
| 114 | Regulatory Assets - ETC Over/Under SPE | - | - |
| 115 | Regulatory Assets - PVNGS Replacement Resources | (474,963) | 6,885 |
| 116 | Regulatory Assets - Rate Rider 12 UG Rate | (397,983) | 143,739 |
| 117 | Regulatory Assets - Renewable Rider Curr Reg | - | 28,043 |
| 118 | Regulatory Assets - SJ Energy Transition Property (SPE) | (83,600,954) | 477,885 |
| 119 | Regulatory Liabilities - Curr Reg Liab-UG Rate Rider 12 | - | - |
| 120 | Regulatory Liabilities - ITC Sandia | - | - |
| 121 | Regulatory Liabilities - ITC Sunbelt | - | - |
| 122 | Regulatory Liabilities - ITC - Distribution Battery Phase 2 | - | - |
| 123 | Regulatory Liabilities - Energy Transition Cost True Up | 90,306 | 218,934 |
| 124 | Regulatory Liabilities - SJGS Retirements Rate Credit | 19,861 | 74 |
| 125 | Regulatory Liabilities - PVNGS Lease Costs | 794,276 | 37,345 |
| 126 | Deferred Debits - WS-Transmission Revenue | (10,593,325) | - |
| 127 | Customer Advance | - | - |
| 128 | Deferred Credits - ETA | - | - |
| 129 | Other Liabilities - ETA Coal Mine Severance | - | - |
| 130 | Other Liabilities - ETA State Agency Payments | - | - |
| 131 | SJGS County Ordinance Decommission | - | - |
| 132 | | | |
| 133 | **Total Accumulated Deferred Income Taxes** | (720,169,499) | 59,173,731 |
| 134 | | | |
| 135 | General Ledger ADIT Balance | (720,169,499) | |
| 136 | | | |
| 137 | Difference (Rounding) | 0 | |

| | A | AB | AC |
|---|---|---|---|
| 1 | **Public Service Company of New Mexico** | | |
| 2 | **Schedule H-12** | | |
| 3 | **Accumulated Tax Deferrals** | | |
| 4 | **Base Period Ending 6/30/2026** | | |
| 5 | **Test Period Ending 9/30/2028** | | |
| 6 | **This schedule is sponsored by PNM Witness Morris** | | |
| 7 | | | |
| 8 | | | |
| 9 | | | **31-Mar-26** |
| 10 | | **Credits** | **Balance** |
| 11 | **Accumulated Deferred Income Taxes** | | |
| 12 | Federal Tax Credit Carryforward | - | 21,493,397 |
| 13 | Federal Tax Credit Carryforward - Renewables | - | 69,276,999 |
| 14 | Net Operating Loss (NOL) | (1,978,373) | 45,599,530 |
| 15 | Incentive Pay Plans | (9,529) | 2,979,466 |
| 16 | Regulatory Assets - Coal Mine Decommissioning | - | - |
| 17 | Regulatory Liabilities - Renewable Rider | (357,523) | 1,665,534 |
| 18 | Income Tax Regulatory Liability | (7,752,759) | 52,818,731 |
| 19 | Income Tax Regulatory Asset | (3,529) | (65,606,522) |
| 20 | Investment Tax Credit 2024 | - | 7,393,757 |
| 21 | Investment Tax Credit - Sandia | - | - |
| 22 | Investment Tax Credit - Sunbelt | - | - |
| 23 | Investment Tax Credit - Distribution Battery Phase 2 | - | - |
| 24 | Lease Liability | (15,280,481) | 69,317,289 |
| 25 | Deferred Credits - Coal Mine Decommissioning | (824,128) | 18,496,710 |
| 26 | Regulatory Assets - ETA Carrying Charges | - | - |
| 27 | Regulatory Assets - ETA Job Training & Severance | - | - |
| 28 | Regulatory Assets - ETA Payments to State Agencies | - | - |
| 29 | Regulatory Assets - ETA SJGS Plant Decommissioning | - | - |
| 30 | Regulatory Assets - ETA SJGS upfront Financing Cost | - | - |
| 31 | Regulatory Assets - ETA Westmoreland Coal Mine Sev | - | - |
| 32 | Deferred Credits - Joint Use | - | 11,140 |
| 33 | Deferred Credits - Pathnet | - | 1,408,444 |
| 34 | Deferred Credits - PVNGS Dry Casks | (4,657) | 4,026,283 |
| 35 | Other Deferred Credits | (84,537) | 2,940,508 |
| 36 | Other Liabilities - ETA Job Training and Severance | - | 19,252 |
| 37 | Other Liabilities - Navajo Workforce Training | - | 25,400 |
| 38 | Other Liabilities | (314,569) | 1,192,513 |
| 39 | Blackstone Transaction Costs | (11,813) | 663,468 |
| 40 | Injury and Damages | (3,442) | 968,173 |
| 41 | Plant - AFUDC | (2,160,916) | (37,425,588) |
| 42 | Plant - Capitalized Interest | (92,991) | 16,544,199 |
| 43 | Decommissioning and Reclamation Trusts | (259,972) | (95,310,541) |
| 44 | ASC 740-10 (FIN 48) Reclassifications | - | 62,829 |
| 45 | Estimated Tax Rate Adjustment | (11,431,561) | (9,365,868) |
| 46 | PVNGS Licensing | - | 16,871 |
| 47 | Plant - 263A Adjustment | (3,974,417) | (76,278,943) |
| 48 | Deferred State Taxes | - | 3,272,378 |
| 49 | Plant - CIAC | (71,341) | 24,954,705 |
| 50 | Plant - Depreciation Nuclear Fuel | (813,461) | 8,356,760 |
| 51 | Plant - Removal Cost | (20,184) | (4,884,607) |
| 52 | Plant - Repairs | (9,874,850) | (145,127,181) |
| 53 | Plant - Section 174 Deduction | (32,582) | 6,948,009 |
| 54 | Plant - Asset Retirement Obligation | (118,562) | 106,802,751 |

| | A | AB | AC |
|---|---|---|---|
| 1 | **Public Service Company of New Mexico** | | |
| 2 | **Schedule H-12** | | |
| 3 | **Accumulated Tax Deferrals** | | |
| 4 | **Base Period Ending 6/30/2026** | | |
| 5 | **Test Period Ending 9/30/2028** | | |
| 6 | **This schedule is sponsored by PNM Witness Morris** | | |
| 7 | | | |
| 8 | | | |
| 9 | | | **31-Mar-26** |
| 10 | | **Credits** | **Balance** |
| 55 | Plant - Pollution Control Property | - | (2,154,701) |
| 56 | Plant - Liberalized Depreciation: Production | (2,300,990) | (116,803,939) |
| 57 | Plant - Liberalized Depreciation: Transmission | - | (154,415,750) |
| 58 | Plant - Liberalized Depreciation: Distribution | (1,036,485) | (153,120,939) |
| 59 | Plant - Liberalized Depreciation: General and Intangible | (255,721) | (10,655,217) |
| 60 | Plant - Liberalized Depreciation: Grid Mod | (13,652) | (2,016,790) |
| 61 | Plant - Liberalized Depreciation: Renewables | (95,815) | (49,080,077) |
| 62 | Plant - Four Corners Imprudence | - | - |
| 63 | Regulatory Assets - SJGS Stranded Costs Units 2&3 | (18,355) | (18,866,616) |
| 64 | Pension | (41,658) | (46,408,351) |
| 65 | Retiree Medical | (279,149) | (10,496,088) |
| 66 | Lease Asset | (672,698) | (70,028,029) |
| 67 | Loss on Reacquired Debt | (1,144) | (1,016,844) |
| 68 | Other Comprehensive Income (OCI) | (12,211) | 9,378,163 |
| 69 | Deferred Credits - SO2 Allowance | - | - |
| 70 | Deferred Debits - Rate Case Expense | - | (93,145) |
| 71 | Deferred Debits - Decoupling | - | - |
| 72 | Deferred Debits - Grid Modernization | (599,894) | (2,011,641) |
| 73 | Deferred Debits - RR Underground Rider | - | - |
| 74 | Energy Storage Agreement | (89,360) | 2,335,762 |
| 75 | Energy Transition Charges | (149,028) | 621,828 |
| 76 | Prepaid Expenses | (1,446,209) | (616,211) |
| 77 | Regulatory Assets - 2024 COVID Bad Debt | - | - |
| 78 | Regulatory Assets - COVID-19 Costs | (3,160) | (463,334) |
| 79 | Regulatory Assets - Community Solar | (168,074) | (685,554) |
| 80 | Regulatory assets - FAC | (384,382) | 1,637,403 |
| 81 | Regulatory Assets - EDAM Costs | (66,412) | (153,730) |
| 82 | Regulatory Assets - EIM Costs | (10,990) | (2,664,866) |
| 83 | Regulatory Assets - Energy Efficiency | (151,950) | 239,116 |
| 84 | Regulatory Assets - ETA | - | - |
| 85 | Regulatory Assets - FERC 893 Cyber | - | - |
| 86 | Regulatory Assets - IRP | - | - |
| 87 | Regulatory Assets - Sky Blue Under Recovery | - | - |
| 88 | Regulatory Assets - Renewable Energy | (95) | (38,233) |
| 89 | Regulatory Assets - Renewable Energy Credits | - | - |
| 90 | Regulatory Assets - SJGS External Legal Fees | (58) | (114,587) |
| 91 | Regulatory Assets - SJGS Final ETA Depcom | (312,519) | (631,483) |
| 92 | Regulatory Assets - SJGS Final ETA Mine Rec | (79,869) | (6,712,651) |
| 93 | Regulatory Assets - SJGS Replacement Resources | (973) | (1,926,291) |
| 94 | Regulatory Assets - SJGS Undepreciated Investment | - | - |
| 95 | Regulatory Assets - SJGS Underground Coal Mine | - | - |
| 96 | Regulatory Assets - Solar Direct Regulatory Assets | - | 24,865 |
| 97 | Regulatory Assets - TOD Rate Pilot Program | (116,839) | (596,512) |
| 98 | Regulatory Assets - Transportation Electrification | (14,026) | (2,646,888) |

| | A | AB | AC |
|---|---|---|---|
| 1 | **Public Service Company of New Mexico** | | |
| 2 | **Schedule H-12** | | |
| 3 | **Accumulated Tax Deferrals** | | |
| 4 | **Base Period Ending 6/30/2026** | | |
| 5 | **Test Period Ending 9/30/2028** | | |
| 6 | **This schedule is sponsored by PNM Witness Morris** | | |
| 7 | | | |
| 8 | | | |
| 9 | | | **31-Mar-26** |
| 10 | | **Credits** | **Balance** |
| 99 | Regulatory Assets - WCC Transaction Costs | - | - |
| 100 | Regulatory Liabilities - Energy Efficiency | (1,030) | 254,915 |
| 101 | Regulatory Liabilities - FAC | - | - |
| 102 | Regulatory Assets - PCB Refinancing Hedge | (2,469) | (1,767,629) |
| 103 | Prepaid Expenses: Production | - | (418,536) |
| 104 | Prepaid Expenses: Transmission | - | (331,102) |
| 105 | Prepaid Expenses: Transmission (incremental FERC Rates) | - | - |
| 106 | Prepaid Expenses: Distribution | - | (104,524) |
| 107 | Prepaid Expenses: Renewables | - | - |
| 108 | Regulatory Assets - 2024 Rate Change | (2,826) | (685,177) |
| 109 | Regulatory Assets - 2025 Rate Change | (1,180) | (435,551) |
| 110 | Regulatory Assets - SJGS Obsolete Inventory | (736) | (1,457,626) |
| 111 | Regulatory Liabilities - Earnings Test | - | - |
| 112 | Regulatory Assets - PVNGS Lease costs | - | - |
| 113 | Regulatory Assets - PVNGS Undepreciated Investment | (12,744) | (19,694,055) |
| 114 | Regulatory Assets - ETC Over/Under SPE | - | - |
| 115 | Regulatory Assets - PVNGS Replacement Resources | (303) | (468,381) |
| 116 | Regulatory Assets - Rate Rider 12 UG Rate | (6,328) | (260,572) |
| 117 | Regulatory Assets - Renewable Rider Curr Reg | (637,008) | (608,965) |
| 118 | Regulatory Assets - SJ Energy Transition Property (SPE) | (21,038) | (83,144,107) |
| 119 | Regulatory Liabilities - Curr Reg Liab-UG Rate Rider 12 | - | - |
| 120 | Regulatory Liabilities - ITC Sandia | - | - |
| 121 | Regulatory Liabilities - ITC Sunbelt | - | - |
| 122 | Regulatory Liabilities - ITC - Distribution Battery Phase 2 | - | - |
| 123 | Regulatory Liabilities - Energy Transition Cost True Up | (9,638) | 299,602 |
| 124 | Regulatory Liabilities - SJGS Retirements Rate Credit | (1,671) | 18,264 |
| 125 | Regulatory Liabilities - PVNGS Lease Costs | (848,298) | (16,677) |
| 126 | Deferred Debits - WS-Transmission Revenue | - | (10,593,325) |
| 127 | Customer Advance | - | - |
| 128 | Deferred Credits - ETA | - | - |
| 129 | Other Liabilities - ETA Coal Mine Severance | - | - |
| 130 | Other Liabilities - ETA State Agency Payments | - | - |
| 131 | SJGS County Ordinance Decommission | - | - |
| 132 | | | |
| 133 | **Total Accumulated Deferred Income Taxes** | (65,343,161) | (726,338,929) |
| 134 | | | |
| 135 | General Ledger ADIT Balance | | (726,338,929) |
| 136 | | | |
| 137 | Difference (Rounding) | | 0 |

| | A | AD | AE |
|---|---|---|---|
| 1 | **Public Service Company of New Mexico** | | |
| 2 | **Schedule H-12** | | |
| 3 | **Accumulated Tax Deferrals** | | |
| 4 | **Base Period Ending 6/30/2026** | | |
| 5 | **Test Period Ending 9/30/2028** | | |
| 6 | **This schedule is sponsored by PNM Witness Morris** | | |
| 7 | | | |
| 8 | | | |
| 9 | | | |
| 10 | | **Debits** | **Credits** |
| 11 | **Accumulated Deferred Income Taxes** | | |
| 12 | Federal Tax Credit Carryforward | 104,272 | - |
| 13 | Federal Tax Credit Carryforward - Renewables | - | - |
| 14 | Net Operating Loss (NOL) | 9,034,430 | (1,675,800) |
| 15 | Incentive Pay Plans | - | - |
| 16 | Regulatory Assets - Coal Mine Decommissioning | - | - |
| 17 | Regulatory Liabilities - Renewable Rider | 3,795 | (86,211) |
| 18 | Income Tax Regulatory Liability | 1,794,283 | (2,270,317) |
| 19 | Income Tax Regulatory Asset | 33,809 | (1,488) |
| 20 | Investment Tax Credit 2024 | - | - |
| 21 | Investment Tax Credit - Sandia | - | - |
| 22 | Investment Tax Credit - Sunbelt | - | - |
| 23 | Investment Tax Credit - Distribution Battery Phase 2 | - | - |
| 24 | Lease Liability | 81,533 | (1,852,038) |
| 25 | Deferred Credits - Coal Mine Decommissioning | 17,603 | (399,863) |
| 26 | Regulatory Assets - ETA Carrying Charges | - | - |
| 27 | Regulatory Assets - ETA Job Training & Severance | - | - |
| 28 | Regulatory Assets - ETA Payments to State Agencies | - | - |
| 29 | Regulatory Assets - ETA SJGS Plant Decommissioning | - | - |
| 30 | Regulatory Assets - ETA SJGS upfront Financing Cost | - | - |
| 31 | Regulatory Assets - ETA Westmoreland Coal Mine Sev | - | - |
| 32 | Deferred Credits - Joint Use | - | - |
| 33 | Deferred Credits - Pathnet | - | - |
| 34 | Deferred Credits - PVNGS Dry Casks | 44,175 | (1,945) |
| 35 | Other Deferred Credits | 62,102 | (130,650) |
| 36 | Other Liabilities - ETA Job Training and Severance | - | - |
| 37 | Other Liabilities - Navajo Workforce Training | - | - |
| 38 | Other Liabilities | 151,271 | (6,660) |
| 39 | Blackstone Transaction Costs | 87,370 | (3,846) |
| 40 | Injury and Damages | 43,081 | (3,239) |
| 41 | Plant - AFUDC | 21,930 | (498,134) |
| 42 | Plant - Capitalized Interest | 385,413 | (30,997) |
| 43 | Decommissioning and Reclamation Trusts | 581,671 | (86,657) |
| 44 | ASC 740-10 (FIN 48) Reclassifications | - | - |
| 45 | Estimated Tax Rate Adjustment | 342,067 | (3,631,620) |
| 46 | PVNGS Licensing | - | - |
| 47 | Plant - 263A Adjustment | 58,322 | (1,324,806) |
| 48 | Deferred State Taxes | - | - |
| 49 | Plant - CIAC | 540,174 | (23,780) |
| 50 | Plant - Depreciation Nuclear Fuel | 339,761 | (271,154) |
| 51 | Plant - Removal Cost | 152,831 | (6,728) |
| 52 | Plant - Repairs | 144,908 | (3,291,617) |
| 53 | Plant - Section 174 Deduction | 198,101 | (10,861) |
| 54 | Plant - Asset Retirement Obligation | 632,204 | (39,521) |

| | A | AD | AE |
|---|---|---|---|
| 1 | **Public Service Company of New Mexico** | | |
| 2 | **Schedule H-12** | | |
| 3 | **Accumulated Tax Deferrals** | | |
| 4 | **Base Period Ending 6/30/2026** | | |
| 5 | **Test Period Ending 9/30/2028** | | |
| 6 | **This schedule is sponsored by PNM Witness Morris** | | |
| 7 | | | |
| 8 | | | |
| 9 | | | |
| 10 | | **Debits** | **Credits** |
| 55 | Plant - Pollution Control Property | - | - |
| 56 | Plant - Liberalized Depreciation: Production | 1,838,194 | (1,515,301) |
| 57 | Plant - Liberalized Depreciation: Transmission | 452,315 | - |
| 58 | Plant - Liberalized Depreciation: Distribution | - | (1,105,157) |
| 59 | Plant - Liberalized Depreciation: General and Intangible | 90,669 | - |
| 60 | Plant - Liberalized Depreciation: Grid Mod | - | (14,556) |
| 61 | Plant - Liberalized Depreciation: Renewables | - | (95,815) |
| 62 | Plant - Four Corners Imprudence | - | - |
| 63 | Regulatory Assets - SJGS Stranded Costs Units 2&3 | 138,982 | (6,118) |
| 64 | Pension | 93,430 | (13,886) |
| 65 | Retiree Medical | 4,096 | (93,050) |
| 66 | Lease Asset | 669,908 | (29,492) |
| 67 | Loss on Reacquired Debt | 8,660 | (381) |
| 68 | Other Comprehensive Income (OCI) | - | (49,986) |
| 69 | Deferred Credits - SO2 Allowance | - | - |
| 70 | Deferred Debits - Rate Case Expense | - | - |
| 71 | Deferred Debits - Decoupling | - | - |
| 72 | Deferred Debits - Grid Modernization | 44,975 | (710,334) |
| 73 | Deferred Debits - RR Underground Rider | - | - |
| 74 | Energy Storage Agreement | 4,827 | (109,641) |
| 75 | Energy Transition Charges | 2,893 | (65,718) |
| 76 | Prepaid Expenses | 512,293 | (1,257,704) |
| 77 | Regulatory Assets - 2024 COVID Bad Debt | - | - |
| 78 | Regulatory Assets - COVID-19 Costs | 23,928 | (1,053) |
| 79 | Regulatory Assets - Community Solar | 3,501 | (79,534) |
| 80 | Regulatory assets - FAC | 141,690 | (1,495,355) |
| 81 | Regulatory Assets - EDAM Costs | 1,667 | (37,874) |
| 82 | Regulatory Assets - EIM Costs | 83,212 | (3,663) |
| 83 | Regulatory Assets - Energy Efficiency | 23,434 | (532,298) |
| 84 | Regulatory Assets - ETA | - | - |
| 85 | Regulatory Assets - FERC 893 Cyber | - | - |
| 86 | Regulatory Assets - IRP | - | - |
| 87 | Regulatory Assets - Sky Blue Under Recovery | - | - |
| 88 | Regulatory Assets - Renewable Energy | 187 | (4,255) |
| 89 | Regulatory Assets - Renewable Energy Credits | - | - |
| 90 | Regulatory Assets - SJGS External Legal Fees | 438 | (19) |
| 91 | Regulatory Assets - SJGS Final ETA Depcom | 333 | (7,562) |
| 92 | Regulatory Assets - SJGS Final ETA Mine Rec | 1,827 | (41,497) |
| 93 | Regulatory Assets - SJGS Replacement Resources | 7,367 | (324) |
| 94 | Regulatory Assets - SJGS Undepreciated Investment | - | - |
| 95 | Regulatory Assets - SJGS Underground Coal Mine | - | - |
| 96 | Regulatory Assets - Solar Direct Regulatory Assets | - | - |
| 97 | Regulatory Assets - TOD Rate Pilot Program | 1,786 | (40,578) |
| 98 | Regulatory Assets - Transportation Electrification | 522 | (11,858) |

| | A | AD | AE |
|---|---|---|---|
| 1 | **Public Service Company of New Mexico** | | |
| 2 | **Schedule H-12** | | |
| 3 | **Accumulated Tax Deferrals** | | |
| 4 | **Base Period Ending 6/30/2026** | | |
| 5 | **Test Period Ending 9/30/2028** | | |
| 6 | **This schedule is sponsored by PNM Witness Morris** | | |
| 7 | | | |
| 8 | | | |
| 9 | | | |
| 10 | | **Debits** | **Credits** |
| 99 | Regulatory Assets - WCC Transaction Costs | - | - |
| 100 | Regulatory Liabilities - Energy Efficiency | 385,123 | (16,954) |
| 101 | Regulatory Liabilities - FAC | 1,712,807 | (75,403) |
| 102 | Regulatory Assets - PCB Refinancing Hedge | 18,697 | (823) |
| 103 | Prepaid Expenses: Production | 82,071 | - |
| 104 | Prepaid Expenses: Transmission | 1,380 | - |
| 105 | Prepaid Expenses: Transmission (incremental FERC Rates) | - | - |
| 106 | Prepaid Expenses: Distribution | - | (12,908) |
| 107 | Prepaid Expenses: Renewables | - | - |
| 108 | Regulatory Assets - 2024 Rate Change | 21,395 | (942) |
| 109 | Regulatory Assets - 2025 Rate Change | 8,933 | (393) |
| 110 | Regulatory Assets - SJGS Obsolete Inventory | 5,575 | (245) |
| 111 | Regulatory Liabilities - Earnings Test | - | - |
| 112 | Regulatory Assets - PVNGS Lease costs | 482 | (10,957) |
| 113 | Regulatory Assets - PVNGS Undepreciated Investment | 96,493 | (4,248) |
| 114 | Regulatory Assets - ETC Over/Under SPE | - | - |
| 115 | Regulatory Assets - PVNGS Replacement Resources | 2,295 | (101) |
| 116 | Regulatory Assets - Rate Rider 12 UG Rate | 47,834 | (2,106) |
| 117 | Regulatory Assets - Renewable Rider Curr Reg | 21,018 | (477,423) |
| 118 | Regulatory Assets - SJ Energy Transition Property (SPE) | 161,544 | (7,112) |
| 119 | Regulatory Liabilities - Curr Reg Liab-UG Rate Rider 12 | - | - |
| 120 | Regulatory Liabilities - ITC Sandia | - | - |
| 121 | Regulatory Liabilities - ITC Sunbelt | - | - |
| 122 | Regulatory Liabilities - ITC - Distribution Battery Phase 2 | - | - |
| 123 | Regulatory Liabilities - Energy Transition Cost True Up | 51 | (1,165) |
| 124 | Regulatory Liabilities - SJGS Retirements Rate Credit | 3 | (0) |
| 125 | Regulatory Liabilities - PVNGS Lease Costs | 17,445 | (768) |
| 126 | Deferred Debits - WS-Transmission Revenue | - | - |
| 127 | Customer Advance | - | - |
| 128 | Deferred Credits - ETA | - | - |
| 129 | Other Liabilities - ETA Coal Mine Severance | - | - |
| 130 | Other Liabilities - ETA State Agency Payments | - | - |
| 131 | SJGS County Ordinance Decommission | - | - |
| 132 | | | |
| 133 | **Total Accumulated Deferred Income Taxes** | 21,589,386 | (23,582,490) |
| 134 | | | |
| 135 | General Ledger ADIT Balance | | |
| 136 | | | |
| 137 | Difference (Rounding) | | |

| | A | AF | AG |
|---|---|---|---|
| 1 | **Public Service Company of New Mexico** | | |
| 2 | **Schedule H-12** | | |
| 3 | **Accumulated Tax Deferrals** | | |
| 4 | **Base Period Ending 6/30/2026** | | |
| 5 | **Test Period Ending 9/30/2028** | | |
| 6 | **This schedule is sponsored by PNM Witness Morris** | | |
| 7 | | | |
| 8 | | | |
| 9 | | **30-Apr-26** | |
| 10 | | **Balance** | **Debits** |
| 11 | **Accumulated Deferred Income Taxes** | | |
| 12 | Federal Tax Credit Carryforward | 21,597,670 | 86,309 |
| 13 | Federal Tax Credit Carryforward - Renewables | 69,276,999 | - |
| 14 | Net Operating Loss (NOL) | 52,958,160 | 3,588,100 |
| 15 | Incentive Pay Plans | 2,979,466 | 58,797 |
| 16 | Regulatory Assets - Coal Mine Decommissioning | - | - |
| 17 | Regulatory Liabilities - Renewable Rider | 1,583,119 | 82,325 |
| 18 | Income Tax Regulatory Liability | 52,342,697 | 1,965,941 |
| 19 | Income Tax Regulatory Asset | (65,574,202) | 29,503 |
| 20 | Investment Tax Credit 2024 | 7,393,757 | - |
| 21 | Investment Tax Credit - Sandia | - | - |
| 22 | Investment Tax Credit - Sunbelt | - | - |
| 23 | Investment Tax Credit - Distribution Battery Phase 2 | - | - |
| 24 | Lease Liability | 67,546,784 | 28,624 |
| 25 | Deferred Credits - Coal Mine Decommissioning | 18,114,451 | 11,934 |
| 26 | Regulatory Assets - ETA Carrying Charges | - | - |
| 27 | Regulatory Assets - ETA Job Training & Severance | - | - |
| 28 | Regulatory Assets - ETA Payments to State Agencies | - | - |
| 29 | Regulatory Assets - ETA SJGS Plant Decommissioning | - | - |
| 30 | Regulatory Assets - ETA SJGS upfront Financing Cost | - | - |
| 31 | Regulatory Assets - ETA Westmoreland Coal Mine Sev | - | - |
| 32 | Deferred Credits - Joint Use | 11,140 | - |
| 33 | Deferred Credits - Pathnet | 1,408,444 | - |
| 34 | Deferred Credits - PVNGS Dry Casks | 4,068,513 | 32,516 |
| 35 | Other Deferred Credits | 2,871,959 | 62,118 |
| 36 | Other Liabilities - ETA Job Training and Severance | 19,252 | - |
| 37 | Other Liabilities - Navajo Workforce Training | 25,400 | - |
| 38 | Other Liabilities | 1,337,125 | 117,668 |
| 39 | Blackstone Transaction Costs | 746,991 | 56,582 |
| 40 | Injury and Damages | 1,008,015 | 35,629 |
| 41 | Plant - AFUDC | (37,901,793) | 30,751 |
| 42 | Plant - Capitalized Interest | 16,898,615 | 385,413 |
| 43 | Decommissioning and Reclamation Trusts | (94,815,527) | 581,671 |
| 44 | ASC 740-10 (FIN 48) Reclassifications | 62,829 | - |
| 45 | Estimated Tax Rate Adjustment | (12,655,422) | 162,563 |
| 46 | PVNGS Licensing | 16,871 | - |
| 47 | Plant - 263A Adjustment | (77,545,426) | 58,322 |
| 48 | Deferred State Taxes | 3,272,378 | - |
| 49 | Plant - CIAC | 25,471,099 | 540,174 |
| 50 | Plant - Depreciation Nuclear Fuel | 8,425,367 | 339,761 |
| 51 | Plant - Removal Cost | (4,738,504) | 152,831 |
| 52 | Plant - Repairs | (148,273,890) | 144,908 |
| 53 | Plant - Section 174 Deduction | 7,135,250 | 198,102 |
| 54 | Plant - Asset Retirement Obligation | 107,395,435 | 632,205 |

| | A | AF | AG |
|---|---|---|---|
| 1 | **Public Service Company of New Mexico** | | |
| 2 | **Schedule H-12** | | |
| 3 | **Accumulated Tax Deferrals** | | |
| 4 | **Base Period Ending 6/30/2026** | | |
| 5 | **Test Period Ending 9/30/2028** | | |
| 6 | **This schedule is sponsored by PNM Witness Morris** | | |
| 7 | | | |
| 8 | | | |
| 9 | | **30-Apr-26** | |
| 10 | | **Balance** | **Debits** |
| 55 | Plant - Pollution Control Property | (2,154,701) | - |
| 56 | Plant - Liberalized Depreciation: Production | (116,481,046) | 1,227,280 |
| 57 | Plant - Liberalized Depreciation: Transmission | (153,963,435) | 300,483 |
| 58 | Plant - Liberalized Depreciation: Distribution | (154,226,096) | - |
| 59 | Plant - Liberalized Depreciation: General and Intangible | (10,564,548) | 86,479 |
| 60 | Plant - Liberalized Depreciation: Grid Mod | (2,031,347) | - |
| 61 | Plant - Liberalized Depreciation: Renewables | (49,175,892) | - |
| 62 | Plant - Four Corners Imprudence | - | - |
| 63 | Regulatory Assets - SJGS Stranded Costs Units 2&3 | (18,733,753) | 138,982 |
| 64 | Pension | (46,328,807) | 93,430 |
| 65 | Retiree Medical | (10,585,041) | 4,096 |
| 66 | Lease Asset | (69,387,613) | 384,836 |
| 67 | Loss on Reacquired Debt | (1,008,565) | 8,660 |
| 68 | Other Comprehensive Income (OCI) | 9,328,177 | - |
| 69 | Deferred Credits - SO2 Allowance | - | - |
| 70 | Deferred Debits - Rate Case Expense | (93,145) | - |
| 71 | Deferred Debits - Decoupling | - | - |
| 72 | Deferred Debits - Grid Modernization | (2,677,000) | 131,224 |
| 73 | Deferred Debits - RR Underground Rider | - | - |
| 74 | Energy Storage Agreement | 2,230,948 | 4,354 |
| 75 | Energy Transition Charges | 559,003 | 1,781 |
| 76 | Prepaid Expenses | (1,361,622) | 566,506 |
| 77 | Regulatory Assets - 2024 COVID Bad Debt | - | - |
| 78 | Regulatory Assets - COVID-19 Costs | (440,460) | 23,928 |
| 79 | Regulatory Assets - Community Solar | (761,586) | 3,569 |
| 80 | Regulatory assets - FAC | 283,738 | 311,123 |
| 81 | Regulatory Assets - EDAM Costs | (189,936) | - |
| 82 | Regulatory Assets - EIM Costs | (2,585,318) | 83,211 |
| 83 | Regulatory Assets - Energy Efficiency | (269,749) | 112,799 |
| 84 | Regulatory Assets - ETA | - | - |
| 85 | Regulatory Assets - FERC 893 Cyber | - | - |
| 86 | Regulatory Assets - IRP | - | 1,958 |
| 87 | Regulatory Assets - Sky Blue Under Recovery | - | - |
| 88 | Regulatory Assets - Renewable Energy | (42,301) | 97 |
| 89 | Regulatory Assets - Renewable Energy Credits | - | 3,616 |
| 90 | Regulatory Assets - SJGS External Legal Fees | (114,168) | 438 |
| 91 | Regulatory Assets - SJGS Final ETA Depcom | (638,712) | 682 |
| 92 | Regulatory Assets - SJGS Final ETA Mine Rec | (6,752,321) | 1,858 |
| 93 | Regulatory Assets - SJGS Replacement Resources | (1,919,248) | 7,367 |
| 94 | Regulatory Assets - SJGS Undepreciated Investment | - | - |
| 95 | Regulatory Assets - SJGS Underground Coal Mine | - | - |
| 96 | Regulatory Assets - Solar Direct Regulatory Assets | 24,865 | - |
| 97 | Regulatory Assets - TOD Rate Pilot Program | (635,304) | 1,786 |
| 98 | Regulatory Assets - Transportation Electrification | (2,658,224) | 7,078 |

| | A | AF | AG |
|---|---|---|---|
| 1 | **Public Service Company of New Mexico** | | |
| 2 | **Schedule H-12** | | |
| 3 | **Accumulated Tax Deferrals** | | |
| 4 | **Base Period Ending 6/30/2026** | | |
| 5 | **Test Period Ending 9/30/2028** | | |
| 6 | **This schedule is sponsored by PNM Witness Morris** | | |
| 7 | | | |
| 8 | | | |
| 9 | | **30-Apr-26** | |
| 10 | | **Balance** | **Debits** |
| 99 | Regulatory Assets - WCC Transaction Costs | - | - |
| 100 | Regulatory Liabilities - Energy Efficiency | 623,083 | 6,479 |
| 101 | Regulatory Liabilities - FAC | 1,637,403 | 41,423 |
| 102 | Regulatory Assets - PCB Refinancing Hedge | (1,749,755) | 18,697 |
| 103 | Prepaid Expenses: Production | (336,464) | - |
| 104 | Prepaid Expenses: Transmission | (329,721) | 152,899 |
| 105 | Prepaid Expenses: Transmission (incremental FERC Rates) | - | - |
| 106 | Prepaid Expenses: Distribution | (117,433) | 2,764 |
| 107 | Prepaid Expenses: Renewables | - | - |
| 108 | Regulatory Assets - 2024 Rate Change | (664,724) | 21,395 |
| 109 | Regulatory Assets - 2025 Rate Change | (427,011) | 8,933 |
| 110 | Regulatory Assets - SJGS Obsolete Inventory | (1,452,296) | 5,575 |
| 111 | Regulatory Liabilities - Earnings Test | - | - |
| 112 | Regulatory Assets - PVNGS Lease costs | (10,475) | 3,283 |
| 113 | Regulatory Assets - PVNGS Undepreciated Investment | (19,601,810) | 96,493 |
| 114 | Regulatory Assets - ETC Over/Under SPE | - | - |
| 115 | Regulatory Assets - PVNGS Replacement Resources | (466,188) | 2,295 |
| 116 | Regulatory Assets - Rate Rider 12 UG Rate | (214,844) | 48,021 |
| 117 | Regulatory Assets - Renewable Rider Curr Reg | (1,065,371) | 23,531 |
| 118 | Regulatory Assets - SJ Energy Transition Property (SPE) | (82,989,674) | 161,544 |
| 119 | Regulatory Liabilities - Curr Reg Liab-UG Rate Rider 12 | - | - |
| 120 | Regulatory Liabilities - ITC Sandia | - | - |
| 121 | Regulatory Liabilities - ITC Sunbelt | - | - |
| 122 | Regulatory Liabilities - ITC - Distribution Battery Phase 2 | - | - |
| 123 | Regulatory Liabilities - Energy Transition Cost True Up | 298,488 | 51 |
| 124 | Regulatory Liabilities - SJGS Retirements Rate Credit | 18,266 | 7,384 |
| 125 | Regulatory Liabilities - PVNGS Lease Costs | (0) | - |
| 126 | Deferred Debits - WS-Transmission Revenue | (10,593,325) | - |
| 127 | Customer Advance | - | - |
| 128 | Deferred Credits - ETA | - | - |
| 129 | Other Liabilities - ETA Coal Mine Severance | - | - |
| 130 | Other Liabilities - ETA State Agency Payments | - | - |
| 131 | SJGS County Ordinance Decommission | - | - |
| 132 | | | |
| 133 | **Total Accumulated Deferred Income Taxes** | (728,332,032) | 13,491,137 |
| 134 | | | |
| 135 | General Ledger ADIT Balance | (728,332,033) | |
| 136 | | | |
| 137 | Difference (Rounding) | 0 | |

| | A | AH | AI |
|---|---|---|---|
| 1 | **Public Service Company of New Mexico** | | |
| 2 | **Schedule H-12** | | |
| 3 | **Accumulated Tax Deferrals** | | |
| 4 | **Base Period Ending 6/30/2026** | | |
| 5 | **Test Period Ending 9/30/2028** | | |
| 6 | **This schedule is sponsored by PNM Witness Morris** | | |
| 7 | | | |
| 8 | | | |
| 9 | | | **31-May-26** |
| 10 | | **Credits** | **Balance** |
| 11 | **Accumulated Deferred Income Taxes** | | |
| 12 | Federal Tax Credit Carryforward | - | 21,683,978 |
| 13 | Federal Tax Credit Carryforward - Renewables | - | 69,276,999 |
| 14 | Net Operating Loss (NOL) | (1,246,977) | 55,299,282 |
| 15 | Incentive Pay Plans | (2,588) | 3,035,675 |
| 16 | Regulatory Assets - Coal Mine Decommissioning | - | - |
| 17 | Regulatory Liabilities - Renewable Rider | (7,681) | 1,657,763 |
| 18 | Income Tax Regulatory Liability | (2,517,569) | 51,791,070 |
| 19 | Income Tax Regulatory Asset | (1,299) | (65,545,998) |
| 20 | Investment Tax Credit 2024 | - | 7,393,757 |
| 21 | Investment Tax Credit - Sandia | - | - |
| 22 | Investment Tax Credit - Sunbelt | - | - |
| 23 | Investment Tax Credit - Distribution Battery Phase 2 | - | - |
| 24 | Lease Liability | (242,001) | 67,333,406 |
| 25 | Deferred Credits - Coal Mine Decommissioning | (271,079) | 17,855,305 |
| 26 | Regulatory Assets - ETA Carrying Charges | - | - |
| 27 | Regulatory Assets - ETA Job Training & Severance | - | - |
| 28 | Regulatory Assets - ETA Payments to State Agencies | - | - |
| 29 | Regulatory Assets - ETA SJGS Plant Decommissioning | - | - |
| 30 | Regulatory Assets - ETA SJGS upfront Financing Cost | - | - |
| 31 | Regulatory Assets - ETA Westmoreland Coal Mine Sev | - | - |
| 32 | Deferred Credits - Joint Use | - | 11,140 |
| 33 | Deferred Credits - Pathnet | - | 1,408,444 |
| 34 | Deferred Credits - PVNGS Dry Casks | (1,431) | 4,099,598 |
| 35 | Other Deferred Credits | (131,012) | 2,803,065 |
| 36 | Other Liabilities - ETA Job Training and Severance | - | 19,252 |
| 37 | Other Liabilities - Navajo Workforce Training | - | 25,400 |
| 38 | Other Liabilities | (10,629) | 1,444,164 |
| 39 | Blackstone Transaction Costs | (2,491) | 801,082 |
| 40 | Injury and Damages | (1,620) | 1,042,024 |
| 41 | Plant - AFUDC | (698,525) | (38,569,567) |
| 42 | Plant - Capitalized Interest | (30,997) | 17,253,031 |
| 43 | Decommissioning and Reclamation Trusts | (86,657) | (94,320,513) |
| 44 | ASC 740-10 (FIN 48) Reclassifications | - | 62,829 |
| 45 | Estimated Tax Rate Adjustment | (1,878,452) | (14,371,311) |
| 46 | PVNGS Licensing | - | 16,871 |
| 47 | Plant - 263A Adjustment | (1,324,806) | (78,811,909) |
| 48 | Deferred State Taxes | - | 3,272,378 |
| 49 | Plant - CIAC | (23,780) | 25,987,493 |
| 50 | Plant - Depreciation Nuclear Fuel | (271,154) | 8,493,975 |
| 51 | Plant - Removal Cost | (6,728) | (4,592,402) |
| 52 | Plant - Repairs | (3,291,617) | (151,420,599) |
| 53 | Plant - Section 174 Deduction | (10,861) | 7,322,491 |
| 54 | Plant - Asset Retirement Obligation | (39,521) | 107,988,119 |

| | A | AH | AI |
|---|---|---|---|
| 1 | **Public Service Company of New Mexico** | | |
| 2 | **Schedule H-12** | | |
| 3 | **Accumulated Tax Deferrals** | | |
| 4 | **Base Period Ending 6/30/2026** | | |
| 5 | **Test Period Ending 9/30/2028** | | |
| 6 | **This schedule is sponsored by PNM Witness Morris** | | |
| 7 | | | |
| 8 | | | |
| 9 | | | **31-May-26** |
| 10 | | **Credits** | **Balance** |
| 55 | Plant - Pollution Control Property | - | (2,154,701) |
| 56 | Plant - Liberalized Depreciation: Production | (1,131,833) | (116,385,599) |
| 57 | Plant - Liberalized Depreciation: Transmission | - | (153,662,951) |
| 58 | Plant - Liberalized Depreciation: Distribution | (726,674) | (154,952,771) |
| 59 | Plant - Liberalized Depreciation: General and Intangible | - | (10,478,069) |
| 60 | Plant - Liberalized Depreciation: Grid Mod | (9,571) | (2,040,918) |
| 61 | Plant - Liberalized Depreciation: Renewables | (95,815) | (49,271,707) |
| 62 | Plant - Four Corners Imprudence | - | - |
| 63 | Regulatory Assets - SJGS Stranded Costs Units 2&3 | (6,118) | (18,600,890) |
| 64 | Pension | (13,886) | (46,249,263) |
| 65 | Retiree Medical | (93,050) | (10,673,994) |
| 66 | Lease Asset | (16,942) | (69,019,719) |
| 67 | Loss on Reacquired Debt | (381) | (1,000,287) |
| 68 | Other Comprehensive Income (OCI) | (49,986) | 9,278,190 |
| 69 | Deferred Credits - SO2 Allowance | - | - |
| 70 | Deferred Debits - Rate Case Expense | - | (93,145) |
| 71 | Deferred Debits - Decoupling | - | - |
| 72 | Deferred Debits - Grid Modernization | (231,183) | (2,776,960) |
| 73 | Deferred Debits - RR Underground Rider | - | - |
| 74 | Energy Storage Agreement | (98,896) | 2,136,405 |
| 75 | Energy Transition Charges | (40,459) | 520,326 |
| 76 | Prepaid Expenses | (397,074) | (1,192,190) |
| 77 | Regulatory Assets - 2024 COVID Bad Debt | - | - |
| 78 | Regulatory Assets - COVID-19 Costs | (1,053) | (417,586) |
| 79 | Regulatory Assets - Community Solar | (81,073) | (839,090) |
| 80 | Regulatory assets - FAC | (309,926) | 284,935 |
| 81 | Regulatory Assets - EDAM Costs | - | (189,936) |
| 82 | Regulatory Assets - EIM Costs | (3,663) | (2,505,770) |
| 83 | Regulatory Assets - Energy Efficiency | (93,302) | (250,251) |
| 84 | Regulatory Assets - ETA | - | - |
| 85 | Regulatory Assets - FERC 893 Cyber | - | - |
| 86 | Regulatory Assets - IRP | (44,467) | (42,510) |
| 87 | Regulatory Assets - Sky Blue Under Recovery | - | - |
| 88 | Regulatory Assets - Renewable Energy | (2,200) | (44,404) |
| 89 | Regulatory Assets - Renewable Energy Credits | (82,146) | (78,530) |
| 90 | Regulatory Assets - SJGS External Legal Fees | (19) | (113,749) |
| 91 | Regulatory Assets - SJGS Final ETA Depcom | (15,484) | (653,514) |
| 92 | Regulatory Assets - SJGS Final ETA Mine Rec | (42,196) | (6,792,660) |
| 93 | Regulatory Assets - SJGS Replacement Resources | (324) | (1,912,205) |
| 94 | Regulatory Assets - SJGS Undepreciated Investment | - | - |
| 95 | Regulatory Assets - SJGS Underground Coal Mine | - | - |
| 96 | Regulatory Assets - Solar Direct Regulatory Assets | - | 24,865 |
| 97 | Regulatory Assets - TOD Rate Pilot Program | (40,578) | (674,095) |
| 98 | Regulatory Assets - Transportation Electrification | (160,786) | (2,811,931) |

| | A | AH | AI |
|---|---|---|---|
| 1 | **Public Service Company of New Mexico** | | |
| 2 | **Schedule H-12** | | |
| 3 | **Accumulated Tax Deferrals** | | |
| 4 | **Base Period Ending 6/30/2026** | | |
| 5 | **Test Period Ending 9/30/2028** | | |
| 6 | **This schedule is sponsored by PNM Witness Morris** | | |
| 7 | | | |
| 8 | | | |
| 9 | | | **31-May-26** |
| 10 | | **Credits** | **Balance** |
| 99 | Regulatory Assets - WCC Transaction Costs | - | - |
| 100 | Regulatory Liabilities - Energy Efficiency | (147,175) | 482,387 |
| 101 | Regulatory Liabilities - FAC | (1,824) | 1,677,003 |
| 102 | Regulatory Assets - PCB Refinancing Hedge | (823) | (1,731,880) |
| 103 | Prepaid Expenses: Production | (33,393) | (369,858) |
| 104 | Prepaid Expenses: Transmission | - | (176,823) |
| 105 | Prepaid Expenses: Transmission (incremental FERC Rates) | - | - |
| 106 | Prepaid Expenses: Distribution | - | (114,669) |
| 107 | Prepaid Expenses: Renewables | - | - |
| 108 | Regulatory Assets - 2024 Rate Change | (942) | (644,271) |
| 109 | Regulatory Assets - 2025 Rate Change | (393) | (418,470) |
| 110 | Regulatory Assets - SJGS Obsolete Inventory | (245) | (1,446,966) |
| 111 | Regulatory Liabilities - Earnings Test | - | - |
| 112 | Regulatory Assets - PVNGS Lease costs | (145) | (7,337) |
| 113 | Regulatory Assets - PVNGS Undepreciated Investment | (4,248) | (19,509,565) |
| 114 | Regulatory Assets - ETC Over/Under SPE | - | - |
| 115 | Regulatory Assets - PVNGS Replacement Resources | (101) | (463,994) |
| 116 | Regulatory Assets - Rate Rider 12 UG Rate | (2,114) | (168,936) |
| 117 | Regulatory Assets - Renewable Rider Curr Reg | (534,516) | (1,576,355) |
| 118 | Regulatory Assets - SJ Energy Transition Property (SPE) | (7,112) | (82,835,242) |
| 119 | Regulatory Liabilities - Curr Reg Liab-UG Rate Rider 12 | - | - |
| 120 | Regulatory Liabilities - ITC Sandia | - | - |
| 121 | Regulatory Liabilities - ITC Sunbelt | - | - |
| 122 | Regulatory Liabilities - ITC - Distribution Battery Phase 2 | - | - |
| 123 | Regulatory Liabilities - Energy Transition Cost True Up | (1,165) | 297,375 |
| 124 | Regulatory Liabilities - SJGS Retirements Rate Credit | (325) | 25,325 |
| 125 | Regulatory Liabilities - PVNGS Lease Costs | - | (0) |
| 126 | Deferred Debits - WS-Transmission Revenue | - | (10,593,325) |
| 127 | Customer Advance | - | - |
| 128 | Deferred Credits - ETA | - | - |
| 129 | Other Liabilities - ETA Coal Mine Severance | - | - |
| 130 | Other Liabilities - ETA State Agency Payments | - | - |
| 131 | SJGS County Ordinance Decommission | - | - |
| 132 | | | |
| 133 | **Total Accumulated Deferred Income Taxes** | (16,623,083) | (731,463,979) |
| 134 | | | |
| 135 | General Ledger ADIT Balance | | (731,463,979) |
| 136 | | | |
| 137 | Difference (Rounding) | | 0 |

| | A | AJ | AK |
|---|---|---|---|
| 1 | **Public Service Company of New Mexico** | | |
| 2 | **Schedule H-12** | | |
| 3 | **Accumulated Tax Deferrals** | | |
| 4 | **Base Period Ending 6/30/2026** | | |
| 5 | **Test Period Ending 9/30/2028** | | |
| 6 | **This schedule is sponsored by PNM Witness Morris** | | |
| 7 | | | |
| 8 | | | |
| 9 | | | |
| 10 | | **Debits** | **Credits** |
| 11 | **Accumulated Deferred Income Taxes** | | |
| 12 | Federal Tax Credit Carryforward | 59,675 | - |
| 13 | Federal Tax Credit Carryforward - Renewables | - | - |
| 14 | Net Operating Loss (NOL) | 637,889 | (3,526,741) |
| 15 | Incentive Pay Plans | 14,831 | (336,886) |
| 16 | Regulatory Assets - Coal Mine Decommissioning | - | - |
| 17 | Regulatory Liabilities - Renewable Rider | 179 | (4,065) |
| 18 | Income Tax Regulatory Liability | 1,985,381 | (2,544,000) |
| 19 | Income Tax Regulatory Asset | 29,281 | (1,289) |
| 20 | Investment Tax Credit 2024 | - | - |
| 21 | Investment Tax Credit - Sandia | - | - |
| 22 | Investment Tax Credit - Sunbelt | - | - |
| 23 | Investment Tax Credit - Distribution Battery Phase 2 | - | - |
| 24 | Lease Liability | 20,587 | (59,443) |
| 25 | Deferred Credits - Coal Mine Decommissioning | 12,737 | (289,328) |
| 26 | Regulatory Assets - ETA Carrying Charges | - | - |
| 27 | Regulatory Assets - ETA Job Training & Severance | - | - |
| 28 | Regulatory Assets - ETA Payments to State Agencies | - | - |
| 29 | Regulatory Assets - ETA SJGS Plant Decommissioning | - | - |
| 30 | Regulatory Assets - ETA SJGS upfront Financing Cost | - | - |
| 31 | Regulatory Assets - ETA Westmoreland Coal Mine Sev | - | - |
| 32 | Deferred Credits - Joint Use | - | - |
| 33 | Deferred Credits - Pathnet | - | - |
| 34 | Deferred Credits - PVNGS Dry Casks | 61,928 | (2,726) |
| 35 | Other Deferred Credits | 57,089 | (16,790) |
| 36 | Other Liabilities - ETA Job Training and Severance | - | - |
| 37 | Other Liabilities - Navajo Workforce Training | - | - |
| 38 | Other Liabilities | 61,058 | (10,810) |
| 39 | Blackstone Transaction Costs | 139,349 | (6,135) |
| 40 | Injury and Damages | 193,913 | (106,393) |
| 41 | Plant - AFUDC | 28,793 | (654,047) |
| 42 | Plant - Capitalized Interest | 385,413 | (30,997) |
| 43 | Decommissioning and Reclamation Trusts | 365,900 | (7,852,499) |
| 44 | ASC 740-10 (FIN 48) Reclassifications | - | - |
| 45 | Estimated Tax Rate Adjustment | 12,037,822 | (6,495,825) |
| 46 | PVNGS Licensing | - | - |
| 47 | Plant - 263A Adjustment | 58,322 | (1,324,806) |
| 48 | Deferred State Taxes | - | - |
| 49 | Plant - CIAC | 540,174 | (23,780) |
| 50 | Plant - Depreciation Nuclear Fuel | 339,761 | (271,154) |
| 51 | Plant - Removal Cost | 152,831 | (6,728) |
| 52 | Plant - Repairs | 144,908 | (3,291,617) |
| 53 | Plant - Section 174 Deduction | 198,101 | (10,861) |
| 54 | Plant - Asset Retirement Obligation | 632,204 | (39,521) |

| | A | AJ | AK |
|---|---|---|---|
| 1 | **Public Service Company of New Mexico** | | |
| 2 | **Schedule H-12** | | |
| 3 | **Accumulated Tax Deferrals** | | |
| 4 | **Base Period Ending 6/30/2026** | | |
| 5 | **Test Period Ending 9/30/2028** | | |
| 6 | **This schedule is sponsored by PNM Witness Morris** | | |
| 7 | | | |
| 8 | | | |
| 9 | | | |
| 10 | | **Debits** | **Credits** |
| 55 | Plant - Pollution Control Property | - | - |
| 56 | Plant - Liberalized Depreciation: Production | 14,229,703 | (11,002,809) |
| 57 | Plant - Liberalized Depreciation: Transmission | 4,200,730 | - |
| 58 | Plant - Liberalized Depreciation: Distribution | 2,887,726 | - |
| 59 | Plant - Liberalized Depreciation: General and Intangible | - | (10,607,222) |
| 60 | Plant - Liberalized Depreciation: Grid Mod | 38,035 | - |
| 61 | Plant - Liberalized Depreciation: Renewables | - | (95,815) |
| 62 | Plant - Four Corners Imprudence | - | - |
| 63 | Regulatory Assets - SJGS Stranded Costs Units 2&3 | 138,982 | (6,118) |
| 64 | Pension | 93,430 | (13,886) |
| 65 | Retiree Medical | 4,096 | (93,050) |
| 66 | Lease Asset | 199,446 | (8,780) |
| 67 | Loss on Reacquired Debt | 8,660 | (381) |
| 68 | Other Comprehensive Income (OCI) | - | (39,849) |
| 69 | Deferred Credits - SO2 Allowance | - | - |
| 70 | Deferred Debits - Rate Case Expense | - | - |
| 71 | Deferred Debits - Decoupling | - | - |
| 72 | Deferred Debits - Grid Modernization | 160,390 | (86,761) |
| 73 | Deferred Debits - RR Underground Rider | - | - |
| 74 | Energy Storage Agreement | 11,640 | (264,411) |
| 75 | Energy Transition Charges | 1,999 | (45,400) |
| 76 | Prepaid Expenses | 1,944,950 | (1,921,090) |
| 77 | Regulatory Assets - 2024 COVID Bad Debt | - | - |
| 78 | Regulatory Assets - COVID-19 Costs | 23,928 | (1,053) |
| 79 | Regulatory Assets - Community Solar | 2,932 | (66,604) |
| 80 | Regulatory assets - FAC | 1,056,063 | (978,214) |
| 81 | Regulatory Assets - EDAM Costs | - | - |
| 82 | Regulatory Assets - EIM Costs | 83,212 | (3,663) |
| 83 | Regulatory Assets - Energy Efficiency | 478,934 | (21,084) |
| 84 | Regulatory Assets - ETA | - | - |
| 85 | Regulatory Assets - FERC 893 Cyber | - | - |
| 86 | Regulatory Assets - IRP | 137 | (3,111) |
| 87 | Regulatory Assets - Sky Blue Under Recovery | - | - |
| 88 | Regulatory Assets - Renewable Energy | 112 | (2,553) |
| 89 | Regulatory Assets - Renewable Energy Credits | - | - |
| 90 | Regulatory Assets - SJGS External Legal Fees | 438 | (19) |
| 91 | Regulatory Assets - SJGS Final ETA Depcom | 603 | (13,698) |
| 92 | Regulatory Assets - SJGS Final ETA Mine Rec | 276 | (6,277) |
| 93 | Regulatory Assets - SJGS Replacement Resources | 7,367 | (324) |
| 94 | Regulatory Assets - SJGS Undepreciated Investment | - | - |
| 95 | Regulatory Assets - SJGS Underground Coal Mine | - | - |
| 96 | Regulatory Assets - Solar Direct Regulatory Assets | - | - |
| 97 | Regulatory Assets - TOD Rate Pilot Program | 5,098 | (115,810) |
| 98 | Regulatory Assets - Transportation Electrification | 122,097 | (5,375) |

| | A | AJ | AK |
|---|---|---|---|
| 1 | **Public Service Company of New Mexico** | | |
| 2 | **Schedule H-12** | | |
| 3 | **Accumulated Tax Deferrals** | | |
| 4 | **Base Period Ending 6/30/2026** | | |
| 5 | **Test Period Ending 9/30/2028** | | |
| 6 | **This schedule is sponsored by PNM Witness Morris** | | |
| 7 | | | |
| 8 | | | |
| 9 | | | |
| 10 | | **Debits** | **Credits** |
| 99 | Regulatory Assets - WCC Transaction Costs | - | - |
| 100 | Regulatory Liabilities - Energy Efficiency | 5,360 | (121,755) |
| 101 | Regulatory Liabilities - FAC | 1,213,591 | (53,426) |
| 102 | Regulatory Assets - PCB Refinancing Hedge | 18,697 | (823) |
| 103 | Prepaid Expenses: Production | - | (75,982) |
| 104 | Prepaid Expenses: Transmission | - | (1,672,920) |
| 105 | Prepaid Expenses: Transmission (incremental FERC Rates) | - | - |
| 106 | Prepaid Expenses: Distribution | - | (20,348) |
| 107 | Prepaid Expenses: Renewables | - | - |
| 108 | Regulatory Assets - 2024 Rate Change | 21,395 | (942) |
| 109 | Regulatory Assets - 2025 Rate Change | 8,933 | (393) |
| 110 | Regulatory Assets - SJGS Obsolete Inventory | 5,575 | (245) |
| 111 | Regulatory Liabilities - Earnings Test | - | - |
| 112 | Regulatory Assets - PVNGS Lease costs | 2,369 | (104) |
| 113 | Regulatory Assets - PVNGS Undepreciated Investment | 96,493 | (4,248) |
| 114 | Regulatory Assets - ETC Over/Under SPE | - | - |
| 115 | Regulatory Assets - PVNGS Replacement Resources | 2,295 | (101) |
| 116 | Regulatory Assets - Rate Rider 12 UG Rate | 48,132 | (2,119) |
| 117 | Regulatory Assets - Renewable Rider Curr Reg | 14,555 | (330,623) |
| 118 | Regulatory Assets - SJ Energy Transition Property (SPE) | 161,544 | (7,112) |
| 119 | Regulatory Liabilities - Curr Reg Liab-UG Rate Rider 12 | - | - |
| 120 | Regulatory Liabilities - ITC Sandia | - | - |
| 121 | Regulatory Liabilities - ITC Sunbelt | - | - |
| 122 | Regulatory Liabilities - ITC - Distribution Battery Phase 2 | - | - |
| 123 | Regulatory Liabilities - Energy Transition Cost True Up | 51 | (1,165) |
| 124 | Regulatory Liabilities - SJGS Retirements Rate Credit | 70 | (1,590) |
| 125 | Regulatory Liabilities - PVNGS Lease Costs | - | - |
| 126 | Deferred Debits - WS-Transmission Revenue | - | - |
| 127 | Customer Advance | - | - |
| 128 | Deferred Credits - ETA | - | - |
| 129 | Other Liabilities - ETA Coal Mine Severance | - | - |
| 130 | Other Liabilities - ETA State Agency Payments | - | - |
| 131 | SJGS County Ordinance Decommission | - | - |
| 132 | | | |
| 133 | **Total Accumulated Deferred Income Taxes** | 45,458,177 | (54,603,695) |
| 134 | | | |
| 135 | General Ledger ADIT Balance | | |
| 136 | | | |
| 137 | Difference (Rounding) | | |

| | A | AL | AM |
|---|---|---|---|
| 1 | **Public Service Company of New Mexico** | | |
| 2 | **Schedule H-12** | | |
| 3 | **Accumulated Tax Deferrals** | | |
| 4 | **Base Period Ending 6/30/2026** | | |
| 5 | **Test Period Ending 9/30/2028** | | |
| 6 | **This schedule is sponsored by PNM Witness Morris** | | |
| 7 | | | |
| 8 | | | |
| 9 | | **30-Jun-26** | **Model Driven** |
| 10 | | **Balance** | **Calculations** |
| 11 | **Accumulated Deferred Income Taxes** | | |
| 12 | Federal Tax Credit Carryforward | 21,743,653 | - |
| 13 | Federal Tax Credit Carryforward - Renewables | 69,276,999 | - |
| 14 | Net Operating Loss (NOL) | 52,410,431 | - |
| 15 | Incentive Pay Plans | 2,713,620 | - |
| 16 | Regulatory Assets - Coal Mine Decommissioning | - | - |
| 17 | Regulatory Liabilities - Renewable Rider | 1,653,877 | - |
| 18 | Income Tax Regulatory Liability | 51,232,450 | - |
| 19 | Income Tax Regulatory Asset | (65,518,006) | - |
| 20 | Investment Tax Credit 2024 | 7,393,757 | - |
| 21 | Investment Tax Credit - Sandia | - | - |
| 22 | Investment Tax Credit - Sunbelt | - | - |
| 23 | Investment Tax Credit - Distribution Battery Phase 2 | - | - |
| 24 | Lease Liability | 67,294,550 | - |
| 25 | Deferred Credits - Coal Mine Decommissioning | 17,578,714 | - |
| 26 | Regulatory Assets - ETA Carrying Charges | - | - |
| 27 | Regulatory Assets - ETA Job Training & Severance | - | - |
| 28 | Regulatory Assets - ETA Payments to State Agencies | - | - |
| 29 | Regulatory Assets - ETA SJGS Plant Decommissioning | - | - |
| 30 | Regulatory Assets - ETA SJGS upfront Financing Cost | - | - |
| 31 | Regulatory Assets - ETA Westmoreland Coal Mine Sev | - | - |
| 32 | Deferred Credits - Joint Use | 11,140 | 148,575 |
| 33 | Deferred Credits - Pathnet | 1,408,444 | (9,896) |
| 34 | Deferred Credits - PVNGS Dry Casks | 4,158,800 | - |
| 35 | Other Deferred Credits | 2,843,364 | - |
| 36 | Other Liabilities - ETA Job Training and Severance | 19,252 | - |
| 37 | Other Liabilities - Navajo Workforce Training | 25,400 | - |
| 38 | Other Liabilities | 1,494,411 | - |
| 39 | Blackstone Transaction Costs | 934,297 | - |
| 40 | Injury and Damages | 1,129,544 | 928,637 |
| 41 | Plant - AFUDC | (39,194,820) | - |
| 42 | Plant - Capitalized Interest | 17,607,447 | - |
| 43 | Decommissioning and Reclamation Trusts | (101,807,112) | - |
| 44 | ASC 740-10 (FIN 48) Reclassifications | 62,829 | - |
| 45 | Estimated Tax Rate Adjustment | (8,829,313) | - |
| 46 | PVNGS Licensing | 16,871 | - |
| 47 | Plant - 263A Adjustment | (80,078,392) | - |
| 48 | Deferred State Taxes | 3,272,378 | - |
| 49 | Plant - CIAC | 26,503,887 | - |
| 50 | Plant - Depreciation Nuclear Fuel | 8,562,582 | - |
| 51 | Plant - Removal Cost | (4,446,299) | - |
| 52 | Plant - Repairs | (154,567,308) | - |
| 53 | Plant - Section 174 Deduction | 7,509,732 | - |
| 54 | Plant - Asset Retirement Obligation | 108,580,803 | (47,129,483) |

| | A | AL | AM |
|---|---|---|---|
| 1 | **Public Service Company of New Mexico** | | |
| 2 | **Schedule H-12** | | |
| 3 | **Accumulated Tax Deferrals** | | |
| 4 | **Base Period Ending 6/30/2026** | | |
| 5 | **Test Period Ending 9/30/2028** | | |
| 6 | **This schedule is sponsored by PNM Witness Morris** | | |
| 7 | | | |
| 8 | | | |
| 9 | | **30-Jun-26** | **Model Driven** |
| 10 | | **Balance** | **Calculations** |
| 55 | Plant - Pollution Control Property | (2,154,701) | - |
| 56 | Plant - Liberalized Depreciation: Production | (113,158,705) | - |
| 57 | Plant - Liberalized Depreciation: Transmission | (149,462,221) | - |
| 58 | Plant - Liberalized Depreciation: Distribution | (152,065,044) | - |
| 59 | Plant - Liberalized Depreciation: General and Intangible | (21,085,291) | - |
| 60 | Plant - Liberalized Depreciation: Grid Mod | (2,002,883) | - |
| 61 | Plant - Liberalized Depreciation: Renewables | (49,367,522) | - |
| 62 | Plant - Four Corners Imprudence | - | - |
| 63 | Regulatory Assets - SJGS Stranded Costs Units 2&3 | (18,468,026) | 218 |
| 64 | Pension | (46,169,720) | 8,227,066 |
| 65 | Retiree Medical | (10,762,947) | - |
| 66 | Lease Asset | (68,829,053) | - |
| 67 | Loss on Reacquired Debt | (992,009) | 656 |
| 68 | Other Comprehensive Income (OCI) | 9,238,342 | - |
| 69 | Deferred Credits - SO2 Allowance | - | - |
| 70 | Deferred Debits - Rate Case Expense | (93,145) | 93,145 |
| 71 | Deferred Debits - Decoupling | - | - |
| 72 | Deferred Debits - Grid Modernization | (2,703,330) | - |
| 73 | Deferred Debits - RR Underground Rider | - | - |
| 74 | Energy Storage Agreement | 1,883,635 | (22) |
| 75 | Energy Transition Charges | 476,924 | - |
| 76 | Prepaid Expenses | (1,168,330) | - |
| 77 | Regulatory Assets - 2024 COVID Bad Debt | - | - |
| 78 | Regulatory Assets - COVID-19 Costs | (394,712) | 5 |
| 79 | Regulatory Assets - Community Solar | (902,762) | 6 |
| 80 | Regulatory assets - FAC | 362,784 | - |
| 81 | Regulatory Assets - EDAM Costs | (189,936) | 2 |
| 82 | Regulatory Assets - EIM Costs | (2,426,221) | 29 |
| 83 | Regulatory Assets - Energy Efficiency | 207,598 | 2 |
| 84 | Regulatory Assets - ETA | - | - |
| 85 | Regulatory Assets - FERC 893 Cyber | - | - |
| 86 | Regulatory Assets - IRP | (45,484) | 1 |
| 87 | Regulatory Assets - Sky Blue Under Recovery | - | - |
| 88 | Regulatory Assets - Renewable Energy | (46,844) | 2,992,501 |
| 89 | Regulatory Assets - Renewable Energy Credits | (78,530) | - |
| 90 | Regulatory Assets - SJGS External Legal Fees | (113,330) | 1 |
| 91 | Regulatory Assets - SJGS Final ETA Depcom | (666,609) | 666,609 |
| 92 | Regulatory Assets - SJGS Final ETA Mine Rec | (6,798,660) | 6,798,660 |
| 93 | Regulatory Assets - SJGS Replacement Resources | (1,905,162) | 23 |
| 94 | Regulatory Assets - SJGS Undepreciated Investment | - | - |
| 95 | Regulatory Assets - SJGS Underground Coal Mine | - | - |
| 96 | Regulatory Assets - Solar Direct Regulatory Assets | 24,865 | - |
| 97 | Regulatory Assets - TOD Rate Pilot Program | (784,807) | 9 |
| 98 | Regulatory Assets - Transportation Electrification | (2,695,209) | - |

| | A | AL | AM |
|---|---|---|---|
| 1 | **Public Service Company of New Mexico** | | |
| 2 | **Schedule H-12** | | |
| 3 | **Accumulated Tax Deferrals** | | |
| 4 | **Base Period Ending 6/30/2026** | | |
| 5 | **Test Period Ending 9/30/2028** | | |
| 6 | **This schedule is sponsored by PNM Witness Morris** | | |
| 7 | | | |
| 8 | | | |
| 9 | | **30-Jun-26** | **Model Driven** |
| 10 | | **Balance** | **Calculations** |
| 99 | Regulatory Assets - WCC Transaction Costs | - | - |
| 100 | Regulatory Liabilities - Energy Efficiency | 365,992 | - |
| 101 | Regulatory Liabilities - FAC | 2,837,168 | - |
| 102 | Regulatory Assets - PCB Refinancing Hedge | (1,714,006) | 20 |
| 103 | Prepaid Expenses: Production | (445,840) | - |
| 104 | Prepaid Expenses: Transmission | (1,849,743) | - |
| 105 | Prepaid Expenses: Transmission (incremental FERC Rates) | - | - |
| 106 | Prepaid Expenses: Distribution | (135,016) | - |
| 107 | Prepaid Expenses: Renewables | - | - |
| 108 | Regulatory Assets - 2024 Rate Change | (623,818) | 7 |
| 109 | Regulatory Assets - 2025 Rate Change | (409,930) | 5 |
| 110 | Regulatory Assets - SJGS Obsolete Inventory | (1,441,637) | 17 |
| 111 | Regulatory Liabilities - Earnings Test | - | - |
| 112 | Regulatory Assets - PVNGS Lease costs | (5,072) | 0 |
| 113 | Regulatory Assets - PVNGS Undepreciated Investment | (19,417,319) | 9,115,220 |
| 114 | Regulatory Assets - ETC Over/Under SPE | - | - |
| 115 | Regulatory Assets - PVNGS Replacement Resources | (461,800) | 5 |
| 116 | Regulatory Assets - Rate Rider 12 UG Rate | (122,923) | 122,923 |
| 117 | Regulatory Assets - Renewable Rider Curr Reg | (1,892,423) | 1,892,423 |
| 118 | Regulatory Assets - SJ Energy Transition Property (SPE) | (82,680,809) | - |
| 119 | Regulatory Liabilities - Curr Reg Liab-UG Rate Rider 12 | - | - |
| 120 | Regulatory Liabilities - ITC Sandia | - | - |
| 121 | Regulatory Liabilities - ITC Sunbelt | - | - |
| 122 | Regulatory Liabilities - ITC - Distribution Battery Phase 2 | - | - |
| 123 | Regulatory Liabilities - Energy Transition Cost True Up | 296,261 | (4) |
| 124 | Regulatory Liabilities - SJGS Retirements Rate Credit | 23,805 | (0) |
| 125 | Regulatory Liabilities - PVNGS Lease Costs | (0) | 0 |
| 126 | Deferred Debits - WS-Transmission Revenue | (10,593,325) | - |
| 127 | Customer Advance | - | - |
| 128 | Deferred Credits - ETA | - | - |
| 129 | Other Liabilities - ETA Coal Mine Severance | - | - |
| 130 | Other Liabilities - ETA State Agency Payments | - | - |
| 131 | SJGS County Ordinance Decommission | - | - |
| 132 | | | |
| 133 | **Total Accumulated Deferred Income Taxes** | (740,609,497) | (16,152,641) |
| 134 | | | |
| 135 | General Ledger ADIT Balance | (740,609,497) | |
| 136 | | | |
| 137 | Difference (Rounding) | 0 | |

| | A | AN | AO |
|---|---|---|---|
| 1 | **Public Service Company of New Mexico** | | |
| 2 | **Schedule H-12** | | |
| 3 | **Accumulated Tax Deferrals** | | |
| 4 | **Base Period Ending 6/30/2026** | | |
| 5 | **Test Period Ending 9/30/2028** | | |
| 6 | **This schedule is sponsored by PNM Witness Morris** | | |
| 7 | | | |
| 8 | | **Unadjusted** | |
| 9 | | **Base Period** | **Base Period** |
| 10 | | **Balance** | **Adjustments** |
| 11 | **Accumulated Deferred Income Taxes** | | |
| 12 | Federal Tax Credit Carryforward | 21,743,653 | - |
| 13 | Federal Tax Credit Carryforward - Renewables | 69,276,999 | (69,276,999) |
| 14 | Net Operating Loss (NOL) | 52,410,431 | 1,004,907 |
| 15 | Incentive Pay Plans | 2,713,620 | (2,713,620) |
| 16 | Regulatory Assets - Coal Mine Decommissioning | - | - |
| 17 | Regulatory Liabilities - Renewable Rider | 1,653,877 | (1,653,877) |
| 18 | Income Tax Regulatory Liability | 51,232,450 | (1,114,188) |
| 19 | Income Tax Regulatory Asset | (65,518,006) | - |
| 20 | Investment Tax Credit 2024 | 7,393,757 | - |
| 21 | Investment Tax Credit - Sandia | - | - |
| 22 | Investment Tax Credit - Sunbelt | - | - |
| 23 | Investment Tax Credit - Distribution Battery Phase 2 | - | - |
| 24 | Lease Liability | 67,294,550 | (67,294,550) |
| 25 | Deferred Credits - Coal Mine Decommissioning | 17,578,714 | (17,578,714) |
| 26 | Regulatory Assets - ETA Carrying Charges | - | - |
| 27 | Regulatory Assets - ETA Job Training & Severance | - | - |
| 28 | Regulatory Assets - ETA Payments to State Agencies | - | - |
| 29 | Regulatory Assets - ETA SJGS Plant Decommissioning | - | - |
| 30 | Regulatory Assets - ETA SJGS upfront Financing Cost | - | - |
| 31 | Regulatory Assets - ETA Westmoreland Coal Mine Sev | - | - |
| 32 | Deferred Credits - Joint Use | 159,715 | - |
| 33 | Deferred Credits - Pathnet | 1,398,548 | - |
| 34 | Deferred Credits - PVNGS Dry Casks | 4,158,800 | (4,158,800) |
| 35 | Other Deferred Credits | 2,843,364 | (2,843,364) |
| 36 | Other Liabilities - ETA Job Training and Severance | 19,252 | (19,252) |
| 37 | Other Liabilities - Navajo Workforce Training | 25,400 | (25,400) |
| 38 | Other Liabilities | 1,494,411 | (1,494,411) |
| 39 | Blackstone Transaction Costs | 934,297 | (934,297) |
| 40 | Injury and Damages | 2,058,181 | - |
| 41 | Plant - AFUDC | (39,194,820) | - |
| 42 | Plant - Capitalized Interest | 17,607,447 | - |
| 43 | Decommissioning and Reclamation Trusts | (101,807,112) | 101,807,112 |
| 44 | ASC 740-10 (FIN 48) Reclassifications | 62,829 | (62,829) |
| 45 | Estimated Tax Rate Adjustment | (8,829,313) | 8,829,313 |
| 46 | PVNGS Licensing | 16,871 | - |
| 47 | Plant - 263A Adjustment | (80,078,392) | - |
| 48 | Deferred State Taxes | 3,272,378 | (3,272,378) |
| 49 | Plant - CIAC | 26,503,887 | - |
| 50 | Plant - Depreciation Nuclear Fuel | 8,562,582 | - |
| 51 | Plant - Removal Cost | (4,446,299) | - |
| 52 | Plant - Repairs | (154,567,308) | - |
| 53 | Plant - Section 174 Deduction | 7,509,732 | - |
| 54 | Plant - Asset Retirement Obligation | 61,451,319 | (51,869,271) |

| | A | AN | AO |
|---|---|---|---|
| 1 | **Public Service Company of New Mexico** | | |
| 2 | **Schedule H-12** | | |
| 3 | **Accumulated Tax Deferrals** | | |
| 4 | **Base Period Ending 6/30/2026** | | |
| 5 | **Test Period Ending 9/30/2028** | | |
| 6 | **This schedule is sponsored by PNM Witness Morris** | | |
| 7 | | | |
| 8 | | **Unadjusted** | |
| 9 | | **Base Period** | **Base Period** |
| 10 | | **Balance** | **Adjustments** |
| 55 | Plant - Pollution Control Property | (2,154,701) | - |
| 56 | Plant - Liberalized Depreciation: Production | (113,158,705) | (47,621,553) |
| 57 | Plant - Liberalized Depreciation: Transmission | (149,462,221) | (587,254) |
| 58 | Plant - Liberalized Depreciation: Distribution | (152,065,044) | (3,742,315) |
| 59 | Plant - Liberalized Depreciation: General and Intangible | (21,085,291) | - |
| 60 | Plant - Liberalized Depreciation: Grid Mod | (2,002,883) | - |
| 61 | Plant - Liberalized Depreciation: Renewables | (49,367,522) | - |
| 62 | Plant - Four Corners Imprudence | - | - |
| 63 | Regulatory Assets - SJGS Stranded Costs Units 2&3 | (18,467,808) | - |
| 64 | Pension | (37,942,654) | - |
| 65 | Retiree Medical | (10,762,947) | 10,762,947 |
| 66 | Lease Asset | (68,829,053) | 68,829,053 |
| 67 | Loss on Reacquired Debt | (991,352) | - |
| 68 | Other Comprehensive Income (OCI) | 9,238,342 | (9,238,342) |
| 69 | Deferred Credits - SO2 Allowance | - | - |
| 70 | Deferred Debits - Rate Case Expense | - | - |
| 71 | Deferred Debits - Decoupling | - | - |
| 72 | Deferred Debits - Grid Modernization | (2,703,330) | 2,703,330 |
| 73 | Deferred Debits - RR Underground Rider | - | - |
| 74 | Energy Storage Agreement | 1,883,613 | - |
| 75 | Energy Transition Charges | 476,924 | (476,924) |
| 76 | Prepaid Expenses | (1,168,330) | - |
| 77 | Regulatory Assets - 2024 COVID Bad Debt | - | - |
| 78 | Regulatory Assets - COVID-19 Costs | (394,707) | - |
| 79 | Regulatory Assets - Community Solar | (902,756) | - |
| 80 | Regulatory assets - FAC | 362,784 | (362,784) |
| 81 | Regulatory Assets - EDAM Costs | (189,934) | - |
| 82 | Regulatory Assets - EIM Costs | (2,426,193) | - |
| 83 | Regulatory Assets - Energy Efficiency | 207,600 | (336,651) |
| 84 | Regulatory Assets - ETA | - | - |
| 85 | Regulatory Assets - FERC 893 Cyber | - | - |
| 86 | Regulatory Assets - IRP | (45,483) | - |
| 87 | Regulatory Assets - Sky Blue Under Recovery | - | - |
| 88 | Regulatory Assets - Renewable Energy | 2,945,656 | - |
| 89 | Regulatory Assets - Renewable Energy Credits | (78,530) | - |
| 90 | Regulatory Assets - SJGS External Legal Fees | (113,329) | - |
| 91 | Regulatory Assets - SJGS Final ETA Depcom | - | - |
| 92 | Regulatory Assets - SJGS Final ETA Mine Rec | - | - |
| 93 | Regulatory Assets - SJGS Replacement Resources | (1,905,139) | - |
| 94 | Regulatory Assets - SJGS Undepreciated Investment | - | - |
| 95 | Regulatory Assets - SJGS Underground Coal Mine | - | - |
| 96 | Regulatory Assets - Solar Direct Regulatory Assets | 24,865 | (24,865) |
| 97 | Regulatory Assets - TOD Rate Pilot Program | (784,797) | - |
| 98 | Regulatory Assets - Transportation Electrification | (2,695,209) | 2,695,209 |

| | A | AN | AO |
|---|---|---|---|
| 1 | **Public Service Company of New Mexico** | | |
| 2 | **Schedule H-12** | | |
| 3 | **Accumulated Tax Deferrals** | | |
| 4 | **Base Period Ending 6/30/2026** | | |
| 5 | **Test Period Ending 9/30/2028** | | |
| 6 | **This schedule is sponsored by PNM Witness Morris** | | |
| 7 | | | |
| 8 | | **Unadjusted** | |
| 9 | | **Base Period** | **Base Period** |
| 10 | | **Balance** | **Adjustments** |
| 99 | Regulatory Assets - WCC Transaction Costs | - | - |
| 100 | Regulatory Liabilities - Energy Efficiency | 365,992 | (365,992) |
| 101 | Regulatory Liabilities - FAC | 2,837,168 | (2,837,168) |
| 102 | Regulatory Assets - PCB Refinancing Hedge | (1,713,986) | - |
| 103 | Prepaid Expenses: Production | (445,840) | - |
| 104 | Prepaid Expenses: Transmission | (1,849,743) | - |
| 105 | Prepaid Expenses: Transmission (incremental FERC Rates) | - | - |
| 106 | Prepaid Expenses: Distribution | (135,016) | - |
| 107 | Prepaid Expenses: Renewables | - | - |
| 108 | Regulatory Assets - 2024 Rate Change | (623,811) | - |
| 109 | Regulatory Assets - 2025 Rate Change | (409,925) | - |
| 110 | Regulatory Assets - SJGS Obsolete Inventory | (1,441,620) | - |
| 111 | Regulatory Liabilities - Earnings Test | - | - |
| 112 | Regulatory Assets - PVNGS Lease costs | (5,072) | - |
| 113 | Regulatory Assets - PVNGS Undepreciated Investment | (10,302,100) | - |
| 114 | Regulatory Assets - ETC Over/Under SPE | - | - |
| 115 | Regulatory Assets - PVNGS Replacement Resources | (461,794) | - |
| 116 | Regulatory Assets - Rate Rider 12 UG Rate | - | - |
| 117 | Regulatory Assets - Renewable Rider Curr Reg | - | - |
| 118 | Regulatory Assets - SJ Energy Transition Property (SPE) | (82,680,809) | - |
| 119 | Regulatory Liabilities - Curr Reg Liab-UG Rate Rider 12 | - | - |
| 120 | Regulatory Liabilities - ITC Sandia | - | - |
| 121 | Regulatory Liabilities - ITC Sunbelt | - | - |
| 122 | Regulatory Liabilities - ITC - Distribution Battery Phase 2 | - | - |
| 123 | Regulatory Liabilities - Energy Transition Cost True Up | 296,257 | - |
| 124 | Regulatory Liabilities - SJGS Retirements Rate Credit | 23,805 | - |
| 125 | Regulatory Liabilities - PVNGS Lease Costs | - | - |
| 126 | Deferred Debits - WS-Transmission Revenue | (10,593,325) | 10,593,325 |
| 127 | Customer Advance | - | - |
| 128 | Deferred Credits - ETA | - | - |
| 129 | Other Liabilities - ETA Coal Mine Severance | - | - |
| 130 | Other Liabilities - ETA State Agency Payments | - | - |
| 131 | SJGS County Ordinance Decommission | - | - |
| 132 | | | |
| 133 | **Total Accumulated Deferred Income Taxes** | (756,762,139) | (82,680,602) |
| 134 | | | |
| 135 | General Ledger ADIT Balance | | |
| 136 | | | |
| 137 | Difference (Rounding) | | |

| | A | AP | AQ |
|---|---|---|---|
| 1 | **Public Service Company of New Mexico** | | |
| 2 | **Schedule H-12** | | |
| 3 | **Accumulated Tax Deferrals** | | |
| 4 | **Base Period Ending 6/30/2026** | | |
| 5 | **Test Period Ending 9/30/2028** | | |
| 6 | **This schedule is sponsored by PNM Witness Morris** | | |
| 7 | | | |
| 8 | | **Adjusted** | |
| 9 | | **Base Period** | |
| 10 | | **Balance** | **Activity** |
| 11 | **Accumulated Deferred Income Taxes** | | |
| 12 | Federal Tax Credit Carryforward | 21,743,653 | - |
| 13 | Federal Tax Credit Carryforward - Renewables | - | - |
| 14 | Net Operating Loss (NOL) | 53,415,338 | - |
| 15 | Incentive Pay Plans | - | - |
| 16 | Regulatory Assets - Coal Mine Decommissioning | - | - |
| 17 | Regulatory Liabilities - Renewable Rider | - | - |
| 18 | Income Tax Regulatory Liability | 50,118,263 | 1,955,761 |
| 19 | Income Tax Regulatory Asset | (65,518,006) | - |
| 20 | Investment Tax Credit 2024 | 7,393,757 | - |
| 21 | Investment Tax Credit - Sandia | - | - |
| 22 | Investment Tax Credit - Sunbelt | - | - |
| 23 | Investment Tax Credit - Distribution Battery Phase 2 | - | - |
| 24 | Lease Liability | - | - |
| 25 | Deferred Credits - Coal Mine Decommissioning | - | - |
| 26 | Regulatory Assets - ETA Carrying Charges | - | - |
| 27 | Regulatory Assets - ETA Job Training & Severance | - | - |
| 28 | Regulatory Assets - ETA Payments to State Agencies | - | - |
| 29 | Regulatory Assets - ETA SJGS Plant Decommissioning | - | - |
| 30 | Regulatory Assets - ETA SJGS upfront Financing Cost | - | - |
| 31 | Regulatory Assets - ETA Westmoreland Coal Mine Sev | - | - |
| 32 | Deferred Credits - Joint Use | 159,715 | (3,549) |
| 33 | Deferred Credits - Pathnet | 1,398,548 | (1,801) |
| 34 | Deferred Credits - PVNGS Dry Casks | - | - |
| 35 | Other Deferred Credits | - | - |
| 36 | Other Liabilities - ETA Job Training and Severance | - | - |
| 37 | Other Liabilities - Navajo Workforce Training | - | - |
| 38 | Other Liabilities | - | - |
| 39 | Blackstone Transaction Costs | - | - |
| 40 | Injury and Damages | 2,058,181 | - |
| 41 | Plant - AFUDC | (39,194,820) | (219,477) |
| 42 | Plant - Capitalized Interest | 17,607,447 | - |
| 43 | Decommissioning and Reclamation Trusts | - | - |
| 44 | ASC 740-10 (FIN 48) Reclassifications | - | - |
| 45 | Estimated Tax Rate Adjustment | - | - |
| 46 | PVNGS Licensing | 16,871 | (2,249) |
| 47 | Plant - 263A Adjustment | (80,078,392) | - |
| 48 | Deferred State Taxes | - | - |
| 49 | Plant - CIAC | 26,503,887 | - |
| 50 | Plant - Depreciation Nuclear Fuel | 8,562,582 | 82,058 |
| 51 | Plant - Removal Cost | (4,446,299) | - |
| 52 | Plant - Repairs | (154,567,308) | (1,816,788) |
| 53 | Plant - Section 174 Deduction | 7,509,732 | - |
| 54 | Plant - Asset Retirement Obligation | 9,582,049 | 45,936 |

| | A | AP | AQ |
|---|---|---|---|
| 1 | **Public Service Company of New Mexico** | | |
| 2 | **Schedule H-12** | | |
| 3 | **Accumulated Tax Deferrals** | | |
| 4 | **Base Period Ending 6/30/2026** | | |
| 5 | **Test Period Ending 9/30/2028** | | |
| 6 | **This schedule is sponsored by PNM Witness Morris** | | |
| 7 | | | |
| 8 | | **Adjusted** | |
| 9 | | **Base Period** | |
| 10 | | **Balance** | **Activity** |
| 55 | Plant - Pollution Control Property | (2,154,701) | - |
| 56 | Plant - Liberalized Depreciation: Production | (160,780,259) | 1,214,524 |
| 57 | Plant - Liberalized Depreciation: Transmission | (150,049,475) | 510,953 |
| 58 | Plant - Liberalized Depreciation: Distribution | (155,807,359) | (1,525,104) |
| 59 | Plant - Liberalized Depreciation: General and Intangible | (21,085,291) | 315,980 |
| 60 | Plant - Liberalized Depreciation: Grid Mod | (2,002,883) | (68,954) |
| 61 | Plant - Liberalized Depreciation: Renewables | (49,367,522) | 177,348 |
| 62 | Plant - Four Corners Imprudence | - | - |
| 63 | Regulatory Assets - SJGS Stranded Costs Units 2&3 | (18,467,808) | 132,862 |
| 64 | Pension | (37,942,654) | 32,440 |
| 65 | Retiree Medical | - | - |
| 66 | Lease Asset | - | - |
| 67 | Loss on Reacquired Debt | (991,352) | 7,806 |
| 68 | Other Comprehensive Income (OCI) | - | - |
| 69 | Deferred Credits - SO2 Allowance | - | - |
| 70 | Deferred Debits - Rate Case Expense | - | - |
| 71 | Deferred Debits - Decoupling | - | - |
| 72 | Deferred Debits - Grid Modernization | - | - |
| 73 | Deferred Debits - RR Underground Rider | - | - |
| 74 | Energy Storage Agreement | 1,883,613 | (981,749) |
| 75 | Energy Transition Charges | - | - |
| 76 | Prepaid Expenses | (1,168,330) | - |
| 77 | Regulatory Assets - 2024 COVID Bad Debt | - | - |
| 78 | Regulatory Assets - COVID-19 Costs | (394,707) | 22,874 |
| 79 | Regulatory Assets - Community Solar | (902,756) | - |
| 80 | Regulatory assets - FAC | 0 | - |
| 81 | Regulatory Assets - EDAM Costs | (189,934) | (22,294) |
| 82 | Regulatory Assets - EIM Costs | (2,426,193) | 79,547 |
| 83 | Regulatory Assets - Energy Efficiency | (129,051) | - |
| 84 | Regulatory Assets - ETA | - | - |
| 85 | Regulatory Assets - FERC 893 Cyber | - | - |
| 86 | Regulatory Assets - IRP | (45,483) | - |
| 87 | Regulatory Assets - Sky Blue Under Recovery | - | - |
| 88 | Regulatory Assets - Renewable Energy | 2,945,656 | (24,267) |
| 89 | Regulatory Assets - Renewable Energy Credits | (78,530) | - |
| 90 | Regulatory Assets - SJGS External Legal Fees | (113,329) | 419 |
| 91 | Regulatory Assets - SJGS Final ETA Depcom | - | - |
| 92 | Regulatory Assets - SJGS Final ETA Mine Rec | - | - |
| 93 | Regulatory Assets - SJGS Replacement Resources | (1,905,139) | 7,043 |
| 94 | Regulatory Assets - SJGS Undepreciated Investment | - | - |
| 95 | Regulatory Assets - SJGS Underground Coal Mine | - | - |
| 96 | Regulatory Assets - Solar Direct Regulatory Assets | - | - |
| 97 | Regulatory Assets - TOD Rate Pilot Program | (784,797) | - |
| 98 | Regulatory Assets - Transportation Electrification | - | - |

| | A | AP | AQ |
|---|---|---|---|
| 1 | **Public Service Company of New Mexico** | | |
| 2 | **Schedule H-12** | | |
| 3 | **Accumulated Tax Deferrals** | | |
| 4 | **Base Period Ending 6/30/2026** | | |
| 5 | **Test Period Ending 9/30/2028** | | |
| 6 | **This schedule is sponsored by PNM Witness Morris** | | |
| 7 | | | |
| 8 | | **Adjusted** | |
| 9 | | **Base Period** | |
| 10 | | **Balance** | **Activity** |
| 99 | Regulatory Assets - WCC Transaction Costs | - | - |
| 100 | Regulatory Liabilities - Energy Efficiency | - | - |
| 101 | Regulatory Liabilities - FAC | - | - |
| 102 | Regulatory Assets - PCB Refinancing Hedge | (1,713,986) | 17,874 |
| 103 | Prepaid Expenses: Production | (445,840) | - |
| 104 | Prepaid Expenses: Transmission | (1,849,743) | - |
| 105 | Prepaid Expenses: Transmission (incremental FERC Rates) | - | - |
| 106 | Prepaid Expenses: Distribution | (135,016) | - |
| 107 | Prepaid Expenses: Renewables | - | - |
| 108 | Regulatory Assets - 2024 Rate Change | (623,811) | 20,453 |
| 109 | Regulatory Assets - 2025 Rate Change | (409,925) | 8,540 |
| 110 | Regulatory Assets - SJGS Obsolete Inventory | (1,441,620) | 5,329 |
| 111 | Regulatory Liabilities - Earnings Test | - | - |
| 112 | Regulatory Assets - PVNGS Lease costs | (5,072) | - |
| 113 | Regulatory Assets - PVNGS Undepreciated Investment | (10,302,100) | 48,942 |
| 114 | Regulatory Assets - ETC Over/Under SPE | - | - |
| 115 | Regulatory Assets - PVNGS Replacement Resources | (461,794) | 2,194 |
| 116 | Regulatory Assets - Rate Rider 12 UG Rate | - | - |
| 117 | Regulatory Assets - Renewable Rider Curr Reg | - | - |
| 118 | Regulatory Assets - SJ Energy Transition Property (SPE) | (82,680,809) | 273,415 |
| 119 | Regulatory Liabilities - Curr Reg Liab-UG Rate Rider 12 | - | - |
| 120 | Regulatory Liabilities - ITC Sandia | - | - |
| 121 | Regulatory Liabilities - ITC Sunbelt | - | - |
| 122 | Regulatory Liabilities - ITC - Distribution Battery Phase 2 | - | - |
| 123 | Regulatory Liabilities - Energy Transition Cost True Up | 296,257 | (1,114) |
| 124 | Regulatory Liabilities - SJGS Retirements Rate Credit | 23,805 | - |
| 125 | Regulatory Liabilities - PVNGS Lease Costs | - | - |
| 126 | Deferred Debits - WS-Transmission Revenue | - | - |
| 127 | Customer Advance | - | - |
| 128 | Deferred Credits - ETA | - | - |
| 129 | Other Liabilities - ETA Coal Mine Severance | - | - |
| 130 | Other Liabilities - ETA State Agency Payments | - | - |
| 131 | SJGS County Ordinance Decommission | - | - |
| 132 | | | |
| 133 | **Total Accumulated Deferred Income Taxes** | (839,442,741) | 294,952 |
| 134 | | | |
| 135 | General Ledger ADIT Balance | | |
| 136 | | | |
| 137 | Difference (Rounding) | | |

| | A | AR | AS |
|---|---|---|---|
| 1 | **Public Service Company of New Mexico** | | |
| 2 | **Schedule H-12** | | |
| 3 | **Accumulated Tax Deferrals** | | |
| 4 | **Base Period Ending 6/30/2026** | | |
| 5 | **Test Period Ending 9/30/2028** | | |
| 6 | **This schedule is sponsored by PNM Witness Morris** | | |
| 7 | | | |
| 8 | | | |
| 9 | | **31-Jul-26** | |
| 10 | | **Balance** | **Activity** |
| 11 | **Accumulated Deferred Income Taxes** | | |
| 12 | Federal Tax Credit Carryforward | 21,743,653 | - |
| 13 | Federal Tax Credit Carryforward - Renewables | - | - |
| 14 | Net Operating Loss (NOL) | 53,415,338 | - |
| 15 | Incentive Pay Plans | - | - |
| 16 | Regulatory Assets - Coal Mine Decommissioning | - | - |
| 17 | Regulatory Liabilities - Renewable Rider | - | - |
| 18 | Income Tax Regulatory Liability | 52,074,023 | 1,955,761 |
| 19 | Income Tax Regulatory Asset | (65,518,006) | - |
| 20 | Investment Tax Credit 2024 | 7,393,757 | - |
| 21 | Investment Tax Credit - Sandia | - | - |
| 22 | Investment Tax Credit - Sunbelt | - | - |
| 23 | Investment Tax Credit - Distribution Battery Phase 2 | - | - |
| 24 | Lease Liability | - | - |
| 25 | Deferred Credits - Coal Mine Decommissioning | - | - |
| 26 | Regulatory Assets - ETA Carrying Charges | - | - |
| 27 | Regulatory Assets - ETA Job Training & Severance | - | - |
| 28 | Regulatory Assets - ETA Payments to State Agencies | - | - |
| 29 | Regulatory Assets - ETA SJGS Plant Decommissioning | - | - |
| 30 | Regulatory Assets - ETA SJGS upfront Financing Cost | - | - |
| 31 | Regulatory Assets - ETA Westmoreland Coal Mine Sev | - | - |
| 32 | Deferred Credits - Joint Use | 156,166 | (3,549) |
| 33 | Deferred Credits - Pathnet | 1,396,747 | (1,801) |
| 34 | Deferred Credits - PVNGS Dry Casks | - | - |
| 35 | Other Deferred Credits | - | - |
| 36 | Other Liabilities - ETA Job Training and Severance | - | - |
| 37 | Other Liabilities - Navajo Workforce Training | - | - |
| 38 | Other Liabilities | - | - |
| 39 | Blackstone Transaction Costs | - | - |
| 40 | Injury and Damages | 2,058,181 | - |
| 41 | Plant - AFUDC | (39,414,297) | (233,801) |
| 42 | Plant - Capitalized Interest | 17,607,447 | - |
| 43 | Decommissioning and Reclamation Trusts | - | - |
| 44 | ASC 740-10 (FIN 48) Reclassifications | - | - |
| 45 | Estimated Tax Rate Adjustment | - | - |
| 46 | PVNGS Licensing | 14,621 | (2,249) |
| 47 | Plant - 263A Adjustment | (80,078,392) | - |
| 48 | Deferred State Taxes | - | - |
| 49 | Plant - CIAC | 26,503,887 | - |
| 50 | Plant - Depreciation Nuclear Fuel | 8,644,640 | (246,557) |
| 51 | Plant - Removal Cost | (4,446,299) | - |
| 52 | Plant - Repairs | (156,384,096) | (1,231,442) |
| 53 | Plant - Section 174 Deduction | 7,509,732 | - |
| 54 | Plant - Asset Retirement Obligation | 9,627,985 | 46,177 |

| | A | AR | AS |
|---|---|---|---|
| 1 | **Public Service Company of New Mexico** | | |
| 2 | **Schedule H-12** | | |
| 3 | **Accumulated Tax Deferrals** | | |
| 4 | **Base Period Ending 6/30/2026** | | |
| 5 | **Test Period Ending 9/30/2028** | | |
| 6 | **This schedule is sponsored by PNM Witness Morris** | | |
| 7 | | | |
| 8 | | | |
| 9 | | **31-Jul-26** | |
| 10 | | **Balance** | **Activity** |
| 55 | Plant - Pollution Control Property | (2,154,701) | - |
| 56 | Plant - Liberalized Depreciation: Production | (159,565,735) | 1,276,443 |
| 57 | Plant - Liberalized Depreciation: Transmission | (149,538,522) | 1,074,891 |
| 58 | Plant - Liberalized Depreciation: Distribution | (157,332,463) | (2,610,363) |
| 59 | Plant - Liberalized Depreciation: General and Intangible | (20,769,311) | 803,284 |
| 60 | Plant - Liberalized Depreciation: Grid Mod | (2,071,837) | (414,041) |
| 61 | Plant - Liberalized Depreciation: Renewables | (49,190,174) | 176,245 |
| 62 | Plant - Four Corners Imprudence | - | - |
| 63 | Regulatory Assets - SJGS Stranded Costs Units 2&3 | (18,334,946) | 132,862 |
| 64 | Pension | (37,910,214) | 32,440 |
| 65 | Retiree Medical | - | - |
| 66 | Lease Asset | - | - |
| 67 | Loss on Reacquired Debt | (983,546) | 8,135 |
| 68 | Other Comprehensive Income (OCI) | - | - |
| 69 | Deferred Credits - SO2 Allowance | - | - |
| 70 | Deferred Debits - Rate Case Expense | - | - |
| 71 | Deferred Debits - Decoupling | - | - |
| 72 | Deferred Debits - Grid Modernization | - | - |
| 73 | Deferred Debits - RR Underground Rider | - | - |
| 74 | Energy Storage Agreement | 901,864 | (987,252) |
| 75 | Energy Transition Charges | - | - |
| 76 | Prepaid Expenses | (1,168,330) | - |
| 77 | Regulatory Assets - 2024 COVID Bad Debt | - | - |
| 78 | Regulatory Assets - COVID-19 Costs | (371,833) | 22,874 |
| 79 | Regulatory Assets - Community Solar | (902,756) | - |
| 80 | Regulatory assets - FAC | 0 | - |
| 81 | Regulatory Assets - EDAM Costs | (212,228) | (22,294) |
| 82 | Regulatory Assets - EIM Costs | (2,346,645) | 79,547 |
| 83 | Regulatory Assets - Energy Efficiency | (129,051) | - |
| 84 | Regulatory Assets - ETA | - | - |
| 85 | Regulatory Assets - FERC 893 Cyber | - | - |
| 86 | Regulatory Assets - IRP | (45,483) | - |
| 87 | Regulatory Assets - Sky Blue Under Recovery | - | - |
| 88 | Regulatory Assets - Renewable Energy | 2,921,389 | (24,267) |
| 89 | Regulatory Assets - Renewable Energy Credits | (78,530) | - |
| 90 | Regulatory Assets - SJGS External Legal Fees | (112,910) | 419 |
| 91 | Regulatory Assets - SJGS Final ETA Depcom | - | - |
| 92 | Regulatory Assets - SJGS Final ETA Mine Rec | - | - |
| 93 | Regulatory Assets - SJGS Replacement Resources | (1,898,096) | 7,043 |
| 94 | Regulatory Assets - SJGS Undepreciated Investment | - | - |
| 95 | Regulatory Assets - SJGS Underground Coal Mine | - | - |
| 96 | Regulatory Assets - Solar Direct Regulatory Assets | - | - |
| 97 | Regulatory Assets - TOD Rate Pilot Program | (784,797) | - |
| 98 | Regulatory Assets - Transportation Electrification | - | - |

| | A | AR | AS |
|---|---|---|---|
| 1 | **Public Service Company of New Mexico** | | |
| 2 | **Schedule H-12** | | |
| 3 | **Accumulated Tax Deferrals** | | |
| 4 | **Base Period Ending 6/30/2026** | | |
| 5 | **Test Period Ending 9/30/2028** | | |
| 6 | **This schedule is sponsored by PNM Witness Morris** | | |
| 7 | | | |
| 8 | | | |
| 9 | | **31-Jul-26** | |
| 10 | | **Balance** | **Activity** |
| 99 | Regulatory Assets - WCC Transaction Costs | - | - |
| 100 | Regulatory Liabilities - Energy Efficiency | - | - |
| 101 | Regulatory Liabilities - FAC | - | - |
| 102 | Regulatory Assets - PCB Refinancing Hedge | (1,696,112) | 17,874 |
| 103 | Prepaid Expenses: Production | (445,840) | - |
| 104 | Prepaid Expenses: Transmission | (1,849,743) | - |
| 105 | Prepaid Expenses: Transmission (incremental FERC Rates) | - | - |
| 106 | Prepaid Expenses: Distribution | (135,016) | - |
| 107 | Prepaid Expenses: Renewables | - | - |
| 108 | Regulatory Assets - 2024 Rate Change | (603,358) | 20,453 |
| 109 | Regulatory Assets - 2025 Rate Change | (401,385) | 8,540 |
| 110 | Regulatory Assets - SJGS Obsolete Inventory | (1,436,290) | 5,329 |
| 111 | Regulatory Liabilities - Earnings Test | - | - |
| 112 | Regulatory Assets - PVNGS Lease costs | (5,072) | - |
| 113 | Regulatory Assets - PVNGS Undepreciated Investment | (10,253,158) | 48,942 |
| 114 | Regulatory Assets - ETC Over/Under SPE | - | - |
| 115 | Regulatory Assets - PVNGS Replacement Resources | (459,601) | 2,194 |
| 116 | Regulatory Assets - Rate Rider 12 UG Rate | - | - |
| 117 | Regulatory Assets - Renewable Rider Curr Reg | - | - |
| 118 | Regulatory Assets - SJ Energy Transition Property (SPE) | (82,407,394) | 273,415 |
| 119 | Regulatory Liabilities - Curr Reg Liab-UG Rate Rider 12 | - | - |
| 120 | Regulatory Liabilities - ITC Sandia | - | - |
| 121 | Regulatory Liabilities - ITC Sunbelt | - | - |
| 122 | Regulatory Liabilities - ITC - Distribution Battery Phase 2 | - | - |
| 123 | Regulatory Liabilities - Energy Transition Cost True Up | 295,144 | (1,114) |
| 124 | Regulatory Liabilities - SJGS Retirements Rate Credit | 23,805 | - |
| 125 | Regulatory Liabilities - PVNGS Lease Costs | - | - |
| 126 | Deferred Debits - WS-Transmission Revenue | - | - |
| 127 | Customer Advance | - | - |
| 128 | Deferred Credits - ETA | - | - |
| 129 | Other Liabilities - ETA Coal Mine Severance | - | - |
| 130 | Other Liabilities - ETA State Agency Payments | - | - |
| 131 | SJGS County Ordinance Decommission | - | - |
| 132 | | | |
| 133 | **Total Accumulated Deferred Income Taxes** | (839,147,789) | 214,137 |
| 134 | | | |
| 135 | General Ledger ADIT Balance | | |
| 136 | | | |
| 137 | Difference (Rounding) | | |

| | A | AT | AU |
|---|---|---|---|
| 1 | **Public Service Company of New Mexico** | | |
| 2 | **Schedule H-12** | | |
| 3 | **Accumulated Tax Deferrals** | | |
| 4 | **Base Period Ending 6/30/2026** | | |
| 5 | **Test Period Ending 9/30/2028** | | |
| 6 | **This schedule is sponsored by PNM Witness Morris** | | |
| 7 | | | |
| 8 | | | |
| 9 | | **31-Aug-26** | |
| 10 | | **Balance** | **Activity** |
| 11 | **Accumulated Deferred Income Taxes** | | |
| 12 | Federal Tax Credit Carryforward | 21,743,653 | - |
| 13 | Federal Tax Credit Carryforward - Renewables | - | - |
| 14 | Net Operating Loss (NOL) | 53,415,338 | - |
| 15 | Incentive Pay Plans | - | - |
| 16 | Regulatory Assets - Coal Mine Decommissioning | - | - |
| 17 | Regulatory Liabilities - Renewable Rider | - | - |
| 18 | Income Tax Regulatory Liability | 54,029,784 | 1,955,761 |
| 19 | Income Tax Regulatory Asset | (65,518,006) | - |
| 20 | Investment Tax Credit 2024 | 7,393,757 | - |
| 21 | Investment Tax Credit - Sandia | - | - |
| 22 | Investment Tax Credit - Sunbelt | - | - |
| 23 | Investment Tax Credit - Distribution Battery Phase 2 | - | - |
| 24 | Lease Liability | - | - |
| 25 | Deferred Credits - Coal Mine Decommissioning | - | - |
| 26 | Regulatory Assets - ETA Carrying Charges | - | - |
| 27 | Regulatory Assets - ETA Job Training & Severance | - | - |
| 28 | Regulatory Assets - ETA Payments to State Agencies | - | - |
| 29 | Regulatory Assets - ETA SJGS Plant Decommissioning | - | - |
| 30 | Regulatory Assets - ETA SJGS upfront Financing Cost | - | - |
| 31 | Regulatory Assets - ETA Westmoreland Coal Mine Sev | - | - |
| 32 | Deferred Credits - Joint Use | 152,616 | (3,549) |
| 33 | Deferred Credits - Pathnet | 1,394,946 | (1,801) |
| 34 | Deferred Credits - PVNGS Dry Casks | - | - |
| 35 | Other Deferred Credits | - | - |
| 36 | Other Liabilities - ETA Job Training and Severance | - | - |
| 37 | Other Liabilities - Navajo Workforce Training | - | - |
| 38 | Other Liabilities | - | - |
| 39 | Blackstone Transaction Costs | - | - |
| 40 | Injury and Damages | 2,058,181 | - |
| 41 | Plant - AFUDC | (39,648,098) | (247,698) |
| 42 | Plant - Capitalized Interest | 17,607,447 | - |
| 43 | Decommissioning and Reclamation Trusts | - | - |
| 44 | ASC 740-10 (FIN 48) Reclassifications | - | - |
| 45 | Estimated Tax Rate Adjustment | - | - |
| 46 | PVNGS Licensing | 12,372 | (2,249) |
| 47 | Plant - 263A Adjustment | (80,078,392) | - |
| 48 | Deferred State Taxes | - | - |
| 49 | Plant - CIAC | 26,503,887 | - |
| 50 | Plant - Depreciation Nuclear Fuel | 8,398,082 | 178,463 |
| 51 | Plant - Removal Cost | (4,446,299) | - |
| 52 | Plant - Repairs | (157,615,538) | (1,301,192) |
| 53 | Plant - Section 174 Deduction | 7,509,732 | - |
| 54 | Plant - Asset Retirement Obligation | 9,674,162 | 46,419 |

| | A | AT | AU |
|---|---|---|---|
| 1 | **Public Service Company of New Mexico** | | |
| 2 | **Schedule H-12** | | |
| 3 | **Accumulated Tax Deferrals** | | |
| 4 | **Base Period Ending 6/30/2026** | | |
| 5 | **Test Period Ending 9/30/2028** | | |
| 6 | **This schedule is sponsored by PNM Witness Morris** | | |
| 7 | | | |
| 8 | | | |
| 9 | | **31-Aug-26** | |
| 10 | | **Balance** | **Activity** |
| 55 | Plant - Pollution Control Property | (2,154,701) | - |
| 56 | Plant - Liberalized Depreciation: Production | (158,289,293) | 673,107 |
| 57 | Plant - Liberalized Depreciation: Transmission | (148,463,631) | 976,254 |
| 58 | Plant - Liberalized Depreciation: Distribution | (159,942,827) | (1,668,662) |
| 59 | Plant - Liberalized Depreciation: General and Intangible | (19,966,027) | 644,235 |
| 60 | Plant - Liberalized Depreciation: Grid Mod | (2,485,878) | (186,625) |
| 61 | Plant - Liberalized Depreciation: Renewables | (49,013,929) | 113,951 |
| 62 | Plant - Four Corners Imprudence | - | - |
| 63 | Regulatory Assets - SJGS Stranded Costs Units 2&3 | (18,202,084) | 132,862 |
| 64 | Pension | (37,877,774) | 32,440 |
| 65 | Retiree Medical | - | - |
| 66 | Lease Asset | - | - |
| 67 | Loss on Reacquired Debt | (975,411) | 8,293 |
| 68 | Other Comprehensive Income (OCI) | - | - |
| 69 | Deferred Credits - SO2 Allowance | - | - |
| 70 | Deferred Debits - Rate Case Expense | - | - |
| 71 | Deferred Debits - Decoupling | - | - |
| 72 | Deferred Debits - Grid Modernization | - | - |
| 73 | Deferred Debits - RR Underground Rider | - | - |
| 74 | Energy Storage Agreement | (85,389) | (913,568) |
| 75 | Energy Transition Charges | - | - |
| 76 | Prepaid Expenses | (1,168,330) | - |
| 77 | Regulatory Assets - 2024 COVID Bad Debt | - | - |
| 78 | Regulatory Assets - COVID-19 Costs | (348,960) | 22,874 |
| 79 | Regulatory Assets - Community Solar | (902,756) | - |
| 80 | Regulatory assets - FAC | 0 | - |
| 81 | Regulatory Assets - EDAM Costs | (234,522) | (22,294) |
| 82 | Regulatory Assets - EIM Costs | (2,267,098) | 79,547 |
| 83 | Regulatory Assets - Energy Efficiency | (129,051) | - |
| 84 | Regulatory Assets - ETA | - | - |
| 85 | Regulatory Assets - FERC 893 Cyber | - | - |
| 86 | Regulatory Assets - IRP | (45,483) | - |
| 87 | Regulatory Assets - Sky Blue Under Recovery | - | - |
| 88 | Regulatory Assets - Renewable Energy | 2,897,123 | (24,267) |
| 89 | Regulatory Assets - Renewable Energy Credits | (78,530) | - |
| 90 | Regulatory Assets - SJGS External Legal Fees | (112,491) | 419 |
| 91 | Regulatory Assets - SJGS Final ETA Depcom | - | - |
| 92 | Regulatory Assets - SJGS Final ETA Mine Rec | - | - |
| 93 | Regulatory Assets - SJGS Replacement Resources | (1,891,053) | 7,043 |
| 94 | Regulatory Assets - SJGS Undepreciated Investment | - | - |
| 95 | Regulatory Assets - SJGS Underground Coal Mine | - | - |
| 96 | Regulatory Assets - Solar Direct Regulatory Assets | - | - |
| 97 | Regulatory Assets - TOD Rate Pilot Program | (784,797) | - |
| 98 | Regulatory Assets - Transportation Electrification | - | - |

| | A | AT | AU |
|---|---|---|---|
| 1 | **Public Service Company of New Mexico** | | |
| 2 | **Schedule H-12** | | |
| 3 | **Accumulated Tax Deferrals** | | |
| 4 | **Base Period Ending 6/30/2026** | | |
| 5 | **Test Period Ending 9/30/2028** | | |
| 6 | **This schedule is sponsored by PNM Witness Morris** | | |
| 7 | | | |
| 8 | | | |
| 9 | | **31-Aug-26** | |
| 10 | | **Balance** | **Activity** |
| 99 | Regulatory Assets - WCC Transaction Costs | - | - |
| 100 | Regulatory Liabilities - Energy Efficiency | - | - |
| 101 | Regulatory Liabilities - FAC | - | - |
| 102 | Regulatory Assets - PCB Refinancing Hedge | (1,678,238) | 17,874 |
| 103 | Prepaid Expenses: Production | (445,840) | - |
| 104 | Prepaid Expenses: Transmission | (1,849,743) | - |
| 105 | Prepaid Expenses: Transmission (incremental FERC Rates) | - | - |
| 106 | Prepaid Expenses: Distribution | (135,016) | - |
| 107 | Prepaid Expenses: Renewables | - | - |
| 108 | Regulatory Assets - 2024 Rate Change | (582,905) | 20,453 |
| 109 | Regulatory Assets - 2025 Rate Change | (392,845) | 8,540 |
| 110 | Regulatory Assets - SJGS Obsolete Inventory | (1,430,961) | 5,329 |
| 111 | Regulatory Liabilities - Earnings Test | - | - |
| 112 | Regulatory Assets - PVNGS Lease costs | (5,072) | - |
| 113 | Regulatory Assets - PVNGS Undepreciated Investment | (10,204,216) | 48,942 |
| 114 | Regulatory Assets - ETC Over/Under SPE | - | - |
| 115 | Regulatory Assets - PVNGS Replacement Resources | (457,407) | 2,194 |
| 116 | Regulatory Assets - Rate Rider 12 UG Rate | - | - |
| 117 | Regulatory Assets - Renewable Rider Curr Reg | - | - |
| 118 | Regulatory Assets - SJ Energy Transition Property (SPE) | (82,133,978) | 273,415 |
| 119 | Regulatory Liabilities - Curr Reg Liab-UG Rate Rider 12 | - | - |
| 120 | Regulatory Liabilities - ITC Sandia | - | - |
| 121 | Regulatory Liabilities - ITC Sunbelt | - | - |
| 122 | Regulatory Liabilities - ITC - Distribution Battery Phase 2 | - | - |
| 123 | Regulatory Liabilities - Energy Transition Cost True Up | 294,030 | (1,114) |
| 124 | Regulatory Liabilities - SJGS Retirements Rate Credit | 23,805 | - |
| 125 | Regulatory Liabilities - PVNGS Lease Costs | - | - |
| 126 | Deferred Debits - WS-Transmission Revenue | - | - |
| 127 | Customer Advance | - | - |
| 128 | Deferred Credits - ETA | - | - |
| 129 | Other Liabilities - ETA Coal Mine Severance | - | - |
| 130 | Other Liabilities - ETA State Agency Payments | - | - |
| 131 | SJGS County Ordinance Decommission | - | - |
| 132 | | | |
| 133 | **Total Accumulated Deferred Income Taxes** | (838,933,652) | 875,396 |
| 134 | | | |
| 135 | General Ledger ADIT Balance | | |
| 136 | | | |
| 137 | Difference (Rounding) | | |

| | A | AV | AW |
|---|---|---|---|
| 1 | **Public Service Company of New Mexico** | | |
| 2 | **Schedule H-12** | | |
| 3 | **Accumulated Tax Deferrals** | | |
| 4 | **Base Period Ending 6/30/2026** | | |
| 5 | **Test Period Ending 9/30/2028** | | |
| 6 | **This schedule is sponsored by PNM Witness Morris** | | |
| 7 | | | |
| 8 | | | |
| 9 | | **30-Sep-26** | |
| 10 | | **Balance** | **Activity** |
| 11 | **Accumulated Deferred Income Taxes** | | |
| 12 | Federal Tax Credit Carryforward | 21,743,653 | - |
| 13 | Federal Tax Credit Carryforward - Renewables | - | - |
| 14 | Net Operating Loss (NOL) | 53,415,338 | - |
| 15 | Incentive Pay Plans | - | - |
| 16 | Regulatory Assets - Coal Mine Decommissioning | - | - |
| 17 | Regulatory Liabilities - Renewable Rider | - | - |
| 18 | Income Tax Regulatory Liability | 55,985,545 | 1,955,761 |
| 19 | Income Tax Regulatory Asset | (65,518,006) | - |
| 20 | Investment Tax Credit 2024 | 7,393,757 | - |
| 21 | Investment Tax Credit - Sandia | - | - |
| 22 | Investment Tax Credit - Sunbelt | - | - |
| 23 | Investment Tax Credit - Distribution Battery Phase 2 | - | - |
| 24 | Lease Liability | - | - |
| 25 | Deferred Credits - Coal Mine Decommissioning | - | - |
| 26 | Regulatory Assets - ETA Carrying Charges | - | - |
| 27 | Regulatory Assets - ETA Job Training & Severance | - | - |
| 28 | Regulatory Assets - ETA Payments to State Agencies | - | - |
| 29 | Regulatory Assets - ETA SJGS Plant Decommissioning | - | - |
| 30 | Regulatory Assets - ETA SJGS upfront Financing Cost | - | - |
| 31 | Regulatory Assets - ETA Westmoreland Coal Mine Sev | - | - |
| 32 | Deferred Credits - Joint Use | 149,067 | (3,549) |
| 33 | Deferred Credits - Pathnet | 1,393,144 | (1,801) |
| 34 | Deferred Credits - PVNGS Dry Casks | - | - |
| 35 | Other Deferred Credits | - | - |
| 36 | Other Liabilities - ETA Job Training and Severance | - | - |
| 37 | Other Liabilities - Navajo Workforce Training | - | - |
| 38 | Other Liabilities | - | - |
| 39 | Blackstone Transaction Costs | - | - |
| 40 | Injury and Damages | 2,058,181 | - |
| 41 | Plant - AFUDC | (39,895,796) | (266,375) |
| 42 | Plant - Capitalized Interest | 17,607,447 | - |
| 43 | Decommissioning and Reclamation Trusts | - | - |
| 44 | ASC 740-10 (FIN 48) Reclassifications | - | - |
| 45 | Estimated Tax Rate Adjustment | - | - |
| 46 | PVNGS Licensing | 10,123 | (2,249) |
| 47 | Plant - 263A Adjustment | (80,078,392) | - |
| 48 | Deferred State Taxes | - | - |
| 49 | Plant - CIAC | 26,503,887 | - |
| 50 | Plant - Depreciation Nuclear Fuel | 8,576,545 | (146,814) |
| 51 | Plant - Removal Cost | (4,446,299) | - |
| 52 | Plant - Repairs | (158,916,730) | (1,861,429) |
| 53 | Plant - Section 174 Deduction | 7,509,732 | - |
| 54 | Plant - Asset Retirement Obligation | 9,720,581 | 46,661 |

| | A | AV | AW |
|---|---|---|---|
| 1 | **Public Service Company of New Mexico** | | |
| 2 | **Schedule H-12** | | |
| 3 | **Accumulated Tax Deferrals** | | |
| 4 | **Base Period Ending 6/30/2026** | | |
| 5 | **Test Period Ending 9/30/2028** | | |
| 6 | **This schedule is sponsored by PNM Witness Morris** | | |
| 7 | | | |
| 8 | | | |
| 9 | | **30-Sep-26** | |
| 10 | | **Balance** | **Activity** |
| 55 | Plant - Pollution Control Property | (2,154,701) | - |
| 56 | Plant - Liberalized Depreciation: Production | (157,616,185) | 1,153,160 |
| 57 | Plant - Liberalized Depreciation: Transmission | (147,487,376) | 130,205 |
| 58 | Plant - Liberalized Depreciation: Distribution | (161,611,489) | (1,412,729) |
| 59 | Plant - Liberalized Depreciation: General and Intangible | (19,321,792) | 734,026 |
| 60 | Plant - Liberalized Depreciation: Grid Mod | (2,672,502) | (634,403) |
| 61 | Plant - Liberalized Depreciation: Renewables | (48,899,978) | 156,172 |
| 62 | Plant - Four Corners Imprudence | - | - |
| 63 | Regulatory Assets - SJGS Stranded Costs Units 2&3 | (18,069,223) | 132,862 |
| 64 | Pension | (37,845,334) | 32,440 |
| 65 | Retiree Medical | - | - |
| 66 | Lease Asset | - | - |
| 67 | Loss on Reacquired Debt | (967,118) | 8,293 |
| 68 | Other Comprehensive Income (OCI) | - | - |
| 69 | Deferred Credits - SO2 Allowance | - | - |
| 70 | Deferred Debits - Rate Case Expense | - | - |
| 71 | Deferred Debits - Decoupling | - | - |
| 72 | Deferred Debits - Grid Modernization | - | - |
| 73 | Deferred Debits - RR Underground Rider | - | - |
| 74 | Energy Storage Agreement | (998,957) | (902,402) |
| 75 | Energy Transition Charges | - | - |
| 76 | Prepaid Expenses | (1,168,330) | - |
| 77 | Regulatory Assets - 2024 COVID Bad Debt | - | - |
| 78 | Regulatory Assets - COVID-19 Costs | (326,086) | 22,874 |
| 79 | Regulatory Assets - Community Solar | (902,756) | - |
| 80 | Regulatory assets - FAC | 0 | - |
| 81 | Regulatory Assets - EDAM Costs | (256,816) | (22,294) |
| 82 | Regulatory Assets - EIM Costs | (2,187,551) | 79,547 |
| 83 | Regulatory Assets - Energy Efficiency | (129,051) | - |
| 84 | Regulatory Assets - ETA | - | - |
| 85 | Regulatory Assets - FERC 893 Cyber | - | - |
| 86 | Regulatory Assets - IRP | (45,483) | - |
| 87 | Regulatory Assets - Sky Blue Under Recovery | - | - |
| 88 | Regulatory Assets - Renewable Energy | 2,872,856 | (24,267) |
| 89 | Regulatory Assets - Renewable Energy Credits | (78,530) | - |
| 90 | Regulatory Assets - SJGS External Legal Fees | (112,072) | 419 |
| 91 | Regulatory Assets - SJGS Final ETA Depcom | - | - |
| 92 | Regulatory Assets - SJGS Final ETA Mine Rec | - | - |
| 93 | Regulatory Assets - SJGS Replacement Resources | (1,884,010) | 7,043 |
| 94 | Regulatory Assets - SJGS Undepreciated Investment | - | - |
| 95 | Regulatory Assets - SJGS Underground Coal Mine | - | - |
| 96 | Regulatory Assets - Solar Direct Regulatory Assets | - | - |
| 97 | Regulatory Assets - TOD Rate Pilot Program | (784,797) | - |
| 98 | Regulatory Assets - Transportation Electrification | - | - |

| | A | AV | AW |
|---|---|---|---|
| 1 | **Public Service Company of New Mexico** | | |
| 2 | **Schedule H-12** | | |
| 3 | **Accumulated Tax Deferrals** | | |
| 4 | **Base Period Ending 6/30/2026** | | |
| 5 | **Test Period Ending 9/30/2028** | | |
| 6 | **This schedule is sponsored by PNM Witness Morris** | | |
| 7 | | | |
| 8 | | | |
| 9 | | **30-Sep-26** | |
| 10 | | **Balance** | **Activity** |
| 99 | Regulatory Assets - WCC Transaction Costs | - | - |
| 100 | Regulatory Liabilities - Energy Efficiency | - | - |
| 101 | Regulatory Liabilities - FAC | - | - |
| 102 | Regulatory Assets - PCB Refinancing Hedge | (1,660,363) | 17,874 |
| 103 | Prepaid Expenses: Production | (445,840) | - |
| 104 | Prepaid Expenses: Transmission | (1,849,743) | - |
| 105 | Prepaid Expenses: Transmission (incremental FERC Rates) | - | - |
| 106 | Prepaid Expenses: Distribution | (135,016) | - |
| 107 | Prepaid Expenses: Renewables | - | - |
| 108 | Regulatory Assets - 2024 Rate Change | (562,452) | 20,453 |
| 109 | Regulatory Assets - 2025 Rate Change | (384,305) | 8,540 |
| 110 | Regulatory Assets - SJGS Obsolete Inventory | (1,425,632) | 5,329 |
| 111 | Regulatory Liabilities - Earnings Test | - | - |
| 112 | Regulatory Assets - PVNGS Lease costs | (5,072) | - |
| 113 | Regulatory Assets - PVNGS Undepreciated Investment | (10,155,274) | 48,942 |
| 114 | Regulatory Assets - ETC Over/Under SPE | - | - |
| 115 | Regulatory Assets - PVNGS Replacement Resources | (455,213) | 2,194 |
| 116 | Regulatory Assets - Rate Rider 12 UG Rate | - | - |
| 117 | Regulatory Assets - Renewable Rider Curr Reg | - | - |
| 118 | Regulatory Assets - SJ Energy Transition Property (SPE) | (81,860,563) | 273,415 |
| 119 | Regulatory Liabilities - Curr Reg Liab-UG Rate Rider 12 | - | - |
| 120 | Regulatory Liabilities - ITC Sandia | - | - |
| 121 | Regulatory Liabilities - ITC Sunbelt | - | - |
| 122 | Regulatory Liabilities - ITC - Distribution Battery Phase 2 | - | - |
| 123 | Regulatory Liabilities - Energy Transition Cost True Up | 292,916 | (1,114) |
| 124 | Regulatory Liabilities - SJGS Retirements Rate Credit | 23,805 | - |
| 125 | Regulatory Liabilities - PVNGS Lease Costs | - | - |
| 126 | Deferred Debits - WS-Transmission Revenue | - | - |
| 127 | Customer Advance | - | - |
| 128 | Deferred Credits - ETA | - | - |
| 129 | Other Liabilities - ETA Coal Mine Severance | - | - |
| 130 | Other Liabilities - ETA State Agency Payments | - | - |
| 131 | SJGS County Ordinance Decommission | - | - |
| 132 | | | |
| 133 | **Total Accumulated Deferred Income Taxes** | (838,058,256) | (443,215) |
| 134 | | | |
| 135 | General Ledger ADIT Balance | | |
| 136 | | | |
| 137 | Difference (Rounding) | | |

| | A | AX | AY |
|---|---|---|---|
| 1 | **Public Service Company of New Mexico** | | |
| 2 | **Schedule H-12** | | |
| 3 | **Accumulated Tax Deferrals** | | |
| 4 | **Base Period Ending 6/30/2026** | | |
| 5 | **Test Period Ending 9/30/2028** | | |
| 6 | **This schedule is sponsored by PNM Witness Morris** | | |
| 7 | | | |
| 8 | | | |
| 9 | | **31-Oct-26** | |
| 10 | | **Balance** | **Activity** |
| 11 | **Accumulated Deferred Income Taxes** | | |
| 12 | Federal Tax Credit Carryforward | 21,743,653 | - |
| 13 | Federal Tax Credit Carryforward - Renewables | - | - |
| 14 | Net Operating Loss (NOL) | 53,415,338 | - |
| 15 | Incentive Pay Plans | - | - |
| 16 | Regulatory Assets - Coal Mine Decommissioning | - | - |
| 17 | Regulatory Liabilities - Renewable Rider | - | - |
| 18 | Income Tax Regulatory Liability | 57,941,306 | 1,955,761 |
| 19 | Income Tax Regulatory Asset | (65,518,006) | - |
| 20 | Investment Tax Credit 2024 | 7,393,757 | - |
| 21 | Investment Tax Credit - Sandia | - | 32,071,923 |
| 22 | Investment Tax Credit - Sunbelt | - | - |
| 23 | Investment Tax Credit - Distribution Battery Phase 2 | - | - |
| 24 | Lease Liability | - | - |
| 25 | Deferred Credits - Coal Mine Decommissioning | - | - |
| 26 | Regulatory Assets - ETA Carrying Charges | - | - |
| 27 | Regulatory Assets - ETA Job Training & Severance | - | - |
| 28 | Regulatory Assets - ETA Payments to State Agencies | - | - |
| 29 | Regulatory Assets - ETA SJGS Plant Decommissioning | - | - |
| 30 | Regulatory Assets - ETA SJGS upfront Financing Cost | - | - |
| 31 | Regulatory Assets - ETA Westmoreland Coal Mine Sev | - | - |
| 32 | Deferred Credits - Joint Use | 145,518 | (3,549) |
| 33 | Deferred Credits - Pathnet | 1,391,343 | (1,801) |
| 34 | Deferred Credits - PVNGS Dry Casks | - | - |
| 35 | Other Deferred Credits | - | - |
| 36 | Other Liabilities - ETA Job Training and Severance | - | - |
| 37 | Other Liabilities - Navajo Workforce Training | - | - |
| 38 | Other Liabilities | - | - |
| 39 | Blackstone Transaction Costs | - | - |
| 40 | Injury and Damages | 2,058,181 | - |
| 41 | Plant - AFUDC | (40,162,171) | (283,144) |
| 42 | Plant - Capitalized Interest | 17,607,447 | - |
| 43 | Decommissioning and Reclamation Trusts | - | - |
| 44 | ASC 740-10 (FIN 48) Reclassifications | - | - |
| 45 | Estimated Tax Rate Adjustment | - | - |
| 46 | PVNGS Licensing | 7,873 | (2,249) |
| 47 | Plant - 263A Adjustment | (80,078,392) | - |
| 48 | Deferred State Taxes | - | - |
| 49 | Plant - CIAC | 26,503,887 | - |
| 50 | Plant - Depreciation Nuclear Fuel | 8,429,731 | 550,549 |
| 51 | Plant - Removal Cost | (4,446,299) | - |
| 52 | Plant - Repairs | (160,778,159) | (745,124) |
| 53 | Plant - Section 174 Deduction | 7,509,732 | - |
| 54 | Plant - Asset Retirement Obligation | 9,767,242 | 46,905 |

| | A | AX | AY |
|---|---|---|---|
| 1 | **Public Service Company of New Mexico** | | |
| 2 | **Schedule H-12** | | |
| 3 | **Accumulated Tax Deferrals** | | |
| 4 | **Base Period Ending 6/30/2026** | | |
| 5 | **Test Period Ending 9/30/2028** | | |
| 6 | **This schedule is sponsored by PNM Witness Morris** | | |
| 7 | | | |
| 8 | | | |
| 9 | | **31-Oct-26** | |
| 10 | | **Balance** | **Activity** |
| 55 | Plant - Pollution Control Property | (2,154,701) | - |
| 56 | Plant - Liberalized Depreciation: Production | (156,463,025) | 487,651 |
| 57 | Plant - Liberalized Depreciation: Transmission | (147,357,171) | 339,965 |
| 58 | Plant - Liberalized Depreciation: Distribution | (163,024,218) | (1,056,501) |
| 59 | Plant - Liberalized Depreciation: General and Intangible | (18,587,766) | 874,886 |
| 60 | Plant - Liberalized Depreciation: Grid Mod | (3,306,905) | (56,330) |
| 61 | Plant - Liberalized Depreciation: Renewables | (48,743,805) | 124,701 |
| 62 | Plant - Four Corners Imprudence | - | - |
| 63 | Regulatory Assets - SJGS Stranded Costs Units 2&3 | (17,936,361) | 132,862 |
| 64 | Pension | (37,812,894) | 32,440 |
| 65 | Retiree Medical | - | - |
| 66 | Lease Asset | - | - |
| 67 | Loss on Reacquired Debt | (958,825) | 8,293 |
| 68 | Other Comprehensive Income (OCI) | - | - |
| 69 | Deferred Credits - SO2 Allowance | - | - |
| 70 | Deferred Debits - Rate Case Expense | - | - |
| 71 | Deferred Debits - Decoupling | - | - |
| 72 | Deferred Debits - Grid Modernization | - | - |
| 73 | Deferred Debits - RR Underground Rider | - | - |
| 74 | Energy Storage Agreement | (1,901,358) | (601,617) |
| 75 | Energy Transition Charges | - | - |
| 76 | Prepaid Expenses | (1,168,330) | - |
| 77 | Regulatory Assets - 2024 COVID Bad Debt | - | - |
| 78 | Regulatory Assets - COVID-19 Costs | (303,212) | 22,874 |
| 79 | Regulatory Assets - Community Solar | (902,756) | - |
| 80 | Regulatory assets - FAC | 0 | - |
| 81 | Regulatory Assets - EDAM Costs | (279,110) | (22,294) |
| 82 | Regulatory Assets - EIM Costs | (2,108,004) | 79,547 |
| 83 | Regulatory Assets - Energy Efficiency | (129,051) | - |
| 84 | Regulatory Assets - ETA | - | - |
| 85 | Regulatory Assets - FERC 893 Cyber | - | - |
| 86 | Regulatory Assets - IRP | (45,483) | - |
| 87 | Regulatory Assets - Sky Blue Under Recovery | - | - |
| 88 | Regulatory Assets - Renewable Energy | 2,848,589 | (24,267) |
| 89 | Regulatory Assets - Renewable Energy Credits | (78,530) | - |
| 90 | Regulatory Assets - SJGS External Legal Fees | (111,653) | 419 |
| 91 | Regulatory Assets - SJGS Final ETA Depcom | - | - |
| 92 | Regulatory Assets - SJGS Final ETA Mine Rec | - | - |
| 93 | Regulatory Assets - SJGS Replacement Resources | (1,876,967) | 7,043 |
| 94 | Regulatory Assets - SJGS Undepreciated Investment | - | - |
| 95 | Regulatory Assets - SJGS Underground Coal Mine | - | - |
| 96 | Regulatory Assets - Solar Direct Regulatory Assets | - | - |
| 97 | Regulatory Assets - TOD Rate Pilot Program | (784,797) | - |
| 98 | Regulatory Assets - Transportation Electrification | - | - |

| | A | AX | AY |
|---|---|---|---|
| 1 | **Public Service Company of New Mexico** | | |
| 2 | **Schedule H-12** | | |
| 3 | **Accumulated Tax Deferrals** | | |
| 4 | **Base Period Ending 6/30/2026** | | |
| 5 | **Test Period Ending 9/30/2028** | | |
| 6 | **This schedule is sponsored by PNM Witness Morris** | | |
| 7 | | | |
| 8 | | | |
| 9 | | **31-Oct-26** | |
| 10 | | **Balance** | **Activity** |
| 99 | Regulatory Assets - WCC Transaction Costs | - | - |
| 100 | Regulatory Liabilities - Energy Efficiency | - | - |
| 101 | Regulatory Liabilities - FAC | - | - |
| 102 | Regulatory Assets - PCB Refinancing Hedge | (1,642,489) | 17,874 |
| 103 | Prepaid Expenses: Production | (445,840) | - |
| 104 | Prepaid Expenses: Transmission | (1,849,743) | - |
| 105 | Prepaid Expenses: Transmission (incremental FERC Rates) | - | - |
| 106 | Prepaid Expenses: Distribution | (135,016) | - |
| 107 | Prepaid Expenses: Renewables | - | - |
| 108 | Regulatory Assets - 2024 Rate Change | (541,999) | 20,453 |
| 109 | Regulatory Assets - 2025 Rate Change | (375,765) | 8,540 |
| 110 | Regulatory Assets - SJGS Obsolete Inventory | (1,420,302) | 5,329 |
| 111 | Regulatory Liabilities - Earnings Test | - | - |
| 112 | Regulatory Assets - PVNGS Lease costs | (5,072) | - |
| 113 | Regulatory Assets - PVNGS Undepreciated Investment | (10,106,332) | 48,942 |
| 114 | Regulatory Assets - ETC Over/Under SPE | - | - |
| 115 | Regulatory Assets - PVNGS Replacement Resources | (453,019) | 2,194 |
| 116 | Regulatory Assets - Rate Rider 12 UG Rate | - | - |
| 117 | Regulatory Assets - Renewable Rider Curr Reg | - | - |
| 118 | Regulatory Assets - SJ Energy Transition Property (SPE) | (81,587,147) | 273,415 |
| 119 | Regulatory Liabilities - Curr Reg Liab-UG Rate Rider 12 | - | - |
| 120 | Regulatory Liabilities - ITC Sandia | - | - |
| 121 | Regulatory Liabilities - ITC Sunbelt | - | - |
| 122 | Regulatory Liabilities - ITC - Distribution Battery Phase 2 | - | - |
| 123 | Regulatory Liabilities - Energy Transition Cost True Up | 291,802 | (1,114) |
| 124 | Regulatory Liabilities - SJGS Retirements Rate Credit | 23,805 | - |
| 125 | Regulatory Liabilities - PVNGS Lease Costs | - | - |
| 126 | Deferred Debits - WS-Transmission Revenue | - | - |
| 127 | Customer Advance | - | - |
| 128 | Deferred Credits - ETA | - | - |
| 129 | Other Liabilities - ETA Coal Mine Severance | - | - |
| 130 | Other Liabilities - ETA State Agency Payments | - | - |
| 131 | SJGS County Ordinance Decommission | - | - |
| 132 | | | |
| 133 | **Total Accumulated Deferred Income Taxes** | (838,501,471) | 34,314,578 |
| 134 | | | |
| 135 | General Ledger ADIT Balance | | |
| 136 | | | |
| 137 | Difference (Rounding) | | |

| | A | AZ | BA |
|---|---|---|---|
| 1 | **Public Service Company of New Mexico** | | |
| 2 | **Schedule H-12** | | |
| 3 | **Accumulated Tax Deferrals** | | |
| 4 | **Base Period Ending 6/30/2026** | | |
| 5 | **Test Period Ending 9/30/2028** | | |
| 6 | **This schedule is sponsored by PNM Witness Morris** | | |
| 7 | | | |
| 8 | | | |
| 9 | | **30-Nov-26** | |
| 10 | | **Balance** | **Activity** |
| 11 | **Accumulated Deferred Income Taxes** | | |
| 12 | Federal Tax Credit Carryforward | 21,743,653 | - |
| 13 | Federal Tax Credit Carryforward - Renewables | - | - |
| 14 | Net Operating Loss (NOL) | 53,415,338 | - |
| 15 | Incentive Pay Plans | - | - |
| 16 | Regulatory Assets - Coal Mine Decommissioning | - | - |
| 17 | Regulatory Liabilities - Renewable Rider | - | - |
| 18 | Income Tax Regulatory Liability | 59,897,067 | 1,955,761 |
| 19 | Income Tax Regulatory Asset | (65,518,006) | - |
| 20 | Investment Tax Credit 2024 | 7,393,757 | - |
| 21 | Investment Tax Credit - Sandia | 32,071,923 | (32,071,923) |
| 22 | Investment Tax Credit - Sunbelt | - | - |
| 23 | Investment Tax Credit - Distribution Battery Phase 2 | - | - |
| 24 | Lease Liability | - | - |
| 25 | Deferred Credits - Coal Mine Decommissioning | - | - |
| 26 | Regulatory Assets - ETA Carrying Charges | - | - |
| 27 | Regulatory Assets - ETA Job Training & Severance | - | - |
| 28 | Regulatory Assets - ETA Payments to State Agencies | - | - |
| 29 | Regulatory Assets - ETA SJGS Plant Decommissioning | - | - |
| 30 | Regulatory Assets - ETA SJGS upfront Financing Cost | - | - |
| 31 | Regulatory Assets - ETA Westmoreland Coal Mine Sev | - | - |
| 32 | Deferred Credits - Joint Use | 141,969 | (3,549) |
| 33 | Deferred Credits - Pathnet | 1,389,542 | (1,801) |
| 34 | Deferred Credits - PVNGS Dry Casks | - | - |
| 35 | Other Deferred Credits | - | - |
| 36 | Other Liabilities - ETA Job Training and Severance | - | - |
| 37 | Other Liabilities - Navajo Workforce Training | - | - |
| 38 | Other Liabilities | - | - |
| 39 | Blackstone Transaction Costs | - | - |
| 40 | Injury and Damages | 2,058,181 | - |
| 41 | Plant - AFUDC | (40,445,315) | (311,137) |
| 42 | Plant - Capitalized Interest | 17,607,447 | - |
| 43 | Decommissioning and Reclamation Trusts | - | - |
| 44 | ASC 740-10 (FIN 48) Reclassifications | - | - |
| 45 | Estimated Tax Rate Adjustment | - | - |
| 46 | PVNGS Licensing | 5,624 | (2,249) |
| 47 | Plant - 263A Adjustment | (80,078,392) | - |
| 48 | Deferred State Taxes | - | - |
| 49 | Plant - CIAC | 26,503,887 | - |
| 50 | Plant - Depreciation Nuclear Fuel | 8,980,280 | (264,131) |
| 51 | Plant - Removal Cost | (4,446,299) | - |
| 52 | Plant - Repairs | (161,523,283) | (5,622,716) |
| 53 | Plant - Section 174 Deduction | 7,509,732 | - |
| 54 | Plant - Asset Retirement Obligation | 9,814,147 | 47,151 |

| | A | AZ | BA |
|---|---|---|---|
| 1 | **Public Service Company of New Mexico** | | |
| 2 | **Schedule H-12** | | |
| 3 | **Accumulated Tax Deferrals** | | |
| 4 | **Base Period Ending 6/30/2026** | | |
| 5 | **Test Period Ending 9/30/2028** | | |
| 6 | **This schedule is sponsored by PNM Witness Morris** | | |
| 7 | | | |
| 8 | | | |
| 9 | | **30-Nov-26** | |
| 10 | | **Balance** | **Activity** |
| 55 | Plant - Pollution Control Property | (2,154,701) | - |
| 56 | Plant - Liberalized Depreciation: Production | (155,975,374) | 1,179,440 |
| 57 | Plant - Liberalized Depreciation: Transmission | (147,017,206) | (482,956) |
| 58 | Plant - Liberalized Depreciation: Distribution | (164,080,719) | 107,046 |
| 59 | Plant - Liberalized Depreciation: General and Intangible | (17,712,880) | (131,876) |
| 60 | Plant - Liberalized Depreciation: Grid Mod | (3,363,235) | 93,930 |
| 61 | Plant - Liberalized Depreciation: Renewables | (48,619,104) | 176,021 |
| 62 | Plant - Four Corners Imprudence | - | - |
| 63 | Regulatory Assets - SJGS Stranded Costs Units 2&3 | (17,803,499) | 132,862 |
| 64 | Pension | (37,780,454) | (855,030) |
| 65 | Retiree Medical | - | - |
| 66 | Lease Asset | - | - |
| 67 | Loss on Reacquired Debt | (950,533) | 8,293 |
| 68 | Other Comprehensive Income (OCI) | - | - |
| 69 | Deferred Credits - SO2 Allowance | - | - |
| 70 | Deferred Debits - Rate Case Expense | - | - |
| 71 | Deferred Debits - Decoupling | - | - |
| 72 | Deferred Debits - Grid Modernization | - | - |
| 73 | Deferred Debits - RR Underground Rider | - | - |
| 74 | Energy Storage Agreement | (2,502,975) | (608,259) |
| 75 | Energy Transition Charges | - | - |
| 76 | Prepaid Expenses | (1,168,330) | - |
| 77 | Regulatory Assets - 2024 COVID Bad Debt | - | - |
| 78 | Regulatory Assets - COVID-19 Costs | (280,338) | 22,874 |
| 79 | Regulatory Assets - Community Solar | (902,756) | - |
| 80 | Regulatory assets - FAC | 0 | - |
| 81 | Regulatory Assets - EDAM Costs | (301,404) | (22,294) |
| 82 | Regulatory Assets - EIM Costs | (2,028,456) | 79,547 |
| 83 | Regulatory Assets - Energy Efficiency | (129,051) | - |
| 84 | Regulatory Assets - ETA | - | - |
| 85 | Regulatory Assets - FERC 893 Cyber | - | - |
| 86 | Regulatory Assets - IRP | (45,483) | - |
| 87 | Regulatory Assets - Sky Blue Under Recovery | - | - |
| 88 | Regulatory Assets - Renewable Energy | 2,824,322 | (24,267) |
| 89 | Regulatory Assets - Renewable Energy Credits | (78,530) | - |
| 90 | Regulatory Assets - SJGS External Legal Fees | (111,234) | 419 |
| 91 | Regulatory Assets - SJGS Final ETA Depcom | - | - |
| 92 | Regulatory Assets - SJGS Final ETA Mine Rec | - | - |
| 93 | Regulatory Assets - SJGS Replacement Resources | (1,869,924) | 7,043 |
| 94 | Regulatory Assets - SJGS Undepreciated Investment | - | - |
| 95 | Regulatory Assets - SJGS Underground Coal Mine | - | - |
| 96 | Regulatory Assets - Solar Direct Regulatory Assets | - | - |
| 97 | Regulatory Assets - TOD Rate Pilot Program | (784,797) | - |
| 98 | Regulatory Assets - Transportation Electrification | - | - |

| | A | AZ | BA |
|---|---|---|---|
| 1 | **Public Service Company of New Mexico** | | |
| 2 | **Schedule H-12** | | |
| 3 | **Accumulated Tax Deferrals** | | |
| 4 | **Base Period Ending 6/30/2026** | | |
| 5 | **Test Period Ending 9/30/2028** | | |
| 6 | **This schedule is sponsored by PNM Witness Morris** | | |
| 7 | | | |
| 8 | | | |
| 9 | | **30-Nov-26** | |
| 10 | | **Balance** | **Activity** |
| 99 | Regulatory Assets - WCC Transaction Costs | - | - |
| 100 | Regulatory Liabilities - Energy Efficiency | - | - |
| 101 | Regulatory Liabilities - FAC | - | - |
| 102 | Regulatory Assets - PCB Refinancing Hedge | (1,624,615) | 17,874 |
| 103 | Prepaid Expenses: Production | (445,840) | - |
| 104 | Prepaid Expenses: Transmission | (1,849,743) | - |
| 105 | Prepaid Expenses: Transmission (incremental FERC Rates) | - | - |
| 106 | Prepaid Expenses: Distribution | (135,016) | - |
| 107 | Prepaid Expenses: Renewables | - | - |
| 108 | Regulatory Assets - 2024 Rate Change | (521,547) | 20,453 |
| 109 | Regulatory Assets - 2025 Rate Change | (367,225) | 8,540 |
| 110 | Regulatory Assets - SJGS Obsolete Inventory | (1,414,973) | 5,329 |
| 111 | Regulatory Liabilities - Earnings Test | - | - |
| 112 | Regulatory Assets - PVNGS Lease costs | (5,072) | - |
| 113 | Regulatory Assets - PVNGS Undepreciated Investment | (10,057,390) | 48,942 |
| 114 | Regulatory Assets - ETC Over/Under SPE | - | - |
| 115 | Regulatory Assets - PVNGS Replacement Resources | (450,825) | 2,194 |
| 116 | Regulatory Assets - Rate Rider 12 UG Rate | - | - |
| 117 | Regulatory Assets - Renewable Rider Curr Reg | - | - |
| 118 | Regulatory Assets - SJ Energy Transition Property (SPE) | (81,313,732) | 273,415 |
| 119 | Regulatory Liabilities - Curr Reg Liab-UG Rate Rider 12 | - | - |
| 120 | Regulatory Liabilities - ITC Sandia | - | 7,087,254 |
| 121 | Regulatory Liabilities - ITC Sunbelt | - | - |
| 122 | Regulatory Liabilities - ITC - Distribution Battery Phase 2 | - | - |
| 123 | Regulatory Liabilities - Energy Transition Cost True Up | 290,689 | (1,114) |
| 124 | Regulatory Liabilities - SJGS Retirements Rate Credit | 23,805 | - |
| 125 | Regulatory Liabilities - PVNGS Lease Costs | - | - |
| 126 | Deferred Debits - WS-Transmission Revenue | - | - |
| 127 | Customer Advance | - | - |
| 128 | Deferred Credits - ETA | - | - |
| 129 | Other Liabilities - ETA Coal Mine Severance | - | - |
| 130 | Other Liabilities - ETA State Agency Payments | - | - |
| 131 | SJGS County Ordinance Decommission | - | - |
| 132 | | | |
| 133 | **Total Accumulated Deferred Income Taxes** | (804,186,893) | (29,128,916) |
| 134 | | | |
| 135 | General Ledger ADIT Balance | | |
| 136 | | | |
| 137 | Difference (Rounding) | | |

| | A | BB | BC |
|---|---|---|---|
| 1 | **Public Service Company of New Mexico** | | |
| 2 | **Schedule H-12** | | |
| 3 | **Accumulated Tax Deferrals** | | |
| 4 | **Base Period Ending 6/30/2026** | | |
| 5 | **Test Period Ending 9/30/2028** | | |
| 6 | **This schedule is sponsored by PNM Witness Morris** | | |
| 7 | | | |
| 8 | | | |
| 9 | | **31-Dec-26** | |
| 10 | | **Balance** | **Activity** |
| 11 | **Accumulated Deferred Income Taxes** | | |
| 12 | Federal Tax Credit Carryforward | 21,743,653 | - |
| 13 | Federal Tax Credit Carryforward - Renewables | - | - |
| 14 | Net Operating Loss (NOL) | 53,415,338 | - |
| 15 | Incentive Pay Plans | - | - |
| 16 | Regulatory Assets - Coal Mine Decommissioning | - | - |
| 17 | Regulatory Liabilities - Renewable Rider | - | - |
| 18 | Income Tax Regulatory Liability | 61,852,827 | 1,950,139 |
| 19 | Income Tax Regulatory Asset | (65,518,006) | - |
| 20 | Investment Tax Credit 2024 | 7,393,757 | - |
| 21 | Investment Tax Credit - Sandia | - | - |
| 22 | Investment Tax Credit - Sunbelt | - | - |
| 23 | Investment Tax Credit - Distribution Battery Phase 2 | - | - |
| 24 | Lease Liability | - | - |
| 25 | Deferred Credits - Coal Mine Decommissioning | - | - |
| 26 | Regulatory Assets - ETA Carrying Charges | - | - |
| 27 | Regulatory Assets - ETA Job Training & Severance | - | - |
| 28 | Regulatory Assets - ETA Payments to State Agencies | - | - |
| 29 | Regulatory Assets - ETA SJGS Plant Decommissioning | - | - |
| 30 | Regulatory Assets - ETA SJGS upfront Financing Cost | - | - |
| 31 | Regulatory Assets - ETA Westmoreland Coal Mine Sev | - | - |
| 32 | Deferred Credits - Joint Use | 138,419 | (3,549) |
| 33 | Deferred Credits - Pathnet | 1,387,741 | (1,801) |
| 34 | Deferred Credits - PVNGS Dry Casks | - | - |
| 35 | Other Deferred Credits | - | - |
| 36 | Other Liabilities - ETA Job Training and Severance | - | - |
| 37 | Other Liabilities - Navajo Workforce Training | - | - |
| 38 | Other Liabilities | - | - |
| 39 | Blackstone Transaction Costs | - | - |
| 40 | Injury and Damages | 2,058,181 | - |
| 41 | Plant - AFUDC | (40,756,452) | (301,157) |
| 42 | Plant - Capitalized Interest | 17,607,447 | - |
| 43 | Decommissioning and Reclamation Trusts | - | - |
| 44 | ASC 740-10 (FIN 48) Reclassifications | - | - |
| 45 | Estimated Tax Rate Adjustment | - | - |
| 46 | PVNGS Licensing | 3,374 | (281) |
| 47 | Plant - 263A Adjustment | (80,078,392) | - |
| 48 | Deferred State Taxes | - | - |
| 49 | Plant - CIAC | 26,503,887 | - |
| 50 | Plant - Depreciation Nuclear Fuel | 8,716,149 | (29,778) |
| 51 | Plant - Removal Cost | (4,446,299) | - |
| 52 | Plant - Repairs | (167,145,999) | (1,439,120) |
| 53 | Plant - Section 174 Deduction | 7,509,732 | - |
| 54 | Plant - Asset Retirement Obligation | 9,861,298 | 45,474 |

| | A | BB | BC |
|---|---|---|---|
| 1 | **Public Service Company of New Mexico** | | |
| 2 | **Schedule H-12** | | |
| 3 | **Accumulated Tax Deferrals** | | |
| 4 | **Base Period Ending 6/30/2026** | | |
| 5 | **Test Period Ending 9/30/2028** | | |
| 6 | **This schedule is sponsored by PNM Witness Morris** | | |
| 7 | | | |
| 8 | | | |
| 9 | | **31-Dec-26** | |
| 10 | | **Balance** | **Activity** |
| 55 | Plant - Pollution Control Property | (2,154,701) | - |
| 56 | Plant - Liberalized Depreciation: Production | (154,795,934) | 1,004,737 |
| 57 | Plant - Liberalized Depreciation: Transmission | (147,500,162) | (178,601) |
| 58 | Plant - Liberalized Depreciation: Distribution | (163,973,674) | (945,086) |
| 59 | Plant - Liberalized Depreciation: General and Intangible | (17,844,756) | 613,631 |
| 60 | Plant - Liberalized Depreciation: Grid Mod | (3,269,305) | (1,536,938) |
| 61 | Plant - Liberalized Depreciation: Renewables | (48,443,083) | 181,802 |
| 62 | Plant - Four Corners Imprudence | - | - |
| 63 | Regulatory Assets - SJGS Stranded Costs Units 2&3 | (17,670,637) | 132,862 |
| 64 | Pension | (38,635,484) | 90,669 |
| 65 | Retiree Medical | - | - |
| 66 | Lease Asset | - | - |
| 67 | Loss on Reacquired Debt | (942,240) | 8,293 |
| 68 | Other Comprehensive Income (OCI) | - | - |
| 69 | Deferred Credits - SO2 Allowance | - | - |
| 70 | Deferred Debits - Rate Case Expense | - | - |
| 71 | Deferred Debits - Decoupling | - | - |
| 72 | Deferred Debits - Grid Modernization | - | - |
| 73 | Deferred Debits - RR Underground Rider | - | - |
| 74 | Energy Storage Agreement | (3,111,234) | (566,150) |
| 75 | Energy Transition Charges | - | - |
| 76 | Prepaid Expenses | (1,168,330) | - |
| 77 | Regulatory Assets - 2024 COVID Bad Debt | - | - |
| 78 | Regulatory Assets - COVID-19 Costs | (257,464) | 22,874 |
| 79 | Regulatory Assets - Community Solar | (902,756) | - |
| 80 | Regulatory assets - FAC | 0 | - |
| 81 | Regulatory Assets - EDAM Costs | (323,698) | (51,476) |
| 82 | Regulatory Assets - EIM Costs | (1,948,909) | 79,547 |
| 83 | Regulatory Assets - Energy Efficiency | (129,051) | - |
| 84 | Regulatory Assets - ETA | - | - |
| 85 | Regulatory Assets - FERC 893 Cyber | - | - |
| 86 | Regulatory Assets - IRP | (45,483) | - |
| 87 | Regulatory Assets - Sky Blue Under Recovery | - | - |
| 88 | Regulatory Assets - Renewable Energy | 2,800,055 | (24,267) |
| 89 | Regulatory Assets - Renewable Energy Credits | (78,530) | - |
| 90 | Regulatory Assets - SJGS External Legal Fees | (110,815) | 419 |
| 91 | Regulatory Assets - SJGS Final ETA Depcom | - | - |
| 92 | Regulatory Assets - SJGS Final ETA Mine Rec | - | - |
| 93 | Regulatory Assets - SJGS Replacement Resources | (1,862,881) | 7,043 |
| 94 | Regulatory Assets - SJGS Undepreciated Investment | - | - |
| 95 | Regulatory Assets - SJGS Underground Coal Mine | - | - |
| 96 | Regulatory Assets - Solar Direct Regulatory Assets | - | - |
| 97 | Regulatory Assets - TOD Rate Pilot Program | (784,797) | - |
| 98 | Regulatory Assets - Transportation Electrification | - | - |

| | A | BB | BC |
|---|---|---|---|
| 1 | **Public Service Company of New Mexico** | | |
| 2 | **Schedule H-12** | | |
| 3 | **Accumulated Tax Deferrals** | | |
| 4 | **Base Period Ending 6/30/2026** | | |
| 5 | **Test Period Ending 9/30/2028** | | |
| 6 | **This schedule is sponsored by PNM Witness Morris** | | |
| 7 | | | |
| 8 | | | |
| 9 | | **31-Dec-26** | |
| 10 | | **Balance** | **Activity** |
| 99 | Regulatory Assets - WCC Transaction Costs | - | - |
| 100 | Regulatory Liabilities - Energy Efficiency | - | - |
| 101 | Regulatory Liabilities - FAC | - | - |
| 102 | Regulatory Assets - PCB Refinancing Hedge | (1,606,741) | 17,874 |
| 103 | Prepaid Expenses: Production | (445,840) | - |
| 104 | Prepaid Expenses: Transmission | (1,849,743) | - |
| 105 | Prepaid Expenses: Transmission (incremental FERC Rates) | - | - |
| 106 | Prepaid Expenses: Distribution | (135,016) | - |
| 107 | Prepaid Expenses: Renewables | - | - |
| 108 | Regulatory Assets - 2024 Rate Change | (501,094) | 20,453 |
| 109 | Regulatory Assets - 2025 Rate Change | (358,685) | 8,540 |
| 110 | Regulatory Assets - SJGS Obsolete Inventory | (1,409,643) | 5,329 |
| 111 | Regulatory Liabilities - Earnings Test | - | - |
| 112 | Regulatory Assets - PVNGS Lease costs | (5,072) | - |
| 113 | Regulatory Assets - PVNGS Undepreciated Investment | (10,008,448) | 48,942 |
| 114 | Regulatory Assets - ETC Over/Under SPE | - | - |
| 115 | Regulatory Assets - PVNGS Replacement Resources | (448,632) | 2,194 |
| 116 | Regulatory Assets - Rate Rider 12 UG Rate | - | - |
| 117 | Regulatory Assets - Renewable Rider Curr Reg | - | - |
| 118 | Regulatory Assets - SJ Energy Transition Property (SPE) | (81,040,317) | 273,415 |
| 119 | Regulatory Liabilities - Curr Reg Liab-UG Rate Rider 12 | - | - |
| 120 | Regulatory Liabilities - ITC Sandia | 7,087,254 | - |
| 121 | Regulatory Liabilities - ITC Sunbelt | - | - |
| 122 | Regulatory Liabilities - ITC - Distribution Battery Phase 2 | - | - |
| 123 | Regulatory Liabilities - Energy Transition Cost True Up | 289,575 | (1,114) |
| 124 | Regulatory Liabilities - SJGS Retirements Rate Credit | 23,805 | - |
| 125 | Regulatory Liabilities - PVNGS Lease Costs | - | - |
| 126 | Deferred Debits - WS-Transmission Revenue | - | - |
| 127 | Customer Advance | - | - |
| 128 | Deferred Credits - ETA | - | - |
| 129 | Other Liabilities - ETA Coal Mine Severance | - | - |
| 130 | Other Liabilities - ETA State Agency Payments | - | - |
| 131 | SJGS County Ordinance Decommission | - | - |
| 132 | | | |
| 133 | **Total Accumulated Deferred Income Taxes** | (833,315,809) | (565,080) |
| 134 | | | |
| 135 | General Ledger ADIT Balance | | |
| 136 | | | |
| 137 | Difference (Rounding) | | |

| | A | BD | BE |
|---|---|---|---|
| 1 | **Public Service Company of New Mexico** | | |
| 2 | **Schedule H-12** | | |
| 3 | **Accumulated Tax Deferrals** | | |
| 4 | **Base Period Ending 6/30/2026** | | |
| 5 | **Test Period Ending 9/30/2028** | | |
| 6 | **This schedule is sponsored by PNM Witness Morris** | | |
| 7 | | | |
| 8 | | | |
| 9 | | **31-Jan-27** | |
| 10 | | **Balance** | **Activity** |
| 11 | **Accumulated Deferred Income Taxes** | | |
| 12 | Federal Tax Credit Carryforward | 21,743,653 | - |
| 13 | Federal Tax Credit Carryforward - Renewables | - | - |
| 14 | Net Operating Loss (NOL) | 53,415,338 | - |
| 15 | Incentive Pay Plans | - | - |
| 16 | Regulatory Assets - Coal Mine Decommissioning | - | - |
| 17 | Regulatory Liabilities - Renewable Rider | - | - |
| 18 | Income Tax Regulatory Liability | 63,802,967 | 1,950,139 |
| 19 | Income Tax Regulatory Asset | (65,518,006) | - |
| 20 | Investment Tax Credit 2024 | 7,393,757 | - |
| 21 | Investment Tax Credit - Sandia | - | - |
| 22 | Investment Tax Credit - Sunbelt | - | - |
| 23 | Investment Tax Credit - Distribution Battery Phase 2 | - | - |
| 24 | Lease Liability | - | - |
| 25 | Deferred Credits - Coal Mine Decommissioning | - | - |
| 26 | Regulatory Assets - ETA Carrying Charges | - | - |
| 27 | Regulatory Assets - ETA Job Training & Severance | - | - |
| 28 | Regulatory Assets - ETA Payments to State Agencies | - | - |
| 29 | Regulatory Assets - ETA SJGS Plant Decommissioning | - | - |
| 30 | Regulatory Assets - ETA SJGS upfront Financing Cost | - | - |
| 31 | Regulatory Assets - ETA Westmoreland Coal Mine Sev | - | - |
| 32 | Deferred Credits - Joint Use | 134,870 | (3,549) |
| 33 | Deferred Credits - Pathnet | 1,385,940 | (1,801) |
| 34 | Deferred Credits - PVNGS Dry Casks | - | - |
| 35 | Other Deferred Credits | - | - |
| 36 | Other Liabilities - ETA Job Training and Severance | - | - |
| 37 | Other Liabilities - Navajo Workforce Training | - | - |
| 38 | Other Liabilities | - | - |
| 39 | Blackstone Transaction Costs | - | - |
| 40 | Injury and Damages | 2,058,181 | - |
| 41 | Plant - AFUDC | (41,057,609) | (352,192) |
| 42 | Plant - Capitalized Interest | 17,607,447 | - |
| 43 | Decommissioning and Reclamation Trusts | - | - |
| 44 | ASC 740-10 (FIN 48) Reclassifications | - | - |
| 45 | Estimated Tax Rate Adjustment | - | - |
| 46 | PVNGS Licensing | 3,093 | (281) |
| 47 | Plant - 263A Adjustment | (80,078,392) | - |
| 48 | Deferred State Taxes | - | - |
| 49 | Plant - CIAC | 26,503,887 | - |
| 50 | Plant - Depreciation Nuclear Fuel | 8,686,371 | 29,970 |
| 51 | Plant - Removal Cost | (4,446,299) | - |
| 52 | Plant - Repairs | (168,585,120) | (1,520,126) |
| 53 | Plant - Section 174 Deduction | 7,509,732 | - |
| 54 | Plant - Asset Retirement Obligation | 9,906,772 | 45,713 |

| | A | BD | BE |
|---|---|---|---|
| 1 | **Public Service Company of New Mexico** | | |
| 2 | **Schedule H-12** | | |
| 3 | **Accumulated Tax Deferrals** | | |
| 4 | **Base Period Ending 6/30/2026** | | |
| 5 | **Test Period Ending 9/30/2028** | | |
| 6 | **This schedule is sponsored by PNM Witness Morris** | | |
| 7 | | | |
| 8 | | | |
| 9 | | **31-Jan-27** | |
| 10 | | **Balance** | **Activity** |
| 55 | Plant - Pollution Control Property | (2,154,701) | - |
| 56 | Plant - Liberalized Depreciation: Production | (153,791,197) | 866,592 |
| 57 | Plant - Liberalized Depreciation: Transmission | (147,678,763) | 608,121 |
| 58 | Plant - Liberalized Depreciation: Distribution | (164,918,760) | (2,510,110) |
| 59 | Plant - Liberalized Depreciation: General and Intangible | (17,231,125) | 542,491 |
| 60 | Plant - Liberalized Depreciation: Grid Mod | (4,806,243) | (569,021) |
| 61 | Plant - Liberalized Depreciation: Renewables | (48,261,281) | 181,594 |
| 62 | Plant - Four Corners Imprudence | - | - |
| 63 | Regulatory Assets - SJGS Stranded Costs Units 2&3 | (17,537,775) | 132,862 |
| 64 | Pension | (38,544,816) | 90,669 |
| 65 | Retiree Medical | - | - |
| 66 | Lease Asset | - | - |
| 67 | Loss on Reacquired Debt | (933,947) | 8,293 |
| 68 | Other Comprehensive Income (OCI) | - | - |
| 69 | Deferred Credits - SO2 Allowance | - | - |
| 70 | Deferred Debits - Rate Case Expense | - | - |
| 71 | Deferred Debits - Decoupling | - | - |
| 72 | Deferred Debits - Grid Modernization | - | - |
| 73 | Deferred Debits - RR Underground Rider | - | - |
| 74 | Energy Storage Agreement | (3,677,384) | (354,375) |
| 75 | Energy Transition Charges | - | - |
| 76 | Prepaid Expenses | (1,168,330) | - |
| 77 | Regulatory Assets - 2024 COVID Bad Debt | - | - |
| 78 | Regulatory Assets - COVID-19 Costs | (234,590) | 22,874 |
| 79 | Regulatory Assets - Community Solar | (902,756) | - |
| 80 | Regulatory assets - FAC | 0 | - |
| 81 | Regulatory Assets - EDAM Costs | (375,174) | (51,476) |
| 82 | Regulatory Assets - EIM Costs | (1,869,362) | 79,547 |
| 83 | Regulatory Assets - Energy Efficiency | (129,051) | - |
| 84 | Regulatory Assets - ETA | - | - |
| 85 | Regulatory Assets - FERC 893 Cyber | - | - |
| 86 | Regulatory Assets - IRP | (45,483) | - |
| 87 | Regulatory Assets - Sky Blue Under Recovery | - | - |
| 88 | Regulatory Assets - Renewable Energy | 2,775,789 | (24,267) |
| 89 | Regulatory Assets - Renewable Energy Credits | (78,530) | - |
| 90 | Regulatory Assets - SJGS External Legal Fees | (110,396) | 419 |
| 91 | Regulatory Assets - SJGS Final ETA Depcom | - | - |
| 92 | Regulatory Assets - SJGS Final ETA Mine Rec | - | - |
| 93 | Regulatory Assets - SJGS Replacement Resources | (1,855,838) | 7,043 |
| 94 | Regulatory Assets - SJGS Undepreciated Investment | - | - |
| 95 | Regulatory Assets - SJGS Underground Coal Mine | - | - |
| 96 | Regulatory Assets - Solar Direct Regulatory Assets | - | - |
| 97 | Regulatory Assets - TOD Rate Pilot Program | (784,797) | - |
| 98 | Regulatory Assets - Transportation Electrification | - | - |

| | A | BD | BE |
|---|---|---|---|
| 1 | **Public Service Company of New Mexico** | | |
| 2 | **Schedule H-12** | | |
| 3 | **Accumulated Tax Deferrals** | | |
| 4 | **Base Period Ending 6/30/2026** | | |
| 5 | **Test Period Ending 9/30/2028** | | |
| 6 | **This schedule is sponsored by PNM Witness Morris** | | |
| 7 | | | |
| 8 | | | |
| 9 | | **31-Jan-27** | |
| 10 | | **Balance** | **Activity** |
| 99 | Regulatory Assets - WCC Transaction Costs | - | - |
| 100 | Regulatory Liabilities - Energy Efficiency | - | - |
| 101 | Regulatory Liabilities - FAC | - | - |
| 102 | Regulatory Assets - PCB Refinancing Hedge | (1,588,867) | 17,874 |
| 103 | Prepaid Expenses: Production | (445,840) | - |
| 104 | Prepaid Expenses: Transmission | (1,849,743) | - |
| 105 | Prepaid Expenses: Transmission (incremental FERC Rates) | - | - |
| 106 | Prepaid Expenses: Distribution | (135,016) | - |
| 107 | Prepaid Expenses: Renewables | - | - |
| 108 | Regulatory Assets - 2024 Rate Change | (480,641) | 20,453 |
| 109 | Regulatory Assets - 2025 Rate Change | (350,144) | 8,540 |
| 110 | Regulatory Assets - SJGS Obsolete Inventory | (1,404,314) | 5,329 |
| 111 | Regulatory Liabilities - Earnings Test | - | - |
| 112 | Regulatory Assets - PVNGS Lease costs | (5,072) | - |
| 113 | Regulatory Assets - PVNGS Undepreciated Investment | (9,959,506) | 48,942 |
| 114 | Regulatory Assets - ETC Over/Under SPE | - | - |
| 115 | Regulatory Assets - PVNGS Replacement Resources | (446,438) | 2,194 |
| 116 | Regulatory Assets - Rate Rider 12 UG Rate | - | - |
| 117 | Regulatory Assets - Renewable Rider Curr Reg | - | - |
| 118 | Regulatory Assets - SJ Energy Transition Property (SPE) | (80,766,901) | 273,415 |
| 119 | Regulatory Liabilities - Curr Reg Liab-UG Rate Rider 12 | - | - |
| 120 | Regulatory Liabilities - ITC Sandia | 7,087,254 | - |
| 121 | Regulatory Liabilities - ITC Sunbelt | - | - |
| 122 | Regulatory Liabilities - ITC - Distribution Battery Phase 2 | - | - |
| 123 | Regulatory Liabilities - Energy Transition Cost True Up | 288,461 | (1,114) |
| 124 | Regulatory Liabilities - SJGS Retirements Rate Credit | 23,805 | - |
| 125 | Regulatory Liabilities - PVNGS Lease Costs | - | - |
| 126 | Deferred Debits - WS-Transmission Revenue | - | - |
| 127 | Customer Advance | - | - |
| 128 | Deferred Credits - ETA | - | - |
| 129 | Other Liabilities - ETA Coal Mine Severance | - | - |
| 130 | Other Liabilities - ETA State Agency Payments | - | - |
| 131 | SJGS County Ordinance Decommission | - | - |
| 132 | | | |
| 133 | **Total Accumulated Deferred Income Taxes** | (833,880,890) | (445,238) |
| 134 | | | |
| 135 | General Ledger ADIT Balance | | |
| 136 | | | |
| 137 | Difference (Rounding) | | |

| | A | BF | BG |
|---|---|---|---|
| 1 | **Public Service Company of New Mexico** | | |
| 2 | **Schedule H-12** | | |
| 3 | **Accumulated Tax Deferrals** | | |
| 4 | **Base Period Ending 6/30/2026** | | |
| 5 | **Test Period Ending 9/30/2028** | | |
| 6 | **This schedule is sponsored by PNM Witness Morris** | | |
| 7 | | | |
| 8 | | | |
| 9 | | **28-Feb-27** | |
| 10 | | **Balance** | **Activity** |
| 11 | **Accumulated Deferred Income Taxes** | | |
| 12 | Federal Tax Credit Carryforward | 21,743,653 | - |
| 13 | Federal Tax Credit Carryforward - Renewables | - | - |
| 14 | Net Operating Loss (NOL) | 53,415,338 | - |
| 15 | Incentive Pay Plans | - | - |
| 16 | Regulatory Assets - Coal Mine Decommissioning | - | - |
| 17 | Regulatory Liabilities - Renewable Rider | - | - |
| 18 | Income Tax Regulatory Liability | 65,753,106 | 1,950,139 |
| 19 | Income Tax Regulatory Asset | (65,518,006) | - |
| 20 | Investment Tax Credit 2024 | 7,393,757 | - |
| 21 | Investment Tax Credit - Sandia | - | - |
| 22 | Investment Tax Credit - Sunbelt | - | - |
| 23 | Investment Tax Credit - Distribution Battery Phase 2 | - | - |
| 24 | Lease Liability | - | - |
| 25 | Deferred Credits - Coal Mine Decommissioning | - | - |
| 26 | Regulatory Assets - ETA Carrying Charges | - | - |
| 27 | Regulatory Assets - ETA Job Training & Severance | - | - |
| 28 | Regulatory Assets - ETA Payments to State Agencies | - | - |
| 29 | Regulatory Assets - ETA SJGS Plant Decommissioning | - | - |
| 30 | Regulatory Assets - ETA SJGS upfront Financing Cost | - | - |
| 31 | Regulatory Assets - ETA Westmoreland Coal Mine Sev | - | - |
| 32 | Deferred Credits - Joint Use | 131,321 | (3,549) |
| 33 | Deferred Credits - Pathnet | 1,384,139 | (1,801) |
| 34 | Deferred Credits - PVNGS Dry Casks | - | - |
| 35 | Other Deferred Credits | - | - |
| 36 | Other Liabilities - ETA Job Training and Severance | - | - |
| 37 | Other Liabilities - Navajo Workforce Training | - | - |
| 38 | Other Liabilities | - | - |
| 39 | Blackstone Transaction Costs | - | - |
| 40 | Injury and Damages | 2,058,181 | - |
| 41 | Plant - AFUDC | (41,409,801) | (390,226) |
| 42 | Plant - Capitalized Interest | 17,607,447 | - |
| 43 | Decommissioning and Reclamation Trusts | - | - |
| 44 | ASC 740-10 (FIN 48) Reclassifications | - | - |
| 45 | Estimated Tax Rate Adjustment | - | - |
| 46 | PVNGS Licensing | 2,812 | (281) |
| 47 | Plant - 263A Adjustment | (80,078,392) | - |
| 48 | Deferred State Taxes | - | - |
| 49 | Plant - CIAC | 26,503,887 | - |
| 50 | Plant - Depreciation Nuclear Fuel | 8,716,342 | 286,417 |
| 51 | Plant - Removal Cost | (4,446,299) | - |
| 52 | Plant - Repairs | (170,105,245) | (1,273,762) |
| 53 | Plant - Section 174 Deduction | 7,509,732 | - |
| 54 | Plant - Asset Retirement Obligation | 9,952,486 | 45,954 |

| | A | BF | BG |
|---|---|---|---|
| 1 | **Public Service Company of New Mexico** | | |
| 2 | **Schedule H-12** | | |
| 3 | **Accumulated Tax Deferrals** | | |
| 4 | **Base Period Ending 6/30/2026** | | |
| 5 | **Test Period Ending 9/30/2028** | | |
| 6 | **This schedule is sponsored by PNM Witness Morris** | | |
| 7 | | | |
| 8 | | | |
| 9 | | **28-Feb-27** | |
| 10 | | **Balance** | **Activity** |
| 55 | Plant - Pollution Control Property | (2,154,701) | - |
| 56 | Plant - Liberalized Depreciation: Production | (152,924,605) | 559,673 |
| 57 | Plant - Liberalized Depreciation: Transmission | (147,070,643) | 330,238 |
| 58 | Plant - Liberalized Depreciation: Distribution | (167,428,870) | (1,780,847) |
| 59 | Plant - Liberalized Depreciation: General and Intangible | (16,688,634) | 605,239 |
| 60 | Plant - Liberalized Depreciation: Grid Mod | (5,375,264) | (692,286) |
| 61 | Plant - Liberalized Depreciation: Renewables | (48,079,687) | 179,320 |
| 62 | Plant - Four Corners Imprudence | - | - |
| 63 | Regulatory Assets - SJGS Stranded Costs Units 2&3 | (17,404,914) | 132,862 |
| 64 | Pension | (38,454,147) | 90,669 |
| 65 | Retiree Medical | - | - |
| 66 | Lease Asset | - | - |
| 67 | Loss on Reacquired Debt | (925,654) | 8,293 |
| 68 | Other Comprehensive Income (OCI) | - | - |
| 69 | Deferred Credits - SO2 Allowance | - | - |
| 70 | Deferred Debits - Rate Case Expense | - | - |
| 71 | Deferred Debits - Decoupling | - | - |
| 72 | Deferred Debits - Grid Modernization | - | - |
| 73 | Deferred Debits - RR Underground Rider | - | - |
| 74 | Energy Storage Agreement | (4,031,759) | (573,777) |
| 75 | Energy Transition Charges | - | - |
| 76 | Prepaid Expenses | (1,168,330) | - |
| 77 | Regulatory Assets - 2024 COVID Bad Debt | - | - |
| 78 | Regulatory Assets - COVID-19 Costs | (211,716) | 22,874 |
| 79 | Regulatory Assets - Community Solar | (902,756) | - |
| 80 | Regulatory assets - FAC | 0 | - |
| 81 | Regulatory Assets - EDAM Costs | (426,649) | (51,476) |
| 82 | Regulatory Assets - EIM Costs | (1,789,814) | 79,547 |
| 83 | Regulatory Assets - Energy Efficiency | (129,051) | - |
| 84 | Regulatory Assets - ETA | - | - |
| 85 | Regulatory Assets - FERC 893 Cyber | - | - |
| 86 | Regulatory Assets - IRP | (45,483) | - |
| 87 | Regulatory Assets - Sky Blue Under Recovery | - | - |
| 88 | Regulatory Assets - Renewable Energy | 2,751,522 | (24,267) |
| 89 | Regulatory Assets - Renewable Energy Credits | (78,530) | - |
| 90 | Regulatory Assets - SJGS External Legal Fees | (109,977) | 419 |
| 91 | Regulatory Assets - SJGS Final ETA Depcom | - | - |
| 92 | Regulatory Assets - SJGS Final ETA Mine Rec | - | - |
| 93 | Regulatory Assets - SJGS Replacement Resources | (1,848,795) | 7,043 |
| 94 | Regulatory Assets - SJGS Undepreciated Investment | - | - |
| 95 | Regulatory Assets - SJGS Underground Coal Mine | - | - |
| 96 | Regulatory Assets - Solar Direct Regulatory Assets | - | - |
| 97 | Regulatory Assets - TOD Rate Pilot Program | (784,797) | - |
| 98 | Regulatory Assets - Transportation Electrification | - | - |

| | A | BF | BG |
|---|---|---|---|
| 1 | **Public Service Company of New Mexico** | | |
| 2 | **Schedule H-12** | | |
| 3 | **Accumulated Tax Deferrals** | | |
| 4 | **Base Period Ending 6/30/2026** | | |
| 5 | **Test Period Ending 9/30/2028** | | |
| 6 | **This schedule is sponsored by PNM Witness Morris** | | |
| 7 | | | |
| 8 | | | |
| 9 | | **28-Feb-27** | |
| 10 | | **Balance** | **Activity** |
| 99 | Regulatory Assets - WCC Transaction Costs | - | - |
| 100 | Regulatory Liabilities - Energy Efficiency | - | - |
| 101 | Regulatory Liabilities - FAC | - | - |
| 102 | Regulatory Assets - PCB Refinancing Hedge | (1,570,993) | 17,874 |
| 103 | Prepaid Expenses: Production | (445,840) | - |
| 104 | Prepaid Expenses: Transmission | (1,849,743) | - |
| 105 | Prepaid Expenses: Transmission (incremental FERC Rates) | - | - |
| 106 | Prepaid Expenses: Distribution | (135,016) | - |
| 107 | Prepaid Expenses: Renewables | - | - |
| 108 | Regulatory Assets - 2024 Rate Change | (460,188) | 20,453 |
| 109 | Regulatory Assets - 2025 Rate Change | (341,604) | 8,540 |
| 110 | Regulatory Assets - SJGS Obsolete Inventory | (1,398,984) | 5,329 |
| 111 | Regulatory Liabilities - Earnings Test | - | - |
| 112 | Regulatory Assets - PVNGS Lease costs | (5,072) | - |
| 113 | Regulatory Assets - PVNGS Undepreciated Investment | (9,910,564) | 48,942 |
| 114 | Regulatory Assets - ETC Over/Under SPE | - | - |
| 115 | Regulatory Assets - PVNGS Replacement Resources | (444,244) | 2,194 |
| 116 | Regulatory Assets - Rate Rider 12 UG Rate | - | - |
| 117 | Regulatory Assets - Renewable Rider Curr Reg | - | - |
| 118 | Regulatory Assets - SJ Energy Transition Property (SPE) | (80,493,486) | 273,415 |
| 119 | Regulatory Liabilities - Curr Reg Liab-UG Rate Rider 12 | - | - |
| 120 | Regulatory Liabilities - ITC Sandia | 7,087,254 | - |
| 121 | Regulatory Liabilities - ITC Sunbelt | - | - |
| 122 | Regulatory Liabilities - ITC - Distribution Battery Phase 2 | - | - |
| 123 | Regulatory Liabilities - Energy Transition Cost True Up | 287,347 | (1,114) |
| 124 | Regulatory Liabilities - SJGS Retirements Rate Credit | 23,805 | - |
| 125 | Regulatory Liabilities - PVNGS Lease Costs | - | - |
| 126 | Deferred Debits - WS-Transmission Revenue | - | - |
| 127 | Customer Advance | - | - |
| 128 | Deferred Credits - ETA | - | - |
| 129 | Other Liabilities - ETA Coal Mine Severance | - | - |
| 130 | Other Liabilities - ETA State Agency Payments | - | - |
| 131 | SJGS County Ordinance Decommission | - | - |
| 132 | | | |
| 133 | **Total Accumulated Deferred Income Taxes** | (834,326,128) | (117,952) |
| 134 | | | |
| 135 | General Ledger ADIT Balance | | |
| 136 | | | |
| 137 | Difference (Rounding) | | |

| | A | BH | BI |
|---|---|---|---|
| 1 | **Public Service Company of New Mexico** | | |
| 2 | **Schedule H-12** | | |
| 3 | **Accumulated Tax Deferrals** | | |
| 4 | **Base Period Ending 6/30/2026** | | |
| 5 | **Test Period Ending 9/30/2028** | | |
| 6 | **This schedule is sponsored by PNM Witness Morris** | | |
| 7 | | | |
| 8 | | | |
| 9 | | **31-Mar-27** | |
| 10 | | **Balance** | **Activity** |
| 11 | **Accumulated Deferred Income Taxes** | | |
| 12 | Federal Tax Credit Carryforward | 21,743,653 | - |
| 13 | Federal Tax Credit Carryforward - Renewables | - | - |
| 14 | Net Operating Loss (NOL) | 53,415,338 | - |
| 15 | Incentive Pay Plans | - | - |
| 16 | Regulatory Assets - Coal Mine Decommissioning | - | - |
| 17 | Regulatory Liabilities - Renewable Rider | - | - |
| 18 | Income Tax Regulatory Liability | 67,703,245 | 1,950,139 |
| 19 | Income Tax Regulatory Asset | (65,518,006) | - |
| 20 | Investment Tax Credit 2024 | 7,393,757 | - |
| 21 | Investment Tax Credit - Sandia | - | - |
| 22 | Investment Tax Credit - Sunbelt | - | - |
| 23 | Investment Tax Credit - Distribution Battery Phase 2 | - | - |
| 24 | Lease Liability | - | - |
| 25 | Deferred Credits - Coal Mine Decommissioning | - | - |
| 26 | Regulatory Assets - ETA Carrying Charges | - | - |
| 27 | Regulatory Assets - ETA Job Training & Severance | - | - |
| 28 | Regulatory Assets - ETA Payments to State Agencies | - | - |
| 29 | Regulatory Assets - ETA SJGS Plant Decommissioning | - | - |
| 30 | Regulatory Assets - ETA SJGS upfront Financing Cost | - | - |
| 31 | Regulatory Assets - ETA Westmoreland Coal Mine Sev | - | - |
| 32 | Deferred Credits - Joint Use | 127,772 | (3,549) |
| 33 | Deferred Credits - Pathnet | 1,382,338 | (1,801) |
| 34 | Deferred Credits - PVNGS Dry Casks | - | - |
| 35 | Other Deferred Credits | - | - |
| 36 | Other Liabilities - ETA Job Training and Severance | - | - |
| 37 | Other Liabilities - Navajo Workforce Training | - | - |
| 38 | Other Liabilities | - | - |
| 39 | Blackstone Transaction Costs | - | - |
| 40 | Injury and Damages | 2,058,181 | - |
| 41 | Plant - AFUDC | (41,800,027) | (417,422) |
| 42 | Plant - Capitalized Interest | 17,607,447 | - |
| 43 | Decommissioning and Reclamation Trusts | - | - |
| 44 | ASC 740-10 (FIN 48) Reclassifications | - | - |
| 45 | Estimated Tax Rate Adjustment | - | - |
| 46 | PVNGS Licensing | 2,531 | (281) |
| 47 | Plant - 263A Adjustment | (80,078,392) | - |
| 48 | Deferred State Taxes | - | - |
| 49 | Plant - CIAC | 26,503,887 | - |
| 50 | Plant - Depreciation Nuclear Fuel | 9,002,759 | (1,925,728) |
| 51 | Plant - Removal Cost | (4,446,299) | - |
| 52 | Plant - Repairs | (171,379,008) | (5,291,595) |
| 53 | Plant - Section 174 Deduction | 7,509,732 | - |
| 54 | Plant - Asset Retirement Obligation | 9,998,439 | 46,196 |

| | A | BH | BI |
|---|---|---|---|
| 1 | **Public Service Company of New Mexico** | | |
| 2 | **Schedule H-12** | | |
| 3 | **Accumulated Tax Deferrals** | | |
| 4 | **Base Period Ending 6/30/2026** | | |
| 5 | **Test Period Ending 9/30/2028** | | |
| 6 | **This schedule is sponsored by PNM Witness Morris** | | |
| 7 | | | |
| 8 | | | |
| 9 | | **31-Mar-27** | |
| 10 | | **Balance** | **Activity** |
| 55 | Plant - Pollution Control Property | (2,154,701) | - |
| 56 | Plant - Liberalized Depreciation: Production | (152,364,932) | 1,060,112 |
| 57 | Plant - Liberalized Depreciation: Transmission | (146,740,404) | 706,979 |
| 58 | Plant - Liberalized Depreciation: Distribution | (169,209,717) | 433,442 |
| 59 | Plant - Liberalized Depreciation: General and Intangible | (16,083,395) | 566,631 |
| 60 | Plant - Liberalized Depreciation: Grid Mod | (6,067,550) | (3,699,949) |
| 61 | Plant - Liberalized Depreciation: Renewables | (47,900,368) | 167,041 |
| 62 | Plant - Four Corners Imprudence | - | - |
| 63 | Regulatory Assets - SJGS Stranded Costs Units 2&3 | (17,272,052) | 132,862 |
| 64 | Pension | (38,363,478) | 90,669 |
| 65 | Retiree Medical | - | - |
| 66 | Lease Asset | - | - |
| 67 | Loss on Reacquired Debt | (917,361) | 8,293 |
| 68 | Other Comprehensive Income (OCI) | - | - |
| 69 | Deferred Credits - SO2 Allowance | - | - |
| 70 | Deferred Debits - Rate Case Expense | - | - |
| 71 | Deferred Debits - Decoupling | - | - |
| 72 | Deferred Debits - Grid Modernization | - | - |
| 73 | Deferred Debits - RR Underground Rider | - | - |
| 74 | Energy Storage Agreement | (4,605,536) | (470,118) |
| 75 | Energy Transition Charges | - | - |
| 76 | Prepaid Expenses | (1,168,330) | - |
| 77 | Regulatory Assets - 2024 COVID Bad Debt | - | - |
| 78 | Regulatory Assets - COVID-19 Costs | (188,842) | 22,874 |
| 79 | Regulatory Assets - Community Solar | (902,756) | - |
| 80 | Regulatory assets - FAC | 0 | - |
| 81 | Regulatory Assets - EDAM Costs | (478,125) | (51,476) |
| 82 | Regulatory Assets - EIM Costs | (1,710,267) | 79,547 |
| 83 | Regulatory Assets - Energy Efficiency | (129,051) | - |
| 84 | Regulatory Assets - ETA | - | - |
| 85 | Regulatory Assets - FERC 893 Cyber | - | - |
| 86 | Regulatory Assets - IRP | (45,483) | - |
| 87 | Regulatory Assets - Sky Blue Under Recovery | - | - |
| 88 | Regulatory Assets - Renewable Energy | 2,727,255 | (24,267) |
| 89 | Regulatory Assets - Renewable Energy Credits | (78,530) | - |
| 90 | Regulatory Assets - SJGS External Legal Fees | (109,558) | 419 |
| 91 | Regulatory Assets - SJGS Final ETA Depcom | - | - |
| 92 | Regulatory Assets - SJGS Final ETA Mine Rec | - | - |
| 93 | Regulatory Assets - SJGS Replacement Resources | (1,841,752) | 7,043 |
| 94 | Regulatory Assets - SJGS Undepreciated Investment | - | - |
| 95 | Regulatory Assets - SJGS Underground Coal Mine | - | - |
| 96 | Regulatory Assets - Solar Direct Regulatory Assets | - | - |
| 97 | Regulatory Assets - TOD Rate Pilot Program | (784,797) | - |
| 98 | Regulatory Assets - Transportation Electrification | - | - |

| | A | BH | BI |
|---|---|---|---|
| 1 | **Public Service Company of New Mexico** | | |
| 2 | **Schedule H-12** | | |
| 3 | **Accumulated Tax Deferrals** | | |
| 4 | **Base Period Ending 6/30/2026** | | |
| 5 | **Test Period Ending 9/30/2028** | | |
| 6 | **This schedule is sponsored by PNM Witness Morris** | | |
| 7 | | | |
| 8 | | | |
| 9 | | **31-Mar-27** | |
| 10 | | **Balance** | **Activity** |
| 99 | Regulatory Assets - WCC Transaction Costs | - | - |
| 100 | Regulatory Liabilities - Energy Efficiency | - | - |
| 101 | Regulatory Liabilities - FAC | - | - |
| 102 | Regulatory Assets - PCB Refinancing Hedge | (1,553,119) | 17,874 |
| 103 | Prepaid Expenses: Production | (445,840) | - |
| 104 | Prepaid Expenses: Transmission | (1,849,743) | - |
| 105 | Prepaid Expenses: Transmission (incremental FERC Rates) | - | - |
| 106 | Prepaid Expenses: Distribution | (135,016) | - |
| 107 | Prepaid Expenses: Renewables | - | - |
| 108 | Regulatory Assets - 2024 Rate Change | (439,735) | 20,453 |
| 109 | Regulatory Assets - 2025 Rate Change | (333,064) | 8,540 |
| 110 | Regulatory Assets - SJGS Obsolete Inventory | (1,393,655) | 5,329 |
| 111 | Regulatory Liabilities - Earnings Test | - | - |
| 112 | Regulatory Assets - PVNGS Lease costs | (5,072) | - |
| 113 | Regulatory Assets - PVNGS Undepreciated Investment | (9,861,622) | 48,942 |
| 114 | Regulatory Assets - ETC Over/Under SPE | - | - |
| 115 | Regulatory Assets - PVNGS Replacement Resources | (442,050) | 2,194 |
| 116 | Regulatory Assets - Rate Rider 12 UG Rate | - | - |
| 117 | Regulatory Assets - Renewable Rider Curr Reg | - | - |
| 118 | Regulatory Assets - SJ Energy Transition Property (SPE) | (80,220,071) | 273,415 |
| 119 | Regulatory Liabilities - Curr Reg Liab-UG Rate Rider 12 | - | - |
| 120 | Regulatory Liabilities - ITC Sandia | 7,087,254 | - |
| 121 | Regulatory Liabilities - ITC Sunbelt | - | - |
| 122 | Regulatory Liabilities - ITC - Distribution Battery Phase 2 | - | - |
| 123 | Regulatory Liabilities - Energy Transition Cost True Up | 286,234 | (1,114) |
| 124 | Regulatory Liabilities - SJGS Retirements Rate Credit | 23,805 | - |
| 125 | Regulatory Liabilities - PVNGS Lease Costs | - | - |
| 126 | Deferred Debits - WS-Transmission Revenue | - | - |
| 127 | Customer Advance | - | - |
| 128 | Deferred Credits - ETA | - | - |
| 129 | Other Liabilities - ETA Coal Mine Severance | - | - |
| 130 | Other Liabilities - ETA State Agency Payments | - | - |
| 131 | SJGS County Ordinance Decommission | - | - |
| 132 | | | |
| 133 | **Total Accumulated Deferred Income Taxes** | (834,444,079) | (6,238,309) |
| 134 | | | |
| 135 | General Ledger ADIT Balance | | |
| 136 | | | |
| 137 | Difference (Rounding) | | |

| | A | BJ | BK |
|---|---|---|---|
| 1 | **Public Service Company of New Mexico** | | |
| 2 | **Schedule H-12** | | |
| 3 | **Accumulated Tax Deferrals** | | |
| 4 | **Base Period Ending 6/30/2026** | | |
| 5 | **Test Period Ending 9/30/2028** | | |
| 6 | **This schedule is sponsored by PNM Witness Morris** | | |
| 7 | | | |
| 8 | | | |
| 9 | | **30-Apr-27** | |
| 10 | | **Balance** | **Activity** |
| 11 | **Accumulated Deferred Income Taxes** | | |
| 12 | Federal Tax Credit Carryforward | 21,743,653 | - |
| 13 | Federal Tax Credit Carryforward - Renewables | - | - |
| 14 | Net Operating Loss (NOL) | 53,415,338 | - |
| 15 | Incentive Pay Plans | - | - |
| 16 | Regulatory Assets - Coal Mine Decommissioning | - | - |
| 17 | Regulatory Liabilities - Renewable Rider | - | - |
| 18 | Income Tax Regulatory Liability | 69,653,384 | 1,950,139 |
| 19 | Income Tax Regulatory Asset | (65,518,006) | - |
| 20 | Investment Tax Credit 2024 | 7,393,757 | - |
| 21 | Investment Tax Credit - Sandia | - | - |
| 22 | Investment Tax Credit - Sunbelt | - | - |
| 23 | Investment Tax Credit - Distribution Battery Phase 2 | - | - |
| 24 | Lease Liability | - | - |
| 25 | Deferred Credits - Coal Mine Decommissioning | - | - |
| 26 | Regulatory Assets - ETA Carrying Charges | - | - |
| 27 | Regulatory Assets - ETA Job Training & Severance | - | - |
| 28 | Regulatory Assets - ETA Payments to State Agencies | - | - |
| 29 | Regulatory Assets - ETA SJGS Plant Decommissioning | - | - |
| 30 | Regulatory Assets - ETA SJGS upfront Financing Cost | - | - |
| 31 | Regulatory Assets - ETA Westmoreland Coal Mine Sev | - | - |
| 32 | Deferred Credits - Joint Use | 124,223 | (3,549) |
| 33 | Deferred Credits - Pathnet | 1,380,536 | (1,801) |
| 34 | Deferred Credits - PVNGS Dry Casks | - | - |
| 35 | Other Deferred Credits | - | - |
| 36 | Other Liabilities - ETA Job Training and Severance | - | - |
| 37 | Other Liabilities - Navajo Workforce Training | - | - |
| 38 | Other Liabilities | - | - |
| 39 | Blackstone Transaction Costs | - | - |
| 40 | Injury and Damages | 2,058,181 | - |
| 41 | Plant - AFUDC | (42,217,450) | (380,710) |
| 42 | Plant - Capitalized Interest | 17,607,447 | - |
| 43 | Decommissioning and Reclamation Trusts | - | - |
| 44 | ASC 740-10 (FIN 48) Reclassifications | - | - |
| 45 | Estimated Tax Rate Adjustment | - | - |
| 46 | PVNGS Licensing | 2,249 | (281) |
| 47 | Plant - 263A Adjustment | (80,078,392) | - |
| 48 | Deferred State Taxes | - | - |
| 49 | Plant - CIAC | 26,503,887 | - |
| 50 | Plant - Depreciation Nuclear Fuel | 7,077,031 | 2,571,535 |
| 51 | Plant - Removal Cost | (4,446,299) | - |
| 52 | Plant - Repairs | (176,670,603) | (3,019,373) |
| 53 | Plant - Section 174 Deduction | 7,509,732 | - |
| 54 | Plant - Asset Retirement Obligation | 10,044,635 | 46,439 |

| | A | BJ | BK |
|---|---|---|---|
| 1 | **Public Service Company of New Mexico** | | |
| 2 | **Schedule H-12** | | |
| 3 | **Accumulated Tax Deferrals** | | |
| 4 | **Base Period Ending 6/30/2026** | | |
| 5 | **Test Period Ending 9/30/2028** | | |
| 6 | **This schedule is sponsored by PNM Witness Morris** | | |
| 7 | | | |
| 8 | | | |
| 9 | | **30-Apr-27** | |
| 10 | | **Balance** | **Activity** |
| 55 | Plant - Pollution Control Property | (2,154,701) | - |
| 56 | Plant - Liberalized Depreciation: Production | (151,304,820) | 1,183,781 |
| 57 | Plant - Liberalized Depreciation: Transmission | (146,033,425) | (2,396,256) |
| 58 | Plant - Liberalized Depreciation: Distribution | (168,776,275) | 49,562 |
| 59 | Plant - Liberalized Depreciation: General and Intangible | (15,516,764) | 545,986 |
| 60 | Plant - Liberalized Depreciation: Grid Mod | (9,767,499) | (248,242) |
| 61 | Plant - Liberalized Depreciation: Renewables | (47,733,327) | 179,890 |
| 62 | Plant - Four Corners Imprudence | - | - |
| 63 | Regulatory Assets - SJGS Stranded Costs Units 2&3 | (17,139,190) | 132,862 |
| 64 | Pension | (38,272,810) | 90,669 |
| 65 | Retiree Medical | - | - |
| 66 | Lease Asset | - | - |
| 67 | Loss on Reacquired Debt | (909,068) | 8,293 |
| 68 | Other Comprehensive Income (OCI) | - | - |
| 69 | Deferred Credits - SO2 Allowance | - | - |
| 70 | Deferred Debits - Rate Case Expense | - | - |
| 71 | Deferred Debits - Decoupling | - | - |
| 72 | Deferred Debits - Grid Modernization | - | - |
| 73 | Deferred Debits - RR Underground Rider | - | - |
| 74 | Energy Storage Agreement | (5,075,654) | (572,132) |
| 75 | Energy Transition Charges | - | - |
| 76 | Prepaid Expenses | (1,168,330) | - |
| 77 | Regulatory Assets - 2024 COVID Bad Debt | - | - |
| 78 | Regulatory Assets - COVID-19 Costs | (165,969) | 22,874 |
| 79 | Regulatory Assets - Community Solar | (902,756) | - |
| 80 | Regulatory assets - FAC | 0 | - |
| 81 | Regulatory Assets - EDAM Costs | (529,601) | (51,476) |
| 82 | Regulatory Assets - EIM Costs | (1,630,720) | 79,547 |
| 83 | Regulatory Assets - Energy Efficiency | (129,051) | - |
| 84 | Regulatory Assets - ETA | - | - |
| 85 | Regulatory Assets - FERC 893 Cyber | - | - |
| 86 | Regulatory Assets - IRP | (45,483) | - |
| 87 | Regulatory Assets - Sky Blue Under Recovery | - | - |
| 88 | Regulatory Assets - Renewable Energy | 2,702,988 | (24,267) |
| 89 | Regulatory Assets - Renewable Energy Credits | (78,530) | - |
| 90 | Regulatory Assets - SJGS External Legal Fees | (109,139) | 419 |
| 91 | Regulatory Assets - SJGS Final ETA Depcom | - | - |
| 92 | Regulatory Assets - SJGS Final ETA Mine Rec | - | - |
| 93 | Regulatory Assets - SJGS Replacement Resources | (1,834,709) | 7,043 |
| 94 | Regulatory Assets - SJGS Undepreciated Investment | - | - |
| 95 | Regulatory Assets - SJGS Underground Coal Mine | - | - |
| 96 | Regulatory Assets - Solar Direct Regulatory Assets | - | - |
| 97 | Regulatory Assets - TOD Rate Pilot Program | (784,797) | - |
| 98 | Regulatory Assets - Transportation Electrification | - | - |

| | A | BJ | BK |
|---|---|---|---|
| 1 | **Public Service Company of New Mexico** | | |
| 2 | **Schedule H-12** | | |
| 3 | **Accumulated Tax Deferrals** | | |
| 4 | **Base Period Ending 6/30/2026** | | |
| 5 | **Test Period Ending 9/30/2028** | | |
| 6 | **This schedule is sponsored by PNM Witness Morris** | | |
| 7 | | | |
| 8 | | | |
| 9 | | **30-Apr-27** | |
| 10 | | **Balance** | **Activity** |
| 99 | Regulatory Assets - WCC Transaction Costs | - | - |
| 100 | Regulatory Liabilities - Energy Efficiency | - | - |
| 101 | Regulatory Liabilities - FAC | - | - |
| 102 | Regulatory Assets - PCB Refinancing Hedge | (1,535,245) | 17,874 |
| 103 | Prepaid Expenses: Production | (445,840) | - |
| 104 | Prepaid Expenses: Transmission | (1,849,743) | - |
| 105 | Prepaid Expenses: Transmission (incremental FERC Rates) | - | - |
| 106 | Prepaid Expenses: Distribution | (135,016) | - |
| 107 | Prepaid Expenses: Renewables | - | - |
| 108 | Regulatory Assets - 2024 Rate Change | (419,283) | 20,453 |
| 109 | Regulatory Assets - 2025 Rate Change | (324,524) | 8,540 |
| 110 | Regulatory Assets - SJGS Obsolete Inventory | (1,388,325) | 5,329 |
| 111 | Regulatory Liabilities - Earnings Test | - | - |
| 112 | Regulatory Assets - PVNGS Lease costs | (5,072) | - |
| 113 | Regulatory Assets - PVNGS Undepreciated Investment | (9,812,680) | 48,942 |
| 114 | Regulatory Assets - ETC Over/Under SPE | - | - |
| 115 | Regulatory Assets - PVNGS Replacement Resources | (439,856) | 2,194 |
| 116 | Regulatory Assets - Rate Rider 12 UG Rate | - | - |
| 117 | Regulatory Assets - Renewable Rider Curr Reg | - | - |
| 118 | Regulatory Assets - SJ Energy Transition Property (SPE) | (79,946,655) | 273,415 |
| 119 | Regulatory Liabilities - Curr Reg Liab-UG Rate Rider 12 | - | - |
| 120 | Regulatory Liabilities - ITC Sandia | 7,087,254 | - |
| 121 | Regulatory Liabilities - ITC Sunbelt | - | - |
| 122 | Regulatory Liabilities - ITC - Distribution Battery Phase 2 | - | - |
| 123 | Regulatory Liabilities - Energy Transition Cost True Up | 285,120 | (1,114) |
| 124 | Regulatory Liabilities - SJGS Retirements Rate Credit | 23,805 | - |
| 125 | Regulatory Liabilities - PVNGS Lease Costs | - | - |
| 126 | Deferred Debits - WS-Transmission Revenue | - | - |
| 127 | Customer Advance | - | - |
| 128 | Deferred Credits - ETA | - | - |
| 129 | Other Liabilities - ETA Coal Mine Severance | - | - |
| 130 | Other Liabilities - ETA State Agency Payments | - | - |
| 131 | SJGS County Ordinance Decommission | - | - |
| 132 | | | |
| 133 | **Total Accumulated Deferred Income Taxes** | (840,682,388) | 546,584 |
| 134 | | | |
| 135 | General Ledger ADIT Balance | | |
| 136 | | | |
| 137 | Difference (Rounding) | | |

| | A | BL | BM |
|---|---|---|---|
| 1 | **Public Service Company of New Mexico** | | |
| 2 | **Schedule H-12** | | |
| 3 | **Accumulated Tax Deferrals** | | |
| 4 | **Base Period Ending 6/30/2026** | | |
| 5 | **Test Period Ending 9/30/2028** | | |
| 6 | **This schedule is sponsored by PNM Witness Morris** | | |
| 7 | | | |
| 8 | | | |
| 9 | | **31-May-27** | |
| 10 | | **Balance** | **Activity** |
| 11 | **Accumulated Deferred Income Taxes** | | |
| 12 | Federal Tax Credit Carryforward | 21,743,653 | - |
| 13 | Federal Tax Credit Carryforward - Renewables | - | - |
| 14 | Net Operating Loss (NOL) | 53,415,338 | - |
| 15 | Incentive Pay Plans | - | - |
| 16 | Regulatory Assets - Coal Mine Decommissioning | - | - |
| 17 | Regulatory Liabilities - Renewable Rider | - | - |
| 18 | Income Tax Regulatory Liability | 71,603,523 | 1,950,139 |
| 19 | Income Tax Regulatory Asset | (65,518,006) | - |
| 20 | Investment Tax Credit 2024 | 7,393,757 | - |
| 21 | Investment Tax Credit - Sandia | - | - |
| 22 | Investment Tax Credit - Sunbelt | - | - |
| 23 | Investment Tax Credit - Distribution Battery Phase 2 | - | - |
| 24 | Lease Liability | - | - |
| 25 | Deferred Credits - Coal Mine Decommissioning | - | - |
| 26 | Regulatory Assets - ETA Carrying Charges | - | - |
| 27 | Regulatory Assets - ETA Job Training & Severance | - | - |
| 28 | Regulatory Assets - ETA Payments to State Agencies | - | - |
| 29 | Regulatory Assets - ETA SJGS Plant Decommissioning | - | - |
| 30 | Regulatory Assets - ETA SJGS upfront Financing Cost | - | - |
| 31 | Regulatory Assets - ETA Westmoreland Coal Mine Sev | - | - |
| 32 | Deferred Credits - Joint Use | 120,673 | (3,549) |
| 33 | Deferred Credits - Pathnet | 1,378,735 | (1,801) |
| 34 | Deferred Credits - PVNGS Dry Casks | - | - |
| 35 | Other Deferred Credits | - | - |
| 36 | Other Liabilities - ETA Job Training and Severance | - | - |
| 37 | Other Liabilities - Navajo Workforce Training | - | - |
| 38 | Other Liabilities | - | - |
| 39 | Blackstone Transaction Costs | - | - |
| 40 | Injury and Damages | 2,058,181 | - |
| 41 | Plant - AFUDC | (42,598,160) | (393,583) |
| 42 | Plant - Capitalized Interest | 17,607,447 | - |
| 43 | Decommissioning and Reclamation Trusts | - | - |
| 44 | ASC 740-10 (FIN 48) Reclassifications | - | - |
| 45 | Estimated Tax Rate Adjustment | - | - |
| 46 | PVNGS Licensing | 1,968 | (281) |
| 47 | Plant - 263A Adjustment | (80,078,392) | - |
| 48 | Deferred State Taxes | - | - |
| 49 | Plant - CIAC | 26,503,887 | - |
| 50 | Plant - Depreciation Nuclear Fuel | 9,648,566 | 33,733 |
| 51 | Plant - Removal Cost | (4,446,299) | - |
| 52 | Plant - Repairs | (179,689,976) | (1,751,654) |
| 53 | Plant - Section 174 Deduction | 7,509,732 | - |
| 54 | Plant - Asset Retirement Obligation | 10,091,074 | 46,683 |

| | A | BL | BM |
|---|---|---|---|
| 1 | **Public Service Company of New Mexico** | | |
| 2 | **Schedule H-12** | | |
| 3 | **Accumulated Tax Deferrals** | | |
| 4 | **Base Period Ending 6/30/2026** | | |
| 5 | **Test Period Ending 9/30/2028** | | |
| 6 | **This schedule is sponsored by PNM Witness Morris** | | |
| 7 | | | |
| 8 | | | |
| 9 | | **31-May-27** | |
| 10 | | **Balance** | **Activity** |
| 55 | Plant - Pollution Control Property | (2,154,701) | - |
| 56 | Plant - Liberalized Depreciation: Production | (150,121,040) | 710,584 |
| 57 | Plant - Liberalized Depreciation: Transmission | (148,429,681) | 868,066 |
| 58 | Plant - Liberalized Depreciation: Distribution | (168,726,714) | (2,537,652) |
| 59 | Plant - Liberalized Depreciation: General and Intangible | (14,970,777) | 696,021 |
| 60 | Plant - Liberalized Depreciation: Grid Mod | (10,015,741) | (562,980) |
| 61 | Plant - Liberalized Depreciation: Renewables | (47,553,437) | 179,475 |
| 62 | Plant - Four Corners Imprudence | - | - |
| 63 | Regulatory Assets - SJGS Stranded Costs Units 2&3 | (17,006,328) | 132,862 |
| 64 | Pension | (38,182,141) | 90,669 |
| 65 | Retiree Medical | - | - |
| 66 | Lease Asset | - | - |
| 67 | Loss on Reacquired Debt | (900,775) | 8,293 |
| 68 | Other Comprehensive Income (OCI) | - | - |
| 69 | Deferred Credits - SO2 Allowance | - | - |
| 70 | Deferred Debits - Rate Case Expense | - | - |
| 71 | Deferred Debits - Decoupling | - | - |
| 72 | Deferred Debits - Grid Modernization | - | - |
| 73 | Deferred Debits - RR Underground Rider | - | - |
| 74 | Energy Storage Agreement | (5,647,786) | (496,420) |
| 75 | Energy Transition Charges | - | - |
| 76 | Prepaid Expenses | (1,168,330) | - |
| 77 | Regulatory Assets - 2024 COVID Bad Debt | - | - |
| 78 | Regulatory Assets - COVID-19 Costs | (143,095) | 22,874 |
| 79 | Regulatory Assets - Community Solar | (902,756) | - |
| 80 | Regulatory assets - FAC | 0 | - |
| 81 | Regulatory Assets - EDAM Costs | (581,077) | (51,476) |
| 82 | Regulatory Assets - EIM Costs | (1,551,172) | 79,547 |
| 83 | Regulatory Assets - Energy Efficiency | (129,051) | - |
| 84 | Regulatory Assets - ETA | - | - |
| 85 | Regulatory Assets - FERC 893 Cyber | - | - |
| 86 | Regulatory Assets - IRP | (45,483) | - |
| 87 | Regulatory Assets - Sky Blue Under Recovery | - | - |
| 88 | Regulatory Assets - Renewable Energy | 2,678,721 | (24,267) |
| 89 | Regulatory Assets - Renewable Energy Credits | (78,530) | - |
| 90 | Regulatory Assets - SJGS External Legal Fees | (108,720) | 419 |
| 91 | Regulatory Assets - SJGS Final ETA Depcom | - | - |
| 92 | Regulatory Assets - SJGS Final ETA Mine Rec | - | - |
| 93 | Regulatory Assets - SJGS Replacement Resources | (1,827,666) | 7,043 |
| 94 | Regulatory Assets - SJGS Undepreciated Investment | - | - |
| 95 | Regulatory Assets - SJGS Underground Coal Mine | - | - |
| 96 | Regulatory Assets - Solar Direct Regulatory Assets | - | - |
| 97 | Regulatory Assets - TOD Rate Pilot Program | (784,797) | - |
| 98 | Regulatory Assets - Transportation Electrification | - | - |

| | A | BL | BM |
|---|---|---|---|
| 1 | **Public Service Company of New Mexico** | | |
| 2 | **Schedule H-12** | | |
| 3 | **Accumulated Tax Deferrals** | | |
| 4 | **Base Period Ending 6/30/2026** | | |
| 5 | **Test Period Ending 9/30/2028** | | |
| 6 | **This schedule is sponsored by PNM Witness Morris** | | |
| 7 | | | |
| 8 | | | |
| 9 | | **31-May-27** | |
| 10 | | **Balance** | **Activity** |
| 99 | Regulatory Assets - WCC Transaction Costs | - | - |
| 100 | Regulatory Liabilities - Energy Efficiency | - | - |
| 101 | Regulatory Liabilities - FAC | - | - |
| 102 | Regulatory Assets - PCB Refinancing Hedge | (1,517,371) | 17,874 |
| 103 | Prepaid Expenses: Production | (445,840) | - |
| 104 | Prepaid Expenses: Transmission | (1,849,743) | - |
| 105 | Prepaid Expenses: Transmission (incremental FERC Rates) | - | - |
| 106 | Prepaid Expenses: Distribution | (135,016) | - |
| 107 | Prepaid Expenses: Renewables | - | - |
| 108 | Regulatory Assets - 2024 Rate Change | (398,830) | 20,453 |
| 109 | Regulatory Assets - 2025 Rate Change | (315,984) | 8,540 |
| 110 | Regulatory Assets - SJGS Obsolete Inventory | (1,382,996) | 5,329 |
| 111 | Regulatory Liabilities - Earnings Test | - | - |
| 112 | Regulatory Assets - PVNGS Lease costs | (5,072) | - |
| 113 | Regulatory Assets - PVNGS Undepreciated Investment | (9,763,738) | 48,942 |
| 114 | Regulatory Assets - ETC Over/Under SPE | - | - |
| 115 | Regulatory Assets - PVNGS Replacement Resources | (437,663) | 2,194 |
| 116 | Regulatory Assets - Rate Rider 12 UG Rate | - | - |
| 117 | Regulatory Assets - Renewable Rider Curr Reg | - | - |
| 118 | Regulatory Assets - SJ Energy Transition Property (SPE) | (79,673,240) | 273,415 |
| 119 | Regulatory Liabilities - Curr Reg Liab-UG Rate Rider 12 | - | - |
| 120 | Regulatory Liabilities - ITC Sandia | 7,087,254 | - |
| 121 | Regulatory Liabilities - ITC Sunbelt | - | - |
| 122 | Regulatory Liabilities - ITC - Distribution Battery Phase 2 | - | - |
| 123 | Regulatory Liabilities - Energy Transition Cost True Up | 284,006 | (1,114) |
| 124 | Regulatory Liabilities - SJGS Retirements Rate Credit | 23,805 | - |
| 125 | Regulatory Liabilities - PVNGS Lease Costs | - | - |
| 126 | Deferred Debits - WS-Transmission Revenue | - | - |
| 127 | Customer Advance | - | - |
| 128 | Deferred Credits - ETA | - | - |
| 129 | Other Liabilities - ETA Coal Mine Severance | - | - |
| 130 | Other Liabilities - ETA State Agency Payments | - | - |
| 131 | SJGS County Ordinance Decommission | - | - |
| 132 | | | |
| 133 | **Total Accumulated Deferred Income Taxes** | (840,135,804) | (621,622) |
| 134 | | | |
| 135 | General Ledger ADIT Balance | | |
| 136 | | | |
| 137 | Difference (Rounding) | | |

| | A | BN | BO |
|---|---|---|---|
| 1 | **Public Service Company of New Mexico** | | |
| 2 | **Schedule H-12** | | |
| 3 | **Accumulated Tax Deferrals** | | |
| 4 | **Base Period Ending 6/30/2026** | | |
| 5 | **Test Period Ending 9/30/2028** | | |
| 6 | **This schedule is sponsored by PNM Witness Morris** | | |
| 7 | | | |
| 8 | | | |
| 9 | | **30-Jun-27** | |
| 10 | | **Balance** | **Activity** |
| 11 | **Accumulated Deferred Income Taxes** | | |
| 12 | Federal Tax Credit Carryforward | 21,743,653 | - |
| 13 | Federal Tax Credit Carryforward - Renewables | - | - |
| 14 | Net Operating Loss (NOL) | 53,415,338 | - |
| 15 | Incentive Pay Plans | - | - |
| 16 | Regulatory Assets - Coal Mine Decommissioning | - | - |
| 17 | Regulatory Liabilities - Renewable Rider | - | - |
| 18 | Income Tax Regulatory Liability | 73,553,662 | 1,950,139 |
| 19 | Income Tax Regulatory Asset | (65,518,006) | - |
| 20 | Investment Tax Credit 2024 | 7,393,757 | - |
| 21 | Investment Tax Credit - Sandia | - | - |
| 22 | Investment Tax Credit - Sunbelt | - | - |
| 23 | Investment Tax Credit - Distribution Battery Phase 2 | - | - |
| 24 | Lease Liability | - | - |
| 25 | Deferred Credits - Coal Mine Decommissioning | - | - |
| 26 | Regulatory Assets - ETA Carrying Charges | - | - |
| 27 | Regulatory Assets - ETA Job Training & Severance | - | - |
| 28 | Regulatory Assets - ETA Payments to State Agencies | - | - |
| 29 | Regulatory Assets - ETA SJGS Plant Decommissioning | - | - |
| 30 | Regulatory Assets - ETA SJGS upfront Financing Cost | - | - |
| 31 | Regulatory Assets - ETA Westmoreland Coal Mine Sev | - | - |
| 32 | Deferred Credits - Joint Use | 117,124 | (3,549) |
| 33 | Deferred Credits - Pathnet | 1,376,934 | (1,801) |
| 34 | Deferred Credits - PVNGS Dry Casks | - | - |
| 35 | Other Deferred Credits | - | - |
| 36 | Other Liabilities - ETA Job Training and Severance | - | - |
| 37 | Other Liabilities - Navajo Workforce Training | - | - |
| 38 | Other Liabilities | - | - |
| 39 | Blackstone Transaction Costs | - | - |
| 40 | Injury and Damages | 2,058,181 | - |
| 41 | Plant - AFUDC | (42,991,743) | (415,901) |
| 42 | Plant - Capitalized Interest | 17,607,447 | - |
| 43 | Decommissioning and Reclamation Trusts | - | - |
| 44 | ASC 740-10 (FIN 48) Reclassifications | - | - |
| 45 | Estimated Tax Rate Adjustment | - | - |
| 46 | PVNGS Licensing | 1,687 | (281) |
| 47 | Plant - 263A Adjustment | (80,078,392) | - |
| 48 | Deferred State Taxes | - | - |
| 49 | Plant - CIAC | 26,503,887 | - |
| 50 | Plant - Depreciation Nuclear Fuel | 9,682,299 | (267,819) |
| 51 | Plant - Removal Cost | (4,446,299) | - |
| 52 | Plant - Repairs | (181,441,630) | (1,602,502) |
| 53 | Plant - Section 174 Deduction | 7,509,732 | - |
| 54 | Plant - Asset Retirement Obligation | 10,137,757 | 46,929 |

| | A | BN | BO |
|---|---|---|---|
| 1 | **Public Service Company of New Mexico** | | |
| 2 | **Schedule H-12** | | |
| 3 | **Accumulated Tax Deferrals** | | |
| 4 | **Base Period Ending 6/30/2026** | | |
| 5 | **Test Period Ending 9/30/2028** | | |
| 6 | **This schedule is sponsored by PNM Witness Morris** | | |
| 7 | | | |
| 8 | | | |
| 9 | | **30-Jun-27** | |
| 10 | | **Balance** | **Activity** |
| 55 | Plant - Pollution Control Property | (2,154,701) | - |
| 56 | Plant - Liberalized Depreciation: Production | (149,410,455) | 724,486 |
| 57 | Plant - Liberalized Depreciation: Transmission | (147,561,615) | (913,781) |
| 58 | Plant - Liberalized Depreciation: Distribution | (171,264,366) | (846,907) |
| 59 | Plant - Liberalized Depreciation: General and Intangible | (14,274,756) | 613,881 |
| 60 | Plant - Liberalized Depreciation: Grid Mod | (10,578,721) | (398,766) |
| 61 | Plant - Liberalized Depreciation: Renewables | (47,373,962) | 181,314 |
| 62 | Plant - Four Corners Imprudence | - | - |
| 63 | Regulatory Assets - SJGS Stranded Costs Units 2&3 | (16,873,466) | 132,862 |
| 64 | Pension | (38,091,472) | 90,669 |
| 65 | Retiree Medical | - | - |
| 66 | Lease Asset | - | - |
| 67 | Loss on Reacquired Debt | (892,483) | 8,293 |
| 68 | Other Comprehensive Income (OCI) | - | - |
| 69 | Deferred Credits - SO2 Allowance | - | - |
| 70 | Deferred Debits - Rate Case Expense | - | - |
| 71 | Deferred Debits - Decoupling | - | - |
| 72 | Deferred Debits - Grid Modernization | - | - |
| 73 | Deferred Debits - RR Underground Rider | - | - |
| 74 | Energy Storage Agreement | (6,144,206) | (569,019) |
| 75 | Energy Transition Charges | - | - |
| 76 | Prepaid Expenses | (1,168,330) | - |
| 77 | Regulatory Assets - 2024 COVID Bad Debt | - | - |
| 78 | Regulatory Assets - COVID-19 Costs | (120,221) | - |
| 79 | Regulatory Assets - Community Solar | (902,756) | - |
| 80 | Regulatory assets - FAC | 0 | - |
| 81 | Regulatory Assets - EDAM Costs | (632,553) | (51,476) |
| 82 | Regulatory Assets - EIM Costs | (1,471,625) | 79,547 |
| 83 | Regulatory Assets - Energy Efficiency | (129,051) | - |
| 84 | Regulatory Assets - ETA | - | - |
| 85 | Regulatory Assets - FERC 893 Cyber | - | - |
| 86 | Regulatory Assets - IRP | (45,483) | - |
| 87 | Regulatory Assets - Sky Blue Under Recovery | - | - |
| 88 | Regulatory Assets - Renewable Energy | 2,654,454 | (24,267) |
| 89 | Regulatory Assets - Renewable Energy Credits | (78,530) | - |
| 90 | Regulatory Assets - SJGS External Legal Fees | (108,301) | 419 |
| 91 | Regulatory Assets - SJGS Final ETA Depcom | - | - |
| 92 | Regulatory Assets - SJGS Final ETA Mine Rec | - | - |
| 93 | Regulatory Assets - SJGS Replacement Resources | (1,820,623) | 7,043 |
| 94 | Regulatory Assets - SJGS Undepreciated Investment | - | - |
| 95 | Regulatory Assets - SJGS Underground Coal Mine | - | - |
| 96 | Regulatory Assets - Solar Direct Regulatory Assets | - | - |
| 97 | Regulatory Assets - TOD Rate Pilot Program | (784,797) | - |
| 98 | Regulatory Assets - Transportation Electrification | - | - |

| | A | BN | BO |
|---|---|---|---|
| 1 | **Public Service Company of New Mexico** | | |
| 2 | **Schedule H-12** | | |
| 3 | **Accumulated Tax Deferrals** | | |
| 4 | **Base Period Ending 6/30/2026** | | |
| 5 | **Test Period Ending 9/30/2028** | | |
| 6 | **This schedule is sponsored by PNM Witness Morris** | | |
| 7 | | | |
| 8 | | | |
| 9 | | **30-Jun-27** | |
| 10 | | **Balance** | **Activity** |
| 99 | Regulatory Assets - WCC Transaction Costs | - | - |
| 100 | Regulatory Liabilities - Energy Efficiency | - | - |
| 101 | Regulatory Liabilities - FAC | - | - |
| 102 | Regulatory Assets - PCB Refinancing Hedge | (1,499,497) | 17,874 |
| 103 | Prepaid Expenses: Production | (445,840) | - |
| 104 | Prepaid Expenses: Transmission | (1,849,743) | - |
| 105 | Prepaid Expenses: Transmission (incremental FERC Rates) | - | - |
| 106 | Prepaid Expenses: Distribution | (135,016) | - |
| 107 | Prepaid Expenses: Renewables | - | - |
| 108 | Regulatory Assets - 2024 Rate Change | (378,377) | 20,453 |
| 109 | Regulatory Assets - 2025 Rate Change | (307,444) | 8,540 |
| 110 | Regulatory Assets - SJGS Obsolete Inventory | (1,377,666) | 5,329 |
| 111 | Regulatory Liabilities - Earnings Test | - | - |
| 112 | Regulatory Assets - PVNGS Lease costs | (5,072) | - |
| 113 | Regulatory Assets - PVNGS Undepreciated Investment | (9,714,796) | 48,942 |
| 114 | Regulatory Assets - ETC Over/Under SPE | - | - |
| 115 | Regulatory Assets - PVNGS Replacement Resources | (435,469) | 2,194 |
| 116 | Regulatory Assets - Rate Rider 12 UG Rate | - | - |
| 117 | Regulatory Assets - Renewable Rider Curr Reg | - | - |
| 118 | Regulatory Assets - SJ Energy Transition Property (SPE) | (79,399,824) | 273,415 |
| 119 | Regulatory Liabilities - Curr Reg Liab-UG Rate Rider 12 | - | - |
| 120 | Regulatory Liabilities - ITC Sandia | 7,087,254 | - |
| 121 | Regulatory Liabilities - ITC Sunbelt | - | - |
| 122 | Regulatory Liabilities - ITC - Distribution Battery Phase 2 | - | - |
| 123 | Regulatory Liabilities - Energy Transition Cost True Up | 282,892 | (1,114) |
| 124 | Regulatory Liabilities - SJGS Retirements Rate Credit | 23,805 | - |
| 125 | Regulatory Liabilities - PVNGS Lease Costs | - | - |
| 126 | Deferred Debits - WS-Transmission Revenue | - | - |
| 127 | Customer Advance | - | - |
| 128 | Deferred Credits - ETA | - | - |
| 129 | Other Liabilities - ETA Coal Mine Severance | - | - |
| 130 | Other Liabilities - ETA State Agency Payments | - | - |
| 131 | SJGS County Ordinance Decommission | - | - |
| 132 | | | |
| 133 | **Total Accumulated Deferred Income Taxes** | (840,757,425) | (884,853) |
| 134 | | | |
| 135 | General Ledger ADIT Balance | | |
| 136 | | | |
| 137 | Difference (Rounding) | | |

| | A | BP | BQ |
|---|---|---|---|
| 1 | **Public Service Company of New Mexico** | | |
| 2 | **Schedule H-12** | | |
| 3 | **Accumulated Tax Deferrals** | | |
| 4 | **Base Period Ending 6/30/2026** | | |
| 5 | **Test Period Ending 9/30/2028** | | |
| 6 | **This schedule is sponsored by PNM Witness Morris** | | |
| 7 | | | |
| 8 | | | |
| 9 | | **31-Jul-27** | |
| 10 | | **Balance** | **Activity** |
| 11 | **Accumulated Deferred Income Taxes** | | |
| 12 | Federal Tax Credit Carryforward | 21,743,653 | - |
| 13 | Federal Tax Credit Carryforward - Renewables | - | - |
| 14 | Net Operating Loss (NOL) | 53,415,338 | - |
| 15 | Incentive Pay Plans | - | - |
| 16 | Regulatory Assets - Coal Mine Decommissioning | - | - |
| 17 | Regulatory Liabilities - Renewable Rider | - | - |
| 18 | Income Tax Regulatory Liability | 75,503,801 | 1,950,139 |
| 19 | Income Tax Regulatory Asset | (65,518,006) | - |
| 20 | Investment Tax Credit 2024 | 7,393,757 | - |
| 21 | Investment Tax Credit - Sandia | - | - |
| 22 | Investment Tax Credit - Sunbelt | - | - |
| 23 | Investment Tax Credit - Distribution Battery Phase 2 | - | - |
| 24 | Lease Liability | - | - |
| 25 | Deferred Credits - Coal Mine Decommissioning | - | - |
| 26 | Regulatory Assets - ETA Carrying Charges | - | - |
| 27 | Regulatory Assets - ETA Job Training & Severance | - | - |
| 28 | Regulatory Assets - ETA Payments to State Agencies | - | - |
| 29 | Regulatory Assets - ETA SJGS Plant Decommissioning | - | - |
| 30 | Regulatory Assets - ETA SJGS upfront Financing Cost | - | - |
| 31 | Regulatory Assets - ETA Westmoreland Coal Mine Sev | - | - |
| 32 | Deferred Credits - Joint Use | 113,575 | (3,549) |
| 33 | Deferred Credits - Pathnet | 1,375,133 | (1,801) |
| 34 | Deferred Credits - PVNGS Dry Casks | - | - |
| 35 | Other Deferred Credits | - | - |
| 36 | Other Liabilities - ETA Job Training and Severance | - | - |
| 37 | Other Liabilities - Navajo Workforce Training | - | - |
| 38 | Other Liabilities | - | - |
| 39 | Blackstone Transaction Costs | - | - |
| 40 | Injury and Damages | 2,058,181 | - |
| 41 | Plant - AFUDC | (43,407,644) | (438,008) |
| 42 | Plant - Capitalized Interest | 17,607,447 | - |
| 43 | Decommissioning and Reclamation Trusts | - | - |
| 44 | ASC 740-10 (FIN 48) Reclassifications | - | - |
| 45 | Estimated Tax Rate Adjustment | - | - |
| 46 | PVNGS Licensing | 1,406 | (281) |
| 47 | Plant - 263A Adjustment | (80,078,392) | - |
| 48 | Deferred State Taxes | - | - |
| 49 | Plant - CIAC | 26,503,887 | - |
| 50 | Plant - Depreciation Nuclear Fuel | 9,414,480 | (265,798) |
| 51 | Plant - Removal Cost | (4,446,299) | - |
| 52 | Plant - Repairs | (183,044,132) | (566,926) |
| 53 | Plant - Section 174 Deduction | 7,509,732 | - |
| 54 | Plant - Asset Retirement Obligation | 10,184,686 | 47,176 |

| | A | BP | BQ |
|---|---|---|---|
| 1 | **Public Service Company of New Mexico** | | |
| 2 | **Schedule H-12** | | |
| 3 | **Accumulated Tax Deferrals** | | |
| 4 | **Base Period Ending 6/30/2026** | | |
| 5 | **Test Period Ending 9/30/2028** | | |
| 6 | **This schedule is sponsored by PNM Witness Morris** | | |
| 7 | | | |
| 8 | | | |
| 9 | | **31-Jul-27** | |
| 10 | | **Balance** | **Activity** |
| 55 | Plant - Pollution Control Property | (2,154,701) | - |
| 56 | Plant - Liberalized Depreciation: Production | (148,685,969) | 860,799 |
| 57 | Plant - Liberalized Depreciation: Transmission | (148,475,396) | 1,240,314 |
| 58 | Plant - Liberalized Depreciation: Distribution | (172,111,272) | (2,121,909) |
| 59 | Plant - Liberalized Depreciation: General and Intangible | (13,660,875) | 693,695 |
| 60 | Plant - Liberalized Depreciation: Grid Mod | (10,977,487) | (1,438,833) |
| 61 | Plant - Liberalized Depreciation: Renewables | (47,192,648) | 186,402 |
| 62 | Plant - Four Corners Imprudence | - | - |
| 63 | Regulatory Assets - SJGS Stranded Costs Units 2&3 | (16,740,605) | 132,862 |
| 64 | Pension | (38,000,804) | 90,669 |
| 65 | Retiree Medical | - | - |
| 66 | Lease Asset | - | - |
| 67 | Loss on Reacquired Debt | (884,190) | 8,293 |
| 68 | Other Comprehensive Income (OCI) | - | - |
| 69 | Deferred Credits - SO2 Allowance | - | - |
| 70 | Deferred Debits - Rate Case Expense | - | - |
| 71 | Deferred Debits - Decoupling | - | - |
| 72 | Deferred Debits - Grid Modernization | - | - |
| 73 | Deferred Debits - RR Underground Rider | - | - |
| 74 | Energy Storage Agreement | (6,713,225) | (574,522) |
| 75 | Energy Transition Charges | - | - |
| 76 | Prepaid Expenses | (1,168,330) | - |
| 77 | Regulatory Assets - 2024 COVID Bad Debt | - | - |
| 78 | Regulatory Assets - COVID-19 Costs | (120,221) | - |
| 79 | Regulatory Assets - Community Solar | (902,756) | - |
| 80 | Regulatory assets - FAC | 0 | - |
| 81 | Regulatory Assets - EDAM Costs | (684,029) | (51,476) |
| 82 | Regulatory Assets - EIM Costs | (1,392,078) | 79,547 |
| 83 | Regulatory Assets - Energy Efficiency | (129,051) | - |
| 84 | Regulatory Assets - ETA | - | - |
| 85 | Regulatory Assets - FERC 893 Cyber | - | - |
| 86 | Regulatory Assets - IRP | (45,483) | - |
| 87 | Regulatory Assets - Sky Blue Under Recovery | - | - |
| 88 | Regulatory Assets - Renewable Energy | 2,630,188 | (24,267) |
| 89 | Regulatory Assets - Renewable Energy Credits | (78,530) | - |
| 90 | Regulatory Assets - SJGS External Legal Fees | (107,882) | 419 |
| 91 | Regulatory Assets - SJGS Final ETA Depcom | - | - |
| 92 | Regulatory Assets - SJGS Final ETA Mine Rec | - | - |
| 93 | Regulatory Assets - SJGS Replacement Resources | (1,813,580) | 7,043 |
| 94 | Regulatory Assets - SJGS Undepreciated Investment | - | - |
| 95 | Regulatory Assets - SJGS Underground Coal Mine | - | - |
| 96 | Regulatory Assets - Solar Direct Regulatory Assets | - | - |
| 97 | Regulatory Assets - TOD Rate Pilot Program | (784,797) | - |
| 98 | Regulatory Assets - Transportation Electrification | - | - |

| | A | BP | BQ |
|---|---|---|---|
| 1 | **Public Service Company of New Mexico** | | |
| 2 | **Schedule H-12** | | |
| 3 | **Accumulated Tax Deferrals** | | |
| 4 | **Base Period Ending 6/30/2026** | | |
| 5 | **Test Period Ending 9/30/2028** | | |
| 6 | **This schedule is sponsored by PNM Witness Morris** | | |
| 7 | | | |
| 8 | | | |
| 9 | | **31-Jul-27** | |
| 10 | | **Balance** | **Activity** |
| 99 | Regulatory Assets - WCC Transaction Costs | - | - |
| 100 | Regulatory Liabilities - Energy Efficiency | - | - |
| 101 | Regulatory Liabilities - FAC | - | - |
| 102 | Regulatory Assets - PCB Refinancing Hedge | (1,481,622) | 17,874 |
| 103 | Prepaid Expenses: Production | (445,840) | - |
| 104 | Prepaid Expenses: Transmission | (1,849,743) | - |
| 105 | Prepaid Expenses: Transmission (incremental FERC Rates) | - | - |
| 106 | Prepaid Expenses: Distribution | (135,016) | - |
| 107 | Prepaid Expenses: Renewables | - | - |
| 108 | Regulatory Assets - 2024 Rate Change | (357,924) | 20,453 |
| 109 | Regulatory Assets - 2025 Rate Change | (298,904) | 8,540 |
| 110 | Regulatory Assets - SJGS Obsolete Inventory | (1,372,337) | 5,329 |
| 111 | Regulatory Liabilities - Earnings Test | - | - |
| 112 | Regulatory Assets - PVNGS Lease costs | (5,072) | - |
| 113 | Regulatory Assets - PVNGS Undepreciated Investment | (9,665,855) | 48,942 |
| 114 | Regulatory Assets - ETC Over/Under SPE | - | - |
| 115 | Regulatory Assets - PVNGS Replacement Resources | (433,275) | 2,194 |
| 116 | Regulatory Assets - Rate Rider 12 UG Rate | - | - |
| 117 | Regulatory Assets - Renewable Rider Curr Reg | - | - |
| 118 | Regulatory Assets - SJ Energy Transition Property (SPE) | (79,126,409) | 273,415 |
| 119 | Regulatory Liabilities - Curr Reg Liab-UG Rate Rider 12 | - | - |
| 120 | Regulatory Liabilities - ITC Sandia | 7,087,254 | - |
| 121 | Regulatory Liabilities - ITC Sunbelt | - | - |
| 122 | Regulatory Liabilities - ITC - Distribution Battery Phase 2 | - | - |
| 123 | Regulatory Liabilities - Energy Transition Cost True Up | 281,779 | (1,114) |
| 124 | Regulatory Liabilities - SJGS Retirements Rate Credit | 23,805 | - |
| 125 | Regulatory Liabilities - PVNGS Lease Costs | - | - |
| 126 | Deferred Debits - WS-Transmission Revenue | - | - |
| 127 | Customer Advance | - | - |
| 128 | Deferred Credits - ETA | - | - |
| 129 | Other Liabilities - ETA Coal Mine Severance | - | - |
| 130 | Other Liabilities - ETA State Agency Payments | - | - |
| 131 | SJGS County Ordinance Decommission | - | - |
| 132 | | | |
| 133 | **Total Accumulated Deferred Income Taxes** | (841,642,278) | 185,622 |
| 134 | | | |
| 135 | General Ledger ADIT Balance | | |
| 136 | | | |
| 137 | Difference (Rounding) | | |

| | A | BR | BS |
|---|---|---|---|
| 1 | **Public Service Company of New Mexico** | | |
| 2 | **Schedule H-12** | | |
| 3 | **Accumulated Tax Deferrals** | | |
| 4 | **Base Period Ending 6/30/2026** | | |
| 5 | **Test Period Ending 9/30/2028** | | |
| 6 | **This schedule is sponsored by PNM Witness Morris** | | |
| 7 | | | |
| 8 | | | |
| 9 | | **31-Aug-27** | |
| 10 | | **Balance** | **Activity** |
| 11 | **Accumulated Deferred Income Taxes** | | |
| 12 | Federal Tax Credit Carryforward | 21,743,653 | - |
| 13 | Federal Tax Credit Carryforward - Renewables | - | - |
| 14 | Net Operating Loss (NOL) | 53,415,338 | - |
| 15 | Incentive Pay Plans | - | - |
| 16 | Regulatory Assets - Coal Mine Decommissioning | - | - |
| 17 | Regulatory Liabilities - Renewable Rider | - | - |
| 18 | Income Tax Regulatory Liability | 77,453,941 | 1,950,139 |
| 19 | Income Tax Regulatory Asset | (65,518,006) | - |
| 20 | Investment Tax Credit 2024 | 7,393,757 | - |
| 21 | Investment Tax Credit - Sandia | - | - |
| 22 | Investment Tax Credit - Sunbelt | - | - |
| 23 | Investment Tax Credit - Distribution Battery Phase 2 | - | - |
| 24 | Lease Liability | - | - |
| 25 | Deferred Credits - Coal Mine Decommissioning | - | - |
| 26 | Regulatory Assets - ETA Carrying Charges | - | - |
| 27 | Regulatory Assets - ETA Job Training & Severance | - | - |
| 28 | Regulatory Assets - ETA Payments to State Agencies | - | - |
| 29 | Regulatory Assets - ETA SJGS Plant Decommissioning | - | - |
| 30 | Regulatory Assets - ETA SJGS upfront Financing Cost | - | - |
| 31 | Regulatory Assets - ETA Westmoreland Coal Mine Sev | - | - |
| 32 | Deferred Credits - Joint Use | 110,026 | (3,549) |
| 33 | Deferred Credits - Pathnet | 1,373,332 | (1,801) |
| 34 | Deferred Credits - PVNGS Dry Casks | - | - |
| 35 | Other Deferred Credits | - | - |
| 36 | Other Liabilities - ETA Job Training and Severance | - | - |
| 37 | Other Liabilities - Navajo Workforce Training | - | - |
| 38 | Other Liabilities | - | - |
| 39 | Blackstone Transaction Costs | - | - |
| 40 | Injury and Damages | 2,058,181 | - |
| 41 | Plant - AFUDC | (43,845,652) | (466,157) |
| 42 | Plant - Capitalized Interest | 17,607,447 | - |
| 43 | Decommissioning and Reclamation Trusts | - | - |
| 44 | ASC 740-10 (FIN 48) Reclassifications | - | - |
| 45 | Estimated Tax Rate Adjustment | - | - |
| 46 | PVNGS Licensing | 1,125 | (281) |
| 47 | Plant - 263A Adjustment | (80,078,392) | - |
| 48 | Deferred State Taxes | - | - |
| 49 | Plant - CIAC | 26,503,887 | - |
| 50 | Plant - Depreciation Nuclear Fuel | 9,148,682 | 190,059 |
| 51 | Plant - Removal Cost | (4,446,299) | - |
| 52 | Plant - Repairs | (183,611,058) | (13,055,202) |
| 53 | Plant - Section 174 Deduction | 7,509,732 | - |
| 54 | Plant - Asset Retirement Obligation | 10,231,863 | 47,425 |

| | A | BR | BS |
|---|---|---|---|
| 1 | **Public Service Company of New Mexico** | | |
| 2 | **Schedule H-12** | | |
| 3 | **Accumulated Tax Deferrals** | | |
| 4 | **Base Period Ending 6/30/2026** | | |
| 5 | **Test Period Ending 9/30/2028** | | |
| 6 | **This schedule is sponsored by PNM Witness Morris** | | |
| 7 | | | |
| 8 | | | |
| 9 | | **31-Aug-27** | |
| 10 | | **Balance** | **Activity** |
| 55 | Plant - Pollution Control Property | (2,154,701) | - |
| 56 | Plant - Liberalized Depreciation: Production | (147,825,171) | (2,189,228) |
| 57 | Plant - Liberalized Depreciation: Transmission | (147,235,082) | 871,149 |
| 58 | Plant - Liberalized Depreciation: Distribution | (174,233,181) | 1,665,747 |
| 59 | Plant - Liberalized Depreciation: General and Intangible | (12,967,180) | 664,278 |
| 60 | Plant - Liberalized Depreciation: Grid Mod | (12,416,320) | (1,763,384) |
| 61 | Plant - Liberalized Depreciation: Renewables | (47,006,247) | 177,753 |
| 62 | Plant - Four Corners Imprudence | - | - |
| 63 | Regulatory Assets - SJGS Stranded Costs Units 2&3 | (16,607,743) | 132,862 |
| 64 | Pension | (37,910,135) | 90,669 |
| 65 | Retiree Medical | - | - |
| 66 | Lease Asset | - | - |
| 67 | Loss on Reacquired Debt | (875,897) | 8,293 |
| 68 | Other Comprehensive Income (OCI) | - | - |
| 69 | Deferred Credits - SO2 Allowance | - | - |
| 70 | Deferred Debits - Rate Case Expense | - | (1,050,798) |
| 71 | Deferred Debits - Decoupling | - | - |
| 72 | Deferred Debits - Grid Modernization | - | - |
| 73 | Deferred Debits - RR Underground Rider | - | - |
| 74 | Energy Storage Agreement | (7,287,747) | (500,838) |
| 75 | Energy Transition Charges | - | - |
| 76 | Prepaid Expenses | (1,168,330) | - |
| 77 | Regulatory Assets - 2024 COVID Bad Debt | - | - |
| 78 | Regulatory Assets - COVID-19 Costs | (120,221) | - |
| 79 | Regulatory Assets - Community Solar | (902,756) | - |
| 80 | Regulatory assets - FAC | 0 | - |
| 81 | Regulatory Assets - EDAM Costs | (735,505) | (51,476) |
| 82 | Regulatory Assets - EIM Costs | (1,312,530) | 79,547 |
| 83 | Regulatory Assets - Energy Efficiency | (129,051) | - |
| 84 | Regulatory Assets - ETA | - | - |
| 85 | Regulatory Assets - FERC 893 Cyber | - | - |
| 86 | Regulatory Assets - IRP | (45,483) | - |
| 87 | Regulatory Assets - Sky Blue Under Recovery | - | - |
| 88 | Regulatory Assets - Renewable Energy | 2,605,921 | (24,267) |
| 89 | Regulatory Assets - Renewable Energy Credits | (78,530) | - |
| 90 | Regulatory Assets - SJGS External Legal Fees | (107,463) | 419 |
| 91 | Regulatory Assets - SJGS Final ETA Depcom | - | - |
| 92 | Regulatory Assets - SJGS Final ETA Mine Rec | - | - |
| 93 | Regulatory Assets - SJGS Replacement Resources | (1,806,537) | 7,043 |
| 94 | Regulatory Assets - SJGS Undepreciated Investment | - | - |
| 95 | Regulatory Assets - SJGS Underground Coal Mine | - | - |
| 96 | Regulatory Assets - Solar Direct Regulatory Assets | - | - |
| 97 | Regulatory Assets - TOD Rate Pilot Program | (784,797) | - |
| 98 | Regulatory Assets - Transportation Electrification | - | - |

| | A | BR | BS |
|---|---|---|---|
| 1 | **Public Service Company of New Mexico** | | |
| 2 | **Schedule H-12** | | |
| 3 | **Accumulated Tax Deferrals** | | |
| 4 | **Base Period Ending 6/30/2026** | | |
| 5 | **Test Period Ending 9/30/2028** | | |
| 6 | **This schedule is sponsored by PNM Witness Morris** | | |
| 7 | | | |
| 8 | | | |
| 9 | | **31-Aug-27** | |
| 10 | | **Balance** | **Activity** |
| 99 | Regulatory Assets - WCC Transaction Costs | - | - |
| 100 | Regulatory Liabilities - Energy Efficiency | - | - |
| 101 | Regulatory Liabilities - FAC | - | - |
| 102 | Regulatory Assets - PCB Refinancing Hedge | (1,463,748) | 17,874 |
| 103 | Prepaid Expenses: Production | (445,840) | - |
| 104 | Prepaid Expenses: Transmission | (1,849,743) | - |
| 105 | Prepaid Expenses: Transmission (incremental FERC Rates) | - | - |
| 106 | Prepaid Expenses: Distribution | (135,016) | - |
| 107 | Prepaid Expenses: Renewables | - | - |
| 108 | Regulatory Assets - 2024 Rate Change | (337,471) | 20,453 |
| 109 | Regulatory Assets - 2025 Rate Change | (290,364) | 8,540 |
| 110 | Regulatory Assets - SJGS Obsolete Inventory | (1,367,007) | 5,329 |
| 111 | Regulatory Liabilities - Earnings Test | - | - |
| 112 | Regulatory Assets - PVNGS Lease costs | (5,072) | - |
| 113 | Regulatory Assets - PVNGS Undepreciated Investment | (9,616,913) | 48,942 |
| 114 | Regulatory Assets - ETC Over/Under SPE | - | - |
| 115 | Regulatory Assets - PVNGS Replacement Resources | (431,081) | 2,194 |
| 116 | Regulatory Assets - Rate Rider 12 UG Rate | - | - |
| 117 | Regulatory Assets - Renewable Rider Curr Reg | - | - |
| 118 | Regulatory Assets - SJ Energy Transition Property (SPE) | (78,852,994) | 273,415 |
| 119 | Regulatory Liabilities - Curr Reg Liab-UG Rate Rider 12 | - | - |
| 120 | Regulatory Liabilities - ITC Sandia | 7,087,254 | - |
| 121 | Regulatory Liabilities - ITC Sunbelt | - | - |
| 122 | Regulatory Liabilities - ITC - Distribution Battery Phase 2 | - | - |
| 123 | Regulatory Liabilities - Energy Transition Cost True Up | 280,665 | (1,114) |
| 124 | Regulatory Liabilities - SJGS Retirements Rate Credit | 23,805 | - |
| 125 | Regulatory Liabilities - PVNGS Lease Costs | - | - |
| 126 | Deferred Debits - WS-Transmission Revenue | - | - |
| 127 | Customer Advance | - | - |
| 128 | Deferred Credits - ETA | - | - |
| 129 | Other Liabilities - ETA Coal Mine Severance | - | - |
| 130 | Other Liabilities - ETA State Agency Payments | - | - |
| 131 | SJGS County Ordinance Decommission | - | - |
| 132 | | | |
| 133 | **Total Accumulated Deferred Income Taxes** | (841,456,657) | (12,845,966) |
| 134 | | | |
| 135 | General Ledger ADIT Balance | | |
| 136 | | | |
| 137 | Difference (Rounding) | | |

| | A | BT | BU |
|---|---|---|---|
| 1 | **Public Service Company of New Mexico** | | |
| 2 | **Schedule H-12** | | |
| 3 | **Accumulated Tax Deferrals** | | |
| 4 | **Base Period Ending 6/30/2026** | | |
| 5 | **Test Period Ending 9/30/2028** | | |
| 6 | **This schedule is sponsored by PNM Witness Morris** | | |
| 7 | | | |
| 8 | | | |
| 9 | | **30-Sep-27** | |
| 10 | | **Balance** | **Activity** |
| 11 | **Accumulated Deferred Income Taxes** | | |
| 12 | Federal Tax Credit Carryforward | 21,743,653 | - |
| 13 | Federal Tax Credit Carryforward - Renewables | - | - |
| 14 | Net Operating Loss (NOL) | 53,415,338 | - |
| 15 | Incentive Pay Plans | - | - |
| 16 | Regulatory Assets - Coal Mine Decommissioning | - | - |
| 17 | Regulatory Liabilities - Renewable Rider | - | - |
| 18 | Income Tax Regulatory Liability | 79,404,080 | 1,950,139 |
| 19 | Income Tax Regulatory Asset | (65,518,006) | - |
| 20 | Investment Tax Credit 2024 | 7,393,757 | - |
| 21 | Investment Tax Credit - Sandia | - | - |
| 22 | Investment Tax Credit - Sunbelt | - | - |
| 23 | Investment Tax Credit - Distribution Battery Phase 2 | - | - |
| 24 | Lease Liability | - | - |
| 25 | Deferred Credits - Coal Mine Decommissioning | - | - |
| 26 | Regulatory Assets - ETA Carrying Charges | - | - |
| 27 | Regulatory Assets - ETA Job Training & Severance | - | - |
| 28 | Regulatory Assets - ETA Payments to State Agencies | - | - |
| 29 | Regulatory Assets - ETA SJGS Plant Decommissioning | - | - |
| 30 | Regulatory Assets - ETA SJGS upfront Financing Cost | - | - |
| 31 | Regulatory Assets - ETA Westmoreland Coal Mine Sev | - | - |
| 32 | Deferred Credits - Joint Use | 106,477 | (3,549) |
| 33 | Deferred Credits - Pathnet | 1,371,531 | (1,801) |
| 34 | Deferred Credits - PVNGS Dry Casks | - | - |
| 35 | Other Deferred Credits | - | - |
| 36 | Other Liabilities - ETA Job Training and Severance | - | - |
| 37 | Other Liabilities - Navajo Workforce Training | - | - |
| 38 | Other Liabilities | - | - |
| 39 | Blackstone Transaction Costs | - | - |
| 40 | Injury and Damages | 2,058,181 | - |
| 41 | Plant - AFUDC | (44,311,810) | (335,980) |
| 42 | Plant - Capitalized Interest | 17,607,447 | - |
| 43 | Decommissioning and Reclamation Trusts | - | - |
| 44 | ASC 740-10 (FIN 48) Reclassifications | - | - |
| 45 | Estimated Tax Rate Adjustment | - | - |
| 46 | PVNGS Licensing | 844 | (281) |
| 47 | Plant - 263A Adjustment | (80,078,392) | - |
| 48 | Deferred State Taxes | - | - |
| 49 | Plant - CIAC | 26,503,887 | - |
| 50 | Plant - Depreciation Nuclear Fuel | 9,338,742 | (2,686,537) |
| 51 | Plant - Removal Cost | (4,446,299) | - |
| 52 | Plant - Repairs | (196,666,260) | (867,406) |
| 53 | Plant - Section 174 Deduction | 7,509,732 | - |
| 54 | Plant - Asset Retirement Obligation | 10,279,288 | 47,675 |

| | A | BT | BU |
|---|---|---|---|
| 1 | **Public Service Company of New Mexico** | | |
| 2 | **Schedule H-12** | | |
| 3 | **Accumulated Tax Deferrals** | | |
| 4 | **Base Period Ending 6/30/2026** | | |
| 5 | **Test Period Ending 9/30/2028** | | |
| 6 | **This schedule is sponsored by PNM Witness Morris** | | |
| 7 | | | |
| 8 | | | |
| 9 | | **30-Sep-27** | |
| 10 | | **Balance** | **Activity** |
| 55 | Plant - Pollution Control Property | (2,154,701) | - |
| 56 | Plant - Liberalized Depreciation: Production | (150,014,399) | 934,713 |
| 57 | Plant - Liberalized Depreciation: Transmission | (146,363,934) | 1,258,485 |
| 58 | Plant - Liberalized Depreciation: Distribution | (172,567,434) | (2,521,204) |
| 59 | Plant - Liberalized Depreciation: General and Intangible | (12,302,903) | 1,005,573 |
| 60 | Plant - Liberalized Depreciation: Grid Mod | (14,179,704) | (729,594) |
| 61 | Plant - Liberalized Depreciation: Renewables | (46,828,494) | 28,135 |
| 62 | Plant - Four Corners Imprudence | - | - |
| 63 | Regulatory Assets - SJGS Stranded Costs Units 2&3 | (16,474,881) | 132,862 |
| 64 | Pension | (37,819,467) | 90,669 |
| 65 | Retiree Medical | - | - |
| 66 | Lease Asset | - | - |
| 67 | Loss on Reacquired Debt | (867,604) | 8,293 |
| 68 | Other Comprehensive Income (OCI) | - | - |
| 69 | Deferred Credits - SO2 Allowance | - | - |
| 70 | Deferred Debits - Rate Case Expense | (1,050,798) | 17,513 |
| 71 | Deferred Debits - Decoupling | - | - |
| 72 | Deferred Debits - Grid Modernization | - | - |
| 73 | Deferred Debits - RR Underground Rider | - | - |
| 74 | Energy Storage Agreement | (7,788,584) | 32,452 |
| 75 | Energy Transition Charges | - | - |
| 76 | Prepaid Expenses | (1,168,330) | - |
| 77 | Regulatory Assets - 2024 COVID Bad Debt | - | - |
| 78 | Regulatory Assets - COVID-19 Costs | (120,221) | 5,009 |
| 79 | Regulatory Assets - Community Solar | (902,756) | 13,122 |
| 80 | Regulatory assets - FAC | 0 | - |
| 81 | Regulatory Assets - EDAM Costs | (786,981) | 13,116 |
| 82 | Regulatory Assets - EIM Costs | (1,232,983) | 79,547 |
| 83 | Regulatory Assets - Energy Efficiency | (129,051) | 2,151 |
| 84 | Regulatory Assets - ETA | - | - |
| 85 | Regulatory Assets - FERC 893 Cyber | - | - |
| 86 | Regulatory Assets - IRP | (45,483) | 758 |
| 87 | Regulatory Assets - Sky Blue Under Recovery | - | - |
| 88 | Regulatory Assets - Renewable Energy | 2,581,654 | (24,267) |
| 89 | Regulatory Assets - Renewable Energy Credits | (78,530) | - |
| 90 | Regulatory Assets - SJGS External Legal Fees | (107,044) | 419 |
| 91 | Regulatory Assets - SJGS Final ETA Depcom | - | - |
| 92 | Regulatory Assets - SJGS Final ETA Mine Rec | - | - |
| 93 | Regulatory Assets - SJGS Replacement Resources | (1,799,494) | 7,043 |
| 94 | Regulatory Assets - SJGS Undepreciated Investment | - | - |
| 95 | Regulatory Assets - SJGS Underground Coal Mine | - | - |
| 96 | Regulatory Assets - Solar Direct Regulatory Assets | - | - |
| 97 | Regulatory Assets - TOD Rate Pilot Program | (784,797) | 13,080 |
| 98 | Regulatory Assets - Transportation Electrification | - | - |

| | A | BT | BU |
|---|---|---|---|
| 1 | **Public Service Company of New Mexico** | | |
| 2 | **Schedule H-12** | | |
| 3 | **Accumulated Tax Deferrals** | | |
| 4 | **Base Period Ending 6/30/2026** | | |
| 5 | **Test Period Ending 9/30/2028** | | |
| 6 | **This schedule is sponsored by PNM Witness Morris** | | |
| 7 | | | |
| 8 | | | |
| 9 | | **30-Sep-27** | |
| 10 | | **Balance** | **Activity** |
| 99 | Regulatory Assets - WCC Transaction Costs | - | - |
| 100 | Regulatory Liabilities - Energy Efficiency | - | - |
| 101 | Regulatory Liabilities - FAC | - | - |
| 102 | Regulatory Assets - PCB Refinancing Hedge | (1,445,874) | 17,874 |
| 103 | Prepaid Expenses: Production | (445,840) | - |
| 104 | Prepaid Expenses: Transmission | (1,849,743) | - |
| 105 | Prepaid Expenses: Transmission (incremental FERC Rates) | - | - |
| 106 | Prepaid Expenses: Distribution | (135,016) | - |
| 107 | Prepaid Expenses: Renewables | - | - |
| 108 | Regulatory Assets - 2024 Rate Change | (317,019) | 20,453 |
| 109 | Regulatory Assets - 2025 Rate Change | (281,824) | 8,540 |
| 110 | Regulatory Assets - SJGS Obsolete Inventory | (1,361,678) | 5,329 |
| 111 | Regulatory Liabilities - Earnings Test | - | - |
| 112 | Regulatory Assets - PVNGS Lease costs | (5,072) | 423 |
| 113 | Regulatory Assets - PVNGS Undepreciated Investment | (9,567,971) | 48,942 |
| 114 | Regulatory Assets - ETC Over/Under SPE | - | - |
| 115 | Regulatory Assets - PVNGS Replacement Resources | (428,888) | 2,194 |
| 116 | Regulatory Assets - Rate Rider 12 UG Rate | - | - |
| 117 | Regulatory Assets - Renewable Rider Curr Reg | - | - |
| 118 | Regulatory Assets - SJ Energy Transition Property (SPE) | (78,579,578) | 273,415 |
| 119 | Regulatory Liabilities - Curr Reg Liab-UG Rate Rider 12 | - | - |
| 120 | Regulatory Liabilities - ITC Sandia | 7,087,254 | (118,121) |
| 121 | Regulatory Liabilities - ITC Sunbelt | - | - |
| 122 | Regulatory Liabilities - ITC - Distribution Battery Phase 2 | - | - |
| 123 | Regulatory Liabilities - Energy Transition Cost True Up | 279,551 | (1,114) |
| 124 | Regulatory Liabilities - SJGS Retirements Rate Credit | 23,805 | (1,984) |
| 125 | Regulatory Liabilities - PVNGS Lease Costs | - | - |
| 126 | Deferred Debits - WS-Transmission Revenue | - | - |
| 127 | Customer Advance | - | - |
| 128 | Deferred Credits - ETA | - | - |
| 129 | Other Liabilities - ETA Coal Mine Severance | - | - |
| 130 | Other Liabilities - ETA State Agency Payments | - | - |
| 131 | SJGS County Ordinance Decommission | - | - |
| 132 | | | |
| 133 | **Total Accumulated Deferred Income Taxes** | (854,302,623) | (1,273,910) |
| 134 | | | |
| 135 | General Ledger ADIT Balance | | |
| 136 | | | |
| 137 | Difference (Rounding) | | |

| | A | BV | BW |
|---|---|---|---|
| 1 | **Public Service Company of New Mexico** | | |
| 2 | **Schedule H-12** | | |
| 3 | **Accumulated Tax Deferrals** | | |
| 4 | **Base Period Ending 6/30/2026** | | |
| 5 | **Test Period Ending 9/30/2028** | | |
| 6 | **This schedule is sponsored by PNM Witness Morris** | | |
| 7 | | | |
| 8 | | | |
| 9 | | **31-Oct-27** | |
| 10 | | **Balance** | **Activity** |
| 11 | **Accumulated Deferred Income Taxes** | | |
| 12 | Federal Tax Credit Carryforward | 21,743,653 | - |
| 13 | Federal Tax Credit Carryforward - Renewables | - | - |
| 14 | Net Operating Loss (NOL) | 53,415,338 | - |
| 15 | Incentive Pay Plans | - | - |
| 16 | Regulatory Assets - Coal Mine Decommissioning | - | - |
| 17 | Regulatory Liabilities - Renewable Rider | - | - |
| 18 | Income Tax Regulatory Liability | 81,354,219 | 1,950,139 |
| 19 | Income Tax Regulatory Asset | (65,518,006) | - |
| 20 | Investment Tax Credit 2024 | 7,393,757 | - |
| 21 | Investment Tax Credit - Sandia | - | - |
| 22 | Investment Tax Credit - Sunbelt | - | - |
| 23 | Investment Tax Credit - Distribution Battery Phase 2 | - | 27,099,468 |
| 24 | Lease Liability | - | - |
| 25 | Deferred Credits - Coal Mine Decommissioning | - | - |
| 26 | Regulatory Assets - ETA Carrying Charges | - | - |
| 27 | Regulatory Assets - ETA Job Training & Severance | - | - |
| 28 | Regulatory Assets - ETA Payments to State Agencies | - | - |
| 29 | Regulatory Assets - ETA SJGS Plant Decommissioning | - | - |
| 30 | Regulatory Assets - ETA SJGS upfront Financing Cost | - | - |
| 31 | Regulatory Assets - ETA Westmoreland Coal Mine Sev | - | - |
| 32 | Deferred Credits - Joint Use | 102,927 | (3,549) |
| 33 | Deferred Credits - Pathnet | 1,369,729 | (1,801) |
| 34 | Deferred Credits - PVNGS Dry Casks | - | - |
| 35 | Other Deferred Credits | - | - |
| 36 | Other Liabilities - ETA Job Training and Severance | - | - |
| 37 | Other Liabilities - Navajo Workforce Training | - | - |
| 38 | Other Liabilities | - | - |
| 39 | Blackstone Transaction Costs | - | - |
| 40 | Injury and Damages | 2,058,181 | - |
| 41 | Plant - AFUDC | (44,647,789) | (347,669) |
| 42 | Plant - Capitalized Interest | 17,607,447 | - |
| 43 | Decommissioning and Reclamation Trusts | - | - |
| 44 | ASC 740-10 (FIN 48) Reclassifications | - | - |
| 45 | Estimated Tax Rate Adjustment | - | - |
| 46 | PVNGS Licensing | 562 | (281) |
| 47 | Plant - 263A Adjustment | (80,078,392) | - |
| 48 | Deferred State Taxes | - | - |
| 49 | Plant - CIAC | 26,503,887 | - |
| 50 | Plant - Depreciation Nuclear Fuel | 6,652,204 | 2,292,851 |
| 51 | Plant - Removal Cost | (4,446,299) | - |
| 52 | Plant - Repairs | (197,533,666) | (1,349,008) |
| 53 | Plant - Section 174 Deduction | 7,509,732 | - |
| 54 | Plant - Asset Retirement Obligation | 10,326,963 | 47,926 |

| | A | BV | BW |
|---|---|---|---|
| 1 | **Public Service Company of New Mexico** | | |
| 2 | **Schedule H-12** | | |
| 3 | **Accumulated Tax Deferrals** | | |
| 4 | **Base Period Ending 6/30/2026** | | |
| 5 | **Test Period Ending 9/30/2028** | | |
| 6 | **This schedule is sponsored by PNM Witness Morris** | | |
| 7 | | | |
| 8 | | | |
| 9 | | **31-Oct-27** | |
| 10 | | **Balance** | **Activity** |
| 55 | Plant - Pollution Control Property | (2,154,701) | - |
| 56 | Plant - Liberalized Depreciation: Production | (149,079,686) | 681,667 |
| 57 | Plant - Liberalized Depreciation: Transmission | (145,105,448) | 1,265,235 |
| 58 | Plant - Liberalized Depreciation: Distribution | (175,088,638) | 491,043 |
| 59 | Plant - Liberalized Depreciation: General and Intangible | (11,297,329) | (2,003,412) |
| 60 | Plant - Liberalized Depreciation: Grid Mod | (14,909,297) | (341,239) |
| 61 | Plant - Liberalized Depreciation: Renewables | (46,800,359) | (41,025) |
| 62 | Plant - Four Corners Imprudence | - | - |
| 63 | Regulatory Assets - SJGS Stranded Costs Units 2&3 | (16,342,019) | 132,862 |
| 64 | Pension | (37,728,798) | 90,669 |
| 65 | Retiree Medical | - | - |
| 66 | Lease Asset | - | - |
| 67 | Loss on Reacquired Debt | (859,311) | 8,293 |
| 68 | Other Comprehensive Income (OCI) | - | - |
| 69 | Deferred Credits - SO2 Allowance | - | - |
| 70 | Deferred Debits - Rate Case Expense | (1,033,285) | 17,513 |
| 71 | Deferred Debits - Decoupling | - | - |
| 72 | Deferred Debits - Grid Modernization | - | - |
| 73 | Deferred Debits - RR Underground Rider | - | - |
| 74 | Energy Storage Agreement | (7,756,132) | 32,452 |
| 75 | Energy Transition Charges | - | - |
| 76 | Prepaid Expenses | (1,168,330) | - |
| 77 | Regulatory Assets - 2024 COVID Bad Debt | - | - |
| 78 | Regulatory Assets - COVID-19 Costs | (115,212) | 5,009 |
| 79 | Regulatory Assets - Community Solar | (889,634) | 13,122 |
| 80 | Regulatory assets - FAC | 0 | - |
| 81 | Regulatory Assets - EDAM Costs | (773,865) | 13,116 |
| 82 | Regulatory Assets - EIM Costs | (1,153,436) | 79,547 |
| 83 | Regulatory Assets - Energy Efficiency | (126,900) | 2,151 |
| 84 | Regulatory Assets - ETA | - | - |
| 85 | Regulatory Assets - FERC 893 Cyber | - | - |
| 86 | Regulatory Assets - IRP | (44,725) | 758 |
| 87 | Regulatory Assets - Sky Blue Under Recovery | - | - |
| 88 | Regulatory Assets - Renewable Energy | 2,557,387 | (24,267) |
| 89 | Regulatory Assets - Renewable Energy Credits | (78,530) | - |
| 90 | Regulatory Assets - SJGS External Legal Fees | (106,625) | 419 |
| 91 | Regulatory Assets - SJGS Final ETA Depcom | - | - |
| 92 | Regulatory Assets - SJGS Final ETA Mine Rec | - | - |
| 93 | Regulatory Assets - SJGS Replacement Resources | (1,792,451) | 7,043 |
| 94 | Regulatory Assets - SJGS Undepreciated Investment | - | - |
| 95 | Regulatory Assets - SJGS Underground Coal Mine | - | - |
| 96 | Regulatory Assets - Solar Direct Regulatory Assets | - | - |
| 97 | Regulatory Assets - TOD Rate Pilot Program | (771,717) | 13,080 |
| 98 | Regulatory Assets - Transportation Electrification | - | - |

| | A | BV | BW |
|---|---|---|---|
| 1 | **Public Service Company of New Mexico** | | |
| 2 | **Schedule H-12** | | |
| 3 | **Accumulated Tax Deferrals** | | |
| 4 | **Base Period Ending 6/30/2026** | | |
| 5 | **Test Period Ending 9/30/2028** | | |
| 6 | **This schedule is sponsored by PNM Witness Morris** | | |
| 7 | | | |
| 8 | | | |
| 9 | | **31-Oct-27** | |
| 10 | | **Balance** | **Activity** |
| 99 | Regulatory Assets - WCC Transaction Costs | - | - |
| 100 | Regulatory Liabilities - Energy Efficiency | - | - |
| 101 | Regulatory Liabilities - FAC | - | - |
| 102 | Regulatory Assets - PCB Refinancing Hedge | (1,428,000) | 17,874 |
| 103 | Prepaid Expenses: Production | (445,840) | - |
| 104 | Prepaid Expenses: Transmission | (1,849,743) | - |
| 105 | Prepaid Expenses: Transmission (incremental FERC Rates) | - | - |
| 106 | Prepaid Expenses: Distribution | (135,016) | - |
| 107 | Prepaid Expenses: Renewables | - | - |
| 108 | Regulatory Assets - 2024 Rate Change | (296,566) | 20,453 |
| 109 | Regulatory Assets - 2025 Rate Change | (273,283) | 8,540 |
| 110 | Regulatory Assets - SJGS Obsolete Inventory | (1,356,348) | 5,329 |
| 111 | Regulatory Liabilities - Earnings Test | - | - |
| 112 | Regulatory Assets - PVNGS Lease costs | (4,649) | 423 |
| 113 | Regulatory Assets - PVNGS Undepreciated Investment | (9,519,029) | 48,942 |
| 114 | Regulatory Assets - ETC Over/Under SPE | - | - |
| 115 | Regulatory Assets - PVNGS Replacement Resources | (426,694) | 2,194 |
| 116 | Regulatory Assets - Rate Rider 12 UG Rate | - | - |
| 117 | Regulatory Assets - Renewable Rider Curr Reg | - | - |
| 118 | Regulatory Assets - SJ Energy Transition Property (SPE) | (78,306,163) | 273,415 |
| 119 | Regulatory Liabilities - Curr Reg Liab-UG Rate Rider 12 | - | - |
| 120 | Regulatory Liabilities - ITC Sandia | 6,969,133 | (118,121) |
| 121 | Regulatory Liabilities - ITC Sunbelt | - | - |
| 122 | Regulatory Liabilities - ITC - Distribution Battery Phase 2 | - | - |
| 123 | Regulatory Liabilities - Energy Transition Cost True Up | 278,437 | (1,114) |
| 124 | Regulatory Liabilities - SJGS Retirements Rate Credit | 21,821 | (1,984) |
| 125 | Regulatory Liabilities - PVNGS Lease Costs | - | - |
| 126 | Deferred Debits - WS-Transmission Revenue | - | - |
| 127 | Customer Advance | - | - |
| 128 | Deferred Credits - ETA | - | - |
| 129 | Other Liabilities - ETA Coal Mine Severance | - | - |
| 130 | Other Liabilities - ETA State Agency Payments | - | - |
| 131 | SJGS County Ordinance Decommission | - | - |
| 132 | | | |
| 133 | **Total Accumulated Deferred Income Taxes** | (855,576,533) | 30,388,066 |
| 134 | | | |
| 135 | General Ledger ADIT Balance | | |
| 136 | | | |
| 137 | Difference (Rounding) | | |

| | A | BX | BY |
|---|---|---|---|
| 1 | **Public Service Company of New Mexico** | | |
| 2 | **Schedule H-12** | | |
| 3 | **Accumulated Tax Deferrals** | | |
| 4 | **Base Period Ending 6/30/2026** | | |
| 5 | **Test Period Ending 9/30/2028** | | |
| 6 | **This schedule is sponsored by PNM Witness Morris** | | |
| 7 | | | |
| 8 | | | |
| 9 | | **30-Nov-27** | |
| 10 | | **Balance** | **Activity** |
| 11 | **Accumulated Deferred Income Taxes** | | |
| 12 | Federal Tax Credit Carryforward | 21,743,653 | - |
| 13 | Federal Tax Credit Carryforward - Renewables | - | - |
| 14 | Net Operating Loss (NOL) | 53,415,338 | - |
| 15 | Incentive Pay Plans | - | - |
| 16 | Regulatory Assets - Coal Mine Decommissioning | - | - |
| 17 | Regulatory Liabilities - Renewable Rider | - | - |
| 18 | Income Tax Regulatory Liability | 83,304,358 | 1,950,139 |
| 19 | Income Tax Regulatory Asset | (65,518,006) | - |
| 20 | Investment Tax Credit 2024 | 7,393,757 | - |
| 21 | Investment Tax Credit - Sandia | - | - |
| 22 | Investment Tax Credit - Sunbelt | - | - |
| 23 | Investment Tax Credit - Distribution Battery Phase 2 | 27,099,468 | (27,099,468) |
| 24 | Lease Liability | - | - |
| 25 | Deferred Credits - Coal Mine Decommissioning | - | - |
| 26 | Regulatory Assets - ETA Carrying Charges | - | - |
| 27 | Regulatory Assets - ETA Job Training & Severance | - | - |
| 28 | Regulatory Assets - ETA Payments to State Agencies | - | - |
| 29 | Regulatory Assets - ETA SJGS Plant Decommissioning | - | - |
| 30 | Regulatory Assets - ETA SJGS upfront Financing Cost | - | - |
| 31 | Regulatory Assets - ETA Westmoreland Coal Mine Sev | - | - |
| 32 | Deferred Credits - Joint Use | 99,378 | (3,549) |
| 33 | Deferred Credits - Pathnet | 1,367,928 | (1,801) |
| 34 | Deferred Credits - PVNGS Dry Casks | - | - |
| 35 | Other Deferred Credits | - | - |
| 36 | Other Liabilities - ETA Job Training and Severance | - | - |
| 37 | Other Liabilities - Navajo Workforce Training | - | - |
| 38 | Other Liabilities | - | - |
| 39 | Blackstone Transaction Costs | - | - |
| 40 | Injury and Damages | 2,058,181 | - |
| 41 | Plant - AFUDC | (44,995,458) | (374,357) |
| 42 | Plant - Capitalized Interest | 17,607,447 | - |
| 43 | Decommissioning and Reclamation Trusts | - | - |
| 44 | ASC 740-10 (FIN 48) Reclassifications | - | - |
| 45 | Estimated Tax Rate Adjustment | - | - |
| 46 | PVNGS Licensing | 281 | (281) |
| 47 | Plant - 263A Adjustment | (80,078,392) | - |
| 48 | Deferred State Taxes | - | - |
| 49 | Plant - CIAC | 26,503,887 | - |
| 50 | Plant - Depreciation Nuclear Fuel | 8,945,055 | (55,821) |
| 51 | Plant - Removal Cost | (4,446,299) | - |
| 52 | Plant - Repairs | (198,882,674) | (7,014,829) |
| 53 | Plant - Section 174 Deduction | 7,509,732 | - |
| 54 | Plant - Asset Retirement Obligation | 10,374,889 | 48,179 |

| | A | BX | BY |
|---|---|---|---|
| 1 | **Public Service Company of New Mexico** | | |
| 2 | **Schedule H-12** | | |
| 3 | **Accumulated Tax Deferrals** | | |
| 4 | **Base Period Ending 6/30/2026** | | |
| 5 | **Test Period Ending 9/30/2028** | | |
| 6 | **This schedule is sponsored by PNM Witness Morris** | | |
| 7 | | | |
| 8 | | | |
| 9 | | **30-Nov-27** | |
| 10 | | **Balance** | **Activity** |
| 55 | Plant - Pollution Control Property | (2,154,701) | - |
| 56 | Plant - Liberalized Depreciation: Production | (148,398,019) | 205,651 |
| 57 | Plant - Liberalized Depreciation: Transmission | (143,840,213) | (377,310) |
| 58 | Plant - Liberalized Depreciation: Distribution | (174,597,595) | (880,916) |
| 59 | Plant - Liberalized Depreciation: General and Intangible | (13,300,741) | 975,967 |
| 60 | Plant - Liberalized Depreciation: Grid Mod | (15,250,536) | 15,845 |
| 61 | Plant - Liberalized Depreciation: Renewables | (46,841,383) | 187,037 |
| 62 | Plant - Four Corners Imprudence | - | - |
| 63 | Regulatory Assets - SJGS Stranded Costs Units 2&3 | (16,209,157) | 132,862 |
| 64 | Pension | (37,638,129) | 90,669 |
| 65 | Retiree Medical | - | - |
| 66 | Lease Asset | - | - |
| 67 | Loss on Reacquired Debt | (851,018) | 8,293 |
| 68 | Other Comprehensive Income (OCI) | - | - |
| 69 | Deferred Credits - SO2 Allowance | - | - |
| 70 | Deferred Debits - Rate Case Expense | (1,015,771) | 17,513 |
| 71 | Deferred Debits - Decoupling | - | - |
| 72 | Deferred Debits - Grid Modernization | - | - |
| 73 | Deferred Debits - RR Underground Rider | - | - |
| 74 | Energy Storage Agreement | (7,723,680) | 32,452 |
| 75 | Energy Transition Charges | - | - |
| 76 | Prepaid Expenses | (1,168,330) | - |
| 77 | Regulatory Assets - 2024 COVID Bad Debt | - | - |
| 78 | Regulatory Assets - COVID-19 Costs | (110,202) | 5,009 |
| 79 | Regulatory Assets - Community Solar | (876,512) | 13,122 |
| 80 | Regulatory assets - FAC | 0 | - |
| 81 | Regulatory Assets - EDAM Costs | (760,748) | 13,116 |
| 82 | Regulatory Assets - EIM Costs | (1,073,889) | 79,547 |
| 83 | Regulatory Assets - Energy Efficiency | (124,749) | 2,151 |
| 84 | Regulatory Assets - ETA | - | - |
| 85 | Regulatory Assets - FERC 893 Cyber | - | - |
| 86 | Regulatory Assets - IRP | (43,967) | 758 |
| 87 | Regulatory Assets - Sky Blue Under Recovery | - | - |
| 88 | Regulatory Assets - Renewable Energy | 2,533,120 | (24,267) |
| 89 | Regulatory Assets - Renewable Energy Credits | (78,530) | - |
| 90 | Regulatory Assets - SJGS External Legal Fees | (106,206) | 419 |
| 91 | Regulatory Assets - SJGS Final ETA Depcom | - | - |
| 92 | Regulatory Assets - SJGS Final ETA Mine Rec | - | - |
| 93 | Regulatory Assets - SJGS Replacement Resources | (1,785,408) | 7,043 |
| 94 | Regulatory Assets - SJGS Undepreciated Investment | - | - |
| 95 | Regulatory Assets - SJGS Underground Coal Mine | - | - |
| 96 | Regulatory Assets - Solar Direct Regulatory Assets | - | - |
| 97 | Regulatory Assets - TOD Rate Pilot Program | (758,637) | 13,080 |
| 98 | Regulatory Assets - Transportation Electrification | - | - |

| | A | BX | BY |
|---|---|---|---|
| 1 | **Public Service Company of New Mexico** | | |
| 2 | **Schedule H-12** | | |
| 3 | **Accumulated Tax Deferrals** | | |
| 4 | **Base Period Ending 6/30/2026** | | |
| 5 | **Test Period Ending 9/30/2028** | | |
| 6 | **This schedule is sponsored by PNM Witness Morris** | | |
| 7 | | | |
| 8 | | | |
| 9 | | **30-Nov-27** | |
| 10 | | **Balance** | **Activity** |
| 99 | Regulatory Assets - WCC Transaction Costs | - | - |
| 100 | Regulatory Liabilities - Energy Efficiency | - | - |
| 101 | Regulatory Liabilities - FAC | - | - |
| 102 | Regulatory Assets - PCB Refinancing Hedge | (1,410,126) | 17,874 |
| 103 | Prepaid Expenses: Production | (445,840) | - |
| 104 | Prepaid Expenses: Transmission | (1,849,743) | - |
| 105 | Prepaid Expenses: Transmission (incremental FERC Rates) | - | - |
| 106 | Prepaid Expenses: Distribution | (135,016) | - |
| 107 | Prepaid Expenses: Renewables | - | - |
| 108 | Regulatory Assets - 2024 Rate Change | (276,113) | 20,453 |
| 109 | Regulatory Assets - 2025 Rate Change | (264,743) | 8,540 |
| 110 | Regulatory Assets - SJGS Obsolete Inventory | (1,351,019) | 5,329 |
| 111 | Regulatory Liabilities - Earnings Test | - | - |
| 112 | Regulatory Assets - PVNGS Lease costs | (4,227) | 423 |
| 113 | Regulatory Assets - PVNGS Undepreciated Investment | (9,470,087) | 48,942 |
| 114 | Regulatory Assets - ETC Over/Under SPE | - | - |
| 115 | Regulatory Assets - PVNGS Replacement Resources | (424,500) | 2,194 |
| 116 | Regulatory Assets - Rate Rider 12 UG Rate | - | - |
| 117 | Regulatory Assets - Renewable Rider Curr Reg | - | - |
| 118 | Regulatory Assets - SJ Energy Transition Property (SPE) | (78,032,748) | 273,415 |
| 119 | Regulatory Liabilities - Curr Reg Liab-UG Rate Rider 12 | - | - |
| 120 | Regulatory Liabilities - ITC Sandia | 6,851,012 | (118,121) |
| 121 | Regulatory Liabilities - ITC Sunbelt | - | - |
| 122 | Regulatory Liabilities - ITC - Distribution Battery Phase 2 | - | 5,988,441 |
| 123 | Regulatory Liabilities - Energy Transition Cost True Up | 277,324 | (1,114) |
| 124 | Regulatory Liabilities - SJGS Retirements Rate Credit | 19,837 | (1,984) |
| 125 | Regulatory Liabilities - PVNGS Lease Costs | - | - |
| 126 | Deferred Debits - WS-Transmission Revenue | - | - |
| 127 | Customer Advance | - | - |
| 128 | Deferred Credits - ETA | - | - |
| 129 | Other Liabilities - ETA Coal Mine Severance | - | - |
| 130 | Other Liabilities - ETA State Agency Payments | - | - |
| 131 | SJGS County Ordinance Decommission | - | - |
| 132 | | | |
| 133 | **Total Accumulated Deferred Income Taxes** | (825,188,467) | (25,789,354) |
| 134 | | | |
| 135 | General Ledger ADIT Balance | | |
| 136 | | | |
| 137 | Difference (Rounding) | | |

| | A | BZ | CA |
|---|---|---|---|
| 1 | **Public Service Company of New Mexico** | | |
| 2 | **Schedule H-12** | | |
| 3 | **Accumulated Tax Deferrals** | | |
| 4 | **Base Period Ending 6/30/2026** | | |
| 5 | **Test Period Ending 9/30/2028** | | |
| 6 | **This schedule is sponsored by PNM Witness Morris** | | |
| 7 | | | |
| 8 | | | |
| 9 | | **31-Dec-27** | |
| 10 | | **Balance** | **Activity** |
| 11 | **Accumulated Deferred Income Taxes** | | |
| 12 | Federal Tax Credit Carryforward | 21,743,653 | - |
| 13 | Federal Tax Credit Carryforward - Renewables | - | - |
| 14 | Net Operating Loss (NOL) | 53,415,338 | - |
| 15 | Incentive Pay Plans | - | - |
| 16 | Regulatory Assets - Coal Mine Decommissioning | - | - |
| 17 | Regulatory Liabilities - Renewable Rider | - | - |
| 18 | Income Tax Regulatory Liability | 85,254,497 | 1,950,139 |
| 19 | Income Tax Regulatory Asset | (65,518,006) | - |
| 20 | Investment Tax Credit 2024 | 7,393,757 | - |
| 21 | Investment Tax Credit - Sandia | - | - |
| 22 | Investment Tax Credit - Sunbelt | - | - |
| 23 | Investment Tax Credit - Distribution Battery Phase 2 | - | - |
| 24 | Lease Liability | - | - |
| 25 | Deferred Credits - Coal Mine Decommissioning | - | - |
| 26 | Regulatory Assets - ETA Carrying Charges | - | - |
| 27 | Regulatory Assets - ETA Job Training & Severance | - | - |
| 28 | Regulatory Assets - ETA Payments to State Agencies | - | - |
| 29 | Regulatory Assets - ETA SJGS Plant Decommissioning | - | - |
| 30 | Regulatory Assets - ETA SJGS upfront Financing Cost | - | - |
| 31 | Regulatory Assets - ETA Westmoreland Coal Mine Sev | - | - |
| 32 | Deferred Credits - Joint Use | 95,829 | (3,549) |
| 33 | Deferred Credits - Pathnet | 1,366,127 | (1,801) |
| 34 | Deferred Credits - PVNGS Dry Casks | - | - |
| 35 | Other Deferred Credits | - | - |
| 36 | Other Liabilities - ETA Job Training and Severance | - | - |
| 37 | Other Liabilities - Navajo Workforce Training | - | - |
| 38 | Other Liabilities | - | - |
| 39 | Blackstone Transaction Costs | - | - |
| 40 | Injury and Damages | 2,058,181 | - |
| 41 | Plant - AFUDC | (45,369,816) | (304,693) |
| 42 | Plant - Capitalized Interest | 17,607,447 | - |
| 43 | Decommissioning and Reclamation Trusts | - | - |
| 44 | ASC 740-10 (FIN 48) Reclassifications | - | - |
| 45 | Estimated Tax Rate Adjustment | - | - |
| 46 | PVNGS Licensing | 0 | - |
| 47 | Plant - 263A Adjustment | (80,078,392) | - |
| 48 | Deferred State Taxes | - | - |
| 49 | Plant - CIAC | 26,503,887 | - |
| 50 | Plant - Depreciation Nuclear Fuel | 8,889,234 | 85,379 |
| 51 | Plant - Removal Cost | (4,446,299) | - |
| 52 | Plant - Repairs | (205,897,502) | (1,209,271) |
| 53 | Plant - Section 174 Deduction | 7,509,732 | - |
| 54 | Plant - Asset Retirement Obligation | 10,423,068 | 46,674 |

| | A | BZ | CA |
|---|---|---|---|
| 1 | **Public Service Company of New Mexico** | | |
| 2 | **Schedule H-12** | | |
| 3 | **Accumulated Tax Deferrals** | | |
| 4 | **Base Period Ending 6/30/2026** | | |
| 5 | **Test Period Ending 9/30/2028** | | |
| 6 | **This schedule is sponsored by PNM Witness Morris** | | |
| 7 | | | |
| 8 | | | |
| 9 | | **31-Dec-27** | |
| 10 | | **Balance** | **Activity** |
| 55 | Plant - Pollution Control Property | (2,154,701) | - |
| 56 | Plant - Liberalized Depreciation: Production | (148,192,368) | 871,460 |
| 57 | Plant - Liberalized Depreciation: Transmission | (144,217,523) | (269,353) |
| 58 | Plant - Liberalized Depreciation: Distribution | (175,478,511) | (1,363,604) |
| 59 | Plant - Liberalized Depreciation: General and Intangible | (12,324,774) | 985,473 |
| 60 | Plant - Liberalized Depreciation: Grid Mod | (15,234,691) | (1,777,169) |
| 61 | Plant - Liberalized Depreciation: Renewables | (46,654,347) | 192,588 |
| 62 | Plant - Four Corners Imprudence | - | - |
| 63 | Regulatory Assets - SJGS Stranded Costs Units 2&3 | (16,076,295) | 132,862 |
| 64 | Pension | (37,547,461) | 129,031 |
| 65 | Retiree Medical | - | - |
| 66 | Lease Asset | - | - |
| 67 | Loss on Reacquired Debt | (842,725) | 8,293 |
| 68 | Other Comprehensive Income (OCI) | - | - |
| 69 | Deferred Credits - SO2 Allowance | - | - |
| 70 | Deferred Debits - Rate Case Expense | (998,258) | 17,513 |
| 71 | Deferred Debits - Decoupling | - | - |
| 72 | Deferred Debits - Grid Modernization | - | - |
| 73 | Deferred Debits - RR Underground Rider | - | - |
| 74 | Energy Storage Agreement | (7,691,227) | 32,452 |
| 75 | Energy Transition Charges | - | - |
| 76 | Prepaid Expenses | (1,168,330) | - |
| 77 | Regulatory Assets - 2024 COVID Bad Debt | - | - |
| 78 | Regulatory Assets - COVID-19 Costs | (105,193) | 5,009 |
| 79 | Regulatory Assets - Community Solar | (863,389) | 13,122 |
| 80 | Regulatory assets - FAC | 0 | - |
| 81 | Regulatory Assets - EDAM Costs | (747,632) | 13,116 |
| 82 | Regulatory Assets - EIM Costs | (994,341) | 79,547 |
| 83 | Regulatory Assets - Energy Efficiency | (122,599) | 2,151 |
| 84 | Regulatory Assets - ETA | - | - |
| 85 | Regulatory Assets - FERC 893 Cyber | - | - |
| 86 | Regulatory Assets - IRP | (43,209) | 758 |
| 87 | Regulatory Assets - Sky Blue Under Recovery | - | - |
| 88 | Regulatory Assets - Renewable Energy | 2,508,854 | (24,267) |
| 89 | Regulatory Assets - Renewable Energy Credits | (78,530) | - |
| 90 | Regulatory Assets - SJGS External Legal Fees | (105,787) | 419 |
| 91 | Regulatory Assets - SJGS Final ETA Depcom | - | - |
| 92 | Regulatory Assets - SJGS Final ETA Mine Rec | - | - |
| 93 | Regulatory Assets - SJGS Replacement Resources | (1,778,365) | 7,043 |
| 94 | Regulatory Assets - SJGS Undepreciated Investment | - | - |
| 95 | Regulatory Assets - SJGS Underground Coal Mine | - | - |
| 96 | Regulatory Assets - Solar Direct Regulatory Assets | - | - |
| 97 | Regulatory Assets - TOD Rate Pilot Program | (745,558) | 13,080 |
| 98 | Regulatory Assets - Transportation Electrification | - | - |

| | A | BZ | CA |
|---|---|---|---|
| 1 | **Public Service Company of New Mexico** | | |
| 2 | **Schedule H-12** | | |
| 3 | **Accumulated Tax Deferrals** | | |
| 4 | **Base Period Ending 6/30/2026** | | |
| 5 | **Test Period Ending 9/30/2028** | | |
| 6 | **This schedule is sponsored by PNM Witness Morris** | | |
| 7 | | | |
| 8 | | | |
| 9 | | **31-Dec-27** | |
| 10 | | **Balance** | **Activity** |
| 99 | Regulatory Assets - WCC Transaction Costs | - | - |
| 100 | Regulatory Liabilities - Energy Efficiency | - | - |
| 101 | Regulatory Liabilities - FAC | - | - |
| 102 | Regulatory Assets - PCB Refinancing Hedge | (1,392,252) | 17,874 |
| 103 | Prepaid Expenses: Production | (445,840) | - |
| 104 | Prepaid Expenses: Transmission | (1,849,743) | - |
| 105 | Prepaid Expenses: Transmission (incremental FERC Rates) | - | - |
| 106 | Prepaid Expenses: Distribution | (135,016) | - |
| 107 | Prepaid Expenses: Renewables | - | - |
| 108 | Regulatory Assets - 2024 Rate Change | (255,660) | 20,453 |
| 109 | Regulatory Assets - 2025 Rate Change | (256,203) | 8,540 |
| 110 | Regulatory Assets - SJGS Obsolete Inventory | (1,345,690) | 5,329 |
| 111 | Regulatory Liabilities - Earnings Test | - | - |
| 112 | Regulatory Assets - PVNGS Lease costs | (3,804) | 423 |
| 113 | Regulatory Assets - PVNGS Undepreciated Investment | (9,421,145) | 48,942 |
| 114 | Regulatory Assets - ETC Over/Under SPE | - | - |
| 115 | Regulatory Assets - PVNGS Replacement Resources | (422,306) | 2,194 |
| 116 | Regulatory Assets - Rate Rider 12 UG Rate | - | - |
| 117 | Regulatory Assets - Renewable Rider Curr Reg | - | - |
| 118 | Regulatory Assets - SJ Energy Transition Property (SPE) | (77,759,332) | 273,415 |
| 119 | Regulatory Liabilities - Curr Reg Liab-UG Rate Rider 12 | - | - |
| 120 | Regulatory Liabilities - ITC Sandia | 6,732,891 | (118,121) |
| 121 | Regulatory Liabilities - ITC Sunbelt | - | - |
| 122 | Regulatory Liabilities - ITC - Distribution Battery Phase 2 | 5,988,441 | (99,807) |
| 123 | Regulatory Liabilities - Energy Transition Cost True Up | 276,210 | (1,114) |
| 124 | Regulatory Liabilities - SJGS Retirements Rate Credit | 17,854 | (1,984) |
| 125 | Regulatory Liabilities - PVNGS Lease Costs | - | - |
| 126 | Deferred Debits - WS-Transmission Revenue | - | - |
| 127 | Customer Advance | - | - |
| 128 | Deferred Credits - ETA | - | - |
| 129 | Other Liabilities - ETA Coal Mine Severance | - | - |
| 130 | Other Liabilities - ETA State Agency Payments | - | - |
| 131 | SJGS County Ordinance Decommission | - | - |
| 132 | | | |
| 133 | **Total Accumulated Deferred Income Taxes** | (850,977,821) | (211,452) |
| 134 | | | |
| 135 | General Ledger ADIT Balance | | |
| 136 | | | |
| 137 | Difference (Rounding) | | |

| | A | CB | CC |
|---|---|---|---|
| 1 | **Public Service Company of New Mexico** | | |
| 2 | **Schedule H-12** | | |
| 3 | **Accumulated Tax Deferrals** | | |
| 4 | **Base Period Ending 6/30/2026** | | |
| 5 | **Test Period Ending 9/30/2028** | | |
| 6 | **This schedule is sponsored by PNM Witness Morris** | | |
| 7 | | | |
| 8 | | | |
| 9 | | **31-Jan-28** | |
| 10 | | **Balance** | **Activity** |
| 11 | **Accumulated Deferred Income Taxes** | | |
| 12 | Federal Tax Credit Carryforward | 21,743,653 | - |
| 13 | Federal Tax Credit Carryforward - Renewables | - | - |
| 14 | Net Operating Loss (NOL) | 53,415,338 | - |
| 15 | Incentive Pay Plans | - | - |
| 16 | Regulatory Assets - Coal Mine Decommissioning | - | - |
| 17 | Regulatory Liabilities - Renewable Rider | - | - |
| 18 | Income Tax Regulatory Liability | 87,204,636 | 635,720 |
| 19 | Income Tax Regulatory Asset | (65,518,006) | - |
| 20 | Investment Tax Credit 2024 | 7,393,757 | - |
| 21 | Investment Tax Credit - Sandia | - | - |
| 22 | Investment Tax Credit - Sunbelt | - | - |
| 23 | Investment Tax Credit - Distribution Battery Phase 2 | - | - |
| 24 | Lease Liability | - | - |
| 25 | Deferred Credits - Coal Mine Decommissioning | - | - |
| 26 | Regulatory Assets - ETA Carrying Charges | - | - |
| 27 | Regulatory Assets - ETA Job Training & Severance | - | - |
| 28 | Regulatory Assets - ETA Payments to State Agencies | - | - |
| 29 | Regulatory Assets - ETA SJGS Plant Decommissioning | - | - |
| 30 | Regulatory Assets - ETA SJGS upfront Financing Cost | - | - |
| 31 | Regulatory Assets - ETA Westmoreland Coal Mine Sev | - | - |
| 32 | Deferred Credits - Joint Use | 92,280 | (3,549) |
| 33 | Deferred Credits - Pathnet | 1,364,326 | (1,801) |
| 34 | Deferred Credits - PVNGS Dry Casks | - | - |
| 35 | Other Deferred Credits | - | - |
| 36 | Other Liabilities - ETA Job Training and Severance | - | - |
| 37 | Other Liabilities - Navajo Workforce Training | - | - |
| 38 | Other Liabilities | - | - |
| 39 | Blackstone Transaction Costs | - | - |
| 40 | Injury and Damages | 2,058,181 | - |
| 41 | Plant - AFUDC | (45,674,509) | (334,862) |
| 42 | Plant - Capitalized Interest | 17,607,447 | - |
| 43 | Decommissioning and Reclamation Trusts | - | - |
| 44 | ASC 740-10 (FIN 48) Reclassifications | - | - |
| 45 | Estimated Tax Rate Adjustment | - | - |
| 46 | PVNGS Licensing | 0 | - |
| 47 | Plant - 263A Adjustment | (80,078,392) | - |
| 48 | Deferred State Taxes | - | - |
| 49 | Plant - CIAC | 26,503,887 | - |
| 50 | Plant - Depreciation Nuclear Fuel | 8,974,613 | 774,601 |
| 51 | Plant - Removal Cost | (4,446,299) | - |
| 52 | Plant - Repairs | (207,106,773) | (754,312) |
| 53 | Plant - Section 174 Deduction | 7,509,732 | - |
| 54 | Plant - Asset Retirement Obligation | 10,469,742 | 46,922 |

| | A | CB | CC |
|---|---|---|---|
| 1 | **Public Service Company of New Mexico** | | |
| 2 | **Schedule H-12** | | |
| 3 | **Accumulated Tax Deferrals** | | |
| 4 | **Base Period Ending 6/30/2026** | | |
| 5 | **Test Period Ending 9/30/2028** | | |
| 6 | **This schedule is sponsored by PNM Witness Morris** | | |
| 7 | | | |
| 8 | | | |
| 9 | | **31-Jan-28** | |
| 10 | | **Balance** | **Activity** |
| 55 | Plant - Pollution Control Property | (2,154,701) | - |
| 56 | Plant - Liberalized Depreciation: Production | (147,320,908) | 1,299,541 |
| 57 | Plant - Liberalized Depreciation: Transmission | (144,486,876) | (2,295,706) |
| 58 | Plant - Liberalized Depreciation: Distribution | (176,842,115) | 314,090 |
| 59 | Plant - Liberalized Depreciation: General and Intangible | (11,339,301) | 137,962 |
| 60 | Plant - Liberalized Depreciation: Grid Mod | (17,011,860) | (1,000,565) |
| 61 | Plant - Liberalized Depreciation: Renewables | (46,461,759) | 192,003 |
| 62 | Plant - Four Corners Imprudence | - | - |
| 63 | Regulatory Assets - SJGS Stranded Costs Units 2&3 | (15,943,434) | 132,862 |
| 64 | Pension | (37,418,429) | 91,089 |
| 65 | Retiree Medical | - | - |
| 66 | Lease Asset | - | - |
| 67 | Loss on Reacquired Debt | (834,432) | 8,293 |
| 68 | Other Comprehensive Income (OCI) | - | - |
| 69 | Deferred Credits - SO2 Allowance | - | - |
| 70 | Deferred Debits - Rate Case Expense | (980,745) | 17,513 |
| 71 | Deferred Debits - Decoupling | - | - |
| 72 | Deferred Debits - Grid Modernization | - | - |
| 73 | Deferred Debits - RR Underground Rider | - | - |
| 74 | Energy Storage Agreement | (7,658,775) | 32,452 |
| 75 | Energy Transition Charges | - | - |
| 76 | Prepaid Expenses | (1,168,330) | - |
| 77 | Regulatory Assets - 2024 COVID Bad Debt | - | - |
| 78 | Regulatory Assets - COVID-19 Costs | (100,184) | 5,009 |
| 79 | Regulatory Assets - Community Solar | (850,267) | 13,122 |
| 80 | Regulatory assets - FAC | 0 | - |
| 81 | Regulatory Assets - EDAM Costs | (734,516) | 13,116 |
| 82 | Regulatory Assets - EIM Costs | (914,794) | 79,547 |
| 83 | Regulatory Assets - Energy Efficiency | (120,448) | 2,151 |
| 84 | Regulatory Assets - ETA | - | - |
| 85 | Regulatory Assets - FERC 893 Cyber | - | - |
| 86 | Regulatory Assets - IRP | (42,451) | 758 |
| 87 | Regulatory Assets - Sky Blue Under Recovery | - | - |
| 88 | Regulatory Assets - Renewable Energy | 2,484,587 | (24,267) |
| 89 | Regulatory Assets - Renewable Energy Credits | (78,530) | - |
| 90 | Regulatory Assets - SJGS External Legal Fees | (105,369) | 419 |
| 91 | Regulatory Assets - SJGS Final ETA Depcom | - | - |
| 92 | Regulatory Assets - SJGS Final ETA Mine Rec | - | - |
| 93 | Regulatory Assets - SJGS Replacement Resources | (1,771,322) | 7,043 |
| 94 | Regulatory Assets - SJGS Undepreciated Investment | - | - |
| 95 | Regulatory Assets - SJGS Underground Coal Mine | - | - |
| 96 | Regulatory Assets - Solar Direct Regulatory Assets | - | - |
| 97 | Regulatory Assets - TOD Rate Pilot Program | (732,478) | 13,080 |
| 98 | Regulatory Assets - Transportation Electrification | - | - |

| | A | CB | CC |
|---|---|---|---|
| 1 | **Public Service Company of New Mexico** | | |
| 2 | **Schedule H-12** | | |
| 3 | **Accumulated Tax Deferrals** | | |
| 4 | **Base Period Ending 6/30/2026** | | |
| 5 | **Test Period Ending 9/30/2028** | | |
| 6 | **This schedule is sponsored by PNM Witness Morris** | | |
| 7 | | | |
| 8 | | | |
| 9 | | **31-Jan-28** | |
| 10 | | **Balance** | **Activity** |
| 99 | Regulatory Assets - WCC Transaction Costs | - | - |
| 100 | Regulatory Liabilities - Energy Efficiency | - | - |
| 101 | Regulatory Liabilities - FAC | - | - |
| 102 | Regulatory Assets - PCB Refinancing Hedge | (1,374,378) | 17,874 |
| 103 | Prepaid Expenses: Production | (445,840) | - |
| 104 | Prepaid Expenses: Transmission | (1,849,743) | - |
| 105 | Prepaid Expenses: Transmission (incremental FERC Rates) | - | - |
| 106 | Prepaid Expenses: Distribution | (135,016) | - |
| 107 | Prepaid Expenses: Renewables | - | - |
| 108 | Regulatory Assets - 2024 Rate Change | (235,207) | 20,453 |
| 109 | Regulatory Assets - 2025 Rate Change | (247,663) | 8,540 |
| 110 | Regulatory Assets - SJGS Obsolete Inventory | (1,340,360) | 5,329 |
| 111 | Regulatory Liabilities - Earnings Test | - | - |
| 112 | Regulatory Assets - PVNGS Lease costs | (3,381) | 423 |
| 113 | Regulatory Assets - PVNGS Undepreciated Investment | (9,372,203) | 48,942 |
| 114 | Regulatory Assets - ETC Over/Under SPE | - | - |
| 115 | Regulatory Assets - PVNGS Replacement Resources | (420,112) | 2,194 |
| 116 | Regulatory Assets - Rate Rider 12 UG Rate | - | - |
| 117 | Regulatory Assets - Renewable Rider Curr Reg | - | - |
| 118 | Regulatory Assets - SJ Energy Transition Property (SPE) | (77,485,917) | 273,415 |
| 119 | Regulatory Liabilities - Curr Reg Liab-UG Rate Rider 12 | - | - |
| 120 | Regulatory Liabilities - ITC Sandia | 6,614,770 | (118,121) |
| 121 | Regulatory Liabilities - ITC Sunbelt | - | - |
| 122 | Regulatory Liabilities - ITC - Distribution Battery Phase 2 | 5,888,633 | (99,807) |
| 123 | Regulatory Liabilities - Energy Transition Cost True Up | 275,096 | (1,114) |
| 124 | Regulatory Liabilities - SJGS Retirements Rate Credit | 15,870 | (1,984) |
| 125 | Regulatory Liabilities - PVNGS Lease Costs | - | - |
| 126 | Deferred Debits - WS-Transmission Revenue | - | - |
| 127 | Customer Advance | - | - |
| 128 | Deferred Credits - ETA | - | - |
| 129 | Other Liabilities - ETA Coal Mine Severance | - | - |
| 130 | Other Liabilities - ETA State Agency Payments | - | - |
| 131 | SJGS County Ordinance Decommission | - | - |
| 132 | | | |
| 133 | **Total Accumulated Deferred Income Taxes** | (851,189,273) | (441,624) |
| 134 | | | |
| 135 | General Ledger ADIT Balance | | |
| 136 | | | |
| 137 | Difference (Rounding) | | |

| | A | CD | CE |
|---|---|---|---|
| 1 | **Public Service Company of New Mexico** | | |
| 2 | **Schedule H-12** | | |
| 3 | **Accumulated Tax Deferrals** | | |
| 4 | **Base Period Ending 6/30/2026** | | |
| 5 | **Test Period Ending 9/30/2028** | | |
| 6 | **This schedule is sponsored by PNM Witness Morris** | | |
| 7 | | | |
| 8 | | | |
| 9 | | **29-Feb-28** | |
| 10 | | **Balance** | **Activity** |
| 11 | **Accumulated Deferred Income Taxes** | | |
| 12 | Federal Tax Credit Carryforward | 21,743,653 | - |
| 13 | Federal Tax Credit Carryforward - Renewables | - | - |
| 14 | Net Operating Loss (NOL) | 53,415,338 | - |
| 15 | Incentive Pay Plans | - | - |
| 16 | Regulatory Assets - Coal Mine Decommissioning | - | - |
| 17 | Regulatory Liabilities - Renewable Rider | - | - |
| 18 | Income Tax Regulatory Liability | 87,840,356 | 635,720 |
| 19 | Income Tax Regulatory Asset | (65,518,006) | - |
| 20 | Investment Tax Credit 2024 | 7,393,757 | - |
| 21 | Investment Tax Credit - Sandia | - | - |
| 22 | Investment Tax Credit - Sunbelt | - | - |
| 23 | Investment Tax Credit - Distribution Battery Phase 2 | - | - |
| 24 | Lease Liability | - | - |
| 25 | Deferred Credits - Coal Mine Decommissioning | - | - |
| 26 | Regulatory Assets - ETA Carrying Charges | - | - |
| 27 | Regulatory Assets - ETA Job Training & Severance | - | - |
| 28 | Regulatory Assets - ETA Payments to State Agencies | - | - |
| 29 | Regulatory Assets - ETA SJGS Plant Decommissioning | - | - |
| 30 | Regulatory Assets - ETA SJGS upfront Financing Cost | - | - |
| 31 | Regulatory Assets - ETA Westmoreland Coal Mine Sev | - | - |
| 32 | Deferred Credits - Joint Use | 88,730 | (3,549) |
| 33 | Deferred Credits - Pathnet | 1,362,525 | (1,801) |
| 34 | Deferred Credits - PVNGS Dry Casks | - | - |
| 35 | Other Deferred Credits | - | - |
| 36 | Other Liabilities - ETA Job Training and Severance | - | - |
| 37 | Other Liabilities - Navajo Workforce Training | - | - |
| 38 | Other Liabilities | - | - |
| 39 | Blackstone Transaction Costs | - | - |
| 40 | Injury and Damages | 2,058,181 | - |
| 41 | Plant - AFUDC | (46,009,371) | (364,725) |
| 42 | Plant - Capitalized Interest | 17,607,447 | - |
| 43 | Decommissioning and Reclamation Trusts | - | - |
| 44 | ASC 740-10 (FIN 48) Reclassifications | - | - |
| 45 | Estimated Tax Rate Adjustment | - | - |
| 46 | PVNGS Licensing | 0 | - |
| 47 | Plant - 263A Adjustment | (80,078,392) | - |
| 48 | Deferred State Taxes | - | - |
| 49 | Plant - CIAC | 26,503,887 | - |
| 50 | Plant - Depreciation Nuclear Fuel | 9,749,214 | 594,782 |
| 51 | Plant - Removal Cost | (4,446,299) | - |
| 52 | Plant - Repairs | (207,861,085) | (1,072,168) |
| 53 | Plant - Section 174 Deduction | 7,509,732 | - |
| 54 | Plant - Asset Retirement Obligation | 10,516,664 | 47,171 |

| | A | CD | CE |
|---|---|---|---|
| 1 | **Public Service Company of New Mexico** | | |
| 2 | **Schedule H-12** | | |
| 3 | **Accumulated Tax Deferrals** | | |
| 4 | **Base Period Ending 6/30/2026** | | |
| 5 | **Test Period Ending 9/30/2028** | | |
| 6 | **This schedule is sponsored by PNM Witness Morris** | | |
| 7 | | | |
| 8 | | | |
| 9 | | **29-Feb-28** | |
| 10 | | **Balance** | **Activity** |
| 55 | Plant - Pollution Control Property | (2,154,701) | - |
| 56 | Plant - Liberalized Depreciation: Production | (146,021,368) | 88,283 |
| 57 | Plant - Liberalized Depreciation: Transmission | (146,782,582) | 1,008,626 |
| 58 | Plant - Liberalized Depreciation: Distribution | (176,528,025) | (2,294,478) |
| 59 | Plant - Liberalized Depreciation: General and Intangible | (11,201,338) | 881,454 |
| 60 | Plant - Liberalized Depreciation: Grid Mod | (18,012,425) | (1,211,279) |
| 61 | Plant - Liberalized Depreciation: Renewables | (46,269,756) | 192,150 |
| 62 | Plant - Four Corners Imprudence | - | - |
| 63 | Regulatory Assets - SJGS Stranded Costs Units 2&3 | (15,810,572) | 132,862 |
| 64 | Pension | (37,327,340) | 91,089 |
| 65 | Retiree Medical | - | - |
| 66 | Lease Asset | - | - |
| 67 | Loss on Reacquired Debt | (826,140) | 8,293 |
| 68 | Other Comprehensive Income (OCI) | - | - |
| 69 | Deferred Credits - SO2 Allowance | - | - |
| 70 | Deferred Debits - Rate Case Expense | (963,232) | 17,513 |
| 71 | Deferred Debits - Decoupling | - | - |
| 72 | Deferred Debits - Grid Modernization | - | - |
| 73 | Deferred Debits - RR Underground Rider | - | - |
| 74 | Energy Storage Agreement | (7,626,322) | 32,452 |
| 75 | Energy Transition Charges | - | - |
| 76 | Prepaid Expenses | (1,168,330) | - |
| 77 | Regulatory Assets - 2024 COVID Bad Debt | - | - |
| 78 | Regulatory Assets - COVID-19 Costs | (95,175) | 5,009 |
| 79 | Regulatory Assets - Community Solar | (837,145) | 13,122 |
| 80 | Regulatory assets - FAC | 0 | - |
| 81 | Regulatory Assets - EDAM Costs | (721,399) | 13,116 |
| 82 | Regulatory Assets - EIM Costs | (835,247) | 79,547 |
| 83 | Regulatory Assets - Energy Efficiency | (118,297) | 2,151 |
| 84 | Regulatory Assets - ETA | - | - |
| 85 | Regulatory Assets - FERC 893 Cyber | - | - |
| 86 | Regulatory Assets - IRP | (41,693) | 758 |
| 87 | Regulatory Assets - Sky Blue Under Recovery | - | - |
| 88 | Regulatory Assets - Renewable Energy | 2,460,320 | (24,267) |
| 89 | Regulatory Assets - Renewable Energy Credits | (78,530) | - |
| 90 | Regulatory Assets - SJGS External Legal Fees | (104,950) | 419 |
| 91 | Regulatory Assets - SJGS Final ETA Depcom | - | - |
| 92 | Regulatory Assets - SJGS Final ETA Mine Rec | - | - |
| 93 | Regulatory Assets - SJGS Replacement Resources | (1,764,279) | 7,043 |
| 94 | Regulatory Assets - SJGS Undepreciated Investment | - | - |
| 95 | Regulatory Assets - SJGS Underground Coal Mine | - | - |
| 96 | Regulatory Assets - Solar Direct Regulatory Assets | - | - |
| 97 | Regulatory Assets - TOD Rate Pilot Program | (719,398) | 13,080 |
| 98 | Regulatory Assets - Transportation Electrification | - | - |

| | A | CD | CE |
|---|---|---|---|
| 1 | **Public Service Company of New Mexico** | | |
| 2 | **Schedule H-12** | | |
| 3 | **Accumulated Tax Deferrals** | | |
| 4 | **Base Period Ending 6/30/2026** | | |
| 5 | **Test Period Ending 9/30/2028** | | |
| 6 | **This schedule is sponsored by PNM Witness Morris** | | |
| 7 | | | |
| 8 | | | |
| 9 | | **29-Feb-28** | |
| 10 | | **Balance** | **Activity** |
| 99 | Regulatory Assets - WCC Transaction Costs | - | - |
| 100 | Regulatory Liabilities - Energy Efficiency | - | - |
| 101 | Regulatory Liabilities - FAC | - | - |
| 102 | Regulatory Assets - PCB Refinancing Hedge | (1,356,504) | 17,874 |
| 103 | Prepaid Expenses: Production | (445,840) | - |
| 104 | Prepaid Expenses: Transmission | (1,849,743) | - |
| 105 | Prepaid Expenses: Transmission (incremental FERC Rates) | - | - |
| 106 | Prepaid Expenses: Distribution | (135,016) | - |
| 107 | Prepaid Expenses: Renewables | - | - |
| 108 | Regulatory Assets - 2024 Rate Change | (214,754) | 20,453 |
| 109 | Regulatory Assets - 2025 Rate Change | (239,123) | 8,540 |
| 110 | Regulatory Assets - SJGS Obsolete Inventory | (1,335,031) | 5,329 |
| 111 | Regulatory Liabilities - Earnings Test | - | - |
| 112 | Regulatory Assets - PVNGS Lease costs | (2,959) | 423 |
| 113 | Regulatory Assets - PVNGS Undepreciated Investment | (9,323,261) | 48,942 |
| 114 | Regulatory Assets - ETC Over/Under SPE | - | - |
| 115 | Regulatory Assets - PVNGS Replacement Resources | (417,919) | 2,194 |
| 116 | Regulatory Assets - Rate Rider 12 UG Rate | - | - |
| 117 | Regulatory Assets - Renewable Rider Curr Reg | - | - |
| 118 | Regulatory Assets - SJ Energy Transition Property (SPE) | (77,212,502) | 273,415 |
| 119 | Regulatory Liabilities - Curr Reg Liab-UG Rate Rider 12 | - | - |
| 120 | Regulatory Liabilities - ITC Sandia | 6,496,649 | (118,121) |
| 121 | Regulatory Liabilities - ITC Sunbelt | - | - |
| 122 | Regulatory Liabilities - ITC - Distribution Battery Phase 2 | 5,788,826 | (99,807) |
| 123 | Regulatory Liabilities - Energy Transition Cost True Up | 273,982 | (1,114) |
| 124 | Regulatory Liabilities - SJGS Retirements Rate Credit | 13,886 | (1,984) |
| 125 | Regulatory Liabilities - PVNGS Lease Costs | - | - |
| 126 | Deferred Debits - WS-Transmission Revenue | - | - |
| 127 | Customer Advance | - | - |
| 128 | Deferred Credits - ETA | - | - |
| 129 | Other Liabilities - ETA Coal Mine Severance | - | - |
| 130 | Other Liabilities - ETA State Agency Payments | - | - |
| 131 | SJGS County Ordinance Decommission | - | - |
| 132 | | | |
| 133 | **Total Accumulated Deferred Income Taxes** | (851,630,897) | (951,482) |
| 134 | | | |
| 135 | General Ledger ADIT Balance | | |
| 136 | | | |
| 137 | Difference (Rounding) | | |

| | A | CF | CG |
|---|---|---|---|
| 1 | **Public Service Company of New Mexico** | | |
| 2 | **Schedule H-12** | | |
| 3 | **Accumulated Tax Deferrals** | | |
| 4 | **Base Period Ending 6/30/2026** | | |
| 5 | **Test Period Ending 9/30/2028** | | |
| 6 | **This schedule is sponsored by PNM Witness Morris** | | |
| 7 | | | |
| 8 | | | |
| 9 | | **31-Mar-28** | |
| 10 | | **Balance** | **Activity** |
| 11 | **Accumulated Deferred Income Taxes** | | |
| 12 | Federal Tax Credit Carryforward | 21,743,653 | - |
| 13 | Federal Tax Credit Carryforward - Renewables | - | - |
| 14 | Net Operating Loss (NOL) | 53,415,338 | - |
| 15 | Incentive Pay Plans | - | - |
| 16 | Regulatory Assets - Coal Mine Decommissioning | - | - |
| 17 | Regulatory Liabilities - Renewable Rider | - | - |
| 18 | Income Tax Regulatory Liability | 88,476,076 | 635,720 |
| 19 | Income Tax Regulatory Asset | (65,518,006) | - |
| 20 | Investment Tax Credit 2024 | 7,393,757 | - |
| 21 | Investment Tax Credit - Sandia | - | - |
| 22 | Investment Tax Credit - Sunbelt | - | - |
| 23 | Investment Tax Credit - Distribution Battery Phase 2 | - | - |
| 24 | Lease Liability | - | - |
| 25 | Deferred Credits - Coal Mine Decommissioning | - | - |
| 26 | Regulatory Assets - ETA Carrying Charges | - | - |
| 27 | Regulatory Assets - ETA Job Training & Severance | - | - |
| 28 | Regulatory Assets - ETA Payments to State Agencies | - | - |
| 29 | Regulatory Assets - ETA SJGS Plant Decommissioning | - | - |
| 30 | Regulatory Assets - ETA SJGS upfront Financing Cost | - | - |
| 31 | Regulatory Assets - ETA Westmoreland Coal Mine Sev | - | - |
| 32 | Deferred Credits - Joint Use | 85,181 | (3,549) |
| 33 | Deferred Credits - Pathnet | 1,360,724 | (1,801) |
| 34 | Deferred Credits - PVNGS Dry Casks | - | - |
| 35 | Other Deferred Credits | - | - |
| 36 | Other Liabilities - ETA Job Training and Severance | - | - |
| 37 | Other Liabilities - Navajo Workforce Training | - | - |
| 38 | Other Liabilities | - | - |
| 39 | Blackstone Transaction Costs | - | - |
| 40 | Injury and Damages | 2,058,181 | - |
| 41 | Plant - AFUDC | (46,374,096) | (397,324) |
| 42 | Plant - Capitalized Interest | 17,607,447 | - |
| 43 | Decommissioning and Reclamation Trusts | - | - |
| 44 | ASC 740-10 (FIN 48) Reclassifications | - | - |
| 45 | Estimated Tax Rate Adjustment | - | - |
| 46 | PVNGS Licensing | 0 | - |
| 47 | Plant - 263A Adjustment | (80,078,392) | - |
| 48 | Deferred State Taxes | - | - |
| 49 | Plant - CIAC | 26,503,887 | - |
| 50 | Plant - Depreciation Nuclear Fuel | 10,343,996 | (647,866) |
| 51 | Plant - Removal Cost | (4,446,299) | - |
| 52 | Plant - Repairs | (208,933,252) | (2,430,048) |
| 53 | Plant - Section 174 Deduction | 7,509,732 | - |
| 54 | Plant - Asset Retirement Obligation | 10,563,835 | 47,421 |

| | A | CF | CG |
|---|---|---|---|
| 1 | **Public Service Company of New Mexico** | | |
| 2 | **Schedule H-12** | | |
| 3 | **Accumulated Tax Deferrals** | | |
| 4 | **Base Period Ending 6/30/2026** | | |
| 5 | **Test Period Ending 9/30/2028** | | |
| 6 | **This schedule is sponsored by PNM Witness Morris** | | |
| 7 | | | |
| 8 | | | |
| 9 | | **31-Mar-28** | |
| 10 | | **Balance** | **Activity** |
| 55 | Plant - Pollution Control Property | (2,154,701) | - |
| 56 | Plant - Liberalized Depreciation: Production | (145,933,085) | (231,846) |
| 57 | Plant - Liberalized Depreciation: Transmission | (145,773,956) | 58,974 |
| 58 | Plant - Liberalized Depreciation: Distribution | (178,822,503) | (1,907,881) |
| 59 | Plant - Liberalized Depreciation: General and Intangible | (10,319,885) | 929,363 |
| 60 | Plant - Liberalized Depreciation: Grid Mod | (19,223,705) | (358,487) |
| 61 | Plant - Liberalized Depreciation: Renewables | (46,077,606) | 185,219 |
| 62 | Plant - Four Corners Imprudence | - | - |
| 63 | Regulatory Assets - SJGS Stranded Costs Units 2&3 | (15,677,710) | 132,862 |
| 64 | Pension | (37,236,250) | 91,089 |
| 65 | Retiree Medical | - | - |
| 66 | Lease Asset | - | - |
| 67 | Loss on Reacquired Debt | (817,847) | 8,293 |
| 68 | Other Comprehensive Income (OCI) | - | - |
| 69 | Deferred Credits - SO2 Allowance | - | - |
| 70 | Deferred Debits - Rate Case Expense | (945,718) | 17,513 |
| 71 | Deferred Debits - Decoupling | - | - |
| 72 | Deferred Debits - Grid Modernization | - | - |
| 73 | Deferred Debits - RR Underground Rider | - | - |
| 74 | Energy Storage Agreement | (7,593,870) | 32,452 |
| 75 | Energy Transition Charges | - | - |
| 76 | Prepaid Expenses | (1,168,330) | - |
| 77 | Regulatory Assets - 2024 COVID Bad Debt | - | - |
| 78 | Regulatory Assets - COVID-19 Costs | (90,166) | 5,009 |
| 79 | Regulatory Assets - Community Solar | (824,022) | 13,122 |
| 80 | Regulatory assets - FAC | 0 | - |
| 81 | Regulatory Assets - EDAM Costs | (708,283) | 13,116 |
| 82 | Regulatory Assets - EIM Costs | (755,699) | 79,547 |
| 83 | Regulatory Assets - Energy Efficiency | (116,146) | 2,151 |
| 84 | Regulatory Assets - ETA | - | - |
| 85 | Regulatory Assets - FERC 893 Cyber | - | - |
| 86 | Regulatory Assets - IRP | (40,935) | 758 |
| 87 | Regulatory Assets - Sky Blue Under Recovery | - | - |
| 88 | Regulatory Assets - Renewable Energy | 2,436,053 | (24,267) |
| 89 | Regulatory Assets - Renewable Energy Credits | (78,530) | - |
| 90 | Regulatory Assets - SJGS External Legal Fees | (104,531) | 419 |
| 91 | Regulatory Assets - SJGS Final ETA Depcom | - | - |
| 92 | Regulatory Assets - SJGS Final ETA Mine Rec | - | - |
| 93 | Regulatory Assets - SJGS Replacement Resources | (1,757,236) | 7,043 |
| 94 | Regulatory Assets - SJGS Undepreciated Investment | - | - |
| 95 | Regulatory Assets - SJGS Underground Coal Mine | - | - |
| 96 | Regulatory Assets - Solar Direct Regulatory Assets | - | - |
| 97 | Regulatory Assets - TOD Rate Pilot Program | (706,318) | 13,080 |
| 98 | Regulatory Assets - Transportation Electrification | - | - |

| | A | CF | CG |
|---|---|---|---|
| 1 | **Public Service Company of New Mexico** | | |
| 2 | **Schedule H-12** | | |
| 3 | **Accumulated Tax Deferrals** | | |
| 4 | **Base Period Ending 6/30/2026** | | |
| 5 | **Test Period Ending 9/30/2028** | | |
| 6 | **This schedule is sponsored by PNM Witness Morris** | | |
| 7 | | | |
| 8 | | | |
| 9 | | **31-Mar-28** | |
| 10 | | **Balance** | **Activity** |
| 99 | Regulatory Assets - WCC Transaction Costs | - | - |
| 100 | Regulatory Liabilities - Energy Efficiency | - | - |
| 101 | Regulatory Liabilities - FAC | - | - |
| 102 | Regulatory Assets - PCB Refinancing Hedge | (1,338,630) | 17,874 |
| 103 | Prepaid Expenses: Production | (445,840) | - |
| 104 | Prepaid Expenses: Transmission | (1,849,743) | - |
| 105 | Prepaid Expenses: Transmission (incremental FERC Rates) | - | - |
| 106 | Prepaid Expenses: Distribution | (135,016) | - |
| 107 | Prepaid Expenses: Renewables | - | - |
| 108 | Regulatory Assets - 2024 Rate Change | (194,302) | 20,453 |
| 109 | Regulatory Assets - 2025 Rate Change | (230,583) | 8,540 |
| 110 | Regulatory Assets - SJGS Obsolete Inventory | (1,329,701) | 5,329 |
| 111 | Regulatory Liabilities - Earnings Test | - | - |
| 112 | Regulatory Assets - PVNGS Lease costs | (2,536) | 423 |
| 113 | Regulatory Assets - PVNGS Undepreciated Investment | (9,274,319) | 48,942 |
| 114 | Regulatory Assets - ETC Over/Under SPE | - | - |
| 115 | Regulatory Assets - PVNGS Replacement Resources | (415,725) | 2,194 |
| 116 | Regulatory Assets - Rate Rider 12 UG Rate | - | - |
| 117 | Regulatory Assets - Renewable Rider Curr Reg | - | - |
| 118 | Regulatory Assets - SJ Energy Transition Property (SPE) | (76,939,086) | 273,415 |
| 119 | Regulatory Liabilities - Curr Reg Liab-UG Rate Rider 12 | - | - |
| 120 | Regulatory Liabilities - ITC Sandia | 6,378,528 | (118,121) |
| 121 | Regulatory Liabilities - ITC Sunbelt | - | - |
| 122 | Regulatory Liabilities - ITC - Distribution Battery Phase 2 | 5,689,018 | (99,807) |
| 123 | Regulatory Liabilities - Energy Transition Cost True Up | 272,869 | (1,114) |
| 124 | Regulatory Liabilities - SJGS Retirements Rate Credit | 11,902 | (1,984) |
| 125 | Regulatory Liabilities - PVNGS Lease Costs | - | - |
| 126 | Deferred Debits - WS-Transmission Revenue | - | - |
| 127 | Customer Advance | - | - |
| 128 | Deferred Credits - ETA | - | - |
| 129 | Other Liabilities - ETA Coal Mine Severance | - | - |
| 130 | Other Liabilities - ETA State Agency Payments | - | - |
| 131 | SJGS County Ordinance Decommission | - | - |
| 132 | | | |
| 133 | **Total Accumulated Deferred Income Taxes** | (852,582,378) | (3,573,772) |
| 134 | | | |
| 135 | General Ledger ADIT Balance | | |
| 136 | | | |
| 137 | Difference (Rounding) | | |

| | A | CH | CI |
|---|---|---|---|
| 1 | **Public Service Company of New Mexico** | | |
| 2 | **Schedule H-12** | | |
| 3 | **Accumulated Tax Deferrals** | | |
| 4 | **Base Period Ending 6/30/2026** | | |
| 5 | **Test Period Ending 9/30/2028** | | |
| 6 | **This schedule is sponsored by PNM Witness Morris** | | |
| 7 | | | |
| 8 | | | |
| 9 | | **30-Apr-28** | |
| 10 | | **Balance** | **Activity** |
| 11 | **Accumulated Deferred Income Taxes** | | |
| 12 | Federal Tax Credit Carryforward | 21,743,653 | - |
| 13 | Federal Tax Credit Carryforward - Renewables | - | - |
| 14 | Net Operating Loss (NOL) | 53,415,338 | - |
| 15 | Incentive Pay Plans | - | - |
| 16 | Regulatory Assets - Coal Mine Decommissioning | - | - |
| 17 | Regulatory Liabilities - Renewable Rider | - | - |
| 18 | Income Tax Regulatory Liability | 89,111,796 | 635,720 |
| 19 | Income Tax Regulatory Asset | (65,518,006) | - |
| 20 | Investment Tax Credit 2024 | 7,393,757 | - |
| 21 | Investment Tax Credit - Sandia | - | - |
| 22 | Investment Tax Credit - Sunbelt | - | 90,769,705 |
| 23 | Investment Tax Credit - Distribution Battery Phase 2 | - | - |
| 24 | Lease Liability | - | - |
| 25 | Deferred Credits - Coal Mine Decommissioning | - | - |
| 26 | Regulatory Assets - ETA Carrying Charges | - | - |
| 27 | Regulatory Assets - ETA Job Training & Severance | - | - |
| 28 | Regulatory Assets - ETA Payments to State Agencies | - | - |
| 29 | Regulatory Assets - ETA SJGS Plant Decommissioning | - | - |
| 30 | Regulatory Assets - ETA SJGS upfront Financing Cost | - | - |
| 31 | Regulatory Assets - ETA Westmoreland Coal Mine Sev | - | - |
| 32 | Deferred Credits - Joint Use | 81,632 | (3,549) |
| 33 | Deferred Credits - Pathnet | 1,358,923 | (1,801) |
| 34 | Deferred Credits - PVNGS Dry Casks | - | - |
| 35 | Other Deferred Credits | - | - |
| 36 | Other Liabilities - ETA Job Training and Severance | - | - |
| 37 | Other Liabilities - Navajo Workforce Training | - | - |
| 38 | Other Liabilities | - | - |
| 39 | Blackstone Transaction Costs | - | - |
| 40 | Injury and Damages | 2,058,181 | - |
| 41 | Plant - AFUDC | (46,771,420) | (412,795) |
| 42 | Plant - Capitalized Interest | 17,607,447 | - |
| 43 | Decommissioning and Reclamation Trusts | - | - |
| 44 | ASC 740-10 (FIN 48) Reclassifications | - | - |
| 45 | Estimated Tax Rate Adjustment | - | - |
| 46 | PVNGS Licensing | 0 | - |
| 47 | Plant - 263A Adjustment | (80,078,392) | - |
| 48 | Deferred State Taxes | - | - |
| 49 | Plant - CIAC | 26,503,887 | - |
| 50 | Plant - Depreciation Nuclear Fuel | 9,696,130 | 550,137 |
| 51 | Plant - Removal Cost | (4,446,299) | - |
| 52 | Plant - Repairs | (211,363,300) | (1,169,364) |
| 53 | Plant - Section 174 Deduction | 7,509,732 | - |
| 54 | Plant - Asset Retirement Obligation | 10,611,256 | 47,672 |

| | A | CH | CI |
|---|---|---|---|
| 1 | **Public Service Company of New Mexico** | | |
| 2 | **Schedule H-12** | | |
| 3 | **Accumulated Tax Deferrals** | | |
| 4 | **Base Period Ending 6/30/2026** | | |
| 5 | **Test Period Ending 9/30/2028** | | |
| 6 | **This schedule is sponsored by PNM Witness Morris** | | |
| 7 | | | |
| 8 | | | |
| 9 | | **30-Apr-28** | |
| 10 | | **Balance** | **Activity** |
| 55 | Plant - Pollution Control Property | (2,154,701) | - |
| 56 | Plant - Liberalized Depreciation: Production | (146,164,931) | 681,753 |
| 57 | Plant - Liberalized Depreciation: Transmission | (145,714,981) | (3,423,563) |
| 58 | Plant - Liberalized Depreciation: Distribution | (180,730,384) | 563,664 |
| 59 | Plant - Liberalized Depreciation: General and Intangible | (9,390,521) | 950,521 |
| 60 | Plant - Liberalized Depreciation: Grid Mod | (19,582,192) | (206,809) |
| 61 | Plant - Liberalized Depreciation: Renewables | (45,892,388) | 141,447 |
| 62 | Plant - Four Corners Imprudence | - | - |
| 63 | Regulatory Assets - SJGS Stranded Costs Units 2&3 | (15,544,848) | 132,862 |
| 64 | Pension | (37,145,161) | 91,089 |
| 65 | Retiree Medical | - | - |
| 66 | Lease Asset | - | - |
| 67 | Loss on Reacquired Debt | (809,554) | 8,293 |
| 68 | Other Comprehensive Income (OCI) | - | - |
| 69 | Deferred Credits - SO2 Allowance | - | - |
| 70 | Deferred Debits - Rate Case Expense | (928,205) | 17,513 |
| 71 | Deferred Debits - Decoupling | - | - |
| 72 | Deferred Debits - Grid Modernization | - | - |
| 73 | Deferred Debits - RR Underground Rider | - | - |
| 74 | Energy Storage Agreement | (7,561,417) | 32,452 |
| 75 | Energy Transition Charges | - | - |
| 76 | Prepaid Expenses | (1,168,330) | - |
| 77 | Regulatory Assets - 2024 COVID Bad Debt | - | - |
| 78 | Regulatory Assets - COVID-19 Costs | (85,156) | 5,009 |
| 79 | Regulatory Assets - Community Solar | (810,900) | 13,122 |
| 80 | Regulatory assets - FAC | 0 | - |
| 81 | Regulatory Assets - EDAM Costs | (695,166) | 13,116 |
| 82 | Regulatory Assets - EIM Costs | (676,152) | 79,547 |
| 83 | Regulatory Assets - Energy Efficiency | (113,995) | 2,151 |
| 84 | Regulatory Assets - ETA | - | - |
| 85 | Regulatory Assets - FERC 893 Cyber | - | - |
| 86 | Regulatory Assets - IRP | (40,177) | 758 |
| 87 | Regulatory Assets - Sky Blue Under Recovery | - | - |
| 88 | Regulatory Assets - Renewable Energy | 2,411,786 | (24,267) |
| 89 | Regulatory Assets - Renewable Energy Credits | (78,530) | - |
| 90 | Regulatory Assets - SJGS External Legal Fees | (104,112) | 419 |
| 91 | Regulatory Assets - SJGS Final ETA Depcom | - | - |
| 92 | Regulatory Assets - SJGS Final ETA Mine Rec | - | - |
| 93 | Regulatory Assets - SJGS Replacement Resources | (1,750,193) | 7,043 |
| 94 | Regulatory Assets - SJGS Undepreciated Investment | - | - |
| 95 | Regulatory Assets - SJGS Underground Coal Mine | - | - |
| 96 | Regulatory Assets - Solar Direct Regulatory Assets | - | - |
| 97 | Regulatory Assets - TOD Rate Pilot Program | (693,238) | 13,080 |
| 98 | Regulatory Assets - Transportation Electrification | - | - |

| | A | CH | CI |
|---|---|---|---|
| 1 | **Public Service Company of New Mexico** | | |
| 2 | **Schedule H-12** | | |
| 3 | **Accumulated Tax Deferrals** | | |
| 4 | **Base Period Ending 6/30/2026** | | |
| 5 | **Test Period Ending 9/30/2028** | | |
| 6 | **This schedule is sponsored by PNM Witness Morris** | | |
| 7 | | | |
| 8 | | | |
| 9 | | **30-Apr-28** | |
| 10 | | **Balance** | **Activity** |
| 99 | Regulatory Assets - WCC Transaction Costs | - | - |
| 100 | Regulatory Liabilities - Energy Efficiency | - | - |
| 101 | Regulatory Liabilities - FAC | - | - |
| 102 | Regulatory Assets - PCB Refinancing Hedge | (1,320,756) | 17,874 |
| 103 | Prepaid Expenses: Production | (445,840) | - |
| 104 | Prepaid Expenses: Transmission | (1,849,743) | - |
| 105 | Prepaid Expenses: Transmission (incremental FERC Rates) | - | - |
| 106 | Prepaid Expenses: Distribution | (135,016) | - |
| 107 | Prepaid Expenses: Renewables | - | - |
| 108 | Regulatory Assets - 2024 Rate Change | (173,849) | 20,453 |
| 109 | Regulatory Assets - 2025 Rate Change | (222,043) | 8,540 |
| 110 | Regulatory Assets - SJGS Obsolete Inventory | (1,324,372) | 5,329 |
| 111 | Regulatory Liabilities - Earnings Test | - | - |
| 112 | Regulatory Assets - PVNGS Lease costs | (2,113) | 423 |
| 113 | Regulatory Assets - PVNGS Undepreciated Investment | (9,225,377) | 48,942 |
| 114 | Regulatory Assets - ETC Over/Under SPE | - | - |
| 115 | Regulatory Assets - PVNGS Replacement Resources | (413,531) | 2,194 |
| 116 | Regulatory Assets - Rate Rider 12 UG Rate | - | - |
| 117 | Regulatory Assets - Renewable Rider Curr Reg | - | - |
| 118 | Regulatory Assets - SJ Energy Transition Property (SPE) | (76,665,671) | 273,415 |
| 119 | Regulatory Liabilities - Curr Reg Liab-UG Rate Rider 12 | - | - |
| 120 | Regulatory Liabilities - ITC Sandia | 6,260,407 | (118,121) |
| 121 | Regulatory Liabilities - ITC Sunbelt | - | - |
| 122 | Regulatory Liabilities - ITC - Distribution Battery Phase 2 | 5,589,211 | (99,807) |
| 123 | Regulatory Liabilities - Energy Transition Cost True Up | 271,755 | (1,114) |
| 124 | Regulatory Liabilities - SJGS Retirements Rate Credit | 9,919 | (1,984) |
| 125 | Regulatory Liabilities - PVNGS Lease Costs | - | - |
| 126 | Deferred Debits - WS-Transmission Revenue | - | - |
| 127 | Customer Advance | - | - |
| 128 | Deferred Credits - ETA | - | - |
| 129 | Other Liabilities - ETA Coal Mine Severance | - | - |
| 130 | Other Liabilities - ETA State Agency Payments | - | - |
| 131 | SJGS County Ordinance Decommission | - | - |
| 132 | | | |
| 133 | **Total Accumulated Deferred Income Taxes** | (856,156,151) | 89,671,071 |
| 134 | | | |
| 135 | General Ledger ADIT Balance | | |
| 136 | | | |
| 137 | Difference (Rounding) | | |

| | A | CJ | CK |
|---|---|---|---|
| 1 | **Public Service Company of New Mexico** | | |
| 2 | **Schedule H-12** | | |
| 3 | **Accumulated Tax Deferrals** | | |
| 4 | **Base Period Ending 6/30/2026** | | |
| 5 | **Test Period Ending 9/30/2028** | | |
| 6 | **This schedule is sponsored by PNM Witness Morris** | | |
| 7 | | | |
| 8 | | | |
| 9 | | **31-May-28** | |
| 10 | | **Balance** | **Activity** |
| 11 | **Accumulated Deferred Income Taxes** | | |
| 12 | Federal Tax Credit Carryforward | 21,743,653 | - |
| 13 | Federal Tax Credit Carryforward - Renewables | - | - |
| 14 | Net Operating Loss (NOL) | 53,415,338 | - |
| 15 | Incentive Pay Plans | - | - |
| 16 | Regulatory Assets - Coal Mine Decommissioning | - | - |
| 17 | Regulatory Liabilities - Renewable Rider | - | - |
| 18 | Income Tax Regulatory Liability | 89,747,515 | 635,720 |
| 19 | Income Tax Regulatory Asset | (65,518,006) | - |
| 20 | Investment Tax Credit 2024 | 7,393,757 | - |
| 21 | Investment Tax Credit - Sandia | - | - |
| 22 | Investment Tax Credit - Sunbelt | 90,769,705 | (90,769,705) |
| 23 | Investment Tax Credit - Distribution Battery Phase 2 | - | - |
| 24 | Lease Liability | - | - |
| 25 | Deferred Credits - Coal Mine Decommissioning | - | - |
| 26 | Regulatory Assets - ETA Carrying Charges | - | - |
| 27 | Regulatory Assets - ETA Job Training & Severance | - | - |
| 28 | Regulatory Assets - ETA Payments to State Agencies | - | - |
| 29 | Regulatory Assets - ETA SJGS Plant Decommissioning | - | - |
| 30 | Regulatory Assets - ETA SJGS upfront Financing Cost | - | - |
| 31 | Regulatory Assets - ETA Westmoreland Coal Mine Sev | - | - |
| 32 | Deferred Credits - Joint Use | 78,083 | (3,549) |
| 33 | Deferred Credits - Pathnet | 1,357,121 | (1,801) |
| 34 | Deferred Credits - PVNGS Dry Casks | - | - |
| 35 | Other Deferred Credits | - | - |
| 36 | Other Liabilities - ETA Job Training and Severance | - | - |
| 37 | Other Liabilities - Navajo Workforce Training | - | - |
| 38 | Other Liabilities | - | - |
| 39 | Blackstone Transaction Costs | - | - |
| 40 | Injury and Damages | 2,058,181 | - |
| 41 | Plant - AFUDC | (47,184,215) | (416,627) |
| 42 | Plant - Capitalized Interest | 17,607,447 | - |
| 43 | Decommissioning and Reclamation Trusts | - | - |
| 44 | ASC 740-10 (FIN 48) Reclassifications | - | - |
| 45 | Estimated Tax Rate Adjustment | - | - |
| 46 | PVNGS Licensing | 0 | - |
| 47 | Plant - 263A Adjustment | (80,078,392) | - |
| 48 | Deferred State Taxes | - | - |
| 49 | Plant - CIAC | 26,503,887 | - |
| 50 | Plant - Depreciation Nuclear Fuel | 10,246,267 | (58,451) |
| 51 | Plant - Removal Cost | (4,446,299) | - |
| 52 | Plant - Repairs | (212,532,664) | (5,485,416) |
| 53 | Plant - Section 174 Deduction | 7,509,732 | - |
| 54 | Plant - Asset Retirement Obligation | 10,658,928 | 47,925 |

| | A | CJ | CK |
|---|---|---|---|
| 1 | **Public Service Company of New Mexico** | | |
| 2 | **Schedule H-12** | | |
| 3 | **Accumulated Tax Deferrals** | | |
| 4 | **Base Period Ending 6/30/2026** | | |
| 5 | **Test Period Ending 9/30/2028** | | |
| 6 | **This schedule is sponsored by PNM Witness Morris** | | |
| 7 | | | |
| 8 | | | |
| 9 | | **31-May-28** | |
| 10 | | **Balance** | **Activity** |
| 55 | Plant - Pollution Control Property | (2,154,701) | - |
| 56 | Plant - Liberalized Depreciation: Production | (145,483,178) | 1,191,410 |
| 57 | Plant - Liberalized Depreciation: Transmission | (149,138,545) | (5,146,321) |
| 58 | Plant - Liberalized Depreciation: Distribution | (180,166,720) | 1,394,707 |
| 59 | Plant - Liberalized Depreciation: General and Intangible | (8,440,000) | 967,105 |
| 60 | Plant - Liberalized Depreciation: Grid Mod | (19,789,001) | 151,530 |
| 61 | Plant - Liberalized Depreciation: Renewables | (45,750,941) | 188,789 |
| 62 | Plant - Four Corners Imprudence | - | - |
| 63 | Regulatory Assets - SJGS Stranded Costs Units 2&3 | (15,411,986) | 132,862 |
| 64 | Pension | (37,054,071) | 91,089 |
| 65 | Retiree Medical | - | - |
| 66 | Lease Asset | - | - |
| 67 | Loss on Reacquired Debt | (801,261) | 8,293 |
| 68 | Other Comprehensive Income (OCI) | - | - |
| 69 | Deferred Credits - SO2 Allowance | - | - |
| 70 | Deferred Debits - Rate Case Expense | (910,692) | 17,513 |
| 71 | Deferred Debits - Decoupling | - | - |
| 72 | Deferred Debits - Grid Modernization | - | - |
| 73 | Deferred Debits - RR Underground Rider | - | - |
| 74 | Energy Storage Agreement | (7,528,965) | 32,452 |
| 75 | Energy Transition Charges | - | - |
| 76 | Prepaid Expenses | (1,168,330) | - |
| 77 | Regulatory Assets - 2024 COVID Bad Debt | - | - |
| 78 | Regulatory Assets - COVID-19 Costs | (80,147) | 5,009 |
| 79 | Regulatory Assets - Community Solar | (797,778) | 13,122 |
| 80 | Regulatory assets - FAC | 0 | - |
| 81 | Regulatory Assets - EDAM Costs | (682,050) | 13,116 |
| 82 | Regulatory Assets - EIM Costs | (596,605) | 79,547 |
| 83 | Regulatory Assets - Energy Efficiency | (111,844) | 2,151 |
| 84 | Regulatory Assets - ETA | - | - |
| 85 | Regulatory Assets - FERC 893 Cyber | - | - |
| 86 | Regulatory Assets - IRP | (39,419) | 758 |
| 87 | Regulatory Assets - Sky Blue Under Recovery | - | - |
| 88 | Regulatory Assets - Renewable Energy | 2,387,520 | (24,267) |
| 89 | Regulatory Assets - Renewable Energy Credits | (78,530) | - |
| 90 | Regulatory Assets - SJGS External Legal Fees | (103,693) | 419 |
| 91 | Regulatory Assets - SJGS Final ETA Depcom | - | - |
| 92 | Regulatory Assets - SJGS Final ETA Mine Rec | - | - |
| 93 | Regulatory Assets - SJGS Replacement Resources | (1,743,150) | 7,043 |
| 94 | Regulatory Assets - SJGS Undepreciated Investment | - | - |
| 95 | Regulatory Assets - SJGS Underground Coal Mine | - | - |
| 96 | Regulatory Assets - Solar Direct Regulatory Assets | - | - |
| 97 | Regulatory Assets - TOD Rate Pilot Program | (680,158) | 13,080 |
| 98 | Regulatory Assets - Transportation Electrification | - | - |

| | A | CJ | CK |
|---|---|---|---|
| 1 | **Public Service Company of New Mexico** | | |
| 2 | **Schedule H-12** | | |
| 3 | **Accumulated Tax Deferrals** | | |
| 4 | **Base Period Ending 6/30/2026** | | |
| 5 | **Test Period Ending 9/30/2028** | | |
| 6 | **This schedule is sponsored by PNM Witness Morris** | | |
| 7 | | | |
| 8 | | | |
| 9 | | **31-May-28** | |
| 10 | | **Balance** | **Activity** |
| 99 | Regulatory Assets - WCC Transaction Costs | - | - |
| 100 | Regulatory Liabilities - Energy Efficiency | - | - |
| 101 | Regulatory Liabilities - FAC | - | - |
| 102 | Regulatory Assets - PCB Refinancing Hedge | (1,302,881) | 17,874 |
| 103 | Prepaid Expenses: Production | (445,840) | - |
| 104 | Prepaid Expenses: Transmission | (1,849,743) | - |
| 105 | Prepaid Expenses: Transmission (incremental FERC Rates) | - | - |
| 106 | Prepaid Expenses: Distribution | (135,016) | - |
| 107 | Prepaid Expenses: Renewables | - | - |
| 108 | Regulatory Assets - 2024 Rate Change | (153,396) | 20,453 |
| 109 | Regulatory Assets - 2025 Rate Change | (213,503) | 8,540 |
| 110 | Regulatory Assets - SJGS Obsolete Inventory | (1,319,042) | 5,329 |
| 111 | Regulatory Liabilities - Earnings Test | - | - |
| 112 | Regulatory Assets - PVNGS Lease costs | (1,691) | 423 |
| 113 | Regulatory Assets - PVNGS Undepreciated Investment | (9,176,435) | 48,942 |
| 114 | Regulatory Assets - ETC Over/Under SPE | - | - |
| 115 | Regulatory Assets - PVNGS Replacement Resources | (411,337) | 2,194 |
| 116 | Regulatory Assets - Rate Rider 12 UG Rate | - | - |
| 117 | Regulatory Assets - Renewable Rider Curr Reg | - | - |
| 118 | Regulatory Assets - SJ Energy Transition Property (SPE) | (76,392,255) | 273,415 |
| 119 | Regulatory Liabilities - Curr Reg Liab-UG Rate Rider 12 | - | - |
| 120 | Regulatory Liabilities - ITC Sandia | 6,142,286 | (118,121) |
| 121 | Regulatory Liabilities - ITC Sunbelt | - | 20,058,289 |
| 122 | Regulatory Liabilities - ITC - Distribution Battery Phase 2 | 5,489,404 | (99,807) |
| 123 | Regulatory Liabilities - Energy Transition Cost True Up | 270,641 | (1,114) |
| 124 | Regulatory Liabilities - SJGS Retirements Rate Credit | 7,935 | (1,984) |
| 125 | Regulatory Liabilities - PVNGS Lease Costs | - | - |
| 126 | Deferred Debits - WS-Transmission Revenue | - | - |
| 127 | Customer Advance | - | - |
| 128 | Deferred Credits - ETA | - | - |
| 129 | Other Liabilities - ETA Coal Mine Severance | - | - |
| 130 | Other Liabilities - ETA State Agency Payments | - | - |
| 131 | SJGS County Ordinance Decommission | - | - |
| 132 | | | |
| 133 | **Total Accumulated Deferred Income Taxes** | (766,485,080) | (76,698,060) |
| 134 | | | |
| 135 | General Ledger ADIT Balance | | |
| 136 | | | |
| 137 | Difference (Rounding) | | |

| | A | CL | CM |
|---|---|---|---|
| 1 | **Public Service Company of New Mexico** | | |
| 2 | **Schedule H-12** | | |
| 3 | **Accumulated Tax Deferrals** | | |
| 4 | **Base Period Ending 6/30/2026** | | |
| 5 | **Test Period Ending 9/30/2028** | | |
| 6 | **This schedule is sponsored by PNM Witness Morris** | | |
| 7 | | | |
| 8 | | | |
| 9 | | **30-Jun-28** | |
| 10 | | **Balance** | **Activity** |
| 11 | **Accumulated Deferred Income Taxes** | | |
| 12 | Federal Tax Credit Carryforward | 21,743,653 | - |
| 13 | Federal Tax Credit Carryforward - Renewables | - | - |
| 14 | Net Operating Loss (NOL) | 53,415,338 | - |
| 15 | Incentive Pay Plans | - | - |
| 16 | Regulatory Assets - Coal Mine Decommissioning | - | - |
| 17 | Regulatory Liabilities - Renewable Rider | - | - |
| 18 | Income Tax Regulatory Liability | 90,383,235 | 635,720 |
| 19 | Income Tax Regulatory Asset | (65,518,006) | - |
| 20 | Investment Tax Credit 2024 | 7,393,757 | - |
| 21 | Investment Tax Credit - Sandia | - | - |
| 22 | Investment Tax Credit - Sunbelt | - | - |
| 23 | Investment Tax Credit - Distribution Battery Phase 2 | - | - |
| 24 | Lease Liability | - | - |
| 25 | Deferred Credits - Coal Mine Decommissioning | - | - |
| 26 | Regulatory Assets - ETA Carrying Charges | - | - |
| 27 | Regulatory Assets - ETA Job Training & Severance | - | - |
| 28 | Regulatory Assets - ETA Payments to State Agencies | - | - |
| 29 | Regulatory Assets - ETA SJGS Plant Decommissioning | - | - |
| 30 | Regulatory Assets - ETA SJGS upfront Financing Cost | - | - |
| 31 | Regulatory Assets - ETA Westmoreland Coal Mine Sev | - | - |
| 32 | Deferred Credits - Joint Use | 74,534 | (3,549) |
| 33 | Deferred Credits - Pathnet | 1,355,320 | (1,801) |
| 34 | Deferred Credits - PVNGS Dry Casks | - | - |
| 35 | Other Deferred Credits | - | - |
| 36 | Other Liabilities - ETA Job Training and Severance | - | - |
| 37 | Other Liabilities - Navajo Workforce Training | - | - |
| 38 | Other Liabilities | - | - |
| 39 | Blackstone Transaction Costs | - | - |
| 40 | Injury and Damages | 2,058,181 | - |
| 41 | Plant - AFUDC | (47,600,842) | (386,087) |
| 42 | Plant - Capitalized Interest | 17,607,447 | - |
| 43 | Decommissioning and Reclamation Trusts | - | - |
| 44 | ASC 740-10 (FIN 48) Reclassifications | - | - |
| 45 | Estimated Tax Rate Adjustment | - | - |
| 46 | PVNGS Licensing | 0 | - |
| 47 | Plant - 263A Adjustment | (80,078,392) | - |
| 48 | Deferred State Taxes | - | - |
| 49 | Plant - CIAC | 26,503,887 | - |
| 50 | Plant - Depreciation Nuclear Fuel | 10,187,815 | (279,745) |
| 51 | Plant - Removal Cost | (4,446,299) | - |
| 52 | Plant - Repairs | (218,018,080) | (1,076,509) |
| 53 | Plant - Section 174 Deduction | 7,509,732 | - |
| 54 | Plant - Asset Retirement Obligation | 10,706,853 | 48,180 |

| | A | CL | CM |
|---|---|---|---|
| 1 | **Public Service Company of New Mexico** | | |
| 2 | **Schedule H-12** | | |
| 3 | **Accumulated Tax Deferrals** | | |
| 4 | **Base Period Ending 6/30/2026** | | |
| 5 | **Test Period Ending 9/30/2028** | | |
| 6 | **This schedule is sponsored by PNM Witness Morris** | | |
| 7 | | | |
| 8 | | | |
| 9 | | **30-Jun-28** | |
| 10 | | **Balance** | **Activity** |
| 55 | Plant - Pollution Control Property | (2,154,701) | - |
| 56 | Plant - Liberalized Depreciation: Production | (144,291,768) | 970,415 |
| 57 | Plant - Liberalized Depreciation: Transmission | (154,284,866) | 703,752 |
| 58 | Plant - Liberalized Depreciation: Distribution | (178,772,012) | (3,519,482) |
| 59 | Plant - Liberalized Depreciation: General and Intangible | (7,472,895) | 910,932 |
| 60 | Plant - Liberalized Depreciation: Grid Mod | (19,637,471) | (448,826) |
| 61 | Plant - Liberalized Depreciation: Renewables | (45,562,152) | 192,688 |
| 62 | Plant - Four Corners Imprudence | - | - |
| 63 | Regulatory Assets - SJGS Stranded Costs Units 2&3 | (15,279,125) | 132,862 |
| 64 | Pension | (36,962,982) | 91,089 |
| 65 | Retiree Medical | - | - |
| 66 | Lease Asset | - | - |
| 67 | Loss on Reacquired Debt | (792,968) | 8,293 |
| 68 | Other Comprehensive Income (OCI) | - | - |
| 69 | Deferred Credits - SO2 Allowance | - | - |
| 70 | Deferred Debits - Rate Case Expense | (893,178) | 17,513 |
| 71 | Deferred Debits - Decoupling | - | - |
| 72 | Deferred Debits - Grid Modernization | - | - |
| 73 | Deferred Debits - RR Underground Rider | - | - |
| 74 | Energy Storage Agreement | (7,496,513) | 32,452 |
| 75 | Energy Transition Charges | - | - |
| 76 | Prepaid Expenses | (1,168,330) | - |
| 77 | Regulatory Assets - 2024 COVID Bad Debt | - | - |
| 78 | Regulatory Assets - COVID-19 Costs | (75,138) | 5,009 |
| 79 | Regulatory Assets - Community Solar | (784,655) | 13,122 |
| 80 | Regulatory assets - FAC | 0 | - |
| 81 | Regulatory Assets - EDAM Costs | (668,934) | 13,116 |
| 82 | Regulatory Assets - EIM Costs | (517,057) | 79,547 |
| 83 | Regulatory Assets - Energy Efficiency | (109,693) | 2,151 |
| 84 | Regulatory Assets - ETA | - | - |
| 85 | Regulatory Assets - FERC 893 Cyber | - | - |
| 86 | Regulatory Assets - IRP | (38,661) | 758 |
| 87 | Regulatory Assets - Sky Blue Under Recovery | - | - |
| 88 | Regulatory Assets - Renewable Energy | 2,363,253 | (24,267) |
| 89 | Regulatory Assets - Renewable Energy Credits | (78,530) | - |
| 90 | Regulatory Assets - SJGS External Legal Fees | (103,274) | 419 |
| 91 | Regulatory Assets - SJGS Final ETA Depcom | - | - |
| 92 | Regulatory Assets - SJGS Final ETA Mine Rec | - | - |
| 93 | Regulatory Assets - SJGS Replacement Resources | (1,736,107) | 7,043 |
| 94 | Regulatory Assets - SJGS Undepreciated Investment | - | - |
| 95 | Regulatory Assets - SJGS Underground Coal Mine | - | - |
| 96 | Regulatory Assets - Solar Direct Regulatory Assets | - | - |
| 97 | Regulatory Assets - TOD Rate Pilot Program | (667,078) | 13,080 |
| 98 | Regulatory Assets - Transportation Electrification | - | - |

| | A | CL | CM |
|---|---|---|---|
| 1 | **Public Service Company of New Mexico** | | |
| 2 | **Schedule H-12** | | |
| 3 | **Accumulated Tax Deferrals** | | |
| 4 | **Base Period Ending 6/30/2026** | | |
| 5 | **Test Period Ending 9/30/2028** | | |
| 6 | **This schedule is sponsored by PNM Witness Morris** | | |
| 7 | | | |
| 8 | | | |
| 9 | | **30-Jun-28** | |
| 10 | | **Balance** | **Activity** |
| 99 | Regulatory Assets - WCC Transaction Costs | - | - |
| 100 | Regulatory Liabilities - Energy Efficiency | - | - |
| 101 | Regulatory Liabilities - FAC | - | - |
| 102 | Regulatory Assets - PCB Refinancing Hedge | (1,285,007) | 17,874 |
| 103 | Prepaid Expenses: Production | (445,840) | - |
| 104 | Prepaid Expenses: Transmission | (1,849,743) | - |
| 105 | Prepaid Expenses: Transmission (incremental FERC Rates) | - | - |
| 106 | Prepaid Expenses: Distribution | (135,016) | - |
| 107 | Prepaid Expenses: Renewables | - | - |
| 108 | Regulatory Assets - 2024 Rate Change | (132,943) | 20,453 |
| 109 | Regulatory Assets - 2025 Rate Change | (204,963) | 8,540 |
| 110 | Regulatory Assets - SJGS Obsolete Inventory | (1,313,713) | 5,329 |
| 111 | Regulatory Liabilities - Earnings Test | - | - |
| 112 | Regulatory Assets - PVNGS Lease costs | (1,268) | 423 |
| 113 | Regulatory Assets - PVNGS Undepreciated Investment | (9,127,493) | 48,942 |
| 114 | Regulatory Assets - ETC Over/Under SPE | - | - |
| 115 | Regulatory Assets - PVNGS Replacement Resources | (409,143) | 2,194 |
| 116 | Regulatory Assets - Rate Rider 12 UG Rate | - | - |
| 117 | Regulatory Assets - Renewable Rider Curr Reg | - | - |
| 118 | Regulatory Assets - SJ Energy Transition Property (SPE) | (76,118,840) | 273,415 |
| 119 | Regulatory Liabilities - Curr Reg Liab-UG Rate Rider 12 | - | - |
| 120 | Regulatory Liabilities - ITC Sandia | 6,024,166 | (118,121) |
| 121 | Regulatory Liabilities - ITC Sunbelt | 20,058,289 | (334,305) |
| 122 | Regulatory Liabilities - ITC - Distribution Battery Phase 2 | 5,389,596 | (99,807) |
| 123 | Regulatory Liabilities - Energy Transition Cost True Up | 269,527 | (1,114) |
| 124 | Regulatory Liabilities - SJGS Retirements Rate Credit | 5,951 | (1,984) |
| 125 | Regulatory Liabilities - PVNGS Lease Costs | - | - |
| 126 | Deferred Debits - WS-Transmission Revenue | - | - |
| 127 | Customer Advance | - | - |
| 128 | Deferred Credits - ETA | - | - |
| 129 | Other Liabilities - ETA Coal Mine Severance | - | - |
| 130 | Other Liabilities - ETA State Agency Payments | - | - |
| 131 | SJGS County Ordinance Decommission | - | - |
| 132 | | | |
| 133 | **Total Accumulated Deferred Income Taxes** | (843,183,140) | (2,040,284) |
| 134 | | | |
| 135 | General Ledger ADIT Balance | | |
| 136 | | | |
| 137 | Difference (Rounding) | | |

| | A | CN | CO |
|---|---|---|---|
| 1 | **Public Service Company of New Mexico** | | |
| 2 | **Schedule H-12** | | |
| 3 | **Accumulated Tax Deferrals** | | |
| 4 | **Base Period Ending 6/30/2026** | | |
| 5 | **Test Period Ending 9/30/2028** | | |
| 6 | **This schedule is sponsored by PNM Witness Morris** | | |
| 7 | | | |
| 8 | | | |
| 9 | | **31-Jul-28** | |
| 10 | | **Balance** | **Activity** |
| 11 | **Accumulated Deferred Income Taxes** | | |
| 12 | Federal Tax Credit Carryforward | 21,743,653 | - |
| 13 | Federal Tax Credit Carryforward - Renewables | - | - |
| 14 | Net Operating Loss (NOL) | 53,415,338 | - |
| 15 | Incentive Pay Plans | - | - |
| 16 | Regulatory Assets - Coal Mine Decommissioning | - | - |
| 17 | Regulatory Liabilities - Renewable Rider | - | - |
| 18 | Income Tax Regulatory Liability | 91,018,955 | 635,720 |
| 19 | Income Tax Regulatory Asset | (65,518,006) | - |
| 20 | Investment Tax Credit 2024 | 7,393,757 | - |
| 21 | Investment Tax Credit - Sandia | - | - |
| 22 | Investment Tax Credit - Sunbelt | - | - |
| 23 | Investment Tax Credit - Distribution Battery Phase 2 | - | - |
| 24 | Lease Liability | - | - |
| 25 | Deferred Credits - Coal Mine Decommissioning | - | - |
| 26 | Regulatory Assets - ETA Carrying Charges | - | - |
| 27 | Regulatory Assets - ETA Job Training & Severance | - | - |
| 28 | Regulatory Assets - ETA Payments to State Agencies | - | - |
| 29 | Regulatory Assets - ETA SJGS Plant Decommissioning | - | - |
| 30 | Regulatory Assets - ETA SJGS upfront Financing Cost | - | - |
| 31 | Regulatory Assets - ETA Westmoreland Coal Mine Sev | - | - |
| 32 | Deferred Credits - Joint Use | 70,984 | (3,549) |
| 33 | Deferred Credits - Pathnet | 1,353,519 | (1,801) |
| 34 | Deferred Credits - PVNGS Dry Casks | - | - |
| 35 | Other Deferred Credits | - | - |
| 36 | Other Liabilities - ETA Job Training and Severance | - | - |
| 37 | Other Liabilities - Navajo Workforce Training | - | - |
| 38 | Other Liabilities | - | - |
| 39 | Blackstone Transaction Costs | - | - |
| 40 | Injury and Damages | 2,058,181 | - |
| 41 | Plant - AFUDC | (47,986,929) | (410,397) |
| 42 | Plant - Capitalized Interest | 17,607,447 | - |
| 43 | Decommissioning and Reclamation Trusts | - | - |
| 44 | ASC 740-10 (FIN 48) Reclassifications | - | - |
| 45 | Estimated Tax Rate Adjustment | - | - |
| 46 | PVNGS Licensing | 0 | - |
| 47 | Plant - 263A Adjustment | (80,078,392) | - |
| 48 | Deferred State Taxes | - | - |
| 49 | Plant - CIAC | 26,503,887 | - |
| 50 | Plant - Depreciation Nuclear Fuel | 9,908,071 | (279,450) |
| 51 | Plant - Removal Cost | (4,446,299) | - |
| 52 | Plant - Repairs | (219,094,589) | (1,899,152) |
| 53 | Plant - Section 174 Deduction | 7,509,732 | - |
| 54 | Plant - Asset Retirement Obligation | 10,755,033 | 48,436 |

| | A | CN | CO |
|---|---|---|---|
| 1 | **Public Service Company of New Mexico** | | |
| 2 | **Schedule H-12** | | |
| 3 | **Accumulated Tax Deferrals** | | |
| 4 | **Base Period Ending 6/30/2026** | | |
| 5 | **Test Period Ending 9/30/2028** | | |
| 6 | **This schedule is sponsored by PNM Witness Morris** | | |
| 7 | | | |
| 8 | | | |
| 9 | | **31-Jul-28** | |
| 10 | | **Balance** | **Activity** |
| 55 | Plant - Pollution Control Property | (2,154,701) | - |
| 56 | Plant - Liberalized Depreciation: Production | (143,321,353) | 1,104,083 |
| 57 | Plant - Liberalized Depreciation: Transmission | (153,581,114) | (3,635,828) |
| 58 | Plant - Liberalized Depreciation: Distribution | (182,291,495) | 132,049 |
| 59 | Plant - Liberalized Depreciation: General and Intangible | (6,561,963) | 856,567 |
| 60 | Plant - Liberalized Depreciation: Grid Mod | (20,086,297) | 227,268 |
| 61 | Plant - Liberalized Depreciation: Renewables | (45,369,463) | 187,820 |
| 62 | Plant - Four Corners Imprudence | - | - |
| 63 | Regulatory Assets - SJGS Stranded Costs Units 2&3 | (15,146,263) | 132,862 |
| 64 | Pension | (36,871,892) | 91,089 |
| 65 | Retiree Medical | - | - |
| 66 | Lease Asset | - | - |
| 67 | Loss on Reacquired Debt | (784,675) | 8,293 |
| 68 | Other Comprehensive Income (OCI) | - | - |
| 69 | Deferred Credits - SO2 Allowance | - | - |
| 70 | Deferred Debits - Rate Case Expense | (875,665) | 17,513 |
| 71 | Deferred Debits - Decoupling | - | - |
| 72 | Deferred Debits - Grid Modernization | - | - |
| 73 | Deferred Debits - RR Underground Rider | - | - |
| 74 | Energy Storage Agreement | (7,464,060) | 32,452 |
| 75 | Energy Transition Charges | - | - |
| 76 | Prepaid Expenses | (1,168,330) | - |
| 77 | Regulatory Assets - 2024 COVID Bad Debt | - | - |
| 78 | Regulatory Assets - COVID-19 Costs | (70,129) | 5,009 |
| 79 | Regulatory Assets - Community Solar | (771,533) | 13,122 |
| 80 | Regulatory assets - FAC | 0 | - |
| 81 | Regulatory Assets - EDAM Costs | (655,817) | 13,116 |
| 82 | Regulatory Assets - EIM Costs | (437,510) | 79,547 |
| 83 | Regulatory Assets - Energy Efficiency | (107,543) | 2,151 |
| 84 | Regulatory Assets - ETA | - | - |
| 85 | Regulatory Assets - FERC 893 Cyber | - | - |
| 86 | Regulatory Assets - IRP | (37,903) | 758 |
| 87 | Regulatory Assets - Sky Blue Under Recovery | - | - |
| 88 | Regulatory Assets - Renewable Energy | 2,338,986 | (24,267) |
| 89 | Regulatory Assets - Renewable Energy Credits | (78,530) | - |
| 90 | Regulatory Assets - SJGS External Legal Fees | (102,855) | 419 |
| 91 | Regulatory Assets - SJGS Final ETA Depcom | - | - |
| 92 | Regulatory Assets - SJGS Final ETA Mine Rec | - | - |
| 93 | Regulatory Assets - SJGS Replacement Resources | (1,729,064) | 7,043 |
| 94 | Regulatory Assets - SJGS Undepreciated Investment | - | - |
| 95 | Regulatory Assets - SJGS Underground Coal Mine | - | - |
| 96 | Regulatory Assets - Solar Direct Regulatory Assets | - | - |
| 97 | Regulatory Assets - TOD Rate Pilot Program | (653,998) | 13,080 |
| 98 | Regulatory Assets - Transportation Electrification | - | - |

| | A | CN | CO |
|---|---|---|---|
| 1 | **Public Service Company of New Mexico** | | |
| 2 | **Schedule H-12** | | |
| 3 | **Accumulated Tax Deferrals** | | |
| 4 | **Base Period Ending 6/30/2026** | | |
| 5 | **Test Period Ending 9/30/2028** | | |
| 6 | **This schedule is sponsored by PNM Witness Morris** | | |
| 7 | | | |
| 8 | | | |
| 9 | | **31-Jul-28** | |
| 10 | | **Balance** | **Activity** |
| 99 | Regulatory Assets - WCC Transaction Costs | - | - |
| 100 | Regulatory Liabilities - Energy Efficiency | - | - |
| 101 | Regulatory Liabilities - FAC | - | - |
| 102 | Regulatory Assets - PCB Refinancing Hedge | (1,267,133) | 17,874 |
| 103 | Prepaid Expenses: Production | (445,840) | - |
| 104 | Prepaid Expenses: Transmission | (1,849,743) | - |
| 105 | Prepaid Expenses: Transmission (incremental FERC Rates) | - | - |
| 106 | Prepaid Expenses: Distribution | (135,016) | - |
| 107 | Prepaid Expenses: Renewables | - | - |
| 108 | Regulatory Assets - 2024 Rate Change | (112,490) | 20,453 |
| 109 | Regulatory Assets - 2025 Rate Change | (196,422) | 8,540 |
| 110 | Regulatory Assets - SJGS Obsolete Inventory | (1,308,383) | 5,329 |
| 111 | Regulatory Liabilities - Earnings Test | - | - |
| 112 | Regulatory Assets - PVNGS Lease costs | (845) | 423 |
| 113 | Regulatory Assets - PVNGS Undepreciated Investment | (9,078,551) | 48,942 |
| 114 | Regulatory Assets - ETC Over/Under SPE | - | - |
| 115 | Regulatory Assets - PVNGS Replacement Resources | (406,950) | 2,194 |
| 116 | Regulatory Assets - Rate Rider 12 UG Rate | - | - |
| 117 | Regulatory Assets - Renewable Rider Curr Reg | - | - |
| 118 | Regulatory Assets - SJ Energy Transition Property (SPE) | (75,845,425) | 273,415 |
| 119 | Regulatory Liabilities - Curr Reg Liab-UG Rate Rider 12 | - | - |
| 120 | Regulatory Liabilities - ITC Sandia | 5,906,045 | (118,121) |
| 121 | Regulatory Liabilities - ITC Sunbelt | 19,723,985 | (334,305) |
| 122 | Regulatory Liabilities - ITC - Distribution Battery Phase 2 | 5,289,789 | (99,807) |
| 123 | Regulatory Liabilities - Energy Transition Cost True Up | 268,414 | (1,114) |
| 124 | Regulatory Liabilities - SJGS Retirements Rate Credit | 3,967 | (1,984) |
| 125 | Regulatory Liabilities - PVNGS Lease Costs | - | - |
| 126 | Deferred Debits - WS-Transmission Revenue | - | - |
| 127 | Customer Advance | - | - |
| 128 | Deferred Credits - ETA | - | - |
| 129 | Other Liabilities - ETA Coal Mine Severance | - | - |
| 130 | Other Liabilities - ETA State Agency Payments | - | - |
| 131 | SJGS County Ordinance Decommission | - | - |
| 132 | | | |
| 133 | **Total Accumulated Deferred Income Taxes** | (845,223,425) | (2,824,207) |
| 134 | | | |
| 135 | General Ledger ADIT Balance | | |
| 136 | | | |
| 137 | Difference (Rounding) | | |

| | A | CP | CQ |
|---|---|---|---|
| 1 | **Public Service Company of New Mexico** | | |
| 2 | **Schedule H-12** | | |
| 3 | **Accumulated Tax Deferrals** | | |
| 4 | **Base Period Ending 6/30/2026** | | |
| 5 | **Test Period Ending 9/30/2028** | | |
| 6 | **This schedule is sponsored by PNM Witness Morris** | | |
| 7 | | | |
| 8 | | | |
| 9 | | **31-Aug-28** | |
| 10 | | **Balance** | **Activity** |
| 11 | **Accumulated Deferred Income Taxes** | | |
| 12 | Federal Tax Credit Carryforward | 21,743,653 | - |
| 13 | Federal Tax Credit Carryforward - Renewables | - | - |
| 14 | Net Operating Loss (NOL) | 53,415,338 | - |
| 15 | Incentive Pay Plans | - | - |
| 16 | Regulatory Assets - Coal Mine Decommissioning | - | - |
| 17 | Regulatory Liabilities - Renewable Rider | - | - |
| 18 | Income Tax Regulatory Liability | 91,654,675 | 635,720 |
| 19 | Income Tax Regulatory Asset | (65,518,006) | - |
| 20 | Investment Tax Credit 2024 | 7,393,757 | - |
| 21 | Investment Tax Credit - Sandia | - | - |
| 22 | Investment Tax Credit - Sunbelt | - | - |
| 23 | Investment Tax Credit - Distribution Battery Phase 2 | - | - |
| 24 | Lease Liability | - | - |
| 25 | Deferred Credits - Coal Mine Decommissioning | - | - |
| 26 | Regulatory Assets - ETA Carrying Charges | - | - |
| 27 | Regulatory Assets - ETA Job Training & Severance | - | - |
| 28 | Regulatory Assets - ETA Payments to State Agencies | - | - |
| 29 | Regulatory Assets - ETA SJGS Plant Decommissioning | - | - |
| 30 | Regulatory Assets - ETA SJGS upfront Financing Cost | - | - |
| 31 | Regulatory Assets - ETA Westmoreland Coal Mine Sev | - | - |
| 32 | Deferred Credits - Joint Use | 67,435 | (3,549) |
| 33 | Deferred Credits - Pathnet | 1,351,718 | (1,801) |
| 34 | Deferred Credits - PVNGS Dry Casks | - | - |
| 35 | Other Deferred Credits | - | - |
| 36 | Other Liabilities - ETA Job Training and Severance | - | - |
| 37 | Other Liabilities - Navajo Workforce Training | - | - |
| 38 | Other Liabilities | - | - |
| 39 | Blackstone Transaction Costs | - | - |
| 40 | Injury and Damages | 2,058,181 | - |
| 41 | Plant - AFUDC | (48,397,325) | (386,950) |
| 42 | Plant - Capitalized Interest | 17,607,447 | - |
| 43 | Decommissioning and Reclamation Trusts | - | - |
| 44 | ASC 740-10 (FIN 48) Reclassifications | - | - |
| 45 | Estimated Tax Rate Adjustment | - | - |
| 46 | PVNGS Licensing | 0 | - |
| 47 | Plant - 263A Adjustment | (80,078,392) | - |
| 48 | Deferred State Taxes | - | - |
| 49 | Plant - CIAC | 26,503,887 | - |
| 50 | Plant - Depreciation Nuclear Fuel | 9,628,621 | 142,471 |
| 51 | Plant - Removal Cost | (4,446,299) | - |
| 52 | Plant - Repairs | (220,993,742) | (3,823,928) |
| 53 | Plant - Section 174 Deduction | 7,509,732 | - |
| 54 | Plant - Asset Retirement Obligation | 10,803,468 | 48,693 |

| | A | CP | CQ |
|---|---|---|---|
| 1 | **Public Service Company of New Mexico** | | |
| 2 | **Schedule H-12** | | |
| 3 | **Accumulated Tax Deferrals** | | |
| 4 | **Base Period Ending 6/30/2026** | | |
| 5 | **Test Period Ending 9/30/2028** | | |
| 6 | **This schedule is sponsored by PNM Witness Morris** | | |
| 7 | | | |
| 8 | | | |
| 9 | | **31-Aug-28** | |
| 10 | | **Balance** | **Activity** |
| 55 | Plant - Pollution Control Property | (2,154,701) | - |
| 56 | Plant - Liberalized Depreciation: Production | (142,217,270) | 1,249,455 |
| 57 | Plant - Liberalized Depreciation: Transmission | (157,216,942) | (1,615,242) |
| 58 | Plant - Liberalized Depreciation: Distribution | (182,159,446) | (1,848,626) |
| 59 | Plant - Liberalized Depreciation: General and Intangible | (5,705,396) | 744,590 |
| 60 | Plant - Liberalized Depreciation: Grid Mod | (19,859,029) | 191,991 |
| 61 | Plant - Liberalized Depreciation: Renewables | (45,181,643) | - |
| 62 | Plant - Four Corners Imprudence | - | - |
| 63 | Regulatory Assets - SJGS Stranded Costs Units 2&3 | (15,013,401) | 132,862 |
| 64 | Pension | (36,780,803) | 91,089 |
| 65 | Retiree Medical | - | - |
| 66 | Lease Asset | - | - |
| 67 | Loss on Reacquired Debt | (776,382) | 8,293 |
| 68 | Other Comprehensive Income (OCI) | - | - |
| 69 | Deferred Credits - SO2 Allowance | - | - |
| 70 | Deferred Debits - Rate Case Expense | (858,152) | 17,513 |
| 71 | Deferred Debits - Decoupling | - | - |
| 72 | Deferred Debits - Grid Modernization | - | - |
| 73 | Deferred Debits - RR Underground Rider | - | - |
| 74 | Energy Storage Agreement | (7,431,608) | 32,452 |
| 75 | Energy Transition Charges | - | - |
| 76 | Prepaid Expenses | (1,168,330) | - |
| 77 | Regulatory Assets - 2024 COVID Bad Debt | - | - |
| 78 | Regulatory Assets - COVID-19 Costs | (65,120) | 5,009 |
| 79 | Regulatory Assets - Community Solar | (758,411) | 13,122 |
| 80 | Regulatory assets - FAC | 0 | - |
| 81 | Regulatory Assets - EDAM Costs | (642,701) | 13,116 |
| 82 | Regulatory Assets - EIM Costs | (357,963) | 79,547 |
| 83 | Regulatory Assets - Energy Efficiency | (105,392) | 2,151 |
| 84 | Regulatory Assets - ETA | - | - |
| 85 | Regulatory Assets - FERC 893 Cyber | - | - |
| 86 | Regulatory Assets - IRP | (37,145) | 758 |
| 87 | Regulatory Assets - Sky Blue Under Recovery | - | - |
| 88 | Regulatory Assets - Renewable Energy | 2,314,719 | (24,267) |
| 89 | Regulatory Assets - Renewable Energy Credits | (78,530) | - |
| 90 | Regulatory Assets - SJGS External Legal Fees | (102,436) | 419 |
| 91 | Regulatory Assets - SJGS Final ETA Depcom | - | - |
| 92 | Regulatory Assets - SJGS Final ETA Mine Rec | - | - |
| 93 | Regulatory Assets - SJGS Replacement Resources | (1,722,021) | 7,043 |
| 94 | Regulatory Assets - SJGS Undepreciated Investment | - | - |
| 95 | Regulatory Assets - SJGS Underground Coal Mine | - | - |
| 96 | Regulatory Assets - Solar Direct Regulatory Assets | - | - |
| 97 | Regulatory Assets - TOD Rate Pilot Program | (640,918) | 13,080 |
| 98 | Regulatory Assets - Transportation Electrification | - | - |

| | A | CP | CQ |
|---|---|---|---|
| 1 | **Public Service Company of New Mexico** | | |
| 2 | **Schedule H-12** | | |
| 3 | **Accumulated Tax Deferrals** | | |
| 4 | **Base Period Ending 6/30/2026** | | |
| 5 | **Test Period Ending 9/30/2028** | | |
| 6 | **This schedule is sponsored by PNM Witness Morris** | | |
| 7 | | | |
| 8 | | | |
| 9 | | **31-Aug-28** | |
| 10 | | **Balance** | **Activity** |
| 99 | Regulatory Assets - WCC Transaction Costs | - | - |
| 100 | Regulatory Liabilities - Energy Efficiency | - | - |
| 101 | Regulatory Liabilities - FAC | - | - |
| 102 | Regulatory Assets - PCB Refinancing Hedge | (1,249,259) | 17,874 |
| 103 | Prepaid Expenses: Production | (445,840) | - |
| 104 | Prepaid Expenses: Transmission | (1,849,743) | - |
| 105 | Prepaid Expenses: Transmission (incremental FERC Rates) | - | - |
| 106 | Prepaid Expenses: Distribution | (135,016) | - |
| 107 | Prepaid Expenses: Renewables | - | - |
| 108 | Regulatory Assets - 2024 Rate Change | (92,038) | 20,453 |
| 109 | Regulatory Assets - 2025 Rate Change | (187,882) | 8,540 |
| 110 | Regulatory Assets - SJGS Obsolete Inventory | (1,303,054) | 5,329 |
| 111 | Regulatory Liabilities - Earnings Test | - | - |
| 112 | Regulatory Assets - PVNGS Lease costs | (423) | 423 |
| 113 | Regulatory Assets - PVNGS Undepreciated Investment | (9,029,610) | 48,942 |
| 114 | Regulatory Assets - ETC Over/Under SPE | - | - |
| 115 | Regulatory Assets - PVNGS Replacement Resources | (404,756) | 2,194 |
| 116 | Regulatory Assets - Rate Rider 12 UG Rate | - | - |
| 117 | Regulatory Assets - Renewable Rider Curr Reg | - | - |
| 118 | Regulatory Assets - SJ Energy Transition Property (SPE) | (75,572,009) | 273,415 |
| 119 | Regulatory Liabilities - Curr Reg Liab-UG Rate Rider 12 | - | - |
| 120 | Regulatory Liabilities - ITC Sandia | 5,787,924 | (118,121) |
| 121 | Regulatory Liabilities - ITC Sunbelt | 19,389,680 | (334,305) |
| 122 | Regulatory Liabilities - ITC - Distribution Battery Phase 2 | 5,189,982 | (99,807) |
| 123 | Regulatory Liabilities - Energy Transition Cost True Up | 267,300 | (1,114) |
| 124 | Regulatory Liabilities - SJGS Retirements Rate Credit | 1,984 | (1,984) |
| 125 | Regulatory Liabilities - PVNGS Lease Costs | - | - |
| 126 | Deferred Debits - WS-Transmission Revenue | - | - |
| 127 | Customer Advance | - | - |
| 128 | Deferred Credits - ETA | - | - |
| 129 | Other Liabilities - ETA Coal Mine Severance | - | - |
| 130 | Other Liabilities - ETA State Agency Payments | - | - |
| 131 | SJGS County Ordinance Decommission | - | - |
| 132 | | | |
| 133 | **Total Accumulated Deferred Income Taxes** | (848,047,631) | (4,453,147) |
| 134 | | | |
| 135 | General Ledger ADIT Balance | | |
| 136 | | | |
| 137 | Difference (Rounding) | | |

| | A | CR | CS |
|---|---|---|---|
| 1 | **Public Service Company of New Mexico** | | |
| 2 | **Schedule H-12** | | |
| 3 | **Accumulated Tax Deferrals** | | |
| 4 | **Base Period Ending 6/30/2026** | | |
| 5 | **Test Period Ending 9/30/2028** | | |
| 6 | **This schedule is sponsored by PNM Witness Morris** | | |
| 7 | | | |
| 8 | | | |
| 9 | | **30-Sep-28** | **Test Period** |
| 10 | | **Balance** | **Adjustments** |
| 11 | **Accumulated Deferred Income Taxes** | | |
| 12 | Federal Tax Credit Carryforward | 21,743,653 | - |
| 13 | Federal Tax Credit Carryforward - Renewables | - | - |
| 14 | Net Operating Loss (NOL) | 53,415,338 | - |
| 15 | Incentive Pay Plans | - | - |
| 16 | Regulatory Assets - Coal Mine Decommissioning | - | - |
| 17 | Regulatory Liabilities - Renewable Rider | - | - |
| 18 | Income Tax Regulatory Liability | 92,290,395 | (4,825,411) |
| 19 | Income Tax Regulatory Asset | (65,518,006) | - |
| 20 | Investment Tax Credit 2024 | 7,393,757 | - |
| 21 | Investment Tax Credit - Sandia | - | - |
| 22 | Investment Tax Credit - Sunbelt | - | 6,982,285 |
| 23 | Investment Tax Credit - Distribution Battery Phase 2 | - | 2,084,574 |
| 24 | Lease Liability | - | - |
| 25 | Deferred Credits - Coal Mine Decommissioning | - | - |
| 26 | Regulatory Assets - ETA Carrying Charges | - | - |
| 27 | Regulatory Assets - ETA Job Training & Severance | - | - |
| 28 | Regulatory Assets - ETA Payments to State Agencies | - | - |
| 29 | Regulatory Assets - ETA SJGS Plant Decommissioning | - | - |
| 30 | Regulatory Assets - ETA SJGS upfront Financing Cost | - | - |
| 31 | Regulatory Assets - ETA Westmoreland Coal Mine Sev | - | - |
| 32 | Deferred Credits - Joint Use | 63,886 | 21,295 |
| 33 | Deferred Credits - Pathnet | 1,349,917 | 10,807 |
| 34 | Deferred Credits - PVNGS Dry Casks | - | - |
| 35 | Other Deferred Credits | - | - |
| 36 | Other Liabilities - ETA Job Training and Severance | - | - |
| 37 | Other Liabilities - Navajo Workforce Training | - | - |
| 38 | Other Liabilities | - | - |
| 39 | Blackstone Transaction Costs | - | - |
| 40 | Injury and Damages | 2,058,181 | - |
| 41 | Plant - AFUDC | (48,784,275) | 2,501,197 |
| 42 | Plant - Capitalized Interest | 17,607,447 | - |
| 43 | Decommissioning and Reclamation Trusts | - | - |
| 44 | ASC 740-10 (FIN 48) Reclassifications | - | - |
| 45 | Estimated Tax Rate Adjustment | - | - |
| 46 | PVNGS Licensing | 0 | - |
| 47 | Plant - 263A Adjustment | (80,078,392) | - |
| 48 | Deferred State Taxes | - | - |
| 49 | Plant - CIAC | 26,503,887 | - |
| 50 | Plant - Depreciation Nuclear Fuel | 9,771,091 | (395,904) |
| 51 | Plant - Removal Cost | (4,446,299) | - |
| 52 | Plant - Repairs | (224,817,670) | 16,042,662 |
| 53 | Plant - Section 174 Deduction | 7,509,732 | - |
| 54 | Plant - Asset Retirement Obligation | 10,852,161 | (287,381) |

| | A | CR | CS |
|---|---|---|---|
| 1 | **Public Service Company of New Mexico** | | |
| 2 | **Schedule H-12** | | |
| 3 | **Accumulated Tax Deferrals** | | |
| 4 | **Base Period Ending 6/30/2026** | | |
| 5 | **Test Period Ending 9/30/2028** | | |
| 6 | **This schedule is sponsored by PNM Witness Morris** | | |
| 7 | | | |
| 8 | | | |
| 9 | | **30-Sep-28** | **Test Period** |
| 10 | | **Balance** | **Adjustments** |
| 55 | Plant - Pollution Control Property | (2,154,701) | - |
| 56 | Plant - Liberalized Depreciation: Production | (140,967,815) | (5,395,624) |
| 57 | Plant - Liberalized Depreciation: Transmission | (158,832,184) | 10,774,199 |
| 58 | Plant - Liberalized Depreciation: Distribution | (184,008,072) | 6,147,415 |
| 59 | Plant - Liberalized Depreciation: General and Intangible | (4,960,806) | (4,993,433) |
| 60 | Plant - Liberalized Depreciation: Grid Mod | (19,667,038) | 1,931,763 |
| 61 | Plant - Liberalized Depreciation: Renewables | (45,181,643) | (956,618) |
| 62 | Plant - Four Corners Imprudence | - | - |
| 63 | Regulatory Assets - SJGS Stranded Costs Units 2&3 | (14,880,539) | (797,171) |
| 64 | Pension | (36,689,713) | (558,017) |
| 65 | Retiree Medical | - | - |
| 66 | Lease Asset | - | - |
| 67 | Loss on Reacquired Debt | (768,089) | (49,757) |
| 68 | Other Comprehensive Income (OCI) | - | - |
| 69 | Deferred Credits - SO2 Allowance | - | - |
| 70 | Deferred Debits - Rate Case Expense | (840,638) | (105,080) |
| 71 | Deferred Debits - Decoupling | - | - |
| 72 | Deferred Debits - Grid Modernization | - | - |
| 73 | Deferred Debits - RR Underground Rider | - | - |
| 74 | Energy Storage Agreement | (7,399,155) | (194,715) |
| 75 | Energy Transition Charges | - | - |
| 76 | Prepaid Expenses | (1,168,330) | - |
| 77 | Regulatory Assets - 2024 COVID Bad Debt | - | - |
| 78 | Regulatory Assets - COVID-19 Costs | (60,110) | (30,055) |
| 79 | Regulatory Assets - Community Solar | (745,288) | (78,734) |
| 80 | Regulatory assets - FAC | 0 | - |
| 81 | Regulatory Assets - EDAM Costs | (629,585) | (78,698) |
| 82 | Regulatory Assets - EIM Costs | (278,416) | (477,284) |
| 83 | Regulatory Assets - Energy Efficiency | (103,241) | (12,905) |
| 84 | Regulatory Assets - ETA | - | - |
| 85 | Regulatory Assets - FERC 893 Cyber | - | - |
| 86 | Regulatory Assets - IRP | (36,387) | (4,548) |
| 87 | Regulatory Assets - Sky Blue Under Recovery | - | - |
| 88 | Regulatory Assets - Renewable Energy | 2,290,452 | 145,601 |
| 89 | Regulatory Assets - Renewable Energy Credits | (78,530) | - |
| 90 | Regulatory Assets - SJGS External Legal Fees | (102,017) | (2,514) |
| 91 | Regulatory Assets - SJGS Final ETA Depcom | - | - |
| 92 | Regulatory Assets - SJGS Final ETA Mine Rec | - | - |
| 93 | Regulatory Assets - SJGS Replacement Resources | (1,714,978) | (42,258) |
| 94 | Regulatory Assets - SJGS Undepreciated Investment | - | - |
| 95 | Regulatory Assets - SJGS Underground Coal Mine | - | - |
| 96 | Regulatory Assets - Solar Direct Regulatory Assets | - | - |
| 97 | Regulatory Assets - TOD Rate Pilot Program | (627,838) | (78,480) |
| 98 | Regulatory Assets - Transportation Electrification | - | - |

| | A | CR | CS |
|---|---|---|---|
| 1 | **Public Service Company of New Mexico** | | |
| 2 | **Schedule H-12** | | |
| 3 | **Accumulated Tax Deferrals** | | |
| 4 | **Base Period Ending 6/30/2026** | | |
| 5 | **Test Period Ending 9/30/2028** | | |
| 6 | **This schedule is sponsored by PNM Witness Morris** | | |
| 7 | | | |
| 8 | | | |
| 9 | | **30-Sep-28** | **Test Period** |
| 10 | | **Balance** | **Adjustments** |
| 99 | Regulatory Assets - WCC Transaction Costs | - | - |
| 100 | Regulatory Liabilities - Energy Efficiency | - | - |
| 101 | Regulatory Liabilities - FAC | - | - |
| 102 | Regulatory Assets - PCB Refinancing Hedge | (1,231,385) | (107,245) |
| 103 | Prepaid Expenses: Production | (445,840) | - |
| 104 | Prepaid Expenses: Transmission | (1,849,743) | - |
| 105 | Prepaid Expenses: Transmission (incremental FERC Rates) | - | - |
| 106 | Prepaid Expenses: Distribution | (135,016) | - |
| 107 | Prepaid Expenses: Renewables | - | - |
| 108 | Regulatory Assets - 2024 Rate Change | (71,585) | (122,717) |
| 109 | Regulatory Assets - 2025 Rate Change | (179,342) | (51,241) |
| 110 | Regulatory Assets - SJGS Obsolete Inventory | (1,297,724) | (31,977) |
| 111 | Regulatory Liabilities - Earnings Test | - | - |
| 112 | Regulatory Assets - PVNGS Lease costs | - | (2,536) |
| 113 | Regulatory Assets - PVNGS Undepreciated Investment | (8,980,668) | (293,652) |
| 114 | Regulatory Assets - ETC Over/Under SPE | - | - |
| 115 | Regulatory Assets - PVNGS Replacement Resources | (402,562) | (13,163) |
| 116 | Regulatory Assets - Rate Rider 12 UG Rate | - | - |
| 117 | Regulatory Assets - Renewable Rider Curr Reg | - | - |
| 118 | Regulatory Assets - SJ Energy Transition Property (SPE) | (75,298,594) | (1,640,492) |
| 119 | Regulatory Liabilities - Curr Reg Liab-UG Rate Rider 12 | - | - |
| 120 | Regulatory Liabilities - ITC Sandia | 5,669,803 | 708,725 |
| 121 | Regulatory Liabilities - ITC Sunbelt | 19,055,375 | (13,037,888) |
| 122 | Regulatory Liabilities - ITC - Distribution Battery Phase 2 | 5,090,174 | (829,169) |
| 123 | Regulatory Liabilities - Energy Transition Cost True Up | 266,186 | 6,682 |
| 124 | Regulatory Liabilities - SJGS Retirements Rate Credit | (0) | 11,902 |
| 125 | Regulatory Liabilities - PVNGS Lease Costs | - | - |
| 126 | Deferred Debits - WS-Transmission Revenue | - | - |
| 127 | Customer Advance | - | - |
| 128 | Deferred Credits - ETA | - | - |
| 129 | Other Liabilities - ETA Coal Mine Severance | - | - |
| 130 | Other Liabilities - ETA State Agency Payments | - | - |
| 131 | SJGS County Ordinance Decommission | - | - |
| 132 | | | |
| 133 | **Total Accumulated Deferred Income Taxes** | (852,500,778) | 11,874,446 |
| 134 | | | |
| 135 | General Ledger ADIT Balance | | |
| 136 | | | |
| 137 | Difference (Rounding) | | |

| | A | CT | CU |
|---|---|---|---|
| 1 | **Public Service Company of New Mexico** | | |
| 2 | **Schedule H-12** | | |
| 3 | **Accumulated Tax Deferrals** | | |
| 4 | **Base Period Ending 6/30/2026** | | |
| 5 | **Test Period Ending 9/30/2028** | | |
| 6 | **This schedule is sponsored by PNM Witness Morris** | | |
| 7 | | | |
| 8 | | | **Adjusted Base** |
| 9 | | **Adjusted Test** | **To Test Period** |
| 10 | | **Period** | **Variance** |
| 11 | **Accumulated Deferred Income Taxes** | | |
| 12 | Federal Tax Credit Carryforward | 21,743,653 | - |
| 13 | Federal Tax Credit Carryforward - Renewables | - | - |
| 14 | Net Operating Loss (NOL) | 53,415,338 | - |
| 15 | Incentive Pay Plans | - | - |
| 16 | Regulatory Assets - Coal Mine Decommissioning | - | - |
| 17 | Regulatory Liabilities - Renewable Rider | - | - |
| 18 | Income Tax Regulatory Liability | 87,464,984 | 37,346,721 |
| 19 | Income Tax Regulatory Asset | (65,518,006) | - |
| 20 | Investment Tax Credit 2024 | 7,393,757 | - |
| 21 | Investment Tax Credit - Sandia | - | - |
| 22 | Investment Tax Credit - Sunbelt | 6,982,285 | 6,982,285 |
| 23 | Investment Tax Credit - Distribution Battery Phase 2 | 2,084,574 | 2,084,574 |
| 24 | Lease Liability | - | - |
| 25 | Deferred Credits - Coal Mine Decommissioning | - | - |
| 26 | Regulatory Assets - ETA Carrying Charges | - | - |
| 27 | Regulatory Assets - ETA Job Training & Severance | - | - |
| 28 | Regulatory Assets - ETA Payments to State Agencies | - | - |
| 29 | Regulatory Assets - ETA SJGS Plant Decommissioning | - | - |
| 30 | Regulatory Assets - ETA SJGS upfront Financing Cost | - | - |
| 31 | Regulatory Assets - ETA Westmoreland Coal Mine Sev | - | - |
| 32 | Deferred Credits - Joint Use | 85,181 | (74,534) |
| 33 | Deferred Credits - Pathnet | 1,360,724 | (37,824) |
| 34 | Deferred Credits - PVNGS Dry Casks | - | - |
| 35 | Other Deferred Credits | - | - |
| 36 | Other Liabilities - ETA Job Training and Severance | - | - |
| 37 | Other Liabilities - Navajo Workforce Training | - | - |
| 38 | Other Liabilities | - | - |
| 39 | Blackstone Transaction Costs | - | - |
| 40 | Injury and Damages | 2,058,181 | - |
| 41 | Plant - AFUDC | (46,283,078) | (7,088,257) |
| 42 | Plant - Capitalized Interest | 17,607,447 | - |
| 43 | Decommissioning and Reclamation Trusts | - | - |
| 44 | ASC 740-10 (FIN 48) Reclassifications | - | - |
| 45 | Estimated Tax Rate Adjustment | - | - |
| 46 | PVNGS Licensing | 0 | (16,871) |
| 47 | Plant - 263A Adjustment | (80,078,392) | - |
| 48 | Deferred State Taxes | - | - |
| 49 | Plant - CIAC | 26,503,887 | - |
| 50 | Plant - Depreciation Nuclear Fuel | 9,375,187 | 812,605 |
| 51 | Plant - Removal Cost | (4,446,299) | - |
| 52 | Plant - Repairs | (208,775,007) | (54,207,700) |
| 53 | Plant - Section 174 Deduction | 7,509,732 | - |
| 54 | Plant - Asset Retirement Obligation | 10,564,781 | 982,732 |

| | A | CT | CU |
|---|---|---|---|
| 1 | **Public Service Company of New Mexico** | | |
| 2 | **Schedule H-12** | | |
| 3 | **Accumulated Tax Deferrals** | | |
| 4 | **Base Period Ending 6/30/2026** | | |
| 5 | **Test Period Ending 9/30/2028** | | |
| 6 | **This schedule is sponsored by PNM Witness Morris** | | |
| 7 | | | |
| 8 | | | **Adjusted Base** |
| 9 | | **Adjusted Test** | **To Test Period** |
| 10 | | **Period** | **Variance** |
| 55 | Plant - Pollution Control Property | (2,154,701) | - |
| 56 | Plant - Liberalized Depreciation: Production | (146,363,439) | 14,416,820 |
| 57 | Plant - Liberalized Depreciation: Transmission | (148,057,985) | 1,991,490 |
| 58 | Plant - Liberalized Depreciation: Distribution | (177,860,657) | (22,053,297) |
| 59 | Plant - Liberalized Depreciation: General and Intangible | (9,954,239) | 11,131,051 |
| 60 | Plant - Liberalized Depreciation: Grid Mod | (17,735,275) | (15,732,392) |
| 61 | Plant - Liberalized Depreciation: Renewables | (46,138,261) | 3,229,261 |
| 62 | Plant - Four Corners Imprudence | - | - |
| 63 | Regulatory Assets - SJGS Stranded Costs Units 2&3 | (15,677,710) | 2,790,098 |
| 64 | Pension | (37,247,731) | 694,923 |
| 65 | Retiree Medical | - | - |
| 66 | Lease Asset | - | - |
| 67 | Loss on Reacquired Debt | (817,847) | 173,506 |
| 68 | Other Comprehensive Income (OCI) | - | - |
| 69 | Deferred Credits - SO2 Allowance | - | - |
| 70 | Deferred Debits - Rate Case Expense | (945,718) | (945,718) |
| 71 | Deferred Debits - Decoupling | - | - |
| 72 | Deferred Debits - Grid Modernization | - | - |
| 73 | Deferred Debits - RR Underground Rider | - | - |
| 74 | Energy Storage Agreement | (7,593,870) | (9,477,482) |
| 75 | Energy Transition Charges | - | - |
| 76 | Prepaid Expenses | (1,168,330) | - |
| 77 | Regulatory Assets - 2024 COVID Bad Debt | - | - |
| 78 | Regulatory Assets - COVID-19 Costs | (90,166) | 304,542 |
| 79 | Regulatory Assets - Community Solar | (824,022) | 78,734 |
| 80 | Regulatory assets - FAC | 0 | - |
| 81 | Regulatory Assets - EDAM Costs | (708,283) | (518,349) |
| 82 | Regulatory Assets - EIM Costs | (755,699) | 1,670,493 |
| 83 | Regulatory Assets - Energy Efficiency | (116,146) | 12,905 |
| 84 | Regulatory Assets - ETA | - | - |
| 85 | Regulatory Assets - FERC 893 Cyber | - | - |
| 86 | Regulatory Assets - IRP | (40,935) | 4,548 |
| 87 | Regulatory Assets - Sky Blue Under Recovery | - | - |
| 88 | Regulatory Assets - Renewable Energy | 2,436,053 | (509,603) |
| 89 | Regulatory Assets - Renewable Energy Credits | (78,530) | - |
| 90 | Regulatory Assets - SJGS External Legal Fees | (104,531) | 8,798 |
| 91 | Regulatory Assets - SJGS Final ETA Depcom | - | - |
| 92 | Regulatory Assets - SJGS Final ETA Mine Rec | - | - |
| 93 | Regulatory Assets - SJGS Replacement Resources | (1,757,236) | 147,904 |
| 94 | Regulatory Assets - SJGS Undepreciated Investment | - | - |
| 95 | Regulatory Assets - SJGS Underground Coal Mine | - | - |
| 96 | Regulatory Assets - Solar Direct Regulatory Assets | - | - |
| 97 | Regulatory Assets - TOD Rate Pilot Program | (706,318) | 78,480 |
| 98 | Regulatory Assets - Transportation Electrification | - | - |

| | A | CT | CU |
|---|---|---|---|
| 1 | **Public Service Company of New Mexico** | | |
| 2 | **Schedule H-12** | | |
| 3 | **Accumulated Tax Deferrals** | | |
| 4 | **Base Period Ending 6/30/2026** | | |
| 5 | **Test Period Ending 9/30/2028** | | |
| 6 | **This schedule is sponsored by PNM Witness Morris** | | |
| 7 | | | |
| 8 | | | **Adjusted Base** |
| 9 | | **Adjusted Test** | **To Test Period** |
| 10 | | **Period** | **Variance** |
| 99 | Regulatory Assets - WCC Transaction Costs | - | - |
| 100 | Regulatory Liabilities - Energy Efficiency | - | - |
| 101 | Regulatory Liabilities - FAC | - | - |
| 102 | Regulatory Assets - PCB Refinancing Hedge | (1,338,630) | 375,356 |
| 103 | Prepaid Expenses: Production | (445,840) | - |
| 104 | Prepaid Expenses: Transmission | (1,849,743) | - |
| 105 | Prepaid Expenses: Transmission (incremental FERC Rates) | - | - |
| 106 | Prepaid Expenses: Distribution | (135,016) | - |
| 107 | Prepaid Expenses: Renewables | - | - |
| 108 | Regulatory Assets - 2024 Rate Change | (194,302) | 429,509 |
| 109 | Regulatory Assets - 2025 Rate Change | (230,583) | 179,342 |
| 110 | Regulatory Assets - SJGS Obsolete Inventory | (1,329,701) | 111,919 |
| 111 | Regulatory Liabilities - Earnings Test | - | - |
| 112 | Regulatory Assets - PVNGS Lease costs | (2,536) | 2,536 |
| 113 | Regulatory Assets - PVNGS Undepreciated Investment | (9,274,319) | 1,027,780 |
| 114 | Regulatory Assets - ETC Over/Under SPE | - | - |
| 115 | Regulatory Assets - PVNGS Replacement Resources | (415,725) | 46,070 |
| 116 | Regulatory Assets - Rate Rider 12 UG Rate | - | - |
| 117 | Regulatory Assets - Renewable Rider Curr Reg | - | - |
| 118 | Regulatory Assets - SJ Energy Transition Property (SPE) | (76,939,086) | 5,741,723 |
| 119 | Regulatory Liabilities - Curr Reg Liab-UG Rate Rider 12 | - | - |
| 120 | Regulatory Liabilities - ITC Sandia | 6,378,528 | 6,378,528 |
| 121 | Regulatory Liabilities - ITC Sunbelt | 6,017,487 | 6,017,487 |
| 122 | Regulatory Liabilities - ITC - Distribution Battery Phase 2 | 4,261,006 | 4,261,006 |
| 123 | Regulatory Liabilities - Energy Transition Cost True Up | 272,869 | (23,389) |
| 124 | Regulatory Liabilities - SJGS Retirements Rate Credit | 11,902 | (11,902) |
| 125 | Regulatory Liabilities - PVNGS Lease Costs | - | - |
| 126 | Deferred Debits - WS-Transmission Revenue | - | - |
| 127 | Customer Advance | - | - |
| 128 | Deferred Credits - ETA | - | - |
| 129 | Other Liabilities - ETA Coal Mine Severance | - | - |
| 130 | Other Liabilities - ETA State Agency Payments | - | - |
| 131 | SJGS County Ordinance Decommission | - | - |
| 132 | | | |
| 133 | **Total Accumulated Deferred Income Taxes** | (840,626,333) | (1,183,592) |
| 134 | | | |
| 135 | General Ledger ADIT Balance | | |
| 136 | | | |
| 137 | Difference (Rounding) | | |

| | A | CV | CW |
|---|---|---|---|
| 1 | **Public Service Company of New Mexico** | | |
| 2 | **Schedule H-12** | | |
| 3 | **Accumulated Tax Deferrals** | | |
| 4 | **Base Period Ending 6/30/2026** | | |
| 5 | **Test Period Ending 9/30/2028** | | |
| 6 | **This schedule is sponsored by PNM Witness Morris** | | |
| 7 | | | |
| 8 | | | |
| 9 | | **Variance** | **Refer to** |
| 10 | | **Percentage** | **Notes** |
| 11 | **Accumulated Deferred Income Taxes** | | |
| 12 | Federal Tax Credit Carryforward | 0.00% | |
| 13 | Federal Tax Credit Carryforward - Renewables | 0.00% | |
| 14 | Net Operating Loss (NOL) | 0.00% | |
| 15 | Incentive Pay Plans | 0.00% | |
| 16 | Regulatory Assets - Coal Mine Decommissioning | 0.00% | |
| 17 | Regulatory Liabilities - Renewable Rider | 0.00% | |
| 18 | Income Tax Regulatory Liability | 74.52% | 1 |
| 19 | Income Tax Regulatory Asset | 0.00% | |
| 20 | Investment Tax Credit 2024 | 0.00% | |
| 21 | Investment Tax Credit - Sandia | 0.00% | |
| 22 | Investment Tax Credit - Sunbelt | 0.00% | |
| 23 | Investment Tax Credit - Distribution Battery Phase 2 | 0.00% | |
| 24 | Lease Liability | 0.00% | |
| 25 | Deferred Credits - Coal Mine Decommissioning | 0.00% | |
| 26 | Regulatory Assets - ETA Carrying Charges | 0.00% | |
| 27 | Regulatory Assets - ETA Job Training & Severance | 0.00% | |
| 28 | Regulatory Assets - ETA Payments to State Agencies | 0.00% | |
| 29 | Regulatory Assets - ETA SJGS Plant Decommissioning | 0.00% | |
| 30 | Regulatory Assets - ETA SJGS upfront Financing Cost | 0.00% | |
| 31 | Regulatory Assets - ETA Westmoreland Coal Mine Sev | 0.00% | |
| 32 | Deferred Credits - Joint Use | -46.67% | 2 |
| 33 | Deferred Credits - Pathnet | -2.70% | |
| 34 | Deferred Credits - PVNGS Dry Casks | 0.00% | |
| 35 | Other Deferred Credits | 0.00% | |
| 36 | Other Liabilities - ETA Job Training and Severance | 0.00% | |
| 37 | Other Liabilities - Navajo Workforce Training | 0.00% | |
| 38 | Other Liabilities | 0.00% | |
| 39 | Blackstone Transaction Costs | 0.00% | |
| 40 | Injury and Damages | 0.00% | |
| 41 | Plant - AFUDC | 18.08% | 3 |
| 42 | Plant - Capitalized Interest | 0.00% | |
| 43 | Decommissioning and Reclamation Trusts | 0.00% | |
| 44 | ASC 740-10 (FIN 48) Reclassifications | 0.00% | |
| 45 | Estimated Tax Rate Adjustment | 0.00% | |
| 46 | PVNGS Licensing | -100.00% | 4 |
| 47 | Plant - 263A Adjustment | 0.00% | |
| 48 | Deferred State Taxes | 0.00% | |
| 49 | Plant - CIAC | 0.00% | |
| 50 | Plant - Depreciation Nuclear Fuel | 9.49% | |
| 51 | Plant - Removal Cost | 0.00% | |
| 52 | Plant - Repairs | 35.07% | 5 |
| 53 | Plant - Section 174 Deduction | 0.00% | |
| 54 | Plant - Asset Retirement Obligation | 10.26% | 6 |

| | A | CV | CW |
|---|---|---|---|
| 1 | **Public Service Company of New Mexico** | | |
| 2 | **Schedule H-12** | | |
| 3 | **Accumulated Tax Deferrals** | | |
| 4 | **Base Period Ending 6/30/2026** | | |
| 5 | **Test Period Ending 9/30/2028** | | |
| 6 | **This schedule is sponsored by PNM Witness Morris** | | |
| 7 | | | |
| 8 | | | |
| 9 | | **Variance** | **Refer to** |
| 10 | | **Percentage** | **Notes** |
| 55 | Plant - Pollution Control Property | 0.00% | |
| 56 | Plant - Liberalized Depreciation: Production | -8.97% | |
| 57 | Plant - Liberalized Depreciation: Transmission | -1.33% | |
| 58 | Plant - Liberalized Depreciation: Distribution | 14.15% | 7 |
| 59 | Plant - Liberalized Depreciation: General and Intangible | -52.79% | 8 |
| 60 | Plant - Liberalized Depreciation: Grid Mod | 785.49% | 9 |
| 61 | Plant - Liberalized Depreciation: Renewables | -6.54% | |
| 62 | Plant - Four Corners Imprudence | 0.00% | |
| 63 | Regulatory Assets - SJGS Stranded Costs Units 2&3 | -15.11% | 10 |
| 64 | Pension | -1.83% | |
| 65 | Retiree Medical | 0.00% | |
| 66 | Lease Asset | 0.00% | |
| 67 | Loss on Reacquired Debt | -17.50% | 11 |
| 68 | Other Comprehensive Income (OCI) | 0.00% | |
| 69 | Deferred Credits - SO2 Allowance | 0.00% | |
| 70 | Deferred Debits - Rate Case Expense | 0.00% | |
| 71 | Deferred Debits - Decoupling | 0.00% | |
| 72 | Deferred Debits - Grid Modernization | 0.00% | |
| 73 | Deferred Debits - RR Underground Rider | 0.00% | |
| 74 | Energy Storage Agreement | -503.15% | 12 |
| 75 | Energy Transition Charges | 0.00% | |
| 76 | Prepaid Expenses | 0.00% | |
| 77 | Regulatory Assets - 2024 COVID Bad Debt | 0.00% | |
| 78 | Regulatory Assets - COVID-19 Costs | -77.16% | 13 |
| 79 | Regulatory Assets - Community Solar | -8.72% | |
| 80 | Regulatory assets - FAC | 0.00% | |
| 81 | Regulatory Assets - EDAM Costs | 272.91% | 14 |
| 82 | Regulatory Assets - EIM Costs | -68.85% | 15 |
| 83 | Regulatory Assets - Energy Efficiency | -10.00% | |
| 84 | Regulatory Assets - ETA | 0.00% | |
| 85 | Regulatory Assets - FERC 893 Cyber | 0.00% | |
| 86 | Regulatory Assets - IRP | -10.00% | |
| 87 | Regulatory Assets - Sky Blue Under Recovery | 0.00% | |
| 88 | Regulatory Assets - Renewable Energy | -17.30% | 16 |
| 89 | Regulatory Assets - Renewable Energy Credits | 0.00% | |
| 90 | Regulatory Assets - SJGS External Legal Fees | -7.76% | |
| 91 | Regulatory Assets - SJGS Final ETA Depcom | 0.00% | |
| 92 | Regulatory Assets - SJGS Final ETA Mine Rec | 0.00% | |
| 93 | Regulatory Assets - SJGS Replacement Resources | -7.76% | |
| 94 | Regulatory Assets - SJGS Undepreciated Investment | 0.00% | |
| 95 | Regulatory Assets - SJGS Underground Coal Mine | 0.00% | |
| 96 | Regulatory Assets - Solar Direct Regulatory Assets | 0.00% | |
| 97 | Regulatory Assets - TOD Rate Pilot Program | -10.00% | |
| 98 | Regulatory Assets - Transportation Electrification | 0.00% | |

| | A | CV | CW |
|---|---|---|---|
| 1 | **Public Service Company of New Mexico** | | |
| 2 | **Schedule H-12** | | |
| 3 | **Accumulated Tax Deferrals** | | |
| 4 | **Base Period Ending 6/30/2026** | | |
| 5 | **Test Period Ending 9/30/2028** | | |
| 6 | **This schedule is sponsored by PNM Witness Morris** | | |
| 7 | | | |
| 8 | | | |
| 9 | | **Variance** | **Refer to** |
| 10 | | **Percentage** | **Notes** |
| 99 | Regulatory Assets - WCC Transaction Costs | 0.00% | |
| 100 | Regulatory Liabilities - Energy Efficiency | 0.00% | |
| 101 | Regulatory Liabilities - FAC | 0.00% | |
| 102 | Regulatory Assets - PCB Refinancing Hedge | -21.90% | 17 |
| 103 | Prepaid Expenses: Production | 0.00% | |
| 104 | Prepaid Expenses: Transmission | 0.00% | |
| 105 | Prepaid Expenses: Transmission (incremental FERC Rates) | 0.00% | |
| 106 | Prepaid Expenses: Distribution | 0.00% | |
| 107 | Prepaid Expenses: Renewables | 0.00% | |
| 108 | Regulatory Assets - 2024 Rate Change | -68.85% | 18 |
| 109 | Regulatory Assets - 2025 Rate Change | -43.75% | 19 |
| 110 | Regulatory Assets - SJGS Obsolete Inventory | -7.76% | |
| 111 | Regulatory Liabilities - Earnings Test | 0.00% | |
| 112 | Regulatory Assets - PVNGS Lease costs | -50.00% | 20 |
| 113 | Regulatory Assets - PVNGS Undepreciated Investment | -9.98% | |
| 114 | Regulatory Assets - ETC Over/Under SPE | 0.00% | |
| 115 | Regulatory Assets - PVNGS Replacement Resources | -9.98% | |
| 116 | Regulatory Assets - Rate Rider 12 UG Rate | 0.00% | |
| 117 | Regulatory Assets - Renewable Rider Curr Reg | 0.00% | |
| 118 | Regulatory Assets - SJ Energy Transition Property (SPE) | -6.94% | |
| 119 | Regulatory Liabilities - Curr Reg Liab-UG Rate Rider 12 | 0.00% | |
| 120 | Regulatory Liabilities - ITC Sandia | 0.00% | |
| 121 | Regulatory Liabilities - ITC Sunbelt | 0.00% | |
| 122 | Regulatory Liabilities - ITC - Distribution Battery Phase 2 | 0.00% | |
| 123 | Regulatory Liabilities - Energy Transition Cost True Up | -7.89% | |
| 124 | Regulatory Liabilities - SJGS Retirements Rate Credit | -50.00% | 21 |
| 125 | Regulatory Liabilities - PVNGS Lease Costs | 0.00% | |
| 126 | Deferred Debits - WS-Transmission Revenue | 0.00% | |
| 127 | Customer Advance | 0.00% | |
| 128 | Deferred Credits - ETA | 0.00% | |
| 129 | Other Liabilities - ETA Coal Mine Severance | 0.00% | |
| 130 | Other Liabilities - ETA State Agency Payments | 0.00% | |
| 131 | SJGS County Ordinance Decommission | 0.00% | |
| 132 | | | |
| 133 | **Total Accumulated Deferred Income Taxes** | | |
| 134 | | | |
| 135 | General Ledger ADIT Balance | | |
| 136 | | | |
| 137 | Difference (Rounding) | | |

| | A | CX |
|---|---|---|
| 1 | **Public Service Company of New Mexico** | |
| 2 | **Schedule H-12** | |
| 3 | **Accumulated Tax Deferrals** | |
| 4 | **Base Period Ending 6/30/2026** | |
| 5 | **Test Period Ending 9/30/2028** | |
| 6 | **This schedule is sponsored by PNM Witness Morris** | |
| 7 | | |
| 8 | | |
| 9 | | |
| 10 | | **Reference** |
| 11 | **Accumulated Deferred Income Taxes** | |
| 12 | Federal Tax Credit Carryforward | PNM Exhibit RNG-3 COS Test, Line |
| 13 | Federal Tax Credit Carryforward - Renewables | |
| 14 | Net Operating Loss (NOL) | PNM Exhibit RNG-3 COS Test, Line |
| 15 | Incentive Pay Plans | |
| 16 | Regulatory Assets - Coal Mine Decommissioning | |
| 17 | Regulatory Liabilities - Renewable Rider | |
| 18 | Income Tax Regulatory Liability | PNM Exhibit RNG-3 COS Test, Line |
| 19 | Income Tax Regulatory Asset | PNM Exhibit RNG-3 COS Test, Line |
| 20 | Investment Tax Credit 2024 | PNM Exhibit RNG-3 COS Test, Line |
| 21 | Investment Tax Credit - Sandia | |
| 22 | Investment Tax Credit - Sunbelt | PNM Exhibit RNG-3 COS Test, Line |
| 23 | Investment Tax Credit - Distribution Battery Phase 2 | PNM Exhibit RNG-3 COS Test, Line |
| 24 | Lease Liability | |
| 25 | Deferred Credits - Coal Mine Decommissioning | |
| 26 | Regulatory Assets - ETA Carrying Charges | |
| 27 | Regulatory Assets - ETA Job Training & Severance | |
| 28 | Regulatory Assets - ETA Payments to State Agencies | |
| 29 | Regulatory Assets - ETA SJGS Plant Decommissioning | |
| 30 | Regulatory Assets - ETA SJGS upfront Financing Cost | |
| 31 | Regulatory Assets - ETA Westmoreland Coal Mine Sev | |
| 32 | Deferred Credits - Joint Use | PNM Exhibit RNG-3 COS Test, Line |
| 33 | Deferred Credits - Pathnet | PNM Exhibit RNG-3 COS Test, Line |
| 34 | Deferred Credits - PVNGS Dry Casks | |
| 35 | Other Deferred Credits | |
| 36 | Other Liabilities - ETA Job Training and Severance | |
| 37 | Other Liabilities - Navajo Workforce Training | |
| 38 | Other Liabilities | |
| 39 | Blackstone Transaction Costs | |
| 40 | Injury and Damages | PNM Exhibit RNG-3 COS Test, Line |
| 41 | Plant - AFUDC | PNM Exhibit RNG-3 COS Test, Line |
| 42 | Plant - Capitalized Interest | PNM Exhibit RNG-3 COS Test, Line |
| 43 | Decommissioning and Reclamation Trusts | |
| 44 | ASC 740-10 (FIN 48) Reclassifications | |
| 45 | Estimated Tax Rate Adjustment | |
| 46 | PVNGS Licensing | PNM Exhibit RNG-3 COS Test, Line |
| 47 | Plant - 263A Adjustment | PNM Exhibit RNG-3 COS Test, Line |
| 48 | Deferred State Taxes | |
| 49 | Plant - CIAC | PNM Exhibit RNG-3 COS Test, Line |
| 50 | Plant - Depreciation Nuclear Fuel | PNM Exhibit RNG-3 COS Test, Line |
| 51 | Plant - Removal Cost | PNM Exhibit RNG-3 COS Test, Line |
| 52 | Plant - Repairs | PNM Exhibit RNG-3 COS Test, Line |
| 53 | Plant - Section 174 Deduction | PNM Exhibit RNG-3 COS Test, Line |
| 54 | Plant - Asset Retirement Obligation | PNM Exhibit RNG-3 COS Test, Line |

| | A | CX |
|---|---|---|
| 1 | **Public Service Company of New Mexico** | |
| 2 | **Schedule H-12** | |
| 3 | **Accumulated Tax Deferrals** | |
| 4 | **Base Period Ending 6/30/2026** | |
| 5 | **Test Period Ending 9/30/2028** | |
| 6 | **This schedule is sponsored by PNM Witness Morris** | |
| 7 | | |
| 8 | | |
| 9 | | |
| 10 | | **Reference** |
| 55 | Plant - Pollution Control Property | PNM Exhibit RNG-3 COS Test, Line |
| 56 | Plant - Liberalized Depreciation: Production | PNM Exhibit RNG-3 COS Test, Line |
| 57 | Plant - Liberalized Depreciation: Transmission | PNM Exhibit RNG-3 COS Test, Line |
| 58 | Plant - Liberalized Depreciation: Distribution | PNM Exhibit RNG-3 COS Test, Line |
| 59 | Plant - Liberalized Depreciation: General and Intangible | PNM Exhibit RNG-3 COS Test, Line |
| 60 | Plant - Liberalized Depreciation: Grid Mod | PNM Exhibit RNG-3 COS Test, Line |
| 61 | Plant - Liberalized Depreciation: Renewables | PNM Exhibit RNG-3 COS Test, Line |
| 62 | Plant - Four Corners Imprudence | |
| 63 | Regulatory Assets - SJGS Stranded Costs Units 2&3 | PNM Exhibit RNG-3 COS Test, Line |
| 64 | Pension | PNM Exhibit RNG-3 COS Test, Line |
| 65 | Retiree Medical | |
| 66 | Lease Asset | |
| 67 | Loss on Reacquired Debt | PNM Exhibit RNG-3 COS Test, Line |
| 68 | Other Comprehensive Income (OCI) | |
| 69 | Deferred Credits - SO2 Allowance | |
| 70 | Deferred Debits - Rate Case Expense | PNM Exhibit RNG-3 COS Test, Line |
| 71 | Deferred Debits - Decoupling | |
| 72 | Deferred Debits - Grid Modernization | |
| 73 | Deferred Debits - RR Underground Rider | |
| 74 | Energy Storage Agreement | PNM Exhibit RNG-3 COS Test, Line |
| 75 | Energy Transition Charges | |
| 76 | Prepaid Expenses | PNM Exhibit RNG-3 COS Test, Line |
| 77 | Regulatory Assets - 2024 COVID Bad Debt | |
| 78 | Regulatory Assets - COVID-19 Costs | PNM Exhibit RNG-3 COS Test, Line |
| 79 | Regulatory Assets - Community Solar | PNM Exhibit RNG-3 COS Test, Line |
| 80 | Regulatory assets - FAC | PNM Exhibit RNG-3 COS Test, Line |
| 81 | Regulatory Assets - EDAM Costs | PNM Exhibit RNG-3 COS Test, Line |
| 82 | Regulatory Assets - EIM Costs | PNM Exhibit RNG-3 COS Test, Line |
| 83 | Regulatory Assets - Energy Efficiency | PNM Exhibit RNG-3 COS Test, Line |
| 84 | Regulatory Assets - ETA | |
| 85 | Regulatory Assets - FERC 893 Cyber | |
| 86 | Regulatory Assets - IRP | PNM Exhibit RNG-3 COS Test, Line |
| 87 | Regulatory Assets - Sky Blue Under Recovery | |
| 88 | Regulatory Assets - Renewable Energy | PNM Exhibit RNG-3 COS Test, Line |
| 89 | Regulatory Assets - Renewable Energy Credits | PNM Exhibit RNG-3 COS Test, Line |
| 90 | Regulatory Assets - SJGS External Legal Fees | PNM Exhibit RNG-3 COS Test, Line |
| 91 | Regulatory Assets - SJGS Final ETA Depcom | |
| 92 | Regulatory Assets - SJGS Final ETA Mine Rec | |
| 93 | Regulatory Assets - SJGS Replacement Resources | PNM Exhibit RNG-3 COS Test, Line |
| 94 | Regulatory Assets - SJGS Undepreciated Investment | |
| 95 | Regulatory Assets - SJGS Underground Coal Mine | |
| 96 | Regulatory Assets - Solar Direct Regulatory Assets | |
| 97 | Regulatory Assets - TOD Rate Pilot Program | PNM Exhibit RNG-3 COS Test, Line |
| 98 | Regulatory Assets - Transportation Electrification | |

| | A | CX |
|---|---|---|
| 1 | **Public Service Company of New Mexico** | |
| 2 | **Schedule H-12** | |
| 3 | **Accumulated Tax Deferrals** | |
| 4 | **Base Period Ending 6/30/2026** | |
| 5 | **Test Period Ending 9/30/2028** | |
| 6 | **This schedule is sponsored by PNM Witness Morris** | |
| 7 | | |
| 8 | | |
| 9 | | |
| 10 | | **Reference** |
| 99 | Regulatory Assets - WCC Transaction Costs | |
| 100 | Regulatory Liabilities - Energy Efficiency | |
| 101 | Regulatory Liabilities - FAC | |
| 102 | Regulatory Assets - PCB Refinancing Hedge | PNM Exhibit RNG-3 COS Test, Line |
| 103 | Prepaid Expenses: Production | PNM Exhibit RNG-3 COS Test, Line |
| 104 | Prepaid Expenses: Transmission | PNM Exhibit RNG-3 COS Test, Line |
| 105 | Prepaid Expenses: Transmission (incremental FERC Rates) | |
| 106 | Prepaid Expenses: Distribution | PNM Exhibit RNG-3 COS Test, Line |
| 107 | Prepaid Expenses: Renewables | |
| 108 | Regulatory Assets - 2024 Rate Change | PNM Exhibit RNG-3 COS Test, Line |
| 109 | Regulatory Assets - 2025 Rate Change | PNM Exhibit RNG-3 COS Test, Line |
| 110 | Regulatory Assets - SJGS Obsolete Inventory | PNM Exhibit RNG-3 COS Test, Line |
| 111 | Regulatory Liabilities - Earnings Test | |
| 112 | Regulatory Assets - PVNGS Lease costs | PNM Exhibit RNG-3 COS Test, Line |
| 113 | Regulatory Assets - PVNGS Undepreciated Investment | PNM Exhibit RNG-3 COS Test, Line |
| 114 | Regulatory Assets - ETC Over/Under SPE | |
| 115 | Regulatory Assets - PVNGS Replacement Resources | PNM Exhibit RNG-3 COS Test, Line |
| 116 | Regulatory Assets - Rate Rider 12 UG Rate | |
| 117 | Regulatory Assets - Renewable Rider Curr Reg | |
| 118 | Regulatory Assets - SJ Energy Transition Property (SPE) | PNM Exhibit RNG-3 COS Test, Line |
| 119 | Regulatory Liabilities - Curr Reg Liab-UG Rate Rider 12 | |
| 120 | Regulatory Liabilities - ITC Sandia | PNM Exhibit RNG-3 COS Test, Line |
| 121 | Regulatory Liabilities - ITC Sunbelt | PNM Exhibit RNG-3 COS Test, Line |
| 122 | Regulatory Liabilities - ITC - Distribution Battery Phase 2 | PNM Exhibit RNG-3 COS Test, Line |
| 123 | Regulatory Liabilities - Energy Transition Cost True Up | PNM Exhibit RNG-3 COS Test, Line |
| 124 | Regulatory Liabilities - SJGS Retirements Rate Credit | PNM Exhibit RNG-3 COS Test, Line |
| 125 | Regulatory Liabilities - PVNGS Lease Costs | |
| 126 | Deferred Debits - WS-Transmission Revenue | |
| 127 | Customer Advance | |
| 128 | Deferred Credits - ETA | |
| 129 | Other Liabilities - ETA Coal Mine Severance | |
| 130 | Other Liabilities - ETA State Agency Payments | |
| 131 | SJGS County Ordinance Decommission | |
| 132 | | |
| 133 | **Total Accumulated Deferred Income Taxes** | |
| 134 | | |
| 135 | General Ledger ADIT Balance | |
| 136 | | |
| 137 | Difference (Rounding) | |

| | A | CY |
|---|---|---|
| 1 | **Public Service Company of New Mexico** | |
| 2 | **Schedule H-12** | |
| 3 | **Accumulated Tax Deferrals** | |
| 4 | **Base Period Ending 6/30/2026** | |
| 5 | **Test Period Ending 9/30/2028** | |
| 6 | **This schedule is sponsored by PNM Witness Morris** | |
| 7 | | |
| 8 | | |
| 9 | | |
| 10 | | |
| 11 | **Accumulated Deferred Income Taxes** | |
| 12 | Federal Tax Credit Carryforward | 84 |
| 13 | Federal Tax Credit Carryforward - Renewables | |
| 14 | Net Operating Loss (NOL) | 85 |
| 15 | Incentive Pay Plans | |
| 16 | Regulatory Assets - Coal Mine Decommissioning | |
| 17 | Regulatory Liabilities - Renewable Rider | |
| 18 | Income Tax Regulatory Liability | 86 |
| 19 | Income Tax Regulatory Asset | 87 |
| 20 | Investment Tax Credit 2024 | 88 |
| 21 | Investment Tax Credit - Sandia | |
| 22 | Investment Tax Credit - Sunbelt | 89 |
| 23 | Investment Tax Credit - Distribution Battery Phase 2 | 90 |
| 24 | Lease Liability | |
| 25 | Deferred Credits - Coal Mine Decommissioning | |
| 26 | Regulatory Assets - ETA Carrying Charges | |
| 27 | Regulatory Assets - ETA Job Training & Severance | |
| 28 | Regulatory Assets - ETA Payments to State Agencies | |
| 29 | Regulatory Assets - ETA SJGS Plant Decommissioning | |
| 30 | Regulatory Assets - ETA SJGS upfront Financing Cost | |
| 31 | Regulatory Assets - ETA Westmoreland Coal Mine Sev | |
| 32 | Deferred Credits - Joint Use | 91 |
| 33 | Deferred Credits - Pathnet | 92 |
| 34 | Deferred Credits - PVNGS Dry Casks | |
| 35 | Other Deferred Credits | |
| 36 | Other Liabilities - ETA Job Training and Severance | |
| 37 | Other Liabilities - Navajo Workforce Training | |
| 38 | Other Liabilities | |
| 39 | Blackstone Transaction Costs | |
| 40 | Injury and Damages | 93 |
| 41 | Plant - AFUDC | 94 |
| 42 | Plant - Capitalized Interest | 95 |
| 43 | Decommissioning and Reclamation Trusts | |
| 44 | ASC 740-10 (FIN 48) Reclassifications | |
| 45 | Estimated Tax Rate Adjustment | |
| 46 | PVNGS Licensing | 96 |
| 47 | Plant - 263A Adjustment | 97 |
| 48 | Deferred State Taxes | |
| 49 | Plant - CIAC | 98 |
| 50 | Plant - Depreciation Nuclear Fuel | 99 |
| 51 | Plant - Removal Cost | 100 |
| 52 | Plant - Repairs | 101 |
| 53 | Plant - Section 174 Deduction | 102 |
| 54 | Plant - Asset Retirement Obligation | 103 |

| | A | CY |
|---|---|---|
| 1 | **Public Service Company of New Mexico** | |
| 2 | **Schedule H-12** | |
| 3 | **Accumulated Tax Deferrals** | |
| 4 | **Base Period Ending 6/30/2026** | |
| 5 | **Test Period Ending 9/30/2028** | |
| 6 | **This schedule is sponsored by PNM Witness Morris** | |
| 7 | | |
| 8 | | |
| 9 | | |
| 10 | | |
| 55 | Plant - Pollution Control Property | 104 |
| 56 | Plant - Liberalized Depreciation: Production | 105 |
| 57 | Plant - Liberalized Depreciation: Transmission | 106 |
| 58 | Plant - Liberalized Depreciation: Distribution | 107 |
| 59 | Plant - Liberalized Depreciation: General and Intangible | 108 |
| 60 | Plant - Liberalized Depreciation: Grid Mod | 109 |
| 61 | Plant - Liberalized Depreciation: Renewables | 110 |
| 62 | Plant - Four Corners Imprudence | |
| 63 | Regulatory Assets - SJGS Stranded Costs Units 2&3 | 111 |
| 64 | Pension | 112 |
| 65 | Retiree Medical | |
| 66 | Lease Asset | |
| 67 | Loss on Reacquired Debt | 113 |
| 68 | Other Comprehensive Income (OCI) | |
| 69 | Deferred Credits - SO2 Allowance | |
| 70 | Deferred Debits - Rate Case Expense | 114 |
| 71 | Deferred Debits - Decoupling | |
| 72 | Deferred Debits - Grid Modernization | |
| 73 | Deferred Debits - RR Underground Rider | |
| 74 | Energy Storage Agreement | 115 |
| 75 | Energy Transition Charges | |
| 76 | Prepaid Expenses | 116 |
| 77 | Regulatory Assets - 2024 COVID Bad Debt | |
| 78 | Regulatory Assets - COVID-19 Costs | 117 |
| 79 | Regulatory Assets - Community Solar | 118 |
| 80 | Regulatory assets - FAC | 119 |
| 81 | Regulatory Assets - EDAM Costs | 120 |
| 82 | Regulatory Assets - EIM Costs | 121 |
| 83 | Regulatory Assets - Energy Efficiency | 122 |
| 84 | Regulatory Assets - ETA | |
| 85 | Regulatory Assets - FERC 893 Cyber | |
| 86 | Regulatory Assets - IRP | 123 |
| 87 | Regulatory Assets - Sky Blue Under Recovery | |
| 88 | Regulatory Assets - Renewable Energy | 124 |
| 89 | Regulatory Assets - Renewable Energy Credits | 125 |
| 90 | Regulatory Assets - SJGS External Legal Fees | 126 |
| 91 | Regulatory Assets - SJGS Final ETA Depcom | |
| 92 | Regulatory Assets - SJGS Final ETA Mine Rec | |
| 93 | Regulatory Assets - SJGS Replacement Resources | 127 |
| 94 | Regulatory Assets - SJGS Undepreciated Investment | |
| 95 | Regulatory Assets - SJGS Underground Coal Mine | |
| 96 | Regulatory Assets - Solar Direct Regulatory Assets | |
| 97 | Regulatory Assets - TOD Rate Pilot Program | 128 |
| 98 | Regulatory Assets - Transportation Electrification | |

| | A | CY |
|---|---|---|
| 1 | **Public Service Company of New Mexico** | |
| 2 | **Schedule H-12** | |
| 3 | **Accumulated Tax Deferrals** | |
| 4 | **Base Period Ending 6/30/2026** | |
| 5 | **Test Period Ending 9/30/2028** | |
| 6 | **This schedule is sponsored by PNM Witness Morris** | |
| 7 | | |
| 8 | | |
| 9 | | |
| 10 | | |
| 99 | Regulatory Assets - WCC Transaction Costs | |
| 100 | Regulatory Liabilities - Energy Efficiency | |
| 101 | Regulatory Liabilities - FAC | |
| 102 | Regulatory Assets - PCB Refinancing Hedge | 129 |
| 103 | Prepaid Expenses: Production | 130 |
| 104 | Prepaid Expenses: Transmission | 131 |
| 105 | Prepaid Expenses: Transmission (incremental FERC Rates) | |
| 106 | Prepaid Expenses: Distribution | 132 |
| 107 | Prepaid Expenses: Renewables | |
| 108 | Regulatory Assets - 2024 Rate Change | 133 |
| 109 | Regulatory Assets - 2025 Rate Change | 134 |
| 110 | Regulatory Assets - SJGS Obsolete Inventory | 135 |
| 111 | Regulatory Liabilities - Earnings Test | |
| 112 | Regulatory Assets - PVNGS Lease costs | 136 |
| 113 | Regulatory Assets - PVNGS Undepreciated Investment | 137 |
| 114 | Regulatory Assets - ETC Over/Under SPE | |
| 115 | Regulatory Assets - PVNGS Replacement Resources | 138 |
| 116 | Regulatory Assets - Rate Rider 12 UG Rate | |
| 117 | Regulatory Assets - Renewable Rider Curr Reg | |
| 118 | Regulatory Assets - SJ Energy Transition Property (SPE) | 139 |
| 119 | Regulatory Liabilities - Curr Reg Liab-UG Rate Rider 12 | |
| 120 | Regulatory Liabilities - ITC Sandia | 140 |
| 121 | Regulatory Liabilities - ITC Sunbelt | 141 |
| 122 | Regulatory Liabilities - ITC - Distribution Battery Phase 2 | 142 |
| 123 | Regulatory Liabilities - Energy Transition Cost True Up | 143 |
| 124 | Regulatory Liabilities - SJGS Retirements Rate Credit | 144 |
| 125 | Regulatory Liabilities - PVNGS Lease Costs | |
| 126 | Deferred Debits - WS-Transmission Revenue | |
| 127 | Customer Advance | |
| 128 | Deferred Credits - ETA | |
| 129 | Other Liabilities - ETA Coal Mine Severance | |
| 130 | Other Liabilities - ETA State Agency Payments | |
| 131 | SJGS County Ordinance Decommission | |
| 132 | | |
| 133 | **Total Accumulated Deferred Income Taxes** | |
| 134 | | |
| 135 | General Ledger ADIT Balance | |
| 136 | | |
| 137 | Difference (Rounding) | |

| | A |
|---|---|
| 1 | **Public Service Company of New Mexico** |
| 2 | **Schedule H-12** |
| 3 | **Accumulated Tax Deferrals (Notes)** |
| 4 | **Base Period Ending 6/30/2026** |
| 5 | **Test Period Ending 9/30/2028** |
| 6 | **This schedule is sponsored by PNM Witness Morris** |
| 7 | |
| 8 | Base period data is historical information from the Company's Book Balance Amounts |
| 9 | Note 1 - Variance due to projected reversal of excess ADIT in the Linkage and Test Periods |
| 10 | Note 2 - Variance due to projected joint use activity in the Linkage and test Periods |
| 11 | Note 3 - Variance due to projected AFUDC in the Linkage and Test Periods |
| 12 | Note 4 - Variance due to projected full amortization in the Linkage and Test Periods |
| 13 | Note 5 - Variance due to projected Plant Repairs in the Linkage and Test Periods |
| 14 | Note 6 - Variance due to projected Plant Asset Retirement Obligation activity in the Linkage and Test Periods |
| 15 | Note 7 - Variance due to projected depreciation in the Linkage and Test Periods |
| 16 | Note 8 - Variance due to projected depreciation in the Linkage and Test Periods |
| 17 | Note 9 - Variance due to projected depreciation in the Linkage and Test Periods |
| 18 | Note 10 - Variance due to projected regulatory asset amortization in the Linkage and Test Periods |
| 19 | Note 11 - Variance due to projected Loss on Reaquired Debt activity in the Linkage and Test Periods |
| 20 | Note 12 - Variance due to projected Energy Storage Agreement activity in the Linkage and Test Periods |
| 21 | Note 13 - Variance due to projected regulatory asset amortization in the Linkage and Test Periods |
| 22 | Note 14 - Variance due to projected regulatory asset amortization in the Linkage and Test Periods |
| 23 | Note 15 - Variance due to projected regulatory asset amortization in the Linkage and Test Periods |
| 24 | Note 16 - Variance due to projected regulatory asset amortization in the Linkage and Test Periods |
| 25 | Note 17 - Variance due to projected regulatory asset amortization in the Linkage and Test Periods |
| 26 | Note 18 - Variance due to projected regulatory asset amortization in the Linkage and Test Periods |
| 27 | Note 19 - Variance due to projected regulatory asset amortization in the Linkage and Test Periods |
| 28 | Note 20 - Variance due to projected amortization activity in the Linkage and Test Periods |
| 29 | Note 21 - Variance due to projected amortization activity in the Linkage and Test Periods |

# PNM Schedule H-13

Investment tax credits

| | A | B | C | D | E | F |
|---|---|---|---|---|---|---|
| 1 | **Public Service Company of New Mexico** | | | | | |
| 2 | **Schedule H-13** | | | | | |
| 3 | **Investment Tax Credits** | | | | | |
| 4 | **Base Period Ending 6/30/2026** | | | | | |
| 5 | **Test Period Ending 9/30/2028** | | | | | |
| 6 | **This schedule is sponsored by PNM** | | | | | |
| 7 | **Witness Morris** | | | | | |
| 8 | | | | | | |
| 9 | **Description** | **Unadjusted Base Period** | **Base Period Adjustments** | **Adjusted Base Period** | **Linkage Jul-2026- Jun-2027** | **Linkage Oct-2026- Sep-2027** |
| 10 | | | | | | |
| 11 | **Pre-1987 ITC** | | | | | |
| 12 | | | | | | |
| 13 | Balance at beginning of period | 4,452,133 | | 4,452,133 | 4,282,756 | 4,113,603 |
| 14 | Earned | | | - | | |
| 15 | Utilized | | | | | |
| 16 | Amortized | (169,377) | - | (169,377) | (169,153) | (168,921) |
| 17 | Adjustments | | | - | | |
| 18 | Reclasses | | - | - | | |
| 19 | **Balance at end of period** | **4,282,756** | **-** | **4,282,756** | **4,113,603** | **3,944,682** |
| 20 | | | | | | |
| 21 | **ITC on Renewables** | | | | | |
| 22 | | | | | | |
| 23 | Balance at beginning of period | 68,656,715 | | 68,656,715 | 76,050,472 | 76,050,472 |
| 24 | Earned | 7,393,757 | | 7,393,757 | | 27,902,573 |
| 25 | Utilized | | | | | |
| 26 | Amortized | | - | | | |
| 27 | Adjustments | | | - | | |
| 28 | Reclasses | - | - | - | | |
| 29 | **Balance at end of period** | **76,050,472** | **-** | **76,050,472** | **76,050,472** | **103,953,045** |
| 30 | | | | | | |
| 31 | Notes: | | | | | |
| 32 | Base period data is historical | | | | | |
| 33 | information from the Company's Book | | | | | |
| 34 | Balance Amounts. | | | | | |
| 35 | Provides data to PNM Exhibit | | | | | |
| 36 | RNG-3 COS Base Adj, COS Test | | | | | |

| | A | G | H | I | J |
|---|---|---|---|---|---|
| 1 | **Public Service Company of New Mexico** | | | | |
| 2 | **Schedule H-13** | | | | |
| 3 | **Investment Tax Credits** | | | | |
| 4 | **Base Period Ending 6/30/2026** | | | | |
| 5 | **Test Period Ending 9/30/2028** | | | | |
| 6 | **This schedule is sponsored by PNM** | | | | |
| 7 | **Witness Morris** | | | | |
| 8 | | | | | |
| 9 | **Description** | **Test Period** | **Adjusted Base and Test Period Variance** | **Variance Percentage** | **Reference** |
| 10 | | | | | |
| 11 | **Pre-1987 ITC** | | | | |
| 12 | | | | | |
| 13 | Balance at beginning of period | 3,944,682 | (507,451) | | |
| 14 | Earned | | | | |
| 15 | Utilized | | | | |
| 16 | Amortized | (168,898) | 479 | | |
| 17 | Adjustments | | | | |
| 18 | Reclasses | | | | |
| 19 | **Balance at end of period** | **3,775,784** | **(506,972)** | | |
| 20 | | | | | |
| 21 | **ITC on Renewables** | | | | |
| 22 | | | | | |
| 23 | Balance at beginning of period | 103,953,045 | 35,296,330 | | |
| 24 | Earned | 78,969,643 | 71,575,886 | | |
| 25 | Utilized | | - | | |
| 26 | Amortized | (13,043,732) | (13,043,732) | 7700.73% | PNM Exhibit RNG-3 COS Test, Line 651 |
| 27 | Adjustments | | - | | |
| 28 | Reclasses | | - | | |
| 29 | **Balance at end of period** | **169,878,957** | **93,828,485** | | |
| 30 | | | | | |
| 31 | Notes: | | | | |
| 32 | Base period data is historical | | | | |
| 33 | information from the Company's Book | | | | |
| 34 | Balance Amounts. | | | | |
| 35 | Provides data to PNM Exhibit | | | | |
| 36 | RNG-3 COS Base Adj, COS Test | | | | |

# PNM Schedule H-14

Expenses associated with affiliated interests

| | A | B | C | D | E | F | G |
|---|---|---|---|---|---|---|---|
| 1 | **Public Service Company of New Mexico** | | | | | | |
| 2 | **Schedule H-14** | | | | | | |
| 3 | **Expenses Associated with Affiliated Interests** | | | | | | |
| 4 | **Base Period Ending 6/30/2026** | | | | | | |
| 5 | **Test Period Ending 9/30/2028** | | | | | | |
| 6 | **This schedule is sponsored by PNM Witness Gutierrez** | | | | | | |
| 7 | | | | | | | |
| 8 | | | | | | | **Note 1** |
| 9 | **PNMR Loc No** | **Cost Type** | **Cost Type Description** | **Total Shared Services Base Period** | **Total Shared Services Charged to PNM Base Period** | **Base Period Adjustments** | **Total Adjusted Base** |
| 10 | 911 | 110 | Straight Time-General | 2,348,227 | 1,523,495 | 149,990 | 1,673,485 |
| 11 | | 120 | Overtime-General | 3,746 | 2,456 | 8 | 2,464 |
| 12 | | 140 | Misc Pay Pension Eligible | 30,000 | 19,449 | 285 | 19,734 |
| 13 | | 150 | Paid Absence | 16,505 | 10,642 | (5,795) | 4,847 |
| 14 | | 151 | Vacation | - | - | 365,623 | 365,623 |
| 15 | | 152 | Illness | - | - | - | - |
| 16 | | 153 | Holiday | - | - | (0) | (0) |
| 17 | | 324 | Postage Expenses | 5,001 | 3,241 | 49 | 3,290 |
| 18 | | 331 | Supplies and Equipment | 4,534 | 2,956 | 27 | 2,983 |
| 19 | | 370 | Outside Services | 2,616,657 | 1,696,929 | 24,307 | 1,721,237 |
| 20 | | 374 | Outside Svcs Legal | - | - | - | - |
| 21 | | 406 | Computer Maintenance | 1,335,851 | 865,926 | 12,796 | 878,723 |
| 22 | | 421 | Depreciation | 1,733,098 | 1,126,490 | (1,126,490) | - |
| 23 | | 422 | Amortization | - | - | - | - |
| 24 | | 428 | Computer Software | 5,647 | 3,607 | 107 | 3,715 |
| 25 | | 429 | Computer Hardware | - | - | - | - |
| 26 | | 501 | Phones | 7,210 | 4,642 | 101 | 4,743 |
| 27 | | 530 | Employee Expense | 21,810 | 14,071 | (1,385) | 12,686 |
| 28 | | 550 | Meals | 4,154 | 2,687 | 46 | 2,733 |
| 29 | | 554 | Professional Dues | 133 | 88 | - | 88 |
| 30 | | 555 | Repro and Printing - Internal | 592 | 386 | 3 | 389 |
| 31 | | 560 | Dues Fees Fines | 62,250 | 39,664 | 1,283 | 40,948 |
| 32 | | 600 | Incentive Compensation | 22,891 | 14,873 | (14,873) | - |
| 33 | | 911 | Time Off Allowances | 356,226 | 231,114 | (231,114) | - |
| 34 | | 921 | Stores / Purchasing Load | 1,373 | 887 | 16 | 903 |
| 35 | **Total 911 - Financial Systems** | | | **8,575,903** | **5,563,605** | **(825,016)** | **4,738,589** |
| 36 | | | | | | | |

| | A | B | C | D | E | F | G |
|---|---|---|---|---|---|---|---|
| 1 | **Public Service Company of New Mexico** | | | | | | |
| 2 | **Schedule H-14** | | | | | | |
| 3 | **Expenses Associated with Affiliated Interests** | | | | | | |
| 4 | **Base Period Ending 6/30/2026** | | | | | | |
| 5 | **Test Period Ending 9/30/2028** | | | | | | |
| 6 | **This schedule is sponsored by PNM Witness Gutierrez** | | | | | | |
| 7 | | | | | | | |
| 8 | | | | | | | **Note 1** |
| 9 | **PNMR Loc No** | **Cost Type** | **Cost Type Description** | **Total Shared Services Base Period** | **Total Shared Services Charged to PNM Base Period** | **Base Period Adjustments** | **Total Adjusted Base** |
| 37 | 912 | 110 | Straight Time-General | 373,863 | 226,873 | 11,415 | 238,288 |
| 38 | | 120 | Overtime-General | 4,162 | 2,616 | 17 | 2,632 |
| 39 | | 140 | Misc Pay Pension Eligible | - | - | - | - |
| 40 | | 150 | Paid Absence | 863 | 521 | (521) | - |
| 41 | | 151 | Vacation | - | - | 39,469 | 39,469 |
| 42 | | 152 | Illness | 7,890 | 4,990 | (4,990) | - |
| 43 | | 153 | Holiday | - | - | 0 | 0 |
| 44 | | 331 | Supplies and Equipment | 6,953 | 4,174 | 224 | 4,397 |
| 45 | | 377 | Outside Services-Temp Labor | - | - | - | - |
| 46 | | 501 | Phones | 840 | 510 | 21 | 531 |
| 47 | | 530 | Employee Expense | 64 | 41 | - | 41 |
| 48 | | 550 | Meals | - | - | - | - |
| 49 | | 555 | Repro and Printing - Internal | - | - | - | - |
| 50 | | 911 | Time Off Allowances | 56,715 | 34,417 | (34,417) | - |
| 51 | | 921 | Stores / Purchasing Load | 19 | 12 | 1 | 12 |
| 52 | **Total 912 - Accounts Payable** | | | **451,370** | **274,153** | **11,218** | **285,371** |
| 53 | | | | | | | |

| | A | B | C | D | E | F | G |
|---|---|---|---|---|---|---|---|
| 1 | **Public Service Company of New Mexico** | | | | | | |
| 2 | **Schedule H-14** | | | | | | |
| 3 | **Expenses Associated with Affiliated Interests** | | | | | | |
| 4 | **Base Period Ending 6/30/2026** | | | | | | |
| 5 | **Test Period Ending 9/30/2028** | | | | | | |
| 6 | **This schedule is sponsored by PNM Witness Gutierrez** | | | | | | |
| 7 | | | | | | | |
| 8 | | | | | | | **Note 1** |
| 9 | **PNMR Loc No** | **Cost Type** | **Cost Type Description** | **Total Shared Services Base Period** | **Total Shared Services Charged to PNM Base Period** | **Base Period Adjustments** | **Total Adjusted Base** |
| 54 | 914 | 110 | Straight Time-General | 683,226 | 399,487 | 7,431 | 406,918 |
| 55 | | 150 | Paid Absence | 990 | 575 | (575) | - |
| 56 | | 151 | Vacation | - | - | 41,188 | 41,188 |
| 57 | | 153 | Holiday | - | - | (0) | (0) |
| 58 | | 332 | Subsciptions & Renewals | 350 | 201 | - | 201 |
| 59 | | 370 | Outside Services | - | - | - | - |
| 60 | | 421 | Depreciation | 232,111 | 135,773 | (135,773) | - |
| 61 | | 422 | Amortization | - | - | - | - |
| 62 | | 530 | Employee Expense | - | - | - | - |
| 63 | | 550 | Meals | - | - | - | - |
| 64 | | 911 | Time Off Allowances | 103,645 | 60,602 | (60,602) | - |
| 65 | | 921 | Stores / Purchasing Load | - | - | - | - |
| 66 | **Total 914 - Asset Management** | | | **1,020,322** | **596,639** | **(148,332)** | **448,307** |
| 67 | | | | | | | |
| 68 | 917 | 110 | Straight Time-General | 122 | - | - | - |
| 69 | | 150 | Paid Absence | 152 | - | - | - |
| 70 | | 370 | Outside Services | (0) | - | - | - |
| 71 | | 450 | Insurance Premiums | - | - | - | - |
| 72 | | 600 | Incentive Compensation | (1,609) | - | - | - |
| 73 | | 883 | Tax-FICA | 10 | - | - | - |
| 74 | | 911 | Time Off Allowances | 18 | - | - | - |
| 75 | **Total 917 - Corp Alloc 100pct PNMR DM** | | | **(1,307)** | **-** | **-** | **-** |
| 76 | | | | | | | |

| | A | B | C | D | E | F | G |
|---|---|---|---|---|---|---|---|
| 1 | **Public Service Company of New Mexico** | | | | | | |
| 2 | **Schedule H-14** | | | | | | |
| 3 | **Expenses Associated with Affiliated Interests** | | | | | | |
| 4 | **Base Period Ending 6/30/2026** | | | | | | |
| 5 | **Test Period Ending 9/30/2028** | | | | | | |
| 6 | **This schedule is sponsored by PNM Witness Gutierrez** | | | | | | |
| 7 | | | | | | | |
| 8 | | | | | | | **Note 1** |
| 9 | **PNMR Loc No** | **Cost Type** | **Cost Type Description** | **Total Shared Services Base Period** | **Total Shared Services Charged to PNM Base Period** | **Base Period Adjustments** | **Total Adjusted Base** |
| 77 | 941 | 110 | Straight Time-General | 11,937,055 | 7,723,289 | (608,480) | 7,114,809 |
| 78 | | 120 | Overtime-General | 90,544 | 58,562 | 210 | 58,772 |
| 79 | | 140 | Misc Pay Pension Eligible | 143,939 | 93,040 | 391 | 93,431 |
| 80 | | 150 | Paid Absence | 49,119 | 31,775 | 15,595 | 47,370 |
| 81 | | 151 | Vacation | - | - | 849,032 | 849,032 |
| 82 | | 152 | Illness | 6,100 | 3,947 | 28,181 | 32,128 |
| 83 | | 153 | Holiday | - | - | 0 | 0 |
| 84 | | 200 | Fleet Vehicle Maint-Rental | - | - | - | - |
| 85 | | 204 | Fleet Maintenance Expense | 22,056 | 14,263 | 54 | 14,316 |
| 86 | | 205 | Fleet Fuel Expense | - | - | - | - |
| 87 | | 324 | Postage Expenses | 51,075 | 33,021 | 131 | 33,153 |
| 88 | | 325 | Freight | 77,168 | 49,883 | 207 | 50,090 |
| 89 | | 331 | Supplies and Equipment | 98,202 | 63,345 | 272 | 63,617 |
| 90 | | 332 | Subsciptions & Renewals | (219) | (143) | 1 | (142) |
| 91 | | 359 | Non-Stock Materials | 4,702 | 3,051 | 0 | 3,052 |
| 92 | | 370 | Outside Services | 2,950,591 | 1,910,006 | (182,539) | 1,727,467 |
| 93 | | 374 | Outside Svcs Legal | 533,528 | 344,825 | 1,195 | 346,020 |
| 94 | | 377 | Outside Services-Temp Labor | 99,090 | 64,038 | 281 | 64,319 |
| 95 | | 406 | Computer Maintenance | 223,113 | 144,391 | 431 | 144,823 |
| 96 | | 421 | Depreciation | 7,484,756 | 4,841,551 | (4,841,551) | - |
| 97 | | 422 | Amortization | - | - | - | - |
| 98 | | 426 | Capitalized Interest | (1,391,809) | (900,572) | (2,851) | (903,423) |
| 99 | | 428 | Computer Software | 134,245 | 87,070 | 69 | 87,138 |
| 100 | | 429 | Computer Hardware | 4,835 | 3,137 | 2 | 3,138 |
| 101 | | 450 | Insurance Premiums | 4,588,043 | 2,966,125 | 11,973 | 2,978,099 |
| 102 | | 473 | Lease - Short Term | - | - | - | - |
| 103 | | 501 | Phones | 31,203 | 20,184 | 70 | 20,254 |

| | A | B | C | D | E | F | G |
|---|---|---|---|---|---|---|---|
| 1 | **Public Service Company of New Mexico** | | | | | | |
| 2 | **Schedule H-14** | | | | | | |
| 3 | **Expenses Associated with Affiliated Interests** | | | | | | |
| 4 | **Base Period Ending 6/30/2026** | | | | | | |
| 5 | **Test Period Ending 9/30/2028** | | | | | | |
| 6 | **This schedule is sponsored by PNM Witness Gutierrez** | | | | | | |
| 7 | | | | | | | |
| 8 | | | | | | | **Note 1** |
| 9 | **PNMR Loc No** | **Cost Type** | **Cost Type Description** | **Total Shared Services Base Period** | **Total Shared Services Charged to PNM Base Period** | **Base Period Adjustments** | **Total Adjusted Base** |
| 104 | | 522 | Damages - Payment | 13,395 | 8,668 | 27 | 8,695 |
| 105 | | 525 | Damages - General | - | - | - | - |
| 106 | | 530 | Employee Expense | 407,545 | 263,024 | (21,497) | 241,527 |
| 107 | | 550 | Meals | 73,134 | 47,301 | 8 | 47,309 |
| 108 | | 554 | Professional Dues | 27,160 | 17,531 | (170) | 17,361 |
| 109 | | 555 | Repro and Printing - Internal | 13,737 | 8,879 | 38 | 8,917 |
| 110 | | 560 | Dues Fees Fines | 2,448,037 | 1,583,590 | (1,051,603) | 531,987 |
| 111 | | 600 | Incentive Compensation | 4,478,347 | 2,902,683 | (2,902,683) | - |
| 112 | | 610 | Expenses - General | 3,196 | 2,070 | 4 | 2,074 |
| 113 | | 622 | Contributions and Donations | 15,450 | 9,991 | (9,991) | - |
| 114 | | 875 | Tax-Property-NM Non-Leased | 1,578,504 | 1,021,485 | (1,021,485) | - |
| 115 | | 880 | Tax-Gross Receipts | - | - | - | - |
| 116 | | 882 | Tax-Compensating | (186) | (121) | (0) | (121) |
| 117 | | 883 | Tax-FICA | 19,138 | 12,532 | (12,532) | - |
| 118 | | 889 | Tax-Federal Excise | 410,742 | 265,647 | 965 | 266,613 |
| 119 | | 911 | Time Off Allowances | 1,810,748 | 1,171,556 | (1,171,556) | - |
| 120 | | 913 | Payroll Taxes Load | 9,623 | 6,228 | (6,228) | - |
| 121 | | 914 | Pension and Benefits Load | 26,197 | 16,954 | (16,954) | - |
| 122 | | 915 | Injuries and Damages Load | 2,499 | 1,617 | (1,617) | - |
| 123 | | 921 | Stores / Purchasing Load | 9,064 | 5,868 | 16 | 5,884 |
| 124 | **Total 941 - Direct PNMR Utility** | | | **38,483,663** | **24,900,294** | **(10,942,585)** | **13,957,709** |
| 125 | | | | | | | |

| | A | B | C | D | E | F | G |
|---|---|---|---|---|---|---|---|
| 1 | **Public Service Company of New Mexico** | | | | | | |
| 2 | **Schedule H-14** | | | | | | |
| 3 | **Expenses Associated with Affiliated Interests** | | | | | | |
| 4 | **Base Period Ending 6/30/2026** | | | | | | |
| 5 | **Test Period Ending 9/30/2028** | | | | | | |
| 6 | **This schedule is sponsored by PNM Witness Gutierrez** | | | | | | |
| 7 | | | | | | | |
| 8 | | | | | | | **Note 1** |
| 9 | **PNMR Loc No** | **Cost Type** | **Cost Type Description** | **Total Shared Services Base Period** | **Total Shared Services Charged to PNM Base Period** | **Base Period Adjustments** | **Total Adjusted Base** |
| 126 | 942 | 110 | Straight Time-General | 1,400,126 | 1,400,126 | 105,363 | 1,505,488 |
| 127 | | 120 | Overtime-General | 13,209 | 13,209 | - | 13,209 |
| 128 | | 150 | Paid Absence | 3,669 | 3,669 | (1,267) | 2,402 |
| 129 | | 151 | Vacation | - | - | 116,385 | 116,385 |
| 130 | | 152 | Illness | 22,553 | 22,553 | (22,553) | - |
| 131 | | 153 | Holiday | - | - | 0 | 0 |
| 132 | | 200 | Fleet Vehicle Maint-Rental | - | - | - | - |
| 133 | | 204 | Fleet Maintenance Expense | 76,144 | 76,144 | - | 76,144 |
| 134 | | 205 | Fleet Fuel Expense | - | - | - | - |
| 135 | | 331 | Supplies and Equipment | 18,479 | 18,479 | - | 18,479 |
| 136 | | 370 | Outside Services | 3,304,048 | 3,304,048 | - | 3,304,048 |
| 137 | | 374 | Outside Svcs Legal | 68,629 | 68,629 | - | 68,629 |
| 138 | | 377 | Outside Services-Temp Labor | - | - | - | - |
| 139 | | 406 | Computer Maintenance | 39,816 | 39,816 | - | 39,816 |
| 140 | | 421 | Depreciation | (45,965) | (45,965) | 45,965 | - |
| 141 | | 426 | Capitalized Interest | - | - | - | - |
| 142 | | 427 | Interest Inc/Exp | (5,448) | (5,448) | - | (5,448) |

| | A | B | C | D | E | F | G |
|---|---|---|---|---|---|---|---|
| 1 | **Public Service Company of New Mexico** | | | | | | |
| 2 | **Schedule H-14** | | | | | | |
| 3 | **Expenses Associated with Affiliated Interests** | | | | | | |
| 4 | **Base Period Ending 6/30/2026** | | | | | | |
| 5 | **Test Period Ending 9/30/2028** | | | | | | |
| 6 | **This schedule is sponsored by PNM Witness Gutierrez** | | | | | | |
| 7 | | | | | | | |
| 8 | | | | | | | **Note 1** |
| 9 | **PNMR Loc No** | **Cost Type** | **Cost Type Description** | **Total Shared Services Base Period** | **Total Shared Services Charged to PNM Base Period** | **Base Period Adjustments** | **Total Adjusted Base** |
| 143 | | 428 | Computer Software | 22,354 | 22,354 | - | 22,354 |
| 144 | | 429 | Computer Hardware | - | - | - | - |
| 145 | | 450 | Insurance Premiums | 793,968 | 793,968 | - | 793,968 |
| 146 | | 473 | Lease - Short Term | - | - | - | - |
| 147 | | 500 | Utility Payments | 61,553 | 61,553 | - | 61,553 |
| 148 | | 501 | Phones | 1,192,625 | 1,192,625 | - | 1,192,625 |
| 149 | | 530 | Employee Expense | (92,041) | (92,041) | (195) | (92,236) |
| 150 | | 550 | Meals | 11,005 | 11,005 | - | 11,005 |
| 151 | | 555 | Repro and Printing - Internal | 18,786 | 18,786 | - | 18,786 |
| 152 | | 560 | Dues Fees Fines | 4,594 | 4,594 | - | 4,594 |
| 153 | | 600 | Incentive Compensation | 7,205,216 | 7,205,216 | (5,639,076) | 1,566,140 |
| 154 | | 610 | Expenses - General | 1,611 | 1,611 | - | 1,611 |
| 155 | | 622 | Contributions and Donations | 28,281 | 28,281 | (28,281) | - |
| 156 | | 883 | Tax-FICA | 354,916 | 354,916 | (354,916) | - |
| 157 | | 911 | Time Off Allowances | 212,399 | 212,399 | (212,399) | 0 |
| 158 | | 921 | Stores / Purchasing Load | 9,726 | 9,726 | - | 9,726 |
| 159 | **Total 942 - Direct PNM Electric Services** | | | **14,720,250** | **14,720,250** | **(5,990,974)** | **8,729,276** |
| 160 | | | | | | | |

| | A | B | C | D | E | F | G |
|---|---|---|---|---|---|---|---|
| 1 | **Public Service Company of New Mexico** | | | | | | |
| 2 | **Schedule H-14** | | | | | | |
| 3 | **Expenses Associated with Affiliated Interests** | | | | | | |
| 4 | **Base Period Ending 6/30/2026** | | | | | | |
| 5 | **Test Period Ending 9/30/2028** | | | | | | |
| 6 | **This schedule is sponsored by PNM Witness Gutierrez** | | | | | | |
| 7 | | | | | | | |
| 8 | | | | | | | **Note 1** |
| 9 | **PNMR Loc No** | **Cost Type** | **Cost Type Description** | **Total Shared Services Base Period** | **Total Shared Services Charged to PNM Base Period** | **Base Period Adjustments** | **Total Adjusted Base** |
| 161 | 946 | 110 | Straight Time-General | 1,614,348 | 1,614,348 | 15,768 | 1,630,116 |
| 162 | | 120 | Overtime-General | - | - | - | - |
| 163 | | 140 | Misc Pay Pension Eligible | 10,000 | 10,000 | - | 10,000 |
| 164 | | 150 | Paid Absence | 2,724 | 2,724 | 1,104 | 3,828 |
| 165 | | 151 | Vacation | - | - | 291,405 | 291,405 |
| 166 | | 153 | Holiday | - | - | - | - |
| 167 | | 200 | Fleet Vehicle Maint-Rental | - | - | - | - |
| 168 | | 204 | Fleet Maintenance Expense | 27,965 | 27,965 | - | 27,965 |
| 169 | | 331 | Supplies and Equipment | 119 | 119 | - | 119 |
| 170 | | 370 | Outside Services | 440,754 | 440,754 | - | 440,754 |
| 171 | | 374 | Outside Svcs Legal | 9,396 | 9,396 | - | 9,396 |
| 172 | | 429 | Computer Hardware | 1,028 | 1,028 | - | 1,028 |
| 173 | | 450 | Insurance Premiums | 174,721 | 174,721 | - | 174,721 |
| 174 | | 501 | Phones | 4,965 | 4,965 | - | 4,965 |
| 175 | | 530 | Employee Expense | 5,902 | 5,902 | (190) | 5,712 |
| 176 | | 550 | Meals | 4,972 | 4,972 | - | 4,972 |
| 177 | | 560 | Dues Fees Fines | - | - | - | - |
| 178 | | 600 | Incentive Compensation | 2,292,981 | 2,292,981 | (1,373,277) | 919,705 |
| 179 | | 883 | Tax-FICA | 139,714 | 139,714 | (139,714) | - |
| 180 | | 911 | Time Off Allowances | 244,896 | 244,896 | (244,896) | - |
| 181 | | 921 | Stores / Purchasing Load | 1,951 | 1,951 | - | 1,951 |
| 182 | **Total 946 - Direct Bulk Generation** | | | **4,976,435** | **4,976,435** | **(1,449,800)** | **3,526,635** |
| 183 | | | | | | | |

| | A | B | C | D | E | F | G |
|---|---|---|---|---|---|---|---|
| 1 | **Public Service Company of New Mexico** | | | | | | |
| 2 | **Schedule H-14** | | | | | | |
| 3 | **Expenses Associated with Affiliated Interests** | | | | | | |
| 4 | **Base Period Ending 6/30/2026** | | | | | | |
| 5 | **Test Period Ending 9/30/2028** | | | | | | |
| 6 | **This schedule is sponsored by PNM Witness Gutierrez** | | | | | | |
| 7 | | | | | | | |
| 8 | | | | | | | **Note 1** |
| 9 | **PNMR Loc No** | **Cost Type** | **Cost Type Description** | **Total Shared Services Base Period** | **Total Shared Services Charged to PNM Base Period** | **Base Period Adjustments** | **Total Adjusted Base** |
| 184 | 947 | 110 | Straight Time-General | 646,991 | 646,991 | 98,067 | 745,058 |
| 185 | | 120 | Overtime-General | 4,705 | 4,705 | - | 4,705 |
| 186 | | 150 | Paid Absence | 1,468 | 1,468 | (1,468) | - |
| 187 | | 151 | Vacation | - | - | 115,852 | 115,852 |
| 188 | | 152 | Illness | - | - | - | - |
| 189 | | 153 | Holiday | - | - | 0 | 0 |
| 190 | | 200 | Fleet Vehicle Maint-Rental | - | - | 0 | 0 |
| 191 | | 204 | Fleet Maintenance Expense | 54 | 54 | - | 54 |
| 192 | | 205 | Fleet Fuel Expense | - | - | - | - |
| 193 | | 331 | Supplies and Equipment | 4,217 | 4,217 | - | 4,217 |
| 194 | | 332 | Subscriptions & Renewals | 1,243 | 1,243 | - | 1,243 |
| 195 | | 359 | Non-Stock Materials | - | - | - | - |
| 196 | | 370 | Outside Services | 475,690 | 475,690 | - | 475,690 |
| 197 | | 374 | Outside Svcs Legal | 346,670 | 346,670 | (344,268) | 2,402 |
| 198 | | 406 | Computer Maintenance | - | - | - | - |

| | A | B | C | D | E | F | G |
|---|---|---|---|---|---|---|---|
| 1 | **Public Service Company of New Mexico** | | | | | | |
| 2 | **Schedule H-14** | | | | | | |
| 3 | **Expenses Associated with Affiliated Interests** | | | | | | |
| 4 | **Base Period Ending 6/30/2026** | | | | | | |
| 5 | **Test Period Ending 9/30/2028** | | | | | | |
| 6 | **This schedule is sponsored by PNM Witness Gutierrez** | | | | | | |
| 7 | | | | | | | |
| 8 | | | | | | | **Note 1** |
| 9 | **PNMR Loc No** | **Cost Type** | **Cost Type Description** | **Total Shared Services Base Period** | **Total Shared Services Charged to PNM Base Period** | **Base Period Adjustments** | **Total Adjusted Base** |
| 199 | | 428 | Computer Software | 13,187 | 13,187 | - | 13,187 |
| 200 | | 429 | Computer Hardware | 158 | 158 | - | 158 |
| 201 | | 450 | Insurance Premiums | 160,219 | 160,219 | - | 160,219 |
| 202 | | 500 | Utility Payments | 12,911 | 12,911 | - | 12,911 |
| 203 | | 530 | Employee Expense | 91,254 | 91,254 | (7) | 91,247 |
| 204 | | 550 | Meals | 18,732 | 18,732 | - | 18,732 |
| 205 | | 555 | Repro and Printing - Internal | 4,336 | 4,336 | - | 4,336 |
| 206 | | 560 | Dues Fees Fines | 1,455,737 | 1,455,737 | - | 1,455,737 |
| 207 | | 600 | Incentive Compensation | 1,444,868 | 1,444,868 | (1,295,746) | 149,122 |
| 208 | | 610 | Expenses - General | - | - | - | - |
| 209 | | 883 | Tax-FICA | 87,993 | 87,993 | (87,993) | - |
| 210 | | 911 | Time Off Allowances | 98,148 | 98,148 | (98,148) | - |
| 211 | | 921 | Stores / Purchasing Load | 1,382 | 1,382 | - | 1,382 |
| 212 | **Total 947 - Direct PNM Elec Transmission** | | | **4,869,965** | **4,869,965** | **(1,613,712)** | **3,256,253** |
| 213 | | | | | | | |

| | A | B | C | D | E | F | G |
|---|---|---|---|---|---|---|---|
| 1 | **Public Service Company of New Mexico** | | | | | | |
| 2 | **Schedule H-14** | | | | | | |
| 3 | **Expenses Associated with Affiliated Interests** | | | | | | |
| 4 | **Base Period Ending 6/30/2026** | | | | | | |
| 5 | **Test Period Ending 9/30/2028** | | | | | | |
| 6 | **This schedule is sponsored by PNM Witness Gutierrez** | | | | | | |
| 7 | | | | | | | |
| 8 | | | | | | | **Note 1** |
| 9 | **PNMR Loc No** | **Cost Type** | **Cost Type Description** | **Total Shared Services Base Period** | **Total Shared Services Charged to PNM Base Period** | **Base Period Adjustments** | **Total Adjusted Base** |
| 214 | 948 | 110 | Straight Time-General | 503,196 | 503,196 | (55,541) | 447,654 |
| 215 | | 150 | Paid Absence | 4,915 | 4,915 | (1,058) | 3,858 |
| 216 | | 151 | Vacation | - | - | 64,737 | 64,737 |
| 217 | | 152 | Illness | 11,415 | 11,415 | (11,415) | - |
| 218 | | 153 | Holiday | - | - | 0 | 0 |
| 219 | | 331 | Supplies and Equipment | 457 | 457 | - | 457 |
| 220 | | 332 | Subsciptions & Renewals | 135 | 135 | - | 135 |
| 221 | | 370 | Outside Services | 45,542 | 45,542 | - | 45,542 |
| 222 | | 374 | Outside Svcs Legal | 437,184 | 437,184 | - | 437,184 |
| 223 | | 421 | Depreciation | 146,745 | 146,745 | (146,745) | - |
| 224 | | 422 | Amortization | - | - | - | - |
| 225 | | 428 | Computer Software | 12,237 | 12,237 | - | 12,237 |
| 226 | | 450 | Insurance Premiums | 43,809 | 43,809 | - | 43,809 |
| 227 | | 473 | Lease - Short Term | - | - | - | - |
| 228 | | 530 | Employee Expense | 13,874 | 13,874 | - | 13,874 |
| 229 | | 550 | Meals | 1,427 | 1,427 | - | 1,427 |
| 230 | | 555 | Repro and Printing - Internal | 2,168 | 2,168 | (2,036) | 132 |
| 231 | | 911 | Time Off Allowances | 76,418 | 76,418 | (76,418) | - |
| 232 | | 921 | Stores / Purchasing Load | 169 | 169 | - | 169 |
| 233 | **Total 948 - Direct PNM Util T&D (woBulk, wo Texas)*** | | | **1,299,689** | **1,299,689** | **(228,475)** | **1,071,214** |
| 234 | | | | | | | |

| | A | B | C | D | E | F | G |
|---|---|---|---|---|---|---|---|
| 1 | **Public Service Company of New Mexico** | | | | | | |
| 2 | **Schedule H-14** | | | | | | |
| 3 | **Expenses Associated with Affiliated Interests** | | | | | | |
| 4 | **Base Period Ending 6/30/2026** | | | | | | |
| 5 | **Test Period Ending 9/30/2028** | | | | | | |
| 6 | **This schedule is sponsored by PNM Witness Gutierrez** | | | | | | |
| 7 | | | | | | | |
| 8 | | | | | | | **Note 1** |
| 9 | **PNMR Loc No** | **Cost Type** | **Cost Type Description** | **Total Shared Services Base Period** | **Total Shared Services Charged to PNM Base Period** | **Base Period Adjustments** | **Total Adjusted Base** |
| 235 | 951 | 110 | Straight Time-General | 4,309,200 | 4,309,200 | (295,218) | 4,013,982 |
| 236 | | 120 | Overtime-General | 2,525 | 2,525 | - | 2,525 |
| 237 | | 140 | Misc Pay Pension Eligible | 1,915 | 1,915 | - | 1,915 |
| 238 | | 150 | Paid Absence | 19,131 | 19,131 | 1,588 | 20,719 |
| 239 | | 151 | Vacation | - | - | 274,644 | 274,644 |
| 240 | | 152 | Illness | - | - | - | - |
| 241 | | 153 | Holiday | - | - | 0 | 0 |
| 242 | | 200 | Fleet Vehicle Maint-Rental | - | - | - | - |
| 243 | | 204 | Fleet Maintenance Expense | 46,530 | 46,530 | - | 46,530 |
| 244 | | 331 | Supplies and Equipment | 7,483 | 7,483 | (716) | 6,766 |
| 245 | | 332 | Subsciptions & Renewals | 884 | 884 | - | 884 |
| 246 | | 370 | Outside Services | 2,810,208 | 2,810,208 | (1,776,017) | 1,034,191 |
| 247 | | 374 | Outside Svcs Legal | 38,339 | 38,339 | (658) | 37,682 |
| 248 | | 377 | Outside Services-Temp Labor | 230,282 | 230,282 | - | 230,282 |
| 249 | | 406 | Computer Maintenance | 142,903 | 142,903 | - | 142,903 |
| 250 | | 421 | Depreciation | 299,396 | 299,396 | (299,396) | - |
| 251 | | 422 | Amortization | - | - | - | - |
| 252 | | 427 | Interest Inc/Exp | (2,569) | (2,569) | - | (2,569) |
| 253 | | 428 | Computer Software | 73,056 | 73,056 | - | 73,056 |
| 254 | | 429 | Computer Hardware | 1,816 | 1,816 | - | 1,816 |
| 255 | | 450 | Insurance Premiums | - | - | - | - |
| 256 | | 472 | Lease - Long Term | - | - | - | - |
| 257 | | 473 | Lease - Short Term | 31,624 | 31,624 | - | 31,624 |
| 258 | | 500 | Utility Payments | 1,361 | 1,361 | - | 1,361 |

| | A | B | C | D | E | F | G |
|---|---|---|---|---|---|---|---|
| 1 | **Public Service Company of New Mexico** | | | | | | |
| 2 | **Schedule H-14** | | | | | | |
| 3 | **Expenses Associated with Affiliated Interests** | | | | | | |
| 4 | **Base Period Ending 6/30/2026** | | | | | | |
| 5 | **Test Period Ending 9/30/2028** | | | | | | |
| 6 | **This schedule is sponsored by PNM Witness Gutierrez** | | | | | | |
| 7 | | | | | | | |
| 8 | | | | | | | **Note 1** |
| 9 | **PNMR Loc No** | **Cost Type** | **Cost Type Description** | **Total Shared Services Base Period** | **Total Shared Services Charged to PNM Base Period** | **Base Period Adjustments** | **Total Adjusted Base** |
| 259 | | 501 | Phones | 8,665 | 8,665 | - | 8,665 |
| 260 | | 530 | Employee Expense | 263,726 | 263,726 | (73,067) | 190,659 |
| 261 | | 550 | Meals | 119,266 | 119,266 | (50,040) | 69,226 |
| 262 | | 554 | Professional Dues | 543 | 543 | (1,715) | (1,172) |
| 263 | | 555 | Repro and Printing - Internal | 22,212 | 22,212 | (1,478) | 20,734 |
| 264 | | 560 | Dues Fees Fines | 425,915 | 425,915 | (32,233) | 393,683 |
| 265 | | 600 | Incentive Compensation | 11,299 | 11,299 | (11,299) | - |
| 266 | | 610 | Expenses - General | - | - | - | - |
| 267 | | 622 | Contributions and Donations | 933,538 | 933,538 | (933,538) | - |
| 268 | | 770 | Revenue-General | - | - | - | - |
| 269 | | 911 | Time Off Allowances | 653,706 | 653,706 | (653,706) | 0 |
| 270 | | 913 | Payroll Taxes Load | 9,242 | 9,242 | (9,242) | - |
| 271 | | 914 | Pension and Benefits Load | 25,160 | 25,160 | (25,160) | - |
| 272 | | 915 | Injuries and Damages Load | 2,398 | 2,398 | (2,398) | - |
| 273 | | 921 | Stores / Purchasing Load | 7,454 | 7,454 | (2,156) | 5,298 |
| 274 | **Total 951 - Direct PNM Util (w Bulk, wo Texas)** | | | **10,497,211** | **10,497,211** | **(3,891,807)** | **6,605,404** |
| 275 | | | | | | | |

| | A | B | C | D | E | F | G |
|---|---|---|---|---|---|---|---|
| 1 | **Public Service Company of New Mexico** | | | | | | |
| 2 | **Schedule H-14** | | | | | | |
| 3 | **Expenses Associated with Affiliated Interests** | | | | | | |
| 4 | **Base Period Ending 6/30/2026** | | | | | | |
| 5 | **Test Period Ending 9/30/2028** | | | | | | |
| 6 | **This schedule is sponsored by PNM Witness Gutierrez** | | | | | | |
| 7 | | | | | | | |
| 8 | | | | | | | **Note 1** |
| 9 | **PNMR Loc No** | **Cost Type** | **Cost Type Description** | **Total Shared Services Base Period** | **Total Shared Services Charged to PNM Base Period** | **Base Period Adjustments** | **Total Adjusted Base** |
| 276 | 953 | 110 | Straight Time-General | 1,688,742 | - | - | - |
| 277 | | 120 | Overtime-General | 130 | - | - | - |
| 278 | | 140 | Misc Pay Pension Eligible | - | - | - | - |
| 279 | | 150 | Paid Absence | 4,522 | - | - | - |
| 280 | | 151 | Vacation | - | - | - | - |
| 281 | | 152 | Illness | - | - | - | - |
| 282 | | 153 | Holiday | - | - | - | - |
| 283 | | 200 | Fleet Vehicle Maint-Rental | - | - | - | - |
| 284 | | 204 | Fleet Maintenance Expense | 922 | - | - | - |
| 285 | | 205 | Fleet Fuel Expense | 75 | - | - | - |
| 286 | | 324 | Postage Expenses | - | - | - | - |
| 287 | | 325 | Freight | 69,817 | - | - | - |
| 288 | | 331 | Supplies and Equipment | 123 | - | - | - |
| 289 | | 359 | Non-Stock Materials | 2,683 | - | - | - |
| 290 | | 370 | Outside Services | 2,244,214 | - | - | - |
| 291 | | 374 | Outside Svcs Legal | 21,604 | - | - | - |
| 292 | | 377 | Outside Services-Temp Labor | 104,207 | - | - | - |
| 293 | | 406 | Computer Maintenance | 712,654 | - | - | - |
| 294 | | 421 | Depreciation | - | - | - | - |
| 295 | | 422 | Amortization | - | - | - | - |
| 296 | | 428 | Computer Software | 97,525 | - | - | - |
| 297 | | 429 | Computer Hardware | - | - | - | - |
| 298 | | 450 | Insurance Premiums | 598,298 | - | - | - |
| 299 | | 472 | Lease - Long Term | - | - | - | - |
| 300 | | 473 | Lease - Short Term | 29,223 | - | - | - |

| | A | B | C | D | E | F | G |
|---|---|---|---|---|---|---|---|
| 1 | **Public Service Company of New Mexico** | | | | | | |
| 2 | **Schedule H-14** | | | | | | |
| 3 | **Expenses Associated with Affiliated Interests** | | | | | | |
| 4 | **Base Period Ending 6/30/2026** | | | | | | |
| 5 | **Test Period Ending 9/30/2028** | | | | | | |
| 6 | **This schedule is sponsored by PNM Witness Gutierrez** | | | | | | |
| 7 | | | | | | | |
| 8 | | | | | | | **Note 1** |
| 9 | **PNMR Loc No** | **Cost Type** | **Cost Type Description** | **Total Shared Services Base Period** | **Total Shared Services Charged to PNM Base Period** | **Base Period Adjustments** | **Total Adjusted Base** |
| 301 | | 501 | Phones | 980,230 | - | - | - |
| 302 | | 530 | Employee Expense | 85,706 | - | - | - |
| 303 | | 550 | Meals | 5,226 | - | - | - |
| 304 | | 555 | Repro and Printing - Internal | 50 | - | - | - |
| 305 | | 560 | Dues Fees Fines | 214,538 | - | - | - |
| 306 | | 600 | Incentive Compensation | 5,079,844 | - | - | - |
| 307 | | 610 | Expenses - General | 221 | - | - | - |
| 308 | | 883 | Tax-FICA | 238,551 | - | - | - |
| 309 | | 911 | Time Off Allowances | 256,182 | - | - | - |
| 310 | | 913 | Payroll Taxes Load | - | - | - | - |
| 311 | | 914 | Pension and Benefits Load | - | - | - | - |
| 312 | | 915 | Injuries and Damages Load | - | - | - | - |
| 313 | | 921 | Stores / Purchasing Load | 7,755 | - | - | - |
| 314 | **Total 953 - Direct TNMP Texas** | | | **12,443,041** | **-** | **-** | **-** |
| 315 | | | | | | | |
| 316 | 954 | 110 | Straight Time-General | - | - | - | - |
| 317 | | 406 | Computer Maintenance | - | - | - | - |
| 318 | | 450 | Insurance Premiums | - | - | - | - |
| 319 | | 501 | Phones | - | - | - | - |
| 320 | | 530 | Employee Expense | - | - | - | - |
| 321 | | 550 | Meals | - | - | - | - |
| 322 | | 600 | Incentive Compensation | - | - | - | - |
| 323 | | 622 | Contributions and Donations | - | - | - | - |
| 324 | | 883 | Tax-FICA | - | - | - | - |
| 325 | | 911 | Time Off Allowances | - | - | - | - |
| 326 | **Total 954 - Direct SNM Distribution** | | | | | **-** | **-** |

| | A | B | C | D | E | F | G |
|---|---|---|---|---|---|---|---|
| 1 | **Public Service Company of New Mexico** | | | | | | |
| 2 | **Schedule H-14** | | | | | | |
| 3 | **Expenses Associated with Affiliated Interests** | | | | | | |
| 4 | **Base Period Ending 6/30/2026** | | | | | | |
| 5 | **Test Period Ending 9/30/2028** | | | | | | |
| 6 | **This schedule is sponsored by PNM Witness Gutierrez** | | | | | | |
| 7 | | | | | | | |
| 8 | | | | | | | **Note 1** |
| 9 | **PNMR Loc No** | **Cost Type** | **Cost Type Description** | **Total Shared Services Base Period** | **Total Shared Services Charged to PNM Base Period** | **Base Period Adjustments** | **Total Adjusted Base** |
| 327 | | | | | | | |
| 328 | 963 | 110 | Straight Time-General | - | - | - | - |
| 329 | | 150 | Paid Absence | - | - | - | - |
| 330 | | 151 | Vacation | - | - | - | - |
| 331 | | 153 | Holiday | - | - | - | - |
| 332 | | 200 | Fleet Vehicle Maint-Rental | - | - | - | - |
| 333 | | 331 | Supplies and Equipment | - | - | - | - |
| 334 | | 359 | Non-Stock Materials | - | - | - | - |
| 335 | | 370 | Outside Services | - | - | - | - |
| 336 | | 374 | Outside Svcs Legal | - | - | - | - |
| 337 | | 406 | Computer Maintenance | - | - | - | - |
| 338 | | 472 | Leases | - | - | - | - |
| 339 | | 501 | Phones | - | - | - | - |
| 340 | | 530 | Employee Expense | - | - | - | - |
| 341 | | 550 | Meals | - | - | - | - |
| 342 | | 555 | Repro and Printing - Internal | - | - | - | - |
| 343 | | 560 | Dues Fees Fines | - | - | - | - |
| 344 | | 911 | Time Off Allowances | - | - | - | - |
| 345 | | 921 | Stores / Purchasing Load | - | - | - | - |
| 346 | **Total 963 - IT - Telecom** | | | **-** | **-** | **-** | **-** |
| 347 | | | | | | | |
| 348 | 964 | 421 | Depreciation | - | - | - | |
| 349 | | 422 | Amortization | - | - | - | |
| 350 | **Total 964 - IT - Desktops** | | | **-** | **-** | **-** | **-** |

| | A | B | C | D | E | F | G |
|---|---|---|---|---|---|---|---|
| 1 | **Public Service Company of New Mexico** | | | | | | |
| 2 | **Schedule H-14** | | | | | | |
| 3 | **Expenses Associated with Affiliated Interests** | | | | | | |
| 4 | **Base Period Ending 6/30/2026** | | | | | | |
| 5 | **Test Period Ending 9/30/2028** | | | | | | |
| 6 | **This schedule is sponsored by PNM Witness Gutierrez** | | | | | | |
| 7 | | | | | | | |
| 8 | | | | | | | **Note 1** |
| 9 | **PNMR Loc No** | **Cost Type** | **Cost Type Description** | **Total Shared Services Base Period** | **Total Shared Services Charged to PNM Base Period** | **Base Period Adjustments** | **Total Adjusted Base** |
| 351 | | | | | | | |
| 352 | 968 | 110 | Straight Time-General | 8,318,507 | 6,139,474 | 407,275 | 6,546,749 |
| 353 | | 120 | Overtime-General | 49 | 37 | (1) | 36 |
| 354 | | 140 | Misc Pay Pension Eligible | 21,732 | 15,886 | - | 15,886 |
| 355 | | 150 | Paid Absence | 92,540 | 68,421 | 157,966 | 226,387 |
| 356 | | 151 | Vacation | (117,709) | (86,910) | 568,382 | 481,471 |
| 357 | | 152 | Illness | 21,564 | 15,944 | (15,944) | - |
| 358 | | 153 | Holiday | - | - | 0 | 0 |
| 359 | | 200 | Fleet Vehicle Maint-Rental | - | - | - | - |
| 360 | | 204 | Fleet Maintenance Expense | 36,483 | 26,890 | (221) | 26,669 |
| 361 | | 325 | Freight | 1,929 | 1,420 | (10) | 1,410 |
| 362 | | 331 | Supplies and Equipment | 10,558 | 7,774 | (57) | 7,718 |
| 363 | | 332 | Subsciptions & Renewals | - | - | - | - |
| 364 | | 359 | Non-Stock Materials | 29,707 | 22,111 | (395) | 21,716 |
| 365 | | 370 | Outside Services | 6,036,312 | 4,462,813 | (50,269) | 4,412,544 |
| 366 | | 374 | Outside Svcs Legal | 5,481 | 3,972 | 35 | 4,007 |
| 367 | | 377 | Outside Services-Temp Labor | 164,751 | 122,013 | (1,580) | 120,433 |
| 368 | | 406 | Computer Maintenance | 3,189,552 | 2,357,952 | (26,390) | 2,331,562 |
| 369 | | 421 | Depreciation | 34,294,849 | 25,313,628 | (25,313,628) | - |
| 370 | | 422 | Amortization | - | - | - | - |
| 371 | | 426 | Capitalized Interest | 6 | 4 | (0) | 4 |
| 372 | | 427 | Interest Inc/Exp | - | - | - | - |
| 373 | | 428 | Computer Software | 114,939 | 83,946 | 75 | 84,021 |
| 374 | | 429 | Computer Hardware | 12,604 | 9,322 | (108) | 9,213 |
| 375 | | 472 | Lease - Long Term | 75,946 | 56,071 | (554) | 55,516 |
| 376 | | 473 | Lease - Short Term | 16,677 | 12,438 | (247) | 12,191 |
| 377 | | 500 | Utility Payments | 325 | 237 | - | 237 |

| | A | B | C | D | E | F | G |
|---|---|---|---|---|---|---|---|
| 1 | **Public Service Company of New Mexico** | | | | | | |
| 2 | **Schedule H-14** | | | | | | |
| 3 | **Expenses Associated with Affiliated Interests** | | | | | | |
| 4 | **Base Period Ending 6/30/2026** | | | | | | |
| 5 | **Test Period Ending 9/30/2028** | | | | | | |
| 6 | **This schedule is sponsored by PNM Witness Gutierrez** | | | | | | |
| 7 | | | | | | | |
| 8 | | | | | | | **Note 1** |
| 9 | **PNMR Loc No** | **Cost Type** | **Cost Type Description** | **Total Shared Services Base Period** | **Total Shared Services Charged to PNM Base Period** | **Base Period Adjustments** | **Total Adjusted Base** |
| 378 | | 501 | Phones | 1,650,660 | 1,218,689 | (12,057) | 1,206,632 |
| 379 | | 530 | Employee Expense | 277,818 | 205,641 | (3,939) | 201,702 |
| 380 | | 550 | Meals | 32,064 | 23,720 | (616) | 23,104 |
| 381 | | 554 | Professional Dues | 457,802 | 341,311 | (6,658) | 334,653 |
| 382 | | 555 | Repro and Printing - Internal | 2,410 | 1,796 | (34) | 1,762 |
| 383 | | 560 | Dues Fees Fines | 1,229 | 916 | (18) | 898 |
| 384 | | 600 | Incentive Compensation | 12,507 | 9,215 | (9,215) | - |
| 385 | | 610 | Expenses - General | 157,212 | 117,168 | (2,247) | 114,922 |
| 386 | | 770 | Revenue-General | - | - | - | - |
| 387 | | 911 | Time Off Allowances | 1,269,314 | 936,875 | (9,006) | 927,869 |
| 388 | | 913 | Payroll Taxes Load | 33 | 24 | (24) | - |
| 389 | | 914 | Pension and Benefits Load | 87 | 65 | (1) | 64 |
| 390 | | 915 | Injuries and Damages Load | 43 | 32 | (1) | 32 |
| 391 | | 916 | Pension Load Non-Service Cost | 4 | 3 | (0) | 3 |
| 392 | | 921 | Stores / Purchasing Load | 11,360 | 8,395 | (927,960) | (919,565) |
| 393 | | 926 | A and G Loads | 9,671 | 7,155 | (86) | 7,069 |
| 394 | **Total 968 - IT - Infrastructure** | | | **56,209,014** | **41,504,448** | **(25,247,533)** | **16,256,916** |
| 395 | | | | | | | |
| 396 | 972 | 370 | Outside Services | 442,361 | 442,361 | - | 442,361 |
| 397 | | 421 | Depreciation | 258,161 | 258,161 | (258,161) | - |
| 398 | | 422 | Amortization | - | - | - | - |
| 399 | | 610 | Expenses - General | 658,230 | 658,230 | (658,230) | - |
| 400 | | 770 | Revenue-General | (1,621,259) | (1,621,259) | 1,621,259 | - |
| 401 | | 875 | Tax-Property-NM Non-Leased | 31,010 | 31,010 | (31,010) | - |
| 402 | | 921 | Stores / Purchasing Load | 138 | 138 | - | 138 |
| 403 | **Total 972 - Corp Alloc - Building Masthead** | | | **(231,358)** | **(231,358)** | **673,857** | **442,499** |
| 404 | | | | | | | |

| | A | B | C | D | E | F | G |
|---|---|---|---|---|---|---|---|
| 1 | **Public Service Company of New Mexico** | | | | | | |
| 2 | **Schedule H-14** | | | | | | |
| 3 | **Expenses Associated with Affiliated Interests** | | | | | | |
| 4 | **Base Period Ending 6/30/2026** | | | | | | |
| 5 | **Test Period Ending 9/30/2028** | | | | | | |
| 6 | **This schedule is sponsored by PNM Witness Gutierrez** | | | | | | |
| 7 | | | | | | | |
| 8 | | | | | | | **Note 1** |
| 9 | **PNMR Loc No** | **Cost Type** | **Cost Type Description** | **Total Shared Services Base Period** | **Total Shared Services Charged to PNM Base Period** | **Base Period Adjustments** | **Total Adjusted Base** |
| 405 | 973 | 472 | Lease - Long Term | - | - | - | - |
| 406 | **Total 973 - Corp Alloc - Building-Lewisville** | | | **-** | **-** | **-** | **-** |
| 407 | | | | | | | |
| 408 | 974 | 150 | Paid Absence | 483 | 351 | (351) | - |
| 409 | | 151 | Vacation | - | - | 0 | 0 |
| 410 | | 153 | Holiday | - | - | - | - |
| 411 | | 472 | Lease - Long Term | - | - | - | - |
| 412 | | 473 | Lease - Short Term | 83,352 | 60,213 | (1,950) | 58,263 |
| 413 | | 610 | Expenses - General | - | - | - | - |
| 414 | | 875 | Tax-Property-NM Non-Leased | 301 | 213 | (213) | - |
| 415 | **Total 974 - Building - Dallas** | | | **84,135** | **60,777** | **(2,514)** | **58,263** |
| 416 | | | | | | | |
| 417 | 977 | 110 | Straight Time-General | 428,696 | 300,886 | 30,383 | 331,270 |
| 418 | | 120 | Overtime-General | 28,909 | 20,294 | 72 | 20,366 |
| 419 | | 150 | Paid Absence | 1,667 | 1,171 | (1,171) | - |
| 420 | | 151 | Vacation | - | - | 45,897 | 45,897 |
| 421 | | 153 | Holiday | - | - | (0) | (0) |
| 422 | | 200 | Fleet Vehicle Maint-Rental | - | - | - | - |
| 423 | | 204 | Fleet Maintenance Expense | 70,264 | 49,300 | 200 | 49,501 |
| 424 | | 325 | Freight | - | - | - | - |
| 425 | | 331 | Supplies and Equipment | 17,662 | 12,407 | 36 | 12,443 |
| 426 | | 370 | Outside Services | 1,827,283 | 1,281,997 | 5,324 | 1,287,321 |
| 427 | | 374 | Outside Svcs Legal | - | - | - | - |
| 428 | | 421 | Depreciation | 802,998 | 563,675 | (563,675) | - |
| 429 | | 427 | Interest Inc/Exp | (235) | (164) | (1) | (165) |
| 430 | | 429 | Computer Hardware | - | - | - | - |
| 431 | | 472 | Lease - Long Term | - | - | - | - |

| | A | B | C | D | E | F | G |
|---|---|---|---|---|---|---|---|
| 1 | **Public Service Company of New Mexico** | | | | | | |
| 2 | **Schedule H-14** | | | | | | |
| 3 | **Expenses Associated with Affiliated Interests** | | | | | | |
| 4 | **Base Period Ending 6/30/2026** | | | | | | |
| 5 | **Test Period Ending 9/30/2028** | | | | | | |
| 6 | **This schedule is sponsored by PNM Witness Gutierrez** | | | | | | |
| 7 | | | | | | | |
| 8 | | | | | | | **Note 1** |
| 9 | **PNMR Loc No** | **Cost Type** | **Cost Type Description** | **Total Shared Services Base Period** | **Total Shared Services Charged to PNM Base Period** | **Base Period Adjustments** | **Total Adjusted Base** |
| 432 | | 473 | Lease - Short Term | - | - | - | - |
| 433 | | 500 | Utility Payments | 90,819 | 63,748 | 234 | 63,982 |
| 434 | | 501 | Phones | 18,727 | 13,151 | 42 | 13,193 |
| 435 | | 530 | Employee Expense | 23,004 | 16,157 | (123) | 16,034 |
| 436 | | 550 | Meals | 971 | 682 | 2 | 684 |
| 437 | | 554 | Professional Dues | - | - | - | - |
| 438 | | 555 | Repro and Printing - Internal | 72 | 51 | 0 | 51 |
| 439 | | 560 | Dues Fees Fines | 704 | 492 | 4 | 496 |
| 440 | | 610 | Expenses - General | - | - | - | - |
| 441 | | 770 | Revenue-General | (103,747) | (72,684) | 72,684 | - |
| 442 | | 875 | Tax-Property-NM Non-Leased | 136,407 | 95,707 | (95,707) | - |
| 443 | | 911 | Time Off Allowances | 65,033 | 45,644 | (45,644) | - |
| 444 | | 921 | Stores / Purchasing Load | 5,199 | 3,650 | 13 | 3,663 |
| 445 | **Total 977 - Building - Albq - Downtown** | | | **3,414,434** | **2,396,164** | **(551,430)** | **1,844,734** |
| 446 | | | | | | | |

| | A | B | C | D | E | F | G |
|---|---|---|---|---|---|---|---|
| 1 | **Public Service Company of New Mexico** | | | | | | |
| 2 | **Schedule H-14** | | | | | | |
| 3 | **Expenses Associated with Affiliated Interests** | | | | | | |
| 4 | **Base Period Ending 6/30/2026** | | | | | | |
| 5 | **Test Period Ending 9/30/2028** | | | | | | |
| 6 | **This schedule is sponsored by PNM Witness Gutierrez** | | | | | | |
| 7 | | | | | | | |
| 8 | | | | | | | **Note 1** |
| 9 | **PNMR Loc No** | **Cost Type** | **Cost Type Description** | **Total Shared Services Base Period** | **Total Shared Services Charged to PNM Base Period** | **Base Period Adjustments** | **Total Adjusted Base** |
| 447 | 980 | 110 | Straight Time-General | 70,540 | 66,764 | (18,083) | 48,681 |
| 448 | | 120 | Overtime-General | 11,534 | 10,917 | 4 | 10,921 |
| 449 | | 151 | Vacation | - | - | - | - |
| 450 | | 331 | Supplies and Equipment | 7,044 | 6,666 | 3 | 6,670 |
| 451 | | 370 | Outside Services | 675,643 | 639,499 | 200 | 639,699 |
| 452 | | 500 | Utility Payments | 45,945 | 43,487 | 14 | 43,501 |
| 453 | | 530 | Employee Expense | 546 | 516 | 0 | 516 |
| 454 | | 550 | Meals | 105 | 99 | 0 | 99 |
| 455 | | 555 | Repro and Printing - Internal | 50 | 47 | 0 | 47 |
| 456 | | 560 | Dues Fees Fines | 2,555 | 2,418 | 2 | 2,419 |
| 457 | | 600 | Incentive Compensation | 27,478 | 26,012 | (26,012) | - |
| 458 | | 911 | Time Off Allowances | 10,701 | 10,128 | (10,128) | - |
| 459 | | 921 | Stores / Purchasing Load | 1,880 | 1,779 | 1 | 1,780 |
| 460 | **Total 980 - Building - Albq - Aztec** | | | **854,021** | **808,332** | **(54,000)** | **754,332** |
| 461 | | | | | | | |
| 462 | 986 | 110 | Straight Time-General | 176,734 | 108,882 | (4,592) | 104,290 |
| 463 | | 140 | Misc Pay Pension Eligible | - | - | - | - |
| 464 | | 150 | Paid Absence | 10,201 | 6,275 | 2,129 | 8,404 |
| 465 | | 151 | Vacation | - | - | 0 | 0 |
| 466 | | 153 | Holiday | - | - | - | - |
| 467 | | 370 | Outside Services | - | - | - | - |
| 468 | | 406 | Computer Maintenance | 550,541 | 339,555 | 1,009 | 340,565 |
| 469 | | 421 | Depreciation | 4,211,412 | 2,593,638 | (2,593,638) | - |
| 470 | | 422 | Amortization | - | - | - | - |
| 471 | | 530 | Employee Expense | 5,415 | 3,330 | 20 | 3,350 |
| 472 | | 550 | Meals | 519 | 318 | 3 | 321 |
| 473 | | 610 | Expenses - General | - | - | - | - |

| | A | B | C | D | E | F | G |
|---|---|---|---|---|---|---|---|
| 1 | **Public Service Company of New Mexico** | | | | | | |
| 2 | **Schedule H-14** | | | | | | |
| 3 | **Expenses Associated with Affiliated Interests** | | | | | | |
| 4 | **Base Period Ending 6/30/2026** | | | | | | |
| 5 | **Test Period Ending 9/30/2028** | | | | | | |
| 6 | **This schedule is sponsored by PNM Witness Gutierrez** | | | | | | |
| 7 | | | | | | | |
| 8 | | | | | | | **Note 1** |
| 9 | **PNMR Loc No** | **Cost Type** | **Cost Type Description** | **Total Shared Services Base Period** | **Total Shared Services Charged to PNM Base Period** | **Base Period Adjustments** | **Total Adjusted Base** |
| 474 | | 911 | Time Off Allowances | 26,810 | 16,517 | (16,517) | - |
| 475 | | 921 | Stores / Purchasing Load | - | - | - | - |
| 476 | **Total 986 - Corp Alloc - MMS-Maximo** | | | **4,981,632** | **3,068,516** | **(2,611,586)** | **456,930** |
| 477 | | | | | | | |
| 478 | 992 | 324 | Postage Expenses | - | - | - | - |
| 479 | **Total 992** | | | **-** | **-** | **-** | **-** |
| 480 | | | | | | | |
| 481 | 993 | 110 | Straight Time-General | 4,251,437 | 2,948,771 | (35,775) | 2,912,996 |
| 482 | | 120 | Overtime-General | 1,236 | 856 | (5) | 851 |
| 483 | | 140 | Misc Pay Pension Eligible | - | - | - | - |
| 484 | | 150 | Paid Absence | 38,475 | 26,656 | 4,006 | 30,662 |
| 485 | | 151 | Vacation | - | - | 324,838 | 324,838 |
| 486 | | 152 | Illness | 91,521 | 63,391 | 5,585 | 68,976 |
| 487 | | 153 | Holiday | - | - | 0 | 0 |
| 488 | | 324 | Postage Expenses | 1,005 | 702 | (10) | 692 |
| 489 | | 325 | Freight | - | - | - | - |
| 490 | | 331 | Supplies and Equipment | 12,929 | 9,012 | (109) | 8,903 |
| 491 | | 332 | Subscriptions & Renewals | 978 | 674 | (1) | 673 |
| 492 | | 370 | Outside Services | 1,591,335 | 1,104,831 | (50,353) | 1,054,477 |
| 493 | | 374 | Outside Svcs Legal | 322,215 | 222,511 | (634) | 221,877 |
| 494 | | 377 | Outside Services-Temp Labor | - | - | - | - |
| 495 | | 406 | Computer Maintenance | 42,869 | 29,711 | (192) | 29,519 |
| 496 | | 428 | Computer Software | - | - | - | - |
| 497 | | 429 | Computer Hardware | 85 | 59 | (1) | 59 |

| | A | B | C | D | E | F | G |
|---|---|---|---|---|---|---|---|
| 1 | **Public Service Company of New Mexico** | | | | | | |
| 2 | **Schedule H-14** | | | | | | |
| 3 | **Expenses Associated with Affiliated Interests** | | | | | | |
| 4 | **Base Period Ending 6/30/2026** | | | | | | |
| 5 | **Test Period Ending 9/30/2028** | | | | | | |
| 6 | **This schedule is sponsored by PNM Witness Gutierrez** | | | | | | |
| 7 | | | | | | | |
| 8 | | | | | | | **Note 1** |
| 9 | **PNMR Loc No** | **Cost Type** | **Cost Type Description** | **Total Shared Services Base Period** | **Total Shared Services Charged to PNM Base Period** | **Base Period Adjustments** | **Total Adjusted Base** |
| 498 | | 450 | Insurance Premiums | 13,655,015 | 9,471,667 | (68,824) | 9,402,843 |
| 499 | | 490 | Tax-General | - | - | - | - |
| 500 | | 501 | Phones | 9,173 | 6,361 | (44) | 6,316 |
| 501 | | 522 | Damages - Payment | (9,123) | (6,328) | 46 | (6,282) |
| 502 | | 525 | Damages - General | (72) | (50) | 1 | (49) |
| 503 | | 530 | Employee Expense | 260,525 | 180,866 | (3,769) | 177,097 |
| 504 | | 550 | Meals | 46,843 | 32,625 | (369) | 32,256 |
| 505 | | 554 | Professional Dues | 364 | 254 | (4) | 251 |
| 506 | | 555 | Repro and Printing - Internal | 53,369 | 37,018 | (268) | 36,750 |
| 507 | | 560 | Dues Fees Fines | 9,518 | 6,650 | (96) | 6,554 |
| 508 | | 600 | Incentive Compensation | 54,005 | 37,478 | (291) | 37,188 |
| 509 | | 610 | Expenses - General | 210,135 | 145,850 | (1,152) | 144,699 |
| 510 | | 883 | Tax-FICA | 3,911,813 | 2,711,521 | (2,711,521) | - |
| 511 | | 884 | Tax-FUTA | 21,092 | 14,534 | (14,534) | - |
| 512 | | 885 | Tax-SUTA | 52,837 | 36,413 | (36,413) | - |
| 513 | | 911 | Time Off Allowances | 560,284 | 388,211 | (388,211) | - |
| 514 | | 913 | Payroll Taxes Load | (378,792) | (262,665) | 262,665 | - |
| 515 | | 914 | Pension and Benefits Load | (1,030,621) | (714,646) | 4,961 | (709,685) |
| 516 | | 915 | Injuries and Damages Load | (99,259) | (68,854) | 504 | (68,350) |
| 517 | | 921 | Stores / Purchasing Load | 5,085 | 3,530 | (153) | 3,377 |
| 518 | **Total 993 - Employee Headcount** | | | **23,686,276** | **16,427,608** | **(2,710,120)** | **13,717,488** |

| | A | B | C | D | E | F | G |
|---|---|---|---|---|---|---|---|
| 1 | **Public Service Company of New Mexico** | | | | | | |
| 2 | **Schedule H-14** | | | | | | |
| 3 | **Expenses Associated with Affiliated Interests** | | | | | | |
| 4 | **Base Period Ending 6/30/2026** | | | | | | |
| 5 | **Test Period Ending 9/30/2028** | | | | | | |
| 6 | **This schedule is sponsored by PNM Witness Gutierrez** | | | | | | |
| 7 | | | | | | | |
| 8 | | | | | | | **Note 1** |
| 9 | **PNMR Loc No** | **Cost Type** | **Cost Type Description** | **Total Shared Services Base Period** | **Total Shared Services Charged to PNM Base Period** | **Base Period Adjustments** | **Total Adjusted Base** |
| 519 | | | | | | | |
| 520 | 999 | 110 | Straight Time-General | 52,578 | - | - | - |
| 521 | | 120 | Overtime-General | 208 | - | - | - |
| 522 | | 140 | Misc Pay Pension Eligible | - | - | - | - |
| 523 | | 150 | Paid Absence | 1,131 | - | - | - |
| 524 | | 151 | Vacation | - | - | - | - |
| 525 | | 153 | Holiday | - | - | - | - |
| 526 | | 324 | Postage Expenses | 124 | - | - | - |
| 527 | | 325 | Freight | - | - | - | - |
| 528 | | 331 | Supplies and Equipment | 392 | - | - | - |
| 529 | | 332 | Subsciptions & Renewals | 34,481 | - | - | - |
| 530 | | 370 | Outside Services | 1,565,333 | - | - | - |
| 531 | | 374 | Outside Svcs Legal | (2,683,973) | - | - | - |
| 532 | | 377 | Outside Services-Temp Labor | 35,405 | - | - | - |
| 533 | | 421 | Depreciation | 86,094 | - | - | - |
| 534 | | 427 | Interest Inc/Exp | 281,926 | - | - | - |
| 535 | | 428 | Computer Software | 230 | - | - | - |
| 536 | | 429 | Computer Hardware | - | - | - | - |
| 537 | | 472 | Lease - Long Term | (1) | - | - | - |
| 538 | | 490 | Tax-General | 0 | - | - | - |
| 539 | | 501 | Phones | 1,852 | - | - | - |
| 540 | | 530 | Employee Expense | 386,596 | - | - | - |
| 541 | | 550 | Meals | 62,868 | - | - | - |
| 542 | | 554 | Professional Dues | 950 | - | - | - |

| | A | B | C | D | E | F | G |
|---|---|---|---|---|---|---|---|
| 1 | **Public Service Company of New Mexico** | | | | | | |
| 2 | **Schedule H-14** | | | | | | |
| 3 | **Expenses Associated with Affiliated Interests** | | | | | | |
| 4 | **Base Period Ending 6/30/2026** | | | | | | |
| 5 | **Test Period Ending 9/30/2028** | | | | | | |
| 6 | **This schedule is sponsored by PNM Witness Gutierrez** | | | | | | |
| 7 | | | | | | | |
| 8 | | | | | | | **Note 1** |
| 9 | **PNMR Loc No** | **Cost Type** | **Cost Type Description** | **Total Shared Services Base Period** | **Total Shared Services Charged to PNM Base Period** | **Base Period Adjustments** | **Total Adjusted Base** |
| 543 | | 555 | Repro and Printing - Internal | 2,044 | - | - | - |
| 544 | | 560 | Dues Fees Fines | 132,342 | - | - | - |
| 545 | | 600 | Incentive Compensation | 122,562 | - | - | - |
| 546 | | 610 | Expenses - General | (29,039) | - | - | - |
| 547 | | 622 | Contributions and Donations | 42,000 | - | - | - |
| 548 | | 874 | Tax-Other Than Income | - | - | - | - |
| 549 | | 882 | Tax-Compensating | - | - | - | - |
| 550 | | 883 | Tax-FICA | (304) | - | - | - |
| 551 | | 889 | Tax-Federal Excise | (0) | - | - | - |
| 552 | | 911 | Time Off Allowances | 7,976 | - | - | - |
| 553 | | 921 | Stores / Purchasing Load | 4,082 | - | - | - |
| 554 | **Total 999 - Corporate Unallocated** | | | **107,858** | **-** | **-** | **-** |
| 555 | | | | | | | |
| 556 | | | | 186,442,554 | 131,732,728 | (55,582,808) | 76,149,920 |
| 557 | | | | | | | |
| 558 | **Charges from Public Service Company of New Mexico to:** | | | | | | |
| 559 | TNMP - Call Center Services | | | (280,080) | (280,080) | 280,080 | - |
| 560 | | | | (280,080) | (280,080) | 280,080 | - |

| | A | B | C | H | I | J | K |
|---|---|---|---|---|---|---|---|
| 1 | **Public Service Company of New Mexico** | | | | | | |
| 2 | **Schedule H-14** | | | | | | |
| 3 | **Expenses Associated with Affiliated Interests** | | | | | | |
| 4 | **Base Period Ending 6/30/2026** | | | | | | |
| 5 | **Test Period Ending 9/30/2028** | | | | | | |
| 6 | **This schedule is sponsored by PNM Witness Gutierrez** | | | | | | |
| 7 | | | | | | | |
| 8 | | | | **Note 2** | **Note 3** | **Note 4** | |
| 9 | **PNMR Loc No** | **Cost Type** | **Cost Type Description** | **Linkage 1 Jul-26 - Jun-27** | **Linkage 2 Oct-26 - Sep-27** | **Test Period Oct-27 - Sep-28** | **Reference** |
| 10 | 911 | 110 | Straight Time-General | 1,689,706 | 1,706,436 | 1,774,693 | |
| 11 | | 120 | Overtime-General | 2,488 | 2,513 | 2,613 | |
| 12 | | 140 | Misc Pay Pension Eligible | 19,925 | 20,123 | 20,927 | |
| 13 | | 150 | Paid Absence | 4,894 | 4,942 | 5,140 | |
| 14 | | 151 | Vacation | 369,167 | 372,822 | 387,735 | |
| 15 | | 152 | Illness | - | - | - | |
| 16 | | 153 | Holiday | (0) | (0) | (0) | |
| 17 | | 324 | Postage Expenses | 3,387 | 3,387 | 3,489 | |
| 18 | | 331 | Supplies and Equipment | 3,071 | 3,071 | 3,163 | |
| 19 | | 370 | Outside Services | 1,772,335 | 1,772,335 | 1,825,505 | |
| 20 | | 374 | Outside Svcs Legal | - | - | - | |
| 21 | | 406 | Computer Maintenance | 904,809 | 904,809 | 931,953 | |
| 22 | | 421 | Depreciation | - | - | - | |
| 23 | | 422 | Amortization | - | - | - | |
| 24 | | 428 | Computer Software | 3,825 | 3,825 | 3,940 | |
| 25 | | 429 | Computer Hardware | - | - | - | |
| 26 | | 501 | Phones | 4,883 | 4,883 | 5,030 | |
| 27 | | 530 | Employee Expense | 13,063 | 13,063 | 13,455 | |
| 28 | | 550 | Meals | 2,814 | 2,814 | 2,898 | |
| 29 | | 554 | Professional Dues | 90 | 90 | 93 | |
| 30 | | 555 | Repro and Printing - Internal | 401 | 401 | 413 | |
| 31 | | 560 | Dues Fees Fines | 42,164 | 42,164 | 43,428 | |
| 32 | | 600 | Incentive Compensation | - | - | - | |
| 33 | | 911 | Time Off Allowances | - | - | - | |
| 34 | | 921 | Stores / Purchasing Load | 930 | 930 | 958 | |
| 35 | **Total 911 - Financial Systems** | | | **4,837,952** | **4,858,607** | **5,025,434** | |
| 36 | | | | | | | |

| | A | B | C | H | I | J | K |
|---|---|---|---|---|---|---|---|
| 1 | **Public Service Company of New Mexico** | | | | | | |
| 2 | **Schedule H-14** | | | | | | |
| 3 | **Expenses Associated with Affiliated Interests** | | | | | | |
| 4 | **Base Period Ending 6/30/2026** | | | | | | |
| 5 | **Test Period Ending 9/30/2028** | | | | | | |
| 6 | **This schedule is sponsored by PNM Witness Gutierrez** | | | | | | |
| 7 | | | | | | | |
| 8 | | | | **Note 2** | **Note 3** | **Note 4** | |
| 9 | **PNMR Loc No** | **Cost Type** | **Cost Type Description** | **Linkage 1 Jul-26 - Jun-27** | **Linkage 2 Oct-26 - Sep-27** | **Test Period Oct-27 - Sep-28** | **Reference** |
| 37 | 912 | 110 | Straight Time-General | 228,493 | 230,755 | 239,985 | |
| 38 | | 120 | Overtime-General | 2,524 | 2,549 | 2,651 | |
| 39 | | 140 | Misc Pay Pension Eligible | - | - | - | |
| 40 | | 150 | Paid Absence | - | - | - | |
| 41 | | 151 | Vacation | 37,846 | 38,221 | 39,750 | |
| 42 | | 152 | Illness | - | - | - | |
| 43 | | 153 | Holiday | 0 | 0 | 0 | |
| 44 | | 331 | Supplies and Equipment | 4,300 | 4,300 | 4,429 | |
| 45 | | 377 | Outside Services-Temp Labor | - | - | - | |
| 46 | | 501 | Phones | 519 | 519 | 535 | |
| 47 | | 530 | Employee Expense | 40 | 40 | 41 | |
| 48 | | 550 | Meals | - | - | - | |
| 49 | | 555 | Repro and Printing - Internal | - | - | - | |
| 50 | | 911 | Time Off Allowances | - | - | - | |
| 51 | | 921 | Stores / Purchasing Load | 12 | 12 | 12 | |
| 52 | **Total 912 - Accounts Payable** | | | **273,734** | **276,396** | **287,404** | |
| 53 | | | | | | | |

| | A | B | C | H | I | J | K |
|---|---|---|---|---|---|---|---|
| 1 | **Public Service Company of New Mexico** | | | | | | |
| 2 | **Schedule H-14** | | | | | | |
| 3 | **Expenses Associated with Affiliated Interests** | | | | | | |
| 4 | **Base Period Ending 6/30/2026** | | | | | | |
| 5 | **Test Period Ending 9/30/2028** | | | | | | |
| 6 | **This schedule is sponsored by PNM Witness Gutierrez** | | | | | | |
| 7 | | | | | | | |
| 8 | | | | **Note 2** | **Note 3** | **Note 4** | |
| 9 | **PNMR Loc No** | **Cost Type** | **Cost Type Description** | **Linkage 1 Jul-26 - Jun-27** | **Linkage 2 Oct-26 - Sep-27** | **Test Period Oct-27 - Sep-28** | **Reference** |
| 54 | 914 | 110 | Straight Time-General | 403,629 | 407,625 | 423,930 | |
| 55 | | 150 | Paid Absence | - | - | - | |
| 56 | | 151 | Vacation | 40,855 | 41,260 | 42,910 | |
| 57 | | 153 | Holiday | (0) | (0) | (0) | |
| 58 | | 332 | Subsciptions & Renewals | 204 | 204 | 210 | |
| 59 | | 370 | Outside Services | - | - | - | |
| 60 | | 421 | Depreciation | - | - | - | |
| 61 | | 422 | Amortization | - | - | - | |
| 62 | | 530 | Employee Expense | - | - | - | |
| 63 | | 550 | Meals | - | - | - | |
| 64 | | 911 | Time Off Allowances | - | - | - | |
| 65 | | 921 | Stores / Purchasing Load | - | - | - | |
| 66 | **Total 914 - Asset Management** | | | **444,687** | **449,088** | **467,050** | |
| 67 | | | | | | | |
| 68 | 917 | 110 | Straight Time-General | - | - | - | |
| 69 | | 150 | Paid Absence | - | - | - | |
| 70 | | 370 | Outside Services | - | - | - | |
| 71 | | 450 | Insurance Premiums | - | - | - | |
| 72 | | 600 | Incentive Compensation | - | - | - | |
| 73 | | 883 | Tax-FICA | - | - | - | |
| 74 | | 911 | Time Off Allowances | - | - | - | |
| 75 | **Total 917 - Corp Alloc 100pct PNMR DM** | | | **-** | **-** | **-** | |
| 76 | | | | | | | |

| | A | B | C | H | I | J | K |
|---|---|---|---|---|---|---|---|
| 1 | **Public Service Company of New Mexico** | | | | | | |
| 2 | **Schedule H-14** | | | | | | |
| 3 | **Expenses Associated with Affiliated Interests** | | | | | | |
| 4 | **Base Period Ending 6/30/2026** | | | | | | |
| 5 | **Test Period Ending 9/30/2028** | | | | | | |
| 6 | **This schedule is sponsored by PNM Witness Gutierrez** | | | | | | |
| 7 | | | | | | | |
| 8 | | | | **Note 2** | **Note 3** | **Note 4** | |
| 9 | **PNMR Loc No** | **Cost Type** | **Cost Type Description** | **Linkage 1 Jul-26 - Jun-27** | **Linkage 2 Oct-26 - Sep-27** | **Test Period Oct-27 - Sep-28** | **Reference** |
| 77 | 941 | 110 | Straight Time-General | 6,903,656 | 6,972,009 | 7,250,889 | |
| 78 | | 120 | Overtime-General | 57,028 | 57,593 | 59,896 | |
| 79 | | 140 | Misc Pay Pension Eligible | 90,658 | 91,556 | 95,218 | |
| 80 | | 150 | Paid Absence | 45,964 | 46,419 | 48,276 | |
| 81 | | 151 | Vacation | 823,834 | 831,991 | 865,271 | |
| 82 | | 152 | Illness | 31,175 | 31,484 | 32,743 | |
| 83 | | 153 | Holiday | 0 | 0 | 0 | |
| 84 | | 200 | Fleet Vehicle Maint-Rental | - | - | - | |
| 85 | | 204 | Fleet Maintenance Expense | 14,166 | 14,166 | 14,591 | |
| 86 | | 205 | Fleet Fuel Expense | - | - | - | |
| 87 | | 324 | Postage Expenses | 32,806 | 32,806 | 33,790 | |
| 88 | | 325 | Freight | 49,566 | 49,566 | 51,053 | |
| 89 | | 331 | Supplies and Equipment | 62,952 | 62,952 | 64,840 | |
| 90 | | 332 | Subsciptions & Renewals | (141) | (141) | (145) | |
| 91 | | 359 | Non-Stock Materials | 3,020 | 3,020 | 3,110 | |
| 92 | | 370 | Outside Services | 1,709,391 | 1,709,391 | 1,760,673 | |
| 93 | | 374 | Outside Svcs Legal | 342,399 | 342,399 | 352,671 | |
| 94 | | 377 | Outside Services-Temp Labor | 63,646 | 63,646 | 65,555 | |
| 95 | | 406 | Computer Maintenance | 143,307 | 143,307 | 147,606 | |
| 96 | | 421 | Depreciation | - | - | - | |
| 97 | | 422 | Amortization | - | - | - | |
| 98 | | 426 | Capitalized Interest | (893,970) | (893,970) | (920,789) | |
| 99 | | 428 | Computer Software | 86,227 | 86,227 | 88,813 | |
| 100 | | 429 | Computer Hardware | 3,105 | 3,105 | 3,199 | |
| 101 | | 450 | Insurance Premiums | 2,523,469 | 2,523,469 | 2,599,174 | |
| 102 | | 473 | Lease - Short Term | - | - | - | |
| 103 | | 501 | Phones | 20,042 | 20,042 | 20,643 | |

| | A | B | C | H | I | J | K |
|---|---|---|---|---|---|---|---|
| 1 | **Public Service Company of New Mexico** | | | | | | |
| 2 | **Schedule H-14** | | | | | | |
| 3 | **Expenses Associated with Affiliated Interests** | | | | | | |
| 4 | **Base Period Ending 6/30/2026** | | | | | | |
| 5 | **Test Period Ending 9/30/2028** | | | | | | |
| 6 | **This schedule is sponsored by PNM Witness Gutierrez** | | | | | | |
| 7 | | | | | | | |
| 8 | | | | **Note 2** | **Note 3** | **Note 4** | |
| 9 | **PNMR Loc No** | **Cost Type** | **Cost Type Description** | **Linkage 1 Jul-26 - Jun-27** | **Linkage 2 Oct-26 - Sep-27** | **Test Period Oct-27 - Sep-28** | **Reference** |
| 104 | | 522 | Damages - Payment | 8,604 | 8,604 | 8,862 | |
| 105 | | 525 | Damages - General | - | - | - | |
| 106 | | 530 | Employee Expense | 239,000 | 239,000 | 246,170 | |
| 107 | | 550 | Meals | 46,814 | 46,814 | 48,219 | |
| 108 | | 554 | Professional Dues | 17,180 | 17,180 | 17,695 | |
| 109 | | 555 | Repro and Printing - Internal | 8,824 | 8,824 | 9,088 | |
| 110 | | 560 | Dues Fees Fines | 526,420 | 526,420 | 542,213 | |
| 111 | | 600 | Incentive Compensation | - | - | - | |
| 112 | | 610 | Expenses - General | 2,053 | 2,053 | 2,114 | |
| 113 | | 622 | Contributions and Donations | - | - | - | |
| 114 | | 875 | Tax-Property-NM Non-Leased | - | - | - | |
| 115 | | 880 | Tax-Gross Receipts | - | - | - | |
| 116 | | 882 | Tax-Compensating | (120) | (120) | (123) | |
| 117 | | 883 | Tax-FICA | - | - | - | |
| 118 | | 889 | Tax-Federal Excise | 263,823 | 263,823 | 271,737 | |
| 119 | | 911 | Time Off Allowances | - | - | - | |
| 120 | | 913 | Payroll Taxes Load | - | - | - | |
| 121 | | 914 | Pension and Benefits Load | - | - | - | |
| 122 | | 915 | Injuries and Damages Load | - | - | - | |
| 123 | | 921 | Stores / Purchasing Load | 5,822 | 5,822 | 5,997 | |
| 124 | **Total 941 - Direct PNMR Utility** | | | **13,230,721** | **13,309,456** | **13,789,051** | |
| 125 | | | | | | | |

| | A | B | C | H | I | J | K |
|---|---|---|---|---|---|---|---|
| 1 | **Public Service Company of New Mexico** | | | | | | |
| 2 | **Schedule H-14** | | | | | | |
| 3 | **Expenses Associated with Affiliated Interests** | | | | | | |
| 4 | **Base Period Ending 6/30/2026** | | | | | | |
| 5 | **Test Period Ending 9/30/2028** | | | | | | |
| 6 | **This schedule is sponsored by PNM Witness Gutierrez** | | | | | | |
| 7 | | | | | | | |
| 8 | | | | **Note 2** | **Note 3** | **Note 4** | |
| 9 | **PNMR Loc No** | **Cost Type** | **Cost Type Description** | **Linkage 1 Jul-26 - Jun-27** | **Linkage 2 Oct-26 - Sep-27** | **Test Period Oct-27 - Sep-28** | **Reference** |
| 126 | 942 | 110 | Straight Time-General | 1,520,543 | 1,535,598 | 1,597,022 | |
| 127 | | 120 | Overtime-General | 13,341 | 13,473 | 14,012 | |
| 128 | | 150 | Paid Absence | 2,426 | 2,450 | 2,548 | |
| 129 | | 151 | Vacation | 117,549 | 118,713 | 123,461 | |
| 130 | | 152 | Illness | - | - | - | |
| 131 | | 153 | Holiday | 0 | 0 | 0 | |
| 132 | | 200 | Fleet Vehicle Maint-Rental | - | - | - | |
| 133 | | 204 | Fleet Maintenance Expense | 78,428 | 78,428 | 80,781 | |
| 134 | | 205 | Fleet Fuel Expense | - | - | - | |
| 135 | | 331 | Supplies and Equipment | 19,033 | 19,033 | 19,604 | |
| 136 | | 370 | Outside Services | 3,403,170 | 3,403,170 | 3,505,265 | |
| 137 | | 374 | Outside Svcs Legal | 70,687 | 70,687 | 72,808 | |
| 138 | | 377 | Outside Services-Temp Labor | - | - | - | |
| 139 | | 406 | Computer Maintenance | 41,010 | 41,010 | 42,241 | |
| 140 | | 421 | Depreciation | - | - | - | |
| 141 | | 426 | Capitalized Interest | - | - | - | |
| 142 | | 427 | Interest Inc/Exp | (5,611) | (5,611) | (5,780) | |

| | A | B | C | H | I | J | K |
|---|---|---|---|---|---|---|---|
| 1 | **Public Service Company of New Mexico** | | | | | | |
| 2 | **Schedule H-14** | | | | | | |
| 3 | **Expenses Associated with Affiliated Interests** | | | | | | |
| 4 | **Base Period Ending 6/30/2026** | | | | | | |
| 5 | **Test Period Ending 9/30/2028** | | | | | | |
| 6 | **This schedule is sponsored by PNM Witness Gutierrez** | | | | | | |
| 7 | | | | | | | |
| 8 | | | | **Note 2** | **Note 3** | **Note 4** | |
| 9 | **PNMR Loc No** | **Cost Type** | **Cost Type Description** | **Linkage 1 Jul-26 - Jun-27** | **Linkage 2 Oct-26 - Sep-27** | **Test Period Oct-27 - Sep-28** | **Reference** |
| 143 | | 428 | Computer Software | 23,024 | 23,024 | 23,715 | |
| 144 | | 429 | Computer Hardware | - | - | - | |
| 145 | | 450 | Insurance Premiums | 817,787 | 817,787 | 842,320 | |
| 146 | | 473 | Lease - Short Term | - | - | - | |
| 147 | | 500 | Utility Payments | 63,400 | 63,400 | 65,302 | |
| 148 | | 501 | Phones | 1,228,403 | 1,228,403 | 1,265,255 | |
| 149 | | 530 | Employee Expense | (95,003) | (95,003) | (97,853) | |
| 150 | | 550 | Meals | 11,335 | 11,335 | 11,675 | |
| 151 | | 555 | Repro and Printing - Internal | 19,350 | 19,350 | 19,930 | |
| 152 | | 560 | Dues Fees Fines | 4,732 | 4,732 | 4,874 | |
| 153 | | 600 | Incentive Compensation | 1,597,463 | 1,628,785 | 3,498,825 | |
| 154 | | 610 | Expenses - General | 1,659 | 1,659 | 1,709 | |
| 155 | | 622 | Contributions and Donations | - | - | - | |
| 156 | | 883 | Tax-FICA | - | - | - | |
| 157 | | 911 | Time Off Allowances | 0 | 0 | 0 | |
| 158 | | 921 | Stores / Purchasing Load | 10,018 | 10,018 | 10,319 | |
| 159 | **Total 942 - Direct PNM Electric Services** | | | **8,942,744** | **8,990,441** | **11,098,033** | |
| 160 | | | | | | | |

| | A | B | C | H | I | J | K |
|---|---|---|---|---|---|---|---|
| 1 | **Public Service Company of New Mexico** | | | | | | |
| 2 | **Schedule H-14** | | | | | | |
| 3 | **Expenses Associated with Affiliated Interests** | | | | | | |
| 4 | **Base Period Ending 6/30/2026** | | | | | | |
| 5 | **Test Period Ending 9/30/2028** | | | | | | |
| 6 | **This schedule is sponsored by PNM Witness Gutierrez** | | | | | | |
| 7 | | | | | | | |
| 8 | | | | **Note 2** | **Note 3** | **Note 4** | |
| 9 | **PNMR Loc No** | **Cost Type** | **Cost Type Description** | **Linkage 1 Jul-26 - Jun-27** | **Linkage 2 Oct-26 - Sep-27** | **Test Period Oct-27 - Sep-28** | **Reference** |
| 161 | 946 | 110 | Straight Time-General | 1,646,417 | 1,662,719 | 1,729,227 | |
| 162 | | 120 | Overtime-General | - | - | - | |
| 163 | | 140 | Misc Pay Pension Eligible | 10,100 | 10,200 | 10,608 | |
| 164 | | 150 | Paid Absence | 3,866 | 3,904 | 4,060 | |
| 165 | | 151 | Vacation | 294,319 | 297,233 | 309,122 | |
| 166 | | 153 | Holiday | - | - | - | |
| 167 | | 200 | Fleet Vehicle Maint-Rental | - | - | - | |
| 168 | | 204 | Fleet Maintenance Expense | 28,804 | 28,804 | 29,668 | |
| 169 | | 331 | Supplies and Equipment | 122 | 122 | 126 | |
| 170 | | 370 | Outside Services | 453,976 | 453,976 | 467,595 | |
| 171 | | 374 | Outside Svcs Legal | 9,678 | 9,678 | 9,968 | |
| 172 | | 429 | Computer Hardware | 1,059 | 1,059 | 1,091 | |
| 173 | | 450 | Insurance Premiums | 179,963 | 179,963 | 185,361 | |
| 174 | | 501 | Phones | 5,114 | 5,114 | 5,268 | |
| 175 | | 530 | Employee Expense | 5,883 | 5,883 | 6,060 | |
| 176 | | 550 | Meals | 5,121 | 5,121 | 5,275 | |
| 177 | | 560 | Dues Fees Fines | - | - | - | |
| 178 | | 600 | Incentive Compensation | 938,099 | 956,493 | 2,054,661 | |
| 179 | | 883 | Tax-FICA | - | - | - | |
| 180 | | 911 | Time Off Allowances | - | - | - | |
| 181 | | 921 | Stores / Purchasing Load | 2,010 | 2,010 | 2,070 | |
| 182 | **Total 946 - Direct Bulk Generation** | | | **3,584,530** | **3,622,278** | **4,820,160** | |
| 183 | | | | | | | |

| | A | B | C | H | I | J | K |
|---|---|---|---|---|---|---|---|
| 1 | **Public Service Company of New Mexico** | | | | | | |
| 2 | **Schedule H-14** | | | | | | |
| 3 | **Expenses Associated with Affiliated Interests** | | | | | | |
| 4 | **Base Period Ending 6/30/2026** | | | | | | |
| 5 | **Test Period Ending 9/30/2028** | | | | | | |
| 6 | **This schedule is sponsored by PNM Witness Gutierrez** | | | | | | |
| 7 | | | | | | | |
| 8 | | | | **Note 2** | **Note 3** | **Note 4** | |
| 9 | **PNMR Loc No** | **Cost Type** | **Cost Type Description** | **Linkage 1 Jul-26 - Jun-27** | **Linkage 2 Oct-26 - Sep-27** | **Test Period Oct-27 - Sep-28** | **Reference** |
| 184 | 947 | 110 | Straight Time-General | 752,509 | 759,959 | 790,358 | |
| 185 | | 120 | Overtime-General | 4,752 | 4,799 | 4,991 | |
| 186 | | 150 | Paid Absence | - | - | - | |
| 187 | | 151 | Vacation | 117,010 | 118,169 | 122,896 | |
| 188 | | 152 | Illness | - | - | - | |
| 189 | | 153 | Holiday | 0 | 0 | 0 | |
| 190 | | 200 | Fleet Vehicle Maint-Rental | 0 | 0 | 0 | |
| 191 | | 204 | Fleet Maintenance Expense | 56 | 56 | 58 | |
| 192 | | 205 | Fleet Fuel Expense | - | - | - | |
| 193 | | 331 | Supplies and Equipment | 4,343 | 4,343 | 4,474 | |
| 194 | | 332 | Subscriptions & Renewals | 1,280 | 1,280 | 1,319 | |
| 195 | | 359 | Non-Stock Materials | - | - | - | |
| 196 | | 370 | Outside Services | 489,961 | 489,961 | 504,660 | |
| 197 | | 374 | Outside Svcs Legal | 2,474 | 2,474 | 2,549 | |
| 198 | | 406 | Computer Maintenance | - | - | - | |

| | A | B | C | H | I | J | K |
|---|---|---|---|---|---|---|---|
| 1 | **Public Service Company of New Mexico** | | | | | | |
| 2 | **Schedule H-14** | | | | | | |
| 3 | **Expenses Associated with Affiliated Interests** | | | | | | |
| 4 | **Base Period Ending 6/30/2026** | | | | | | |
| 5 | **Test Period Ending 9/30/2028** | | | | | | |
| 6 | **This schedule is sponsored by PNM Witness Gutierrez** | | | | | | |
| 7 | | | | | | | |
| 8 | | | | **Note 2** | **Note 3** | **Note 4** | |
| 9 | **PNMR Loc No** | **Cost Type** | **Cost Type Description** | **Linkage 1 Jul-26 - Jun-27** | **Linkage 2 Oct-26 - Sep-27** | **Test Period Oct-27 - Sep-28** | **Reference** |
| 199 | | 428 | Computer Software | 13,583 | 13,583 | 13,990 | |
| 200 | | 429 | Computer Hardware | 163 | 163 | 168 | |
| 201 | | 450 | Insurance Premiums | 165,026 | 165,026 | 169,977 | |
| 202 | | 500 | Utility Payments | 13,298 | 13,298 | 13,697 | |
| 203 | | 530 | Employee Expense | 93,985 | 93,985 | 96,804 | |
| 204 | | 550 | Meals | 19,294 | 19,294 | 19,873 | |
| 205 | | 555 | Repro and Printing - Internal | 4,466 | 4,466 | 4,600 | |
| 206 | | 560 | Dues Fees Fines | 1,499,409 | 1,499,409 | 1,544,391 | |
| 207 | | 600 | Incentive Compensation | 152,104 | 155,086 | 333,144 | |
| 208 | | 610 | Expenses - General | - | - | - | |
| 209 | | 883 | Tax-FICA | - | - | - | |
| 210 | | 911 | Time Off Allowances | - | - | - | |
| 211 | | 921 | Stores / Purchasing Load | 1,423 | 1,423 | 1,466 | |
| 212 | **Total 947 - Direct PNM Elec Transmission** | | | **3,335,137** | **3,346,775** | **3,629,413** | |
| 213 | | | | | | | |

| | A | B | C | H | I | J | K |
|---|---|---|---|---|---|---|---|
| 1 | **Public Service Company of New Mexico** | | | | | | |
| 2 | **Schedule H-14** | | | | | | |
| 3 | **Expenses Associated with Affiliated Interests** | | | | | | |
| 4 | **Base Period Ending 6/30/2026** | | | | | | |
| 5 | **Test Period Ending 9/30/2028** | | | | | | |
| 6 | **This schedule is sponsored by PNM Witness Gutierrez** | | | | | | |
| 7 | | | | | | | |
| 8 | | | | **Note 2** | **Note 3** | **Note 4** | |
| 9 | **PNMR Loc No** | **Cost Type** | **Cost Type Description** | **Linkage 1 Jul-26 - Jun-27** | **Linkage 2 Oct-26 - Sep-27** | **Test Period Oct-27 - Sep-28** | **Reference** |
| 214 | 948 | 110 | Straight Time-General | 452,131 | 456,607 | 474,872 | |
| 215 | | 150 | Paid Absence | 3,896 | 3,935 | 4,092 | |
| 216 | | 151 | Vacation | 65,385 | 66,032 | 68,673 | |
| 217 | | 152 | Illness | - | - | - | |
| 218 | | 153 | Holiday | 0 | 0 | 0 | |
| 219 | | 331 | Supplies and Equipment | 471 | 471 | 485 | |
| 220 | | 332 | Subsciptions & Renewals | 139 | 139 | 143 | |
| 221 | | 370 | Outside Services | 46,908 | 46,908 | 48,316 | |
| 222 | | 374 | Outside Svcs Legal | 450,299 | 450,299 | 463,808 | |
| 223 | | 421 | Depreciation | - | - | - | |
| 224 | | 422 | Amortization | - | - | - | |
| 225 | | 428 | Computer Software | 12,604 | 12,604 | 12,982 | |
| 226 | | 450 | Insurance Premiums | 45,123 | 45,123 | 46,477 | |
| 227 | | 473 | Lease - Short Term | - | - | - | |
| 228 | | 530 | Employee Expense | 14,290 | 14,290 | 14,719 | |
| 229 | | 550 | Meals | 1,469 | 1,469 | 1,514 | |
| 230 | | 555 | Repro and Printing - Internal | 136 | 136 | 140 | |
| 231 | | 911 | Time Off Allowances | - | - | - | |
| 232 | | 921 | Stores / Purchasing Load | 174 | 174 | 179 | |
| 233 | **Total 948 - Direct PNM Util T&D (woBulk, wo Texas)*** | | | **1,093,026** | **1,098,188** | **1,136,400** | |
| 234 | | | | | | | |

| | A | B | C | H | I | J | K |
|---|---|---|---|---|---|---|---|
| 1 | **Public Service Company of New Mexico** | | | | | | |
| 2 | **Schedule H-14** | | | | | | |
| 3 | **Expenses Associated with Affiliated Interests** | | | | | | |
| 4 | **Base Period Ending 6/30/2026** | | | | | | |
| 5 | **Test Period Ending 9/30/2028** | | | | | | |
| 6 | **This schedule is sponsored by PNM Witness Gutierrez** | | | | | | |
| 7 | | | | | | | |
| 8 | | | | **Note 2** | **Note 3** | **Note 4** | |
| 9 | **PNMR Loc No** | **Cost Type** | **Cost Type Description** | **Linkage 1 Jul-26 - Jun-27** | **Linkage 2 Oct-26 - Sep-27** | **Test Period Oct-27 - Sep-28** | **Reference** |
| 235 | 951 | 110 | Straight Time-General | 4,054,122 | 4,094,262 | 4,258,032 | |
| 236 | | 120 | Overtime-General | 2,550 | 2,576 | 2,679 | |
| 237 | | 140 | Misc Pay Pension Eligible | 1,934 | 1,954 | 2,032 | |
| 238 | | 150 | Paid Absence | 20,926 | 21,133 | 21,978 | |
| 239 | | 151 | Vacation | 277,390 | 280,137 | 291,342 | |
| 240 | | 152 | Illness | - | - | - | |
| 241 | | 153 | Holiday | 0 | 0 | 0 | |
| 242 | | 200 | Fleet Vehicle Maint-Rental | - | - | - | |
| 243 | | 204 | Fleet Maintenance Expense | 47,926 | 47,926 | 49,364 | |
| 244 | | 331 | Supplies and Equipment | 6,969 | 6,969 | 7,179 | |
| 245 | | 332 | Subsciptions & Renewals | 911 | 911 | 938 | |
| 246 | | 370 | Outside Services | 1,065,216 | 1,065,216 | 1,097,173 | |
| 247 | | 374 | Outside Svcs Legal | 38,812 | 38,812 | 39,976 | |
| 248 | | 377 | Outside Services-Temp Labor | 237,191 | 237,191 | 244,307 | |
| 249 | | 406 | Computer Maintenance | 147,190 | 147,190 | 151,606 | |
| 250 | | 421 | Depreciation | - | - | - | |
| 251 | | 422 | Amortization | - | - | - | |
| 252 | | 427 | Interest Inc/Exp | (2,646) | (2,646) | (2,725) | |
| 253 | | 428 | Computer Software | 75,248 | 75,248 | 77,505 | |
| 254 | | 429 | Computer Hardware | 1,870 | 1,870 | 1,927 | |
| 255 | | 450 | Insurance Premiums | - | - | - | |
| 256 | | 472 | Lease - Long Term | - | - | - | |
| 257 | | 473 | Lease - Short Term | 32,572 | 32,572 | 33,550 | |
| 258 | | 500 | Utility Payments | 1,402 | 1,402 | 1,444 | |

| | A | B | C | H | I | J | K |
|---|---|---|---|---|---|---|---|
| 1 | **Public Service Company of New Mexico** | | | | | | |
| 2 | **Schedule H-14** | | | | | | |
| 3 | **Expenses Associated with Affiliated Interests** | | | | | | |
| 4 | **Base Period Ending 6/30/2026** | | | | | | |
| 5 | **Test Period Ending 9/30/2028** | | | | | | |
| 6 | **This schedule is sponsored by PNM Witness Gutierrez** | | | | | | |
| 7 | | | | | | | |
| 8 | | | | **Note 2** | **Note 3** | **Note 4** | |
| 9 | **PNMR Loc No** | **Cost Type** | **Cost Type Description** | **Linkage 1 Jul-26 - Jun-27** | **Linkage 2 Oct-26 - Sep-27** | **Test Period Oct-27 - Sep-28** | **Reference** |
| 259 | | 501 | Phones | 8,925 | 8,925 | 9,193 | |
| 260 | | 530 | Employee Expense | 196,379 | 196,379 | 202,270 | |
| 261 | | 550 | Meals | 71,302 | 71,302 | 73,441 | |
| 262 | | 554 | Professional Dues | (1,207) | (1,207) | (1,244) | |
| 263 | | 555 | Repro and Printing - Internal | 21,356 | 21,356 | 21,997 | |
| 264 | | 560 | Dues Fees Fines | 405,493 | 405,493 | 417,658 | |
| 265 | | 600 | Incentive Compensation | - | - | - | |
| 266 | | 610 | Expenses - General | - | - | - | |
| 267 | | 622 | Contributions and Donations | - | - | - | |
| 268 | | 770 | Revenue-General | - | - | - | |
| 269 | | 911 | Time Off Allowances | 0 | 0 | 0 | |
| 270 | | 913 | Payroll Taxes Load | - | - | - | |
| 271 | | 914 | Pension and Benefits Load | - | - | - | |
| 272 | | 915 | Injuries and Damages Load | - | - | - | |
| 273 | | 921 | Stores / Purchasing Load | 5,457 | 5,457 | 5,621 | |
| 274 | **Total 951 - Direct PNM Util (w Bulk, wo Texas)** | | | **6,717,290** | **6,760,428** | **7,007,242** | |
| 275 | | | | | | | |

| | A | B | C | H | I | J | K |
|---|---|---|---|---|---|---|---|
| 1 | **Public Service Company of New Mexico** | | | | | | |
| 2 | **Schedule H-14** | | | | | | |
| 3 | **Expenses Associated with Affiliated Interests** | | | | | | |
| 4 | **Base Period Ending 6/30/2026** | | | | | | |
| 5 | **Test Period Ending 9/30/2028** | | | | | | |
| 6 | **This schedule is sponsored by PNM Witness Gutierrez** | | | | | | |
| 7 | | | | | | | |
| 8 | | | | **Note 2** | **Note 3** | **Note 4** | |
| 9 | **PNMR Loc No** | **Cost Type** | **Cost Type Description** | **Linkage 1 Jul-26 - Jun-27** | **Linkage 2 Oct-26 - Sep-27** | **Test Period Oct-27 - Sep-28** | **Reference** |
| 276 | 953 | 110 | Straight Time-General | - | - | - | |
| 277 | | 120 | Overtime-General | - | - | - | |
| 278 | | 140 | Misc Pay Pension Eligible | - | - | - | |
| 279 | | 150 | Paid Absence | - | - | - | |
| 280 | | 151 | Vacation | - | - | - | |
| 281 | | 152 | Illness | - | - | - | |
| 282 | | 153 | Holiday | - | - | - | |
| 283 | | 200 | Fleet Vehicle Maint-Rental | - | - | - | |
| 284 | | 204 | Fleet Maintenance Expense | - | - | - | |
| 285 | | 205 | Fleet Fuel Expense | - | - | - | |
| 286 | | 324 | Postage Expenses | - | - | - | |
| 287 | | 325 | Freight | - | - | - | |
| 288 | | 331 | Supplies and Equipment | - | - | - | |
| 289 | | 359 | Non-Stock Materials | - | - | - | |
| 290 | | 370 | Outside Services | - | - | - | |
| 291 | | 374 | Outside Svcs Legal | - | - | - | |
| 292 | | 377 | Outside Services-Temp Labor | - | - | - | |
| 293 | | 406 | Computer Maintenance | - | - | - | |
| 294 | | 421 | Depreciation | - | - | - | |
| 295 | | 422 | Amortization | - | - | - | |
| 296 | | 428 | Computer Software | - | - | - | |
| 297 | | 429 | Computer Hardware | - | - | - | |
| 298 | | 450 | Insurance Premiums | - | - | - | |
| 299 | | 472 | Lease - Long Term | - | - | - | |
| 300 | | 473 | Lease - Short Term | - | - | - | |

| | A | B | C | H | I | J | K |
|---|---|---|---|---|---|---|---|
| 1 | **Public Service Company of New Mexico** | | | | | | |
| 2 | **Schedule H-14** | | | | | | |
| 3 | **Expenses Associated with Affiliated Interests** | | | | | | |
| 4 | **Base Period Ending 6/30/2026** | | | | | | |
| 5 | **Test Period Ending 9/30/2028** | | | | | | |
| 6 | **This schedule is sponsored by PNM Witness Gutierrez** | | | | | | |
| 7 | | | | | | | |
| 8 | | | | **Note 2** | **Note 3** | **Note 4** | |
| 9 | **PNMR Loc No** | **Cost Type** | **Cost Type Description** | **Linkage 1 Jul-26 - Jun-27** | **Linkage 2 Oct-26 - Sep-27** | **Test Period Oct-27 - Sep-28** | **Reference** |
| 301 | | 501 | Phones | - | - | - | |
| 302 | | 530 | Employee Expense | - | - | - | |
| 303 | | 550 | Meals | - | - | - | |
| 304 | | 555 | Repro and Printing - Internal | - | - | - | |
| 305 | | 560 | Dues Fees Fines | - | - | - | |
| 306 | | 600 | Incentive Compensation | - | - | - | |
| 307 | | 610 | Expenses - General | - | - | - | |
| 308 | | 883 | Tax-FICA | - | - | - | |
| 309 | | 911 | Time Off Allowances | - | - | - | |
| 310 | | 913 | Payroll Taxes Load | - | - | - | |
| 311 | | 914 | Pension and Benefits Load | - | - | - | |
| 312 | | 915 | Injuries and Damages Load | - | - | - | |
| 313 | | 921 | Stores / Purchasing Load | - | - | - | |
| 314 | **Total 953 - Direct TNMP Texas** | | | **-** | **-** | **-** | |
| 315 | | | | | | | |
| 316 | 954 | 110 | Straight Time-General | - | - | - | |
| 317 | | 406 | Computer Maintenance | - | - | - | |
| 318 | | 450 | Insurance Premiums | - | - | - | |
| 319 | | 501 | Phones | - | - | - | |
| 320 | | 530 | Employee Expense | - | - | - | |
| 321 | | 550 | Meals | - | - | - | |
| 322 | | 600 | Incentive Compensation | - | - | - | |
| 323 | | 622 | Contributions and Donations | - | - | - | |
| 324 | | 883 | Tax-FICA | - | - | - | |
| 325 | | 911 | Time Off Allowances | - | - | - | |
| 326 | **Total 954 - Direct SNM Distribution** | | | **-** | **-** | **-** | |

| | A | B | C | H | I | J | K |
|---|---|---|---|---|---|---|---|
| 1 | **Public Service Company of New Mexico** | | | | | | |
| 2 | **Schedule H-14** | | | | | | |
| 3 | **Expenses Associated with Affiliated Interests** | | | | | | |
| 4 | **Base Period Ending 6/30/2026** | | | | | | |
| 5 | **Test Period Ending 9/30/2028** | | | | | | |
| 6 | **This schedule is sponsored by PNM Witness Gutierrez** | | | | | | |
| 7 | | | | | | | |
| 8 | | | | **Note 2** | **Note 3** | **Note 4** | |
| 9 | **PNMR Loc No** | **Cost Type** | **Cost Type Description** | **Linkage 1 Jul-26 - Jun-27** | **Linkage 2 Oct-26 - Sep-27** | **Test Period Oct-27 - Sep-28** | **Reference** |
| 327 | | | | | | | |
| 328 | 963 | 110 | Straight Time-General | - | - | - | |
| 329 | | 150 | Paid Absence | - | - | - | |
| 330 | | 151 | Vacation | - | - | - | |
| 331 | | 153 | Holiday | - | - | - | |
| 332 | | 200 | Fleet Vehicle Maint-Rental | - | - | - | |
| 333 | | 331 | Supplies and Equipment | - | - | - | |
| 334 | | 359 | Non-Stock Materials | - | - | - | |
| 335 | | 370 | Outside Services | - | - | - | |
| 336 | | 374 | Outside Svcs Legal | - | - | - | |
| 337 | | 406 | Computer Maintenance | - | - | - | |
| 338 | | 472 | Leases | - | - | - | |
| 339 | | 501 | Phones | - | - | - | |
| 340 | | 530 | Employee Expense | - | - | - | |
| 341 | | 550 | Meals | - | - | - | |
| 342 | | 555 | Repro and Printing - Internal | - | - | - | |
| 343 | | 560 | Dues Fees Fines | - | - | - | |
| 344 | | 911 | Time Off Allowances | - | - | - | |
| 345 | | 921 | Stores / Purchasing Load | - | - | - | |
| 346 | **Total 963 - IT - Telecom** | | | **-** | **-** | **-** | |
| 347 | | | | | | | |
| 348 | 964 | 421 | Depreciation | | | | |
| 349 | | 422 | Amortization | | | | |
| 350 | **Total 964 - IT - Desktops** | | | **-** | **-** | **-** | |

| | A | B | C | H | I | J | K |
|---|---|---|---|---|---|---|---|
| 1 | **Public Service Company of New Mexico** | | | | | | |
| 2 | **Schedule H-14** | | | | | | |
| 3 | **Expenses Associated with Affiliated Interests** | | | | | | |
| 4 | **Base Period Ending 6/30/2026** | | | | | | |
| 5 | **Test Period Ending 9/30/2028** | | | | | | |
| 6 | **This schedule is sponsored by PNM Witness Gutierrez** | | | | | | |
| 7 | | | | | | | |
| 8 | | | | **Note 2** | **Note 3** | **Note 4** | |
| 9 | **PNMR Loc No** | **Cost Type** | **Cost Type Description** | **Linkage 1 Jul-26 - Jun-27** | **Linkage 2 Oct-26 - Sep-27** | **Test Period Oct-27 - Sep-28** | **Reference** |
| 351 | | | | | | | |
| 352 | 968 | 110 | Straight Time-General | 6,175,322 | 6,236,464 | 6,969,631 | |
| 353 | | 120 | Overtime-General | 34 | 34 | 36 | |
| 354 | | 140 | Misc Pay Pension Eligible | 14,985 | 15,133 | 15,738 | |
| 355 | | 150 | Paid Absence | 213,543 | 215,657 | 224,283 | |
| 356 | | 151 | Vacation | 454,155 | 458,652 | 476,998 | |
| 357 | | 152 | Illness | - | - | - | |
| 358 | | 153 | Holiday | 0 | 0 | 0 | |
| 359 | | 200 | Fleet Vehicle Maint-Rental | - | - | - | |
| 360 | | 204 | Fleet Maintenance Expense | 25,654 | 25,654 | 26,424 | |
| 361 | | 325 | Freight | 1,356 | 1,356 | 1,397 | |
| 362 | | 331 | Supplies and Equipment | 7,424 | 7,424 | 7,647 | |
| 363 | | 332 | Subsciptions & Renewals | - | - | - | |
| 364 | | 359 | Non-Stock Materials | 20,890 | 20,890 | 21,516 | |
| 365 | | 370 | Outside Services | 4,244,620 | 4,244,620 | 6,078,709 | |
| 366 | | 374 | Outside Svcs Legal | 3,854 | 3,854 | 3,970 | |
| 367 | | 377 | Outside Services-Temp Labor | 115,849 | 115,849 | 119,325 | |
| 368 | | 406 | Computer Maintenance | 2,242,832 | 2,242,832 | 2,310,117 | |
| 369 | | 421 | Depreciation | - | - | - | |
| 370 | | 422 | Amortization | - | - | - | |
| 371 | | 426 | Capitalized Interest | 4 | 4 | 4 | |
| 372 | | 427 | Interest Inc/Exp | - | - | - | |
| 373 | | 428 | Computer Software | 80,823 | 80,823 | 83,248 | |
| 374 | | 429 | Computer Hardware | 8,863 | 8,863 | 9,129 | |
| 375 | | 472 | Lease - Long Term | 53,404 | 53,404 | 55,006 | |
| 376 | | 473 | Lease - Short Term | 11,727 | 11,727 | 12,079 | |
| 377 | | 500 | Utility Payments | 228 | 228 | 235 | |

| | A | B | C | H | I | J | K |
|---|---|---|---|---|---|---|---|
| 1 | **Public Service Company of New Mexico** | | | | | | |
| 2 | **Schedule H-14** | | | | | | |
| 3 | **Expenses Associated with Affiliated Interests** | | | | | | |
| 4 | **Base Period Ending 6/30/2026** | | | | | | |
| 5 | **Test Period Ending 9/30/2028** | | | | | | |
| 6 | **This schedule is sponsored by PNM Witness Gutierrez** | | | | | | |
| 7 | | | | | | | |
| 8 | | | | **Note 2** | **Note 3** | **Note 4** | |
| 9 | **PNMR Loc No** | **Cost Type** | **Cost Type Description** | **Linkage 1 Jul-26 - Jun-27** | **Linkage 2 Oct-26 - Sep-27** | **Test Period Oct-27 - Sep-28** | **Reference** |
| 378 | | 501 | Phones | 1,160,713 | 1,160,713 | 1,195,534 | |
| 379 | | 530 | Employee Expense | 194,026 | 194,026 | 216,573 | |
| 380 | | 550 | Meals | 22,224 | 22,224 | 22,891 | |
| 381 | | 554 | Professional Dues | 321,918 | 321,918 | 331,575 | |
| 382 | | 555 | Repro and Printing - Internal | 1,695 | 1,695 | 1,746 | |
| 383 | | 560 | Dues Fees Fines | 864 | 864 | 890 | |
| 384 | | 600 | Incentive Compensation | - | - | - | |
| 385 | | 610 | Expenses - General | 110,548 | 110,548 | 113,865 | |
| 386 | | 770 | Revenue-General | - | - | - | |
| 387 | | 911 | Time Off Allowances | 892,558 | 892,558 | 919,334 | |
| 388 | | 913 | Payroll Taxes Load | - | - | - | |
| 389 | | 914 | Pension and Benefits Load | 60 | 61 | 63 | |
| 390 | | 915 | Injuries and Damages Load | 30 | 30 | 31 | |
| 391 | | 916 | Pension Load Non-Service Cost | 3 | 3 | 3 | |
| 392 | | 921 | Stores / Purchasing Load | (884,570) | (884,570) | (911,107) | |
| 393 | | 926 | A and G Loads | 6,800 | 6,800 | 7,004 | |
| 394 | **Total 968 - IT - Infrastructure** | | | **15,502,436** | **15,570,339** | **18,313,894** | |
| 395 | | | | | | | |
| 396 | 972 | 370 | Outside Services | 455,632 | 455,632 | 469,301 | |
| 397 | | 421 | Depreciation | - | - | - | |
| 398 | | 422 | Amortization | - | - | - | |
| 399 | | 610 | Expenses - General | - | - | - | |
| 400 | | 770 | Revenue-General | - | - | - | |
| 401 | | 875 | Tax-Property-NM Non-Leased | - | - | - | |
| 402 | | 921 | Stores / Purchasing Load | 142 | 142 | 147 | |
| 403 | **Total 972 - Corp Alloc - Building Masthead** | | | **455,774** | **455,774** | **469,447** | |
| 404 | | | | | | | |

| | A | B | C | H | I | J | K |
|---|---|---|---|---|---|---|---|
| 1 | **Public Service Company of New Mexico** | | | | | | |
| 2 | **Schedule H-14** | | | | | | |
| 3 | **Expenses Associated with Affiliated Interests** | | | | | | |
| 4 | **Base Period Ending 6/30/2026** | | | | | | |
| 5 | **Test Period Ending 9/30/2028** | | | | | | |
| 6 | **This schedule is sponsored by PNM Witness Gutierrez** | | | | | | |
| 7 | | | | | | | |
| 8 | | | | **Note 2** | **Note 3** | **Note 4** | |
| 9 | **PNMR Loc No** | **Cost Type** | **Cost Type Description** | **Linkage 1 Jul-26 - Jun-27** | **Linkage 2 Oct-26 - Sep-27** | **Test Period Oct-27 - Sep-28** | **Reference** |
| 405 | 973 | 472 | Lease - Long Term | - | - | - | |
| 406 | **Total 973 - Corp Alloc - Building-Lewisville** | | | **-** | **-** | **-** | |
| 407 | | | | | | | |
| 408 | 974 | 150 | Paid Absence | - | - | - | |
| 409 | | 151 | Vacation | 0 | 0 | 0 | |
| 410 | | 153 | Holiday | - | - | - | |
| 411 | | 472 | Lease - Long Term | - | - | - | |
| 412 | | 473 | Lease - Short Term | 58,612 | 58,612 | 60,370 | |
| 413 | | 610 | Expenses - General | - | - | - | |
| 414 | | 875 | Tax-Property-NM Non-Leased | - | - | - | |
| 415 | **Total 974 - Building - Dallas** | | | **58,612** | **58,612** | **60,370** | |
| 416 | | | | | | | |
| 417 | 977 | 110 | Straight Time-General | 325,369 | 328,590 | 341,734 | |
| 418 | | 120 | Overtime-General | 20,003 | 20,201 | 21,009 | |
| 419 | | 150 | Paid Absence | - | - | - | |
| 420 | | 151 | Vacation | 45,079 | 45,525 | 47,346 | |
| 421 | | 153 | Holiday | (0) | (0) | (0) | |
| 422 | | 200 | Fleet Vehicle Maint-Rental | - | - | - | |
| 423 | | 204 | Fleet Maintenance Expense | 49,582 | 49,582 | 51,069 | |
| 424 | | 325 | Freight | - | - | - | |
| 425 | | 331 | Supplies and Equipment | 12,463 | 12,463 | 12,837 | |
| 426 | | 370 | Outside Services | 1,289,428 | 1,289,428 | 1,328,111 | |
| 427 | | 374 | Outside Svcs Legal | - | - | - | |
| 428 | | 421 | Depreciation | - | - | - | |
| 429 | | 427 | Interest Inc/Exp | (166) | (166) | (171) | |
| 430 | | 429 | Computer Hardware | - | - | - | |
| 431 | | 472 | Lease - Long Term | - | - | - | |

| | A | B | C | H | I | J | K |
|---|---|---|---|---|---|---|---|
| 1 | **Public Service Company of New Mexico** | | | | | | |
| 2 | **Schedule H-14** | | | | | | |
| 3 | **Expenses Associated with Affiliated Interests** | | | | | | |
| 4 | **Base Period Ending 6/30/2026** | | | | | | |
| 5 | **Test Period Ending 9/30/2028** | | | | | | |
| 6 | **This schedule is sponsored by PNM Witness Gutierrez** | | | | | | |
| 7 | | | | | | | |
| 8 | | | | **Note 2** | **Note 3** | **Note 4** | |
| 9 | **PNMR Loc No** | **Cost Type** | **Cost Type Description** | **Linkage 1 Jul-26 - Jun-27** | **Linkage 2 Oct-26 - Sep-27** | **Test Period Oct-27 - Sep-28** | **Reference** |
| 432 | | 473 | Lease - Short Term | - | - | - | |
| 433 | | 500 | Utility Payments | 64,087 | 64,087 | 66,009 | |
| 434 | | 501 | Phones | 13,215 | 13,215 | 13,611 | |
| 435 | | 530 | Employee Expense | 16,060 | 16,060 | 16,542 | |
| 436 | | 550 | Meals | 685 | 685 | 706 | |
| 437 | | 554 | Professional Dues | - | - | - | |
| 438 | | 555 | Repro and Printing - Internal | 51 | 51 | 52 | |
| 439 | | 560 | Dues Fees Fines | 497 | 497 | 512 | |
| 440 | | 610 | Expenses - General | - | - | - | |
| 441 | | 770 | Revenue-General | - | - | - | |
| 442 | | 875 | Tax-Property-NM Non-Leased | - | - | - | |
| 443 | | 911 | Time Off Allowances | - | - | - | |
| 444 | | 921 | Stores / Purchasing Load | 3,669 | 3,669 | 3,779 | |
| 445 | **Total 977 - Building - Albq - Downtown** | | | **1,840,021** | **1,843,887** | **1,903,147** | |
| 446 | | | | | | | |

| | A | B | C | H | I | J | K |
|---|---|---|---|---|---|---|---|
| 1 | **Public Service Company of New Mexico** | | | | | | |
| 2 | **Schedule H-14** | | | | | | |
| 3 | **Expenses Associated with Affiliated Interests** | | | | | | |
| 4 | **Base Period Ending 6/30/2026** | | | | | | |
| 5 | **Test Period Ending 9/30/2028** | | | | | | |
| 6 | **This schedule is sponsored by PNM Witness Gutierrez** | | | | | | |
| 7 | | | | | | | |
| 8 | | | | **Note 2** | **Note 3** | **Note 4** | |
| 9 | **PNMR Loc No** | **Cost Type** | **Cost Type Description** | **Linkage 1 Jul-26 - Jun-27** | **Linkage 2 Oct-26 - Sep-27** | **Test Period Oct-27 - Sep-28** | **Reference** |
| 447 | 980 | 110 | Straight Time-General | 48,965 | 49,450 | 51,428 | |
| 448 | | 120 | Overtime-General | 10,985 | 11,093 | 11,537 | |
| 449 | | 151 | Vacation | - | - | - | |
| 450 | | 331 | Supplies and Equipment | 6,841 | 6,841 | 7,047 | |
| 451 | | 370 | Outside Services | 656,176 | 656,176 | 675,861 | |
| 452 | | 500 | Utility Payments | 44,621 | 44,621 | 45,960 | |
| 453 | | 530 | Employee Expense | 530 | 530 | 546 | |
| 454 | | 550 | Meals | 102 | 102 | 105 | |
| 455 | | 555 | Repro and Printing - Internal | 48 | 48 | 50 | |
| 456 | | 560 | Dues Fees Fines | 2,481 | 2,481 | 2,556 | |
| 457 | | 600 | Incentive Compensation | - | - | - | |
| 458 | | 911 | Time Off Allowances | - | - | - | |
| 459 | | 921 | Stores / Purchasing Load | 1,826 | 1,826 | 1,881 | |
| 460 | **Total 980 - Building - Albq - Aztec** | | | **772,575** | **773,168** | **796,969** | |
| 461 | | | | | | | |
| 462 | 986 | 110 | Straight Time-General | 113,013 | 114,132 | 118,697 | |
| 463 | | 140 | Misc Pay Pension Eligible | - | - | - | |
| 464 | | 150 | Paid Absence | 9,107 | 9,197 | 9,565 | |
| 465 | | 151 | Vacation | 0 | 0 | 0 | |
| 466 | | 153 | Holiday | - | - | - | |
| 467 | | 370 | Outside Services | - | - | - | |
| 468 | | 406 | Computer Maintenance | 376,356 | 376,356 | 387,646 | |
| 469 | | 421 | Depreciation | - | - | - | |
| 470 | | 422 | Amortization | - | - | - | |
| 471 | | 530 | Employee Expense | 3,702 | 3,702 | 3,813 | |
| 472 | | 550 | Meals | 355 | 355 | 365 | |
| 473 | | 610 | Expenses - General | - | - | - | |

| | A | B | C | H | I | J | K |
|---|---|---|---|---|---|---|---|
| 1 | **Public Service Company of New Mexico** | | | | | | |
| 2 | **Schedule H-14** | | | | | | |
| 3 | **Expenses Associated with Affiliated Interests** | | | | | | |
| 4 | **Base Period Ending 6/30/2026** | | | | | | |
| 5 | **Test Period Ending 9/30/2028** | | | | | | |
| 6 | **This schedule is sponsored by PNM Witness Gutierrez** | | | | | | |
| 7 | | | | | | | |
| 8 | | | | **Note 2** | **Note 3** | **Note 4** | |
| 9 | **PNMR Loc No** | **Cost Type** | **Cost Type Description** | **Linkage 1 Jul-26 - Jun-27** | **Linkage 2 Oct-26 - Sep-27** | **Test Period Oct-27 - Sep-28** | **Reference** |
| 474 | | 911 | Time Off Allowances | - | - | - | |
| 475 | | 921 | Stores / Purchasing Load | - | - | - | |
| 476 | **Total 986 - Corp Alloc - MMS-Maximo** | | | **502,532** | **503,742** | **520,087** | |
| 477 | | | | | | | |
| 478 | 992 | 324 | Postage Expenses | - | - | - | |
| 479 | **Total 992** | | | **-** | **-** | **-** | |
| 480 | | | | | | | |
| 481 | 993 | 110 | Straight Time-General | 2,827,620 | 2,855,616 | 2,969,841 | |
| 482 | | 120 | Overtime-General | 826 | 834 | 868 | |
| 483 | | 140 | Misc Pay Pension Eligible | - | - | - | |
| 484 | | 150 | Paid Absence | 29,763 | 30,058 | 31,260 | |
| 485 | | 151 | Vacation | 315,317 | 318,439 | 331,177 | |
| 486 | | 152 | Illness | 66,955 | 67,617 | 70,322 | |
| 487 | | 153 | Holiday | 0 | 0 | 0 | |
| 488 | | 324 | Postage Expenses | 685 | 685 | 706 | |
| 489 | | 325 | Freight | - | - | - | |
| 490 | | 331 | Supplies and Equipment | 8,813 | 8,813 | 9,078 | |
| 491 | | 332 | Subscriptions & Renewals | 667 | 667 | 687 | |
| 492 | | 370 | Outside Services | 1,043,841 | 1,043,841 | 1,075,156 | |
| 493 | | 374 | Outside Svcs Legal | 219,639 | 219,639 | 226,228 | |
| 494 | | 377 | Outside Services-Temp Labor | - | - | - | |
| 495 | | 406 | Computer Maintenance | 29,222 | 29,222 | 30,098 | |
| 496 | | 428 | Computer Software | - | - | - | |
| 497 | | 429 | Computer Hardware | 58 | 58 | 60 | |

| | A | B | C | H | I | J | K |
|---|---|---|---|---|---|---|---|
| 1 | **Public Service Company of New Mexico** | | | | | | |
| 2 | **Schedule H-14** | | | | | | |
| 3 | **Expenses Associated with Affiliated Interests** | | | | | | |
| 4 | **Base Period Ending 6/30/2026** | | | | | | |
| 5 | **Test Period Ending 9/30/2028** | | | | | | |
| 6 | **This schedule is sponsored by PNM Witness Gutierrez** | | | | | | |
| 7 | | | | | | | |
| 8 | | | | **Note 2** | **Note 3** | **Note 4** | |
| 9 | **PNMR Loc No** | **Cost Type** | **Cost Type Description** | **Linkage 1 Jul-26 - Jun-27** | **Linkage 2 Oct-26 - Sep-27** | **Test Period Oct-27 - Sep-28** | **Reference** |
| 498 | | 450 | Insurance Premiums | 9,516,544 | 9,517,680 | 9,996,765 | |
| 499 | | 490 | Tax-General | - | - | - | |
| 500 | | 501 | Phones | 6,253 | 6,253 | 6,440 | |
| 501 | | 522 | Damages - Payment | (6,219) | (6,219) | (6,405) | |
| 502 | | 525 | Damages - General | (49) | (49) | (50) | |
| 503 | | 530 | Employee Expense | 175,311 | 175,311 | 180,570 | |
| 504 | | 550 | Meals | 31,931 | 31,931 | 32,889 | |
| 505 | | 554 | Professional Dues | 248 | 248 | 256 | |
| 506 | | 555 | Repro and Printing - Internal | 36,379 | 36,379 | 37,470 | |
| 507 | | 560 | Dues Fees Fines | 6,488 | 6,488 | 6,683 | |
| 508 | | 600 | Incentive Compensation | 36,812 | 36,812 | 37,917 | |
| 509 | | 610 | Expenses - General | 143,239 | 143,239 | 147,536 | |
| 510 | | 883 | Tax-FICA | - | - | - | |
| 511 | | 884 | Tax-FUTA | - | - | - | |
| 512 | | 885 | Tax-SUTA | - | - | - | |
| 513 | | 911 | Time Off Allowances | - | - | - | |
| 514 | | 913 | Payroll Taxes Load | - | - | - | |
| 515 | | 914 | Pension and Benefits Load | (688,885) | (695,706) | (723,534) | |
| 516 | | 915 | Injuries and Damages Load | (66,347) | (67,004) | (69,684) | |
| 517 | | 921 | Stores / Purchasing Load | 3,343 | 3,343 | 3,443 | |
| 518 | **Total 993 - Employee Headcount** | | | **13,738,453** | **13,764,195** | **14,395,775** | |

| | A | B | C | H | I | J | K |
|---|---|---|---|---|---|---|---|
| 1 | **Public Service Company of New Mexico** | | | | | | |
| 2 | **Schedule H-14** | | | | | | |
| 3 | **Expenses Associated with Affiliated Interests** | | | | | | |
| 4 | **Base Period Ending 6/30/2026** | | | | | | |
| 5 | **Test Period Ending 9/30/2028** | | | | | | |
| 6 | **This schedule is sponsored by PNM Witness Gutierrez** | | | | | | |
| 7 | | | | | | | |
| 8 | | | | **Note 2** | **Note 3** | **Note 4** | |
| 9 | **PNMR Loc No** | **Cost Type** | **Cost Type Description** | **Linkage 1 Jul-26 - Jun-27** | **Linkage 2 Oct-26 - Sep-27** | **Test Period Oct-27 - Sep-28** | **Reference** |
| 519 | | | | | | | |
| 520 | 999 | 110 | Straight Time-General | - | - | - | |
| 521 | | 120 | Overtime-General | - | - | - | |
| 522 | | 140 | Misc Pay Pension Eligible | - | - | - | |
| 523 | | 150 | Paid Absence | - | - | - | |
| 524 | | 151 | Vacation | - | - | - | |
| 525 | | 153 | Holiday | - | - | - | |
| 526 | | 324 | Postage Expenses | - | - | - | |
| 527 | | 325 | Freight | - | - | - | |
| 528 | | 331 | Supplies and Equipment | - | - | - | |
| 529 | | 332 | Subsciptions & Renewals | - | - | - | |
| 530 | | 370 | Outside Services | - | - | - | |
| 531 | | 374 | Outside Svcs Legal | - | - | - | |
| 532 | | 377 | Outside Services-Temp Labor | - | - | - | |
| 533 | | 421 | Depreciation | - | - | - | |
| 534 | | 427 | Interest Inc/Exp | - | - | - | |
| 535 | | 428 | Computer Software | - | - | - | |
| 536 | | 429 | Computer Hardware | - | - | - | |
| 537 | | 472 | Lease - Long Term | - | - | - | |
| 538 | | 490 | Tax-General | - | - | - | |
| 539 | | 501 | Phones | - | - | - | |
| 540 | | 530 | Employee Expense | - | - | - | |
| 541 | | 550 | Meals | - | - | - | |
| 542 | | 554 | Professional Dues | - | - | - | |

| | A | B | C | H | I | J | K |
|---|---|---|---|---|---|---|---|
| 1 | **Public Service Company of New Mexico** | | | | | | |
| 2 | **Schedule H-14** | | | | | | |
| 3 | **Expenses Associated with Affiliated Interests** | | | | | | |
| 4 | **Base Period Ending 6/30/2026** | | | | | | |
| 5 | **Test Period Ending 9/30/2028** | | | | | | |
| 6 | **This schedule is sponsored by PNM Witness Gutierrez** | | | | | | |
| 7 | | | | | | | |
| 8 | | | | **Note 2** | **Note 3** | **Note 4** | |
| 9 | **PNMR Loc No** | **Cost Type** | **Cost Type Description** | **Linkage 1 Jul-26 - Jun-27** | **Linkage 2 Oct-26 - Sep-27** | **Test Period Oct-27 - Sep-28** | **Reference** |
| 543 | | 555 | Repro and Printing - Internal | - | - | - | |
| 544 | | 560 | Dues Fees Fines | - | - | - | |
| 545 | | 600 | Incentive Compensation | - | - | - | |
| 546 | | 610 | Expenses - General | - | - | - | |
| 547 | | 622 | Contributions and Donations | - | - | - | |
| 548 | | 874 | Tax-Other Than Income | - | - | - | |
| 549 | | 882 | Tax-Compensating | - | - | - | |
| 550 | | 883 | Tax-FICA | - | - | - | |
| 551 | | 889 | Tax-Federal Excise | - | - | - | |
| 552 | | 911 | Time Off Allowances | - | - | - | |
| 553 | | 921 | Stores / Purchasing Load | - | - | - | |
| 554 | **Total 999 - Corporate Unallocated** | | | **-** | **-** | **-** | |
| 555 | | | | | | | |
| 556 | | | | 75,330,225 | 75,681,376 | 83,719,874 | |
| 557 | | | | | | | |
| 558 | **Charges from Public Service Company of New Mexico to:** | | | | | | |
| 559 | TNMP - Call Center Services | | | - | - | - | |
| 560 | | | | - | - | - | |

| | A |
|---|---|
| 1 | **Public Service Company of New Mexico** |
| 2 | **Schedule H-14** |
| 3 | **Expenses Associated with Affiliated Interests (Notes)** |
| 4 | **Base Period Ending 6/30/2026** |
| 5 | **Test Period Ending 9/30/2028** |
| 6 | **This schedule is sponsored by PNM Witness Gutierrez** |
| 7 | |
| 8 | Base period data is historical information from the Company's Book Balance Amounts |
| 9 | Note 1:  please refer to PNM Exhibit RNG-4 WP SS-1, Column F. |
| 10 | Note 2: Please refer to PNM Exhibit RNG-4 WP SS-12, Column N |
| 11 | Note 3: Please refer to PNM Exhibit RNG-4 WP SS-13, Column N |
| 12 | Note 4: Please refer to PNM Exhibit RNG-4 WP SS-1, Column H |
| 13 | Column E - Represents actual amounts recorded on the books and records. |
| 14 | Refer to the testimony of PNM Witness Gutierrez for further discussion of adjustments to Base Period and |
| 15 | development of Test Period and Linkage data. |

# PNM Schedule H-15

Expenses associated with non-utility services

| | A | B | C | D |
|---|---|---|---|---|
| 1 | **Public Service Company of New Mexico** | | | |
| 2 | **Schedule H-15** | | | |
| 3 | **Expenses Associated With Non-Utility Services** | | | |
| 4 | **Base Period Ending 6/30/2026** | | | |
| 5 | **Test Period Ending 9/30/2028** | | | |
| 6 | **This schedule is sponsored by PNM Witness Gutierrez** | | | |
| 7 | | | | |
| 8 | **Description** | **FERC** | **Base Period Total** | **Base Period Adjustments** |
| 9 | | | | |
| 10 | **Investments** | | | |
| 11 | Investment Income | 421 | (56,503,158) | |
| 12 | | | | |
| 13 | Total Investments | | (56,503,158) | - |
| 14 | | | | |
| 15 | **Revenues** | | | |
| 16 | Merchandise and Jobbing | 415 | (2,672,876) | |
| 17 | Non-Operating Income | 418 | - | |
| 18 | Interest and Dividend Income | 419 | (17,055,733) | |
| 19 | AFUDC | 419.1 | (12,174,112) | |
| 20 | Carrying Charges on Reg Assets | 407.4 | - | |
| 21 | General Taxes | 408 | - | |
| 22 | Current SIT and FIT | 409 | (10,091,441) | |
| 23 | Deferred SIT and FIT | 410 | 390,572,150 | |
| 24 | | | | |
| 25 | Total Revenues | | 348,577,988 | - |
| 26 | | | | |
| 27 | **Expenses** | | | |
| 28 | Merchandise and Jobbing | 416 | 2,665,884 | |
| 29 | Miscellaneous Non-Operating Income | 421 | - | |
| 30 | Miscellaneous Amortization | 425 | 844,446 | |
| 31 | Donations | 426.1 | 205,117 | |
| 32 | Penalties | 426.3 | (310,856) | |
| 33 | Political, Etc. | 426.4 | 33,161,479 | |
| 34 | Miscellaneous Donations | 426.4 | - | |
| 35 | ITC - Amortization | 411.4 | (169,377) | |
| 36 | | | | |
| 37 | Total Expenses | | 36,396,693 | - |

| | A | B | E | F |
|---|---|---|---|---|
| 1 | **Public Service Company of New Mexico** | | | |
| 2 | **Schedule H-15** | | | |
| 3 | **Expenses Associated With Non-Utility Services** | | | |
| 4 | **Base Period Ending 6/30/2026** | | | |
| 5 | **Test Period Ending 9/30/2028** | | | |
| 6 | **This schedule is sponsored by PNM Witness Gutierrez** | | | |
| 7 | | | | |
| 8 | **Description** | **FERC** | **Adjusted Base Period Total** | **Linkage 1 Jul-26 - Jun-27** |
| 9 | | | | |
| 10 | **Investments** | | | |
| 11 | Investment Income | 421 | (56,503,158) | (58,198,253) |
| 12 | | | | |
| 13 | Total Investments | | (56,503,158) | (58,198,253) |
| 14 | | | | |
| 15 | **Revenues** | | | |
| 16 | Merchandise and Jobbing | 415 | (2,672,876) | (2,753,062) |
| 17 | Non-Operating Income | 418 | - | - |
| 18 | Interest and Dividend Income | 419 | (17,055,733) | (17,567,405) |
| 19 | AFUDC | 419.1 | (12,174,112) | (12,539,336) |
| 20 | Carrying Charges on Reg Assets | 407.4 | - | - |
| 21 | General Taxes | 408 | - | - |
| 22 | Current SIT and FIT | 409 | (10,091,441) | (10,394,184) |
| 23 | Deferred SIT and FIT | 410 | 390,572,150 | 402,289,315 |
| 24 | | | | |
| 25 | Total Revenues | | 348,577,988 | 359,035,328 |
| 26 | | | | |
| 27 | **Expenses** | | | |
| 28 | Merchandise and Jobbing | 416 | 2,665,884 | 2,745,860 |
| 29 | Miscellaneous Non-Operating Income | 421 | - | - |
| 30 | Miscellaneous Amortization | 425 | 844,446 | 869,779 |
| 31 | Donations | 426.1 | 205,117 | 211,271 |
| 32 | Penalties | 426.3 | (310,856) | (320,182) |
| 33 | Political, Etc. | 426.4 | 33,161,479 | 34,156,324 |
| 34 | Miscellaneous Donations | 426.4 | - | - |
| 35 | ITC - Amortization | 411.4 | (169,377) | (169,153) |
| 36 | | | | |
| 37 | Total Expenses | | 36,396,693 | 37,493,898 |

| | A | B | G | H |
|---|---|---|---|---|
| 1 | **Public Service Company of New Mexico** | | | |
| 2 | **Schedule H-15** | | | |
| 3 | **Expenses Associated With Non-Utility Services** | | | |
| 4 | **Base Period Ending 6/30/2026** | | | |
| 5 | **Test Period Ending 9/30/2028** | | | |
| 6 | **This schedule is sponsored by PNM Witness Gutierrez** | | | |
| 7 | | | | |
| 8 | **Description** | **FERC** | **Linkage 2 Oct-26 - Sep-27** | **Test Period Escalated** |
| 9 | | | | |
| 10 | **Investments** | | | |
| 11 | Investment Income | 421 | (58,198,253) | (59,944,200) |
| 12 | | | | |
| 13 | Total Investments | | (58,198,253) | (59,944,200) |
| 14 | | | | |
| 15 | **Revenues** | | | |
| 16 | Merchandise and Jobbing | 415 | (2,753,062) | (2,835,654) |
| 17 | Non-Operating Income | 418 | - | - |
| 18 | Interest and Dividend Income | 419 | (17,567,405) | (18,094,427) |
| 19 | AFUDC | 419.1 | (12,539,336) | (12,915,516) |
| 20 | Carrying Charges on Reg Assets | 407.4 | - | - |
| 21 | General Taxes | 408 | - | - |
| 22 | Current SIT and FIT | 409 | (10,394,184) | (10,706,010) |
| 23 | Deferred SIT and FIT | 410 | 402,289,315 | 414,357,994 |
| 24 | | | | |
| 25 | Total Revenues | | 359,035,328 | 369,806,388 |
| 26 | | | | |
| 27 | **Expenses** | | | |
| 28 | Merchandise and Jobbing | 416 | 2,745,860 | 2,828,236 |
| 29 | Miscellaneous Non-Operating Income | 421 | - | - |
| 30 | Miscellaneous Amortization | 425 | 869,779 | 895,873 |
| 31 | Donations | 426.1 | 211,271 | 217,609 |
| 32 | Penalties | 426.3 | (320,182) | (329,787) |
| 33 | Political, Etc. | 426.4 | 34,156,324 | 35,181,013 |
| 34 | Miscellaneous Donations | 426.4 | - | - |
| 35 | ITC - Amortization | 411.4 | (168,921) | (13,212,630) |
| 36 | | | | |
| 37 | Total Expenses | | 37,494,131 | 25,580,314 |

| | A | B | I | J |
|---|---|---|---|---|
| 1 | **Public Service Company of New Mexico** | | | |
| 2 | **Schedule H-15** | | | |
| 3 | **Expenses Associated With Non-Utility Services** | | | |
| 4 | **Base Period Ending 6/30/2026** | | | |
| 5 | **Test Period Ending 9/30/2028** | | | |
| 6 | **This schedule is sponsored by PNM Witness Gutierrez** | | | |
| 7 | | | | |
| 8 | **Description** | **FERC** | **Test Period Adjustments** | **Adjusted Test Period Total** |
| 9 | | | | |
| 10 | **Investments** | | | |
| 11 | Investment Income | 421 | | (59,944,200) |
| 12 | | | | |
| 13 | Total Investments | | - | (59,944,200) |
| 14 | | | | |
| 15 | **Revenues** | | | |
| 16 | Merchandise and Jobbing | 415 | | (2,835,654) |
| 17 | Non-Operating Income | 418 | | - |
| 18 | Interest and Dividend Income | 419 | | (18,094,427) |
| 19 | AFUDC | 419.1 | | (12,915,516) |
| 20 | Carrying Charges on Reg Assets | 407.4 | | - |
| 21 | General Taxes | 408 | | - |
| 22 | Current SIT and FIT | 409 | | (10,706,010) |
| 23 | Deferred SIT and FIT | 410 | | 414,357,994 |
| 24 | | | | |
| 25 | Total Revenues | | - | 369,806,388 |
| 26 | | | | |
| 27 | **Expenses** | | | |
| 28 | Merchandise and Jobbing | 416 | | 2,828,236 |
| 29 | Miscellaneous Non-Operating Income | 421 | | - |
| 30 | Miscellaneous Amortization | 425 | | 895,873 |
| 31 | Donations | 426.1 | | 217,609 |
| 32 | Penalties | 426.3 | | (329,787) |
| 33 | Political, Etc. | 426.4 | | 35,181,013 |
| 34 | Miscellaneous Donations | 426.4 | | - |
| 35 | ITC - Amortization | 411.4 | | (13,212,630) |
| 36 | | | | |
| 37 | Total Expenses | | - | 25,580,314 |

| | A | B | K | L |
|---|---|---|---|---|
| 1 | **Public Service Company of New Mexico** | | | |
| 2 | **Schedule H-15** | | | |
| 3 | **Expenses Associated With Non-Utility Services** | | | |
| 4 | **Base Period Ending 6/30/2026** | | | |
| 5 | **Test Period Ending 9/30/2028** | | | |
| 6 | **This schedule is sponsored by PNM Witness Gutierrez** | | | |
| 7 | | | | |
| 8 | **Description** | **FERC** | **Adjusted Base and Test Periods Variance** | **Reference** |
| 9 | | | | |
| 10 | **Investments** | | | |
| 11 | Investment Income | 421 | (3,441,042) | |
| 12 | | | | |
| 13 | Total Investments | | (3,441,042) | |
| 14 | | | | |
| 15 | **Revenues** | | | |
| 16 | Merchandise and Jobbing | 415 | (162,778) | |
| 17 | Non-Operating Income | 418 | - | |
| 18 | Interest and Dividend Income | 419 | (1,038,694) | |
| 19 | AFUDC | 419.1 | (741,403) | |
| 20 | Carrying Charges on Reg Assets | 407.4 | - | |
| 21 | General Taxes | 408 | - | |
| 22 | Current SIT and FIT | 409 | (614,569) | |
| 23 | Deferred SIT and FIT | 410 | 23,785,844 | |
| 24 | | | | |
| 25 | Total Revenues | | 21,228,399 | |
| 26 | | | | |
| 27 | **Expenses** | | | |
| 28 | Merchandise and Jobbing | 416 | 162,352 | |
| 29 | Miscellaneous Non-Operating Income | 421 | - | |
| 30 | Miscellaneous Amortization | 425 | 51,427 | |
| 31 | Donations | 426.1 | 12,492 | |
| 32 | Penalties | 426.3 | (18,931) | |
| 33 | Political, Etc. | 426.4 | 2,019,534 | |
| 34 | Miscellaneous Donations | 426.4 | - | |
| 35 | ITC - Amortization | 411.4 | (13,043,253) | |
| 36 | | | | |
| 37 | Total Expenses | | (10,816,379) | |

| | A |
|---|---|
| 1 | **Public Service Company of New Mexico** |
| 2 | **Schedule H-15** |
| 3 | **Expenses Associated With Non-Utility Services (Notes)** |
| 4 | **Base Period Ending 6/30/2026** |
| 5 | **Test Period Ending 9/30/2028** |
| 6 | **This schedule is sponsored by PNM Witness Gutierrez** |
| 7 | |
| 8 | PNM does not include any of these amounts in its filed cost of service studies except for ITC Amortizations, please |
| 9 | refer to Rule 530 Schedule H-13 for details on ITC Amortizations. This is being provided for informational purposes only. |
| 10 | Base period data is historical information from the Company's Book Balance Amounts. |
| 11 | Linkage and Test period amounts reflect escalations of 3% for 2026 and 3% for 2027 with the exception of ITC |
| 12 | Amortizations which are specifically forecasted in Rule 530 Schedule H-13. |

# PNM Schedule H-16

Explanation of the adjustments to expenses of operation

| | A |
|---|---|
| 1 | **Public Service Company of New Mexico** |
| 2 | **Schedule H-16** |
| 3 | **Explanation of the Adjustments to Expenses of Operation** |
| 4 | **Base Period Ending 6/30/2026** |
| 5 | **Test Period Ending 9/30/2028** |
| 6 | **This schedule is sponsored by PNM Witness Gutierrez** |
| 7 | |
| 8 | Schedules H-1 through H-15 and/or the testimonies of PNM Witnesses Gutierrez and Morris explain the |
| 9 | nature of all adjustments made to the book balances of expenses of operation. Each adjustment is |
| 10 | referenced. Please also refer to PNM Exhibit RNG-4 WP OM-2 and WP Fuel. |

Balance sheet, income statement, statement of changes in financial position

# PNM I Series Schedules

Schedule I-1: Balance sheet

Schedule I-2: Income statement

Schedule I-3: Statement of changes in financial position

# PNM Schedule I-1

Balance sheet

| | A | B | C | D | E | F | G |
|---|---|---|---|---|---|---|---|
| 1 | **Public Service Company of New Mexico** | | | | | | |
| 2 | **Schedule I-1** | | | | | | |
| 3 | **Balance Sheet** | | | | | | |
| 4 | **Base Period Ending 6/30/2026** | | | | | | |
| 5 | **Test Period Ending 9/30/2028** | | | | | | Column L in Base |
| 6 | **This schedule is sponsored by PNM Witness Gutierrez** | | | | | | |
| 7 | **Description** | **Books & Records 6/30/2026** | **Remove Non-COS Items Note 1** | **Unadjusted Base Period 6/30/2026** | **Base Period Adjustments Note 2** | **Adjusted Base Period** | **PNM Base Rate Jurisdiction Adjusted Base Period** |
| 8 | ASSETS | | | | | | |
| 9 | Utility Plant | | | | | | |
| 10 | Utility Plant | 7,564,626,669 | (87,826,002) | 7,476,800,667 | 140,881,576 | 7,617,682,242 | - |
| 11 | Construction Work in Progress | 397,350,324 | - | 397,350,324 | (397,350,324) | - | - |
| 12 | Total Utility Plant | 7,961,976,993 | (87,826,002) | 7,874,150,991 | (256,468,749) | 7,617,682,242 | - |
| 13 | Accumulated Provision for Depreciation and Amortization | (2,495,822,595) | 84,179 | (2,495,738,415) | (140,076,994) | (2,635,815,409) | - |
| 14 | Net Utility Plant | 5,466,154,399 | (87,741,823) | 5,378,412,575 | (396,545,742) | 4,981,866,833 | 3,768,049,520 |
| 15 | Nuclear Fuel | 103,143,133 | - | 103,143,133 | (1,480,523) | 101,662,609 | |
| 16 | Accumulated Provision for Amortization of Nuclear Fuel Assemblies | (25,205,831) | - | (25,205,831) | - | (25,205,831) | |
| 17 | Net Nuclear Fuel | 77,937,302 | - | 77,937,302 | (1,480,523) | 76,456,779 | 76,456,779 |
| 18 | Net Utility Plant (Note 4) | 5,544,091,701 | (87,741,823) | 5,456,349,877 | (398,026,265) | 5,058,323,612 | 3,844,506,299 |
| 19 | Utility Plant Adjustments (Note 3) | (77,948,340) | 77,948,340 | - | - | - | |
| 20 | | | | | | | |
| 21 | Other Property and Investments | | | | | | |
| 22 | Nonutility Property | 98,532 | (98,532) | - | - | - | - |
| 23 | Accumulated Provision for Depreciation and Amortization | (2,653) | 2,653 | - | - | - | - |
| 24 | Net Nonutility Property | 95,879 | (95,879) | - | - | - | - |
| 25 | Investment in Subsidiary Companies | 1,724,623 | (1,724,623) | - | - | - | - |
| 26 | Other Investments | 513,871,987 | (513,871,987) | - | - | - | - |
| 27 | Other Special Funds | 41,579,240 | (41,579,240) | - | - | - | - |
| 28 | Long-Term Portion of Derivative Assets | - | - | - | - | - | - |
| 29 | Total Other Property and Investments | 557,271,729 | (557,271,729) | - | - | - | - |
| 30 | | | | | | | |
| 31 | Current and Accrued Assets | | | | | | |
| 32 | Cash | 4,592,689 | (1,647,187) | 2,945,502 | - | 2,945,502 | 2,945,502 |
| 33 | Special Deposits | - | - | - | - | - | - |
| 34 | Working Fund | 18,725 | (18,725) | - | - | - | - |
| 35 | Temporary Cash Investments | 1,200,000 | (1,200,000) | - | - | - | - |
| 36 | Customer Accounts Receivable | 104,824,029 | (104,824,029) | - | - | - | - |
| 37 | Other Accounts Receivable | 18,171,002 | (18,171,002) | - | - | - | - |
| 38 | Accumulated Provision for Uncollectable Accounts | (1,572,964) | 1,572,964 | - | - | - | - |
| 39 | Notes Receivable from Associated Companies | 8,719,312 | (8,719,312) | - | - | - | - |
| 40 | Accounts Receivable from Associated Companies | 210,451 | (210,451) | - | - | - | - |
| 41 | Fuel Stock | 999,757 | - | 999,757 | 71,278 | 1,071,035 | 1,071,035 |
| 42 | Plant Materials and Operating Supplies | 142,233,663 | | 142,233,663 | (525,231) | 141,708,432 | 125,370,306 |
| 43 | Stores Expense Undistributed | 2,341 | (2,341) | - | - | - | - |
| 44 | Prepayments | 22,033,843 | - | 22,033,843 | (1,929,396) | 20,104,447 | 16,334,951 |
| 45 | Interest and Dividends Receivable | 4,273,787 | (4,273,787) | - | - | - | - |
| 46 | Accrued Utility Revenues | 64,940,522 | (64,940,522) | - | - | - | - |
| 47 | Miscellaneous Current and Accrued Assets | (10,549) | 10,549 | - | - | - | - |
| 48 | Derivative Instrument Assets | - | - | - | - | - | - |
| 49 | Long-Term Portion of Derivative Instrument Assets | - | | - | - | - | - |
| 50 | Total Current and Accrued Assets | 370,636,608 | (202,423,843) | 168,212,765 | (2,383,350) | 165,829,416 | 145,721,795 |

| | A | B | C | D | E | F | G |
|---|---|---|---|---|---|---|---|
| 1 | **Public Service Company of New Mexico** | | | | | | |
| 2 | **Schedule I-1** | | | | | | |
| 3 | **Balance Sheet** | | | | | | |
| 4 | **Base Period Ending 6/30/2026** | | | | | | |
| 5 | **Test Period Ending 9/30/2028** | | | | | | Column L in Base |
| 6 | **This schedule is sponsored by PNM Witness Gutierrez** | | | | | | |
| 7 | **Description** | **Books & Records 6/30/2026** | **Remove Non-COS Items Note 1** | **Unadjusted Base Period 6/30/2026** | **Base Period Adjustments Note 2** | **Adjusted Base Period** | **PNM Base Rate Jurisdiction Adjusted Base Period** |
| 51 | | | | | | | |
| 52 | Deferred Debits | | | | | | |
| 53 | Unamortized Debt Expenses | 11,245,722 | (11,245,722) | - | - | - | - |
| 54 | Other Regulatory Assets | 507,639,928 | (245,823,778) | 261,816,149 | (103,540,211) | 158,275,939 | 156,794,677.64 |
| 55 | Preliminary Surveys and Investigation Charges | 41,993,840 | (41,993,840) | - | - | - | - |
| 56 | Clearing Accounts | 5,743,196 | (5,743,196) | - | - | - | - |
| 57 | Miscellaneous Deferred Debits | 227,011,826 | 18,928,408 | 245,940,234 | | 245,940,234 | 190,131,251 |
| 58 | Unamortized Loss on Reacquired Debt | 3,905,500 | - | 3,905,500 | - | 3,905,500 | 3,048,196 |
| 59 | Accumulated Deferred Income Taxes | 220,908,869 | (220,908,869) | - | - | - | - |
| 60 | Total Deferred Debits | 1,018,448,880 | (506,786,997) | 511,661,883 | (103,540,211) | 408,121,673 | 349,974,125 |
| 61 | Total Assets | 7,412,500,577 | (1,276,276,051) | 6,136,224,526 | (503,949,826) | 5,632,274,700 | 4,340,202,218 |
| 62 | | | | | | | |
| 63 | LIABILITIES AND STOCKHOLDER'S EQUITY | | | | | | |
| 64 | Proprietary Capital | | | | | | |
| 65 | Common Stock Issued | (195,588,994) | (2,364,242,891) | (2,559,831,885) | 197,518,251 | (2,367,580,629) | (1,828,990,636) |
| 66 | Preferred Stock Issued | (11,529,299) | - | (11,529,299) | - | (11,529,299) | (8,323,257) |
| 67 | Premium on Capital Stock | (456,815,703) | 456,815,703 | - | - | - | - |
| 68 | Other Paid-In Capital | (1,198,672,591) | 1,198,672,591 | - | - | - | - |
| 69 | Capital Stock Expense | 19,859,236 | (19,859,236) | - | - | - | - |
| 70 | Retained Earnings | (727,286,815) | 727,286,815 | - | - | - | - |
| 71 | Unappropriated Undistributed Subsidiary Earnings | - | - | - | - | - | - |
| 72 | Accumulated Other Comprehensive Income | 24,765,196 | (24,765,196) | - | - | - | - |
| 73 | Total Proprietary Capital | (2,545,268,971) | (26,092,214) | (2,571,361,184) | 197,518,251 | (2,379,109,928) | (1,837,313,893) |
| 74 | | | | | | | |
| 75 | Long-Term Debt | | | | | | |
| 76 | Bonds | (2,225,345,000) | (22,814,729) | (2,248,159,729) | 172,707,669 | (2,070,185,065) | (1,606,525,976) |
| 77 | Other Long-Term Debt | (315,000,000) | 315,000,000 | - | - | - | - |
| 78 | Unamortized Discount on Long-Term Debt-Debit | - | - | - | - | - | - |
| 79 | Total Long-Term Debt | (2,540,345,000) | 292,185,271 | (2,248,159,729) | 172,707,669 | (2,070,185,065) | (1,606,525,976) |
| 80 | | | | | | | |
| 81 | Other Noncurrent Liabilities | | | | | | |
| 82 | Obligations Under Capital Leases - Noncurrent | (44,431,157) | 44,431,157 | - | - | - | - |
| 83 | Accumulated Provision for Injuries and Damages | (4,446,972) | - | (4,446,972) | 588,407 | (3,858,566) | (3,549,020) |
| 84 | Accumulated Provision for Pensions and Benefits | (6,652,707) | 6,652,707 | - | - | - | - |
| 85 | Long-Term Portion of Derivative Instrument Liabilities | - | - | - | - | - | - |
| 86 | Asset Retirement Obligations | (257,655,981) | - | (257,655,981) | 221,215,653 | (36,440,328) | (36,440,328) |
| 87 | Total Other Noncurrent Liabilities | (313,186,817) | 51,083,864 | (262,102,953) | 221,804,060 | (40,298,893) | (39,989,348) |

| | A | B | C | D | E | F | G |
|---|---|---|---|---|---|---|---|
| 1 | **Public Service Company of New Mexico** | | | | | | |
| 2 | **Schedule I-1** | | | | | | |
| 3 | **Balance Sheet** | | | | | | |
| 4 | **Base Period Ending 6/30/2026** | | | | | | |
| 5 | **Test Period Ending 9/30/2028** | | | | | | Column L in Base |
| 6 | **This schedule is sponsored by PNM Witness Gutierrez** | | | | | | |
| 7 | **Description** | **Books & Records 6/30/2026** | **Remove Non-COS Items Note 1** | **Unadjusted Base Period 6/30/2026** | **Base Period Adjustments Note 2** | **Adjusted Base Period** | **PNM Base Rate Jurisdiction Adjusted Base Period** |
| 88 | | | | | | | |
| 89 | Current and Accrued Liabilities | | | | | | |
| 90 | Notes Payable | (215,000,000) | 215,000,000 | - | - | - | - |
| 91 | Accounts Payable | (149,478,060) | 149,478,060 | - | - | - | - |
| 92 | Accounts Payable to Associated Companies | (38,523,617) | 38,523,617 | - | - | - | - |
| 93 | Customer Deposits | (7,025,031) | - | (7,025,031) | 175,921 | (6,849,111) | (6,849,111) |
| 94 | Taxes Accrued | (15,434,618) | 15,434,618 | - | - | - | - |
| 95 | Interest Accrued | (28,025,075) | 28,025,075 | - | - | - | - |
| 96 | Dividends Declared | (132,011) | 132,011 | - | - | - | - |
| 97 | Tax Collections Payable | (14,898,599) | 14,898,599 | - | - | - | - |
| 98 | Miscellaneous Current and Accrued Liabilities | (58,290,423) | 58,290,423 | - | - | - | - |
| 99 | Obligations Under Capital Leases - Current | (12,759,205) | 12,759,205 | - | - | - | - |
| 100 | Derivative Instrument Liabilities | - | - | - | - | - | - |
| 101 | Long-Term Portion of Derivative Instrument Liabilities | - | - | - | - | - | - |
| 102 | Total Current and Accrued Liabilities | (539,566,638) | 532,541,607 | (7,025,031) | 175,921 | (6,849,111) | (6,849,111) |
| 103 | | | | | | | |
| 104 | Deferred Credits | | | | | | |
| 105 | Customer Advances for Construction | (68,875,377) | 68,875,377 | - | - | - | - |
| 106 | Accumulated Deferred Investment Tax Credits | (80,814,092) | 80,814,092 | - | - | - | - |
| 107 | Other Deferred Credits | (123,209,947) | 41,402,065 | (81,807,882) | 16,373,034 | (65,434,848) | (8,848,058) |
| 108 | Other Regulatory Liabilities | (239,652,540) | 8,698,427 | (230,954,113) | - | (230,954,113) | (175,595,914) |
| 109 | Accumulated Deferred Income Taxes | (961,581,194) | 226,767,562 | (734,813,633) | (104,629,108) | (839,442,741) | (665,079,918) |
| 110 | Total Deferred Credits | (1,474,133,151) | 426,557,523 | (1,047,575,628) | (88,256,074) | (1,135,831,702) | (849,523,890) |
| 111 | Total Capitalization and Liabilities | (7,412,500,577) | 1,276,276,051 | (6,136,224,526) | 503,949,826 | (5,632,274,700) | (4,340,202,218) |
| 112 | | | | | | | |
| 113 | | | | | | | |
| 114 | Net Cost of Service Rate Base | 2,747,463,293 | 2,072,057,621 | 4,819,520,914 | (370,225,920) | 4,449,294,994 | 3,443,839,870 |

| | A | H | I | J | K | L |
|---|---|---|---|---|---|---|
| 1 | **Public Service Company of New Mexico** | | | | | |
| 2 | **Schedule I-1** | | | | | |
| 3 | **Balance Sheet** | | | | | |
| 4 | **Base Period Ending 6/30/2026** | | | | | |
| 5 | **Test Period Ending 9/30/2028** | | | Column I in Test | Column L in Test | |
| 6 | **This schedule is sponsored by PNM Witness Gutierrez** | | | | | |
| 7 | **Description** | **Linkage Ending - COS Model 6/30/2027 Note 2** | **Linkage Ending 9/30/2027 Note 2** | **Test Period Note 2** | **PNM Base Rate Jurisdiction Test Period** | **PNM Exhibit RNG-3 References** |
| 8 | ASSETS | | | | | |
| 9 | Utility Plant | | | | | |
| 10 | Utility Plant | - | - | - | - | |
| 11 | Construction Work in Progress | - | - | - | - | |
| 12 | Total Utility Plant | - | - | - | - | |
| 13 | Accumulated Provision for Depreciation and Amortization | - | - | - | - | |
| 14 | Net Utility Plant | 5,417,042,687 | 5,698,668,166 | 5,893,837,858 | 4,600,072,468 | Line 81 |
| 15 | Nuclear Fuel | 73,987,454 | 71,152,528 | 55,831,077 | 55,831,077 | |
| 16 | Accumulated Provision for Amortization of Nuclear Fuel Assemblies | - | - | - | - | |
| 17 | Net Nuclear Fuel | 73,987,454 | 71,152,528 | 55,831,077 | 55,831,077 | Line 228 |
| 18 | Net Utility Plant (Note 4) | 5,491,030,141 | 5,769,820,694 | 5,949,668,935 | 4,655,903,545 | |
| 19 | Utility Plant Adjustments (Note 3) | | | | | |
| 20 | | | | | | |
| 21 | Other Property and Investments | | | | | |
| 22 | Nonutility Property | - | - | - | - | |
| 23 | Accumulated Provision for Depreciation and Amortization | - | - | - | - | |
| 24 | Net Nonutility Property | - | - | - | - | |
| 25 | Investment in Subsidiary Companies | - | - | - | - | |
| 26 | Other Investments | - | - | - | - | |
| 27 | Other Special Funds | - | - | - | - | |
| 28 | Long-Term Portion of Derivative Assets | - | - | - | - | |
| 29 | Total Other Property and Investments | - | - | - | - | |
| 30 | | | | | | |
| 31 | Current and Accrued Assets | | | | | |
| 32 | Cash | 3,823,581 | 3,823,581 | 3,823,581 | 3,823,581 | Line 245 |
| 33 | Special Deposits | - | - | - | - | |
| 34 | Working Fund | - | - | - | - | |
| 35 | Temporary Cash Investments | - | - | - | - | |
| 36 | Customer Accounts Receivable | - | - | - | - | |
| 37 | Other Accounts Receivable | - | - | - | - | |
| 38 | Accumulated Provision for Uncollectable Accounts | - | - | - | - | |
| 39 | Notes Receivable from Associated Companies | - | - | - | - | |
| 40 | Accounts Receivable from Associated Companies | - | - | - | - | |
| 41 | Fuel Stock | 1,071,035 | 1,071,035 | 1,071,035 | 1,071,035 | Line 227 |
| 42 | Plant Materials and Operating Supplies | 141,165,294 | 141,120,033 | 141,120,033 | 124,677,506 | Line 235 |
| 43 | Stores Expense Undistributed | - | - | - | - | |
| 44 | Prepayments | 20,102,841 | 20,265,825 | 20,513,032 | 16,382,615 | Line 243 |
| 45 | Interest and Dividends Receivable | - | - | - | - | |
| 46 | Accrued Utility Revenues | - | - | - | - | |
| 47 | Miscellaneous Current and Accrued Assets | - | - | - | - | |
| 48 | Derivative Instrument Assets | - | - | - | - | |
| 49 | Long-Term Portion of Derivative Instrument Assets | - | - | - | - | |
| 50 | Total Current and Accrued Assets | 166,162,751 | 166,280,474 | 166,527,682 | 145,954,738 | |

| | A | H | I | J | K | L |
|---|---|---|---|---|---|---|
| 1 | **Public Service Company of New Mexico** | | | | | |
| 2 | **Schedule I-1** | | | | | |
| 3 | **Balance Sheet** | | | | | |
| 4 | **Base Period Ending 6/30/2026** | | | | | |
| 5 | **Test Period Ending 9/30/2028** | | | Column I in Test | Column L in Test | |
| 6 | **This schedule is sponsored by PNM Witness Gutierrez** | | | | | |
| 7 | **Description** | **Linkage Ending - COS Model 6/30/2027 Note 2** | **Linkage Ending 9/30/2027 Note 2** | **Test Period Note 2** | **PNM Base Rate Jurisdiction Test Period** | **PNM Exhibit RNG-3 References** |
| 51 | | | | | | |
| 52 | Deferred Debits | | | | | |
| 53 | Unamortized Debt Expenses | - | - | - | - | |
| 54 | Other Regulatory Assets | 161,411,763 | 165,257,828 | 131,698,517 | 130,605,897 | Line 149, 152-158, 160-181, 183 |
| 55 | Preliminary Surveys and Investigation Charges | - | - | - | - | |
| 56 | Clearing Accounts | - | - | - | - | |
| 57 | Miscellaneous Deferred Debits | 237,207,204 | 237,484,234 | 234,575,866 | 179,440,831 | Line 210-211, 213, 216,218, 220 |
| 58 | Unamortized Loss on Reacquired Debt | 3,709,605 | 3,611,658 | 3,219,869 | 2,552,324 | Line 214 |
| 59 | Accumulated Deferred Income Taxes | - | - | - | - | |
| 60 | Total Deferred Debits | 402,328,572 | 406,353,720 | 369,494,252 | 312,599,051 | |
| 61 | Total Assets | 6,059,521,464 | 6,342,454,888 | 6,485,690,869 | 5,114,457,333 | |
| 62 | | | | | | |
| 63 | LIABILITIES AND STOCKHOLDER'S EQUITY | | | | | |
| 64 | Proprietary Capital | | | | | |
| 65 | Common Stock Issued | (2,538,101,084) | (2,688,465,228) | (2,763,581,853) | (2,191,418,978) | |
| 66 | Preferred Stock Issued | (11,529,299) | (8,323,257) | (11,529,299) | (8,323,257) | |
| 67 | Premium on Capital Stock | - | - | - | - | |
| 68 | Other Paid-In Capital | - | - | - | - | |
| 69 | Capital Stock Expense | - | - | - | - | |
| 70 | Retained Earnings | - | - | - | - | |
| 71 | Unappropriated Undistributed Subsidiary Earnings | - | - | - | - | |
| 72 | Accumulated Other Comprehensive Income | - | - | - | - | |
| 73 | Total Proprietary Capital | (2,549,630,383) | (2,696,788,485) | (2,775,111,152) | (2,199,742,235) | |
| 74 | | | | | | |
| 75 | Long-Term Debt | | | | | |
| 76 | Bonds | (2,335,180,154) | (2,469,960,741) | (2,542,699,683) | (2,015,517,065) | |
| 77 | Other Long-Term Debt | - | - | - | - | |
| 78 | Unamortized Discount on Long-Term Debt-Debit | - | - | - | - | |
| 79 | Total Long-Term Debt | (2,335,180,154) | (2,469,960,741) | (2,542,699,683) | (2,015,517,065) | |
| 80 | | | | | | |
| 81 | Other Noncurrent Liabilities | | | | | |
| 82 | Obligations Under Capital Leases - Noncurrent | - | - | - | - | |
| 83 | Accumulated Provision for Injuries and Damages | (3,858,566) | (3,858,566) | (3,858,566) | (3,551,892) | Line 206 |
| 84 | Accumulated Provision for Pensions and Benefits | - | - | - | - | |
| 85 | Long-Term Portion of Derivative Instrument Liabilities | - | - | - | - | |
| 86 | Asset Retirement Obligations | (37,534,208) | (38,082,858) | (40,309,351) | (40,309,351) | Line 202-204 |
| 87 | Total Other Noncurrent Liabilities | (41,392,774) | (41,941,423) | (44,167,917) | (43,861,243) | |

| | A | H | I | J | K | L |
|---|---|---|---|---|---|---|
| 1 | **Public Service Company of New Mexico** | | | | | |
| 2 | **Schedule I-1** | | | | | |
| 3 | **Balance Sheet** | | | | | |
| 4 | **Base Period Ending 6/30/2026** | | | | | |
| 5 | **Test Period Ending 9/30/2028** | | | Column I in Test | Column L in Test | |
| 6 | **This schedule is sponsored by PNM Witness Gutierrez** | | | | | |
| 7 | **Description** | **Linkage Ending - COS Model 6/30/2027 Note 2** | **Linkage Ending 9/30/2027 Note 2** | **Test Period Note 2** | **PNM Base Rate Jurisdiction Test Period** | **PNM Exhibit RNG-3 References** |
| 88 | | | | | | |
| 89 | Current and Accrued Liabilities | | | | | |
| 90 | Notes Payable | - | - | - | - | |
| 91 | Accounts Payable | - | - | - | - | |
| 92 | Accounts Payable to Associated Companies | - | - | - | - | |
| 93 | Customer Deposits | (6,849,111) | (6,849,111) | (6,849,111) | (6,849,111) | Line 195 |
| 94 | Taxes Accrued | - | - | - | - | |
| 95 | Interest Accrued | - | - | - | - | |
| 96 | Dividends Declared | - | - | - | - | |
| 97 | Tax Collections Payable | - | - | - | - | |
| 98 | Miscellaneous Current and Accrued Liabilities | - | - | - | - | |
| 99 | Obligations Under Capital Leases - Current | - | - | - | - | |
| 100 | Derivative Instrument Liabilities | - | - | - | - | |
| 101 | Long-Term Portion of Derivative Instrument Liabilities | - | - | - | - | |
| 102 | Total Current and Accrued Liabilities | (6,849,111) | (6,849,111) | (6,849,111) | (6,849,111) | |
| 103 | | | | | | |
| 104 | Deferred Credits | | | | | |
| 105 | Customer Advances for Construction | - | - | - | - | |
| 106 | Accumulated Deferred Investment Tax Credits | - | - | - | - | |
| 107 | Other Deferred Credits | (62,701,655) | (61,336,330) | (55,598,654) | (7,784,595) | Line 207-209, 212, 215, 217, 219 |
| 108 | Other Regulatory Liabilities | (226,237,754) | (226,520,135) | (220,638,021) | (174,825,472) | Line 150-151, 159, 182, 186-189 |
| 109 | Accumulated Deferred Income Taxes | (837,529,634) | (839,058,663) | (840,626,333) | (665,877,613) | Line 145 |
| 110 | Total Deferred Credits | (1,126,469,043) | (1,126,915,128) | (1,116,863,007) | (848,487,680) | |
| 111 | Total Capitalization and Liabilities | (6,059,521,464) | (6,342,454,888) | (6,485,690,869) | (5,114,457,333) | |
| 112 | | | | | | |
| 113 | | | | | | |
| 114 | Net Cost of Service Rate Base | 4,884,810,536 | 5,166,749,225 | 5,317,810,834 | 4,215,259,299 | Line 251 |

| | A |
|---|---|
| 1 | **Public Service Company of New Mexico** |
| 2 | **Schedule I-1** |
| 3 | **Balance Sheet (Notes)** |
| 4 | **Base Period Ending 6/30/2026** |
| 5 | **Test Period Ending 9/30/2028** |
| 6 | **This schedule is sponsored by PNM Witness Gutierrez** |
| 7 | |
| 8 | Note 1: Reflects removal of balances not requested in rate base in this retail rate case filing |
| 9 | Note 2: Please refer to PNM Exhibit RNG-3 for adjustments to the Base Period and support for the Test Period. Please |
| 10 | refer to PNM Exhibit RNG-4 for supporting work papers and information on linkage data. |
| 11 | Note 3: Pursuant to GAAP PNM recognized the impairment of the assets PNM is not receiving recovery of related to |
| 12 | Four Corners Power Plant, pursuant to the final order in NMPRC Case No. 22-00270-UT. |
| 13 | Note 4: Linkage and Test Period are shown in the net amount based on how information is reported in the Cost of |
| 14 | Service. |
| 15 | Debt and equity are adjusted to balance the Asset and Liabilities and Stockholder's Equity sections of Schedule I-1. The |
| 16 | adjustment based on the capital structure weighting provided in Schedule G-1 |
| 17 | PNM does not forecast non-cost of service items for the linkage and test period in this schedule. PNM has reflected |
| 18 | amounts included in the test period cost of service. |
| 19 | Column B data is from the Base Period historical information from the Company's Book Balance Amounts |

# PNM Schedule I-2

Income statement

| | A | B | C | D |
|---|---|---|---|---|
| 1 | **Public Service Company of New Mexico** | | | |
| 2 | **Schedule I-2** | | | |
| 3 | **Income Statement** | | | |
| 4 | **Base Period Ending 6/30/2026** | | | |
| 5 | **Test Period Ending 9/30/2028** | | | |
| 6 | **This schedule is sponsored by PNM Witness Gutierrez** | | | |
| 7 | | | | |
| 8 | **Description** | **Per Financial Statements 12 months ending 6/30/2026** | **Remove Non-COS Items Note 1** | **COS Reclass and Adjustments Note 2** |
| 9 | Utility Operating Income | | | |
| 10 | Operating Revenues | 1,476,680,224 | - | - |
| 11 | | | | |
| 12 | Operating Expenses | | | |
| 13 | Operating Expenses | 949,573,047 | 4,870,160 | 71,176,445 |
| 14 | Maintenance Expenses | 71,176,445 | - | (71,176,445) |
| 15 | Depreciation Expense | 214,675,367 | 5,180,349 | 1,588,714 |
| 16 | Depreciation Expense for Asset Retirement Costs | 463,677 | - | (463,677) |
| 17 | Amortization of Utility Plant | - | - | - |
| 18 | Amortization of Utility Acquisition Adjustments | 1,125,037 | - | (1,125,037) |
| 19 | Regulatory Debits | 18,369,283 | (1,138,044) | |
| 20 | Regulatory Credits | (1,199,082) | - | 1,199,082 |
| 21 | Taxes Other Than Income Taxes | 60,364,644 | - | |
| 22 | Income Taxes - Federal | (19,743,037) | 26,625,456 | 6,882,419 |
| 23 | Income Taxes - Other | (3,955,434) | - | 3,955,434 |
| 24 | Provision for Deferred Income Taxes | 353,983,178 | - | (353,983,178) |
| 25 | Provision for Deferred Income Taxes - Credit | (342,971,168) | - | 342,971,168 |
| 26 | Investment Tax Credit Adjustment - Net | (174,157) | - | 174,157 |
| 27 | Gains from Disposition of Utility Plant | (152,204) | 152,204 | - |
| 28 | Losses from Disposition of Utility Plant | - | - | - |
| 29 | Gains from Disposition of Allowances | - | - | - |
| 30 | Accretion Expense | 11,508,132 | - | - |
| 31 | Total Operating Expenses | 1,313,043,728 | 35,690,125 | 1,199,082 |
| 32 | | | | |
| 33 | Net Utility Operating Income | 163,636,496 | (35,690,125) | (1,199,082) |
| 34 | | | | |

| | A | B | C | D |
|---|---|---|---|---|
| 1 | **Public Service Company of New Mexico** | | | |
| 2 | **Schedule I-2** | | | |
| 3 | **Income Statement** | | | |
| 4 | **Base Period Ending 6/30/2026** | | | |
| 5 | **Test Period Ending 9/30/2028** | | | |
| 6 | **This schedule is sponsored by PNM Witness Gutierrez** | | | |
| 7 | | | | |
| 8 | **Description** | **Per Financial Statements 12 months ending 6/30/2026** | **Remove Non-COS Items Note 1** | **COS Reclass and Adjustments Note 2** |
| 35 | Other Income and Deductions | | | |
| 36 | Other Income | | | |
| 37 | Revenues from Merchandising, Jobbing, and Contract Work | 2,672,876 | (2,672,876) | - |
| 38 | Costs and Expenses of Merchandising, Jobbing, and Contract Work | (2,665,884) | 2,665,884 | - |
| 39 | Nonoperating Rental Income | - | - | - |
| 40 | Equity in Earnings of Subsidiary Companies | - | - | - |
| 41 | Interest and Dividend Income | 16,749,800 | (16,749,800) | - |
| 42 | Allowance for Other Funds Used During Construction | 12,174,112 | (12,174,112) | - |
| 43 | Miscellaneous Nonoperating Income | 55,816,485 | (55,816,485) | - |
| 44 | Gain on Disposition of Property | 695,009 | (695,009) | - |
| 45 | Total Other Income | 85,442,399 | (85,442,399) | - |
| 46 | | | | |
| 47 | Other Income Deductions | | | |
| 48 | Loss on Disposition of Property | 8,336 | (8,336) | - |
| 49 | Miscellaneous Amortization | 844,446 | (844,446) | - |
| 50 | Donations | 205,117 | (205,117) | - |
| 51 | Penalties | (310,856) | 310,856 | - |
| 52 | Expenses for Certain Civic, Political, and Related Activities | 6,935 | (6,935) | - |
| 53 | Other Deductions | 33,154,544 | (33,154,544) | - |
| 54 | Total Other Income Deductions | 33,908,522 | (33,908,522) | - |
| 55 | | | | |
| 56 | Taxes Applicable to Other Income and Deductions | | | |
| 57 | Taxes Other Than Income Taxes | - | - | - |
| 58 | Income Taxes - Federal | 10,698,960 | (10,698,960) | - |
| 59 | Income Taxes - Other | 2,908,072 | (2,908,072) | - |
| 60 | Provision for Deferred Income Taxes | 36,588,973 | (36,588,973) | - |
| 61 | Provision for Deferred Income Taxes - Credit | (40,490,982) | 40,490,982 | - |

| | A | B | C | D |
|---|---|---|---|---|
| 1 | **Public Service Company of New Mexico** | | | |
| 2 | **Schedule I-2** | | | |
| 3 | **Income Statement** | | | |
| 4 | **Base Period Ending 6/30/2026** | | | |
| 5 | **Test Period Ending 9/30/2028** | | | |
| 6 | **This schedule is sponsored by PNM Witness Gutierrez** | | | |
| 7 | | | | |
| 8 | **Description** | **Per Financial Statements 12 months ending 6/30/2026** | **Remove Non-COS Items Note 1** | **COS Reclass and Adjustments Note 2** |
| 62 | Total Taxes on Other Income and Deductions | 9,705,021 | (9,705,021) | - |
| 63 | | | | |
| 64 | Net Other Income and Deductions | 41,828,855 | (41,828,855) | - |
| 65 | | | | |
| 66 | Interest Charges | | | |
| 67 | Interest on Long-Term Debt | 108,534,143 | (30,478,870) | 18,499,629 |
| 68 | Amortization of Debt Discount and Expense | 1,763,029 | - | (1,763,029) |
| 69 | Amortization of Loss on Reacquired Debt | 391,099 | - | (391,099) |
| 70 | Interest on Debt to Associated Companies | 228,925 | - | (228,925) |
| 71 | Other Interest Expense | 16,116,576 | - | (16,116,576) |
| 72 | Allowance for Borrowed Funds Used During Construction | (13,774,475) | 13,774,475 | - |
| 73 | Net Interest Charges | 113,259,297 | (16,704,395) | (0) |
| 74 | | | | |
| 75 | Income Before Extraordinary Items | 92,206,054 | (60,814,585) | (1,199,082) |
| 76 | | | | |
| 77 | Extraordinary Items | | | |
| 78 | Extraordinary Deductions | - | - | - |
| 79 | Income Taxes - Federal and Other | - | - | - |
| 80 | Extraordinary Items After Taxes | - | - | - |
| 81 | | | | |
| 82 | Net Income | 92,206,054 | (60,814,585) | (1,199,082) |
| 83 | | | | |
| 84 | Total Net Original Cost Rate Base (Rule 530 Schedule I-1, Line 114) | 2,747,463,293 | 2,072,057,621 | - |
| 85 | Common Equity Percentage of Total Capitalization (Rule 530 Schedule A-5) | - | - | - |
| 86 | | | | |
| 87 | | | | |
| 88 | Calculated Return on Equity | - | - | - |

| | A | E | F | G |
|---|---|---|---|---|
| 1 | **Public Service Company of New Mexico** | | | |
| 2 | **Schedule I-2** | | | |
| 3 | **Income Statement** | | | |
| 4 | **Base Period Ending 6/30/2026** | | | |
| 5 | **Test Period Ending 9/30/2028** | | | |
| 6 | **This schedule is sponsored by PNM Witness Gutierrez** | | | |
| 7 | | | | |
| 8 | **Description** | **Total Electric Unadjusted Base Period Cost of Service** | **Base Period Adjustments Note 3** | **Total Adjusted Base Period** |
| 9 | Utility Operating Income | | | |
| 10 | Operating Revenues | 1,476,680,224 | (192,117,370) | 1,284,562,854 |
| 11 | | | | |
| 12 | Operating Expenses | | | |
| 13 | Operating Expenses | 1,025,619,652 | (295,774,717) | 729,844,935 |
| 14 | Maintenance Expenses | - | - | - |
| 15 | Depreciation Expense | 221,444,430 | 50,673,146 | 272,117,576 |
| 16 | Depreciation Expense for Asset Retirement Costs | - | - | - |
| 17 | Amortization of Utility Plant | - | - | - |
| 18 | Amortization of Utility Acquisition Adjustments | - | - | - |
| 19 | Regulatory Debits | 17,231,239 | - | 17,231,239 |
| 20 | Regulatory Credits | - | - | - |
| 21 | Taxes Other Than Income Taxes | 60,364,644 | (2,417,344) | 57,947,300 |
| 22 | Income Taxes - Federal | 13,764,837 | 18,055,903 | 31,820,741 |
| 23 | Income Taxes - Other | - | - | - |
| 24 | Provision for Deferred Income Taxes | - | - | - |
| 25 | Provision for Deferred Income Taxes - Credit | - | - | - |
| 26 | Investment Tax Credit Adjustment - Net | - | - | - |
| 27 | Gains from Disposition of Utility Plant | - | - | - |
| 28 | Losses from Disposition of Utility Plant | - | - | - |
| 29 | Gains from Disposition of Allowances | - | - | - |
| 30 | Accretion Expense | 11,508,132 | (8,267,535) | 3,240,597 |
| 31 | Total Operating Expenses | 1,349,932,934 | (237,730,547) | 1,112,202,388 |
| 32 | | | | |
| 33 | Net Utility Operating Income | 126,747,289 | 45,613,177 | 172,360,466 |
| 34 | | | | |

| | A | E | F | G |
|---|---|---|---|---|
| 1 | **Public Service Company of New Mexico** | | | |
| 2 | **Schedule I-2** | | | |
| 3 | **Income Statement** | | | |
| 4 | **Base Period Ending 6/30/2026** | | | |
| 5 | **Test Period Ending 9/30/2028** | | | |
| 6 | **This schedule is sponsored by PNM Witness Gutierrez** | | | |
| 7 | | | | |
| 8 | **Description** | **Total Electric Unadjusted Base Period Cost of Service** | **Base Period Adjustments Note 3** | **Total Adjusted Base Period** |
| 35 | Other Income and Deductions | | | |
| 36 | Other Income | | | |
| 37 | Revenues from Merchandising, Jobbing, and Contract Work | - | - | - |
| 38 | Costs and Expenses of Merchandising, Jobbing, and Contract Work | - | - | - |
| 39 | Nonoperating Rental Income | - | - | - |
| 40 | Equity in Earnings of Subsidiary Companies | - | - | - |
| 41 | Interest and Dividend Income | - | - | - |
| 42 | Allowance for Other Funds Used During Construction | - | - | - |
| 43 | Miscellaneous Nonoperating Income | - | - | - |
| 44 | Gain on Disposition of Property | - | - | - |
| 45 | Total Other Income | - | - | - |
| 46 | | | | |
| 47 | Other Income Deductions | | | |
| 48 | Loss on Disposition of Property | - | - | - |
| 49 | Miscellaneous Amortization | - | - | - |
| 50 | Donations | - | - | - |
| 51 | Penalties | - | - | - |
| 52 | Expenses for Certain Civic, Political, and Related Activities | - | - | - |
| 53 | Other Deductions | - | - | - |
| 54 | Total Other Income Deductions | - | - | - |
| 55 | | | | |
| 56 | Taxes Applicable to Other Income and Deductions | | | |
| 57 | Taxes Other Than Income Taxes | - | - | - |
| 58 | Income Taxes - Federal | - | - | - |
| 59 | Income Taxes - Other | - | - | - |
| 60 | Provision for Deferred Income Taxes | - | - | - |
| 61 | Provision for Deferred Income Taxes - Credit | - | - | - |

| | A | E | F | G |
|---|---|---|---|---|
| 1 | **Public Service Company of New Mexico** | | | |
| 2 | **Schedule I-2** | | | |
| 3 | **Income Statement** | | | |
| 4 | **Base Period Ending 6/30/2026** | | | |
| 5 | **Test Period Ending 9/30/2028** | | | |
| 6 | **This schedule is sponsored by PNM Witness Gutierrez** | | | |
| 7 | | | | |
| 8 | **Description** | **Total Electric Unadjusted Base Period Cost of Service** | **Base Period Adjustments Note 3** | **Total Adjusted Base Period** |
| 62 | Total Taxes on Other Income and Deductions | - | - | - |
| 63 | | | | |
| 64 | Net Other Income and Deductions | - | - | - |
| 65 | | | | |
| 66 | Interest Charges | | | |
| 67 | Interest on Long-Term Debt | 96,554,902 | (7,417,154) | 89,137,749 |
| 68 | Amortization of Debt Discount and Expense | - | - | - |
| 69 | Amortization of Loss on Reacquired Debt | - | - | - |
| 70 | Interest on Debt to Associated Companies | - | - | - |
| 71 | Other Interest Expense | - | - | - |
| 72 | Allowance for Borrowed Funds Used During Construction | - | - | - |
| 73 | Net Interest Charges | 96,554,902 | (7,417,154) | 89,137,749 |
| 74 | | | | |
| 75 | Income Before Extraordinary Items | 30,192,387 | 53,030,331 | 83,222,718 |
| 76 | | | | |
| 77 | Extraordinary Items | | | |
| 78 | Extraordinary Deductions | - | - | - |
| 79 | Income Taxes - Federal and Other | - | - | - |
| 80 | Extraordinary Items After Taxes | - | - | - |
| 81 | | | | |
| 82 | Net Income | 30,192,387 | 53,030,331 | 83,222,718 |
| 83 | | | | |
| 84 | Total Net Original Cost Rate Base (Rule 530 Schedule I-1, Line 114) | 4,819,520,914 | (370,225,920) | 4,449,294,994 |
| 85 | Common Equity Percentage of Total Capitalization (Rule 530 Schedule A-5) | 53.11% | - | 53.11% |
| 86 | | 2,559,602,364 | | 2,362,978,849 |
| 87 | | | | |
| 88 | Calculated Return on Equity | 1.18% | - | 3.52% |

| | A | H | I | J |
|---|---|---|---|---|
| 1 | **Public Service Company of New Mexico** | | | |
| 2 | **Schedule I-2** | | | |
| 3 | **Income Statement** | | | |
| 4 | **Base Period Ending 6/30/2026** | | | |
| 5 | **Test Period Ending 9/30/2028** | | | |
| 6 | **This schedule is sponsored by PNM Witness Gutierrez** | | | |
| 7 | | | | |
| 8 | **Description** | **PNM Base Rate Jurisdiction Adjusted Base Period** | **Linkage 1 Jul-26 - Jun-27 Note 3** | **Linkage 2 Oct-26 - Sep-27 Note 3** |
| 9 | Utility Operating Income | | | |
| 10 | Operating Revenues | 1,251,366,992 | 1,327,337,534 | 1,478,944,048 |
| 11 | | | | |
| 12 | Operating Expenses | | | |
| 13 | Operating Expenses | 661,762,751 | 709,803,941 | 733,253,574 |
| 14 | Maintenance Expenses | - | - | - |
| 15 | Depreciation Expense | 221,342,810 | 265,201,416 | 271,028,590 |
| 16 | Depreciation Expense for Asset Retirement Costs | - | - | - |
| 17 | Amortization of Utility Plant | - | - | - |
| 18 | Amortization of Utility Acquisition Adjustments | - | - | - |
| 19 | Regulatory Debits | 17,231,239 | 18,679,690 | 16,150,584 |
| 20 | Regulatory Credits | - | - | - |
| 21 | Taxes Other Than Income Taxes | 44,822,703 | 59,499,261 | 63,841,436 |
| 22 | Income Taxes - Federal | 64,716,241 | 42,459,061 | 45,814,572 |
| 23 | Income Taxes - Other | - | - | - |
| 24 | Provision for Deferred Income Taxes | - | - | - |
| 25 | Provision for Deferred Income Taxes - Credit | - | - | - |
| 26 | Investment Tax Credit Adjustment - Net | - | - | - |
| 27 | Gains from Disposition of Utility Plant | - | - | - |
| 28 | Losses from Disposition of Utility Plant | - | - | - |
| 29 | Gains from Disposition of Allowances | - | - | - |
| 30 | Accretion Expense | 3,240,597 | 2,187,828 | 2,199,634 |
| 31 | Total Operating Expenses | 1,013,116,341 | 1,097,831,197 | 1,132,288,390 |
| 32 | | | | |
| 33 | Net Utility Operating Income | 238,250,651 | 229,506,337 | 346,655,658 |
| 34 | | | | |

| | A | H | I | J |
|---|---|---|---|---|
| 1 | **Public Service Company of New Mexico** | | | |
| 2 | **Schedule I-2** | | | |
| 3 | **Income Statement** | | | |
| 4 | **Base Period Ending 6/30/2026** | | | |
| 5 | **Test Period Ending 9/30/2028** | | | |
| 6 | **This schedule is sponsored by PNM Witness Gutierrez** | | | |
| 7 | | | | |
| 8 | **Description** | **PNM Base Rate Jurisdiction Adjusted Base Period** | **Linkage 1 Jul-26 - Jun-27 Note 3** | **Linkage 2 Oct-26 - Sep-27 Note 3** |
| 35 | Other Income and Deductions | | | |
| 36 | Other Income | | | |
| 37 | Revenues from Merchandising, Jobbing, and Contract Work | - | - | - |
| 38 | Costs and Expenses of Merchandising, Jobbing, and Contract Work | - | - | - |
| 39 | Nonoperating Rental Income | - | - | - |
| 40 | Equity in Earnings of Subsidiary Companies | - | - | - |
| 41 | Interest and Dividend Income | - | - | - |
| 42 | Allowance for Other Funds Used During Construction | - | - | - |
| 43 | Miscellaneous Nonoperating Income | - | - | - |
| 44 | Gain on Disposition of Property | - | - | - |
| 45 | Total Other Income | - | - | - |
| 46 | | | | |
| 47 | Other Income Deductions | | | |
| 48 | Loss on Disposition of Property | - | - | - |
| 49 | Miscellaneous Amortization | - | - | - |
| 50 | Donations | - | - | - |
| 51 | Penalties | - | - | - |
| 52 | Expenses for Certain Civic, Political, and Related Activities | - | - | - |
| 53 | Other Deductions | - | - | - |
| 54 | Total Other Income Deductions | - | - | - |
| 55 | | | | |
| 56 | Taxes Applicable to Other Income and Deductions | | | |
| 57 | Taxes Other Than Income Taxes | - | - | - |
| 58 | Income Taxes - Federal | - | - | - |
| 59 | Income Taxes - Other | - | - | - |
| 60 | Provision for Deferred Income Taxes | - | - | - |
| 61 | Provision for Deferred Income Taxes - Credit | - | - | - |

| | A | H | I | J |
|---|---|---|---|---|
| 1 | **Public Service Company of New Mexico** | | | |
| 2 | **Schedule I-2** | | | |
| 3 | **Income Statement** | | | |
| 4 | **Base Period Ending 6/30/2026** | | | |
| 5 | **Test Period Ending 9/30/2028** | | | |
| 6 | **This schedule is sponsored by PNM Witness Gutierrez** | | | |
| 7 | | | | |
| 8 | **Description** | **PNM Base Rate Jurisdiction Adjusted Base Period** | **Linkage 1 Jul-26 - Jun-27 Note 3** | **Linkage 2 Oct-26 - Sep-27 Note 3** |
| 62 | Total Taxes on Other Income and Deductions | - | - | - |
| 63 | | | | |
| 64 | Net Other Income and Deductions | - | - | - |
| 65 | | | | |
| 66 | Interest Charges | | | |
| 67 | Interest on Long-Term Debt | 68,994,331 | 113,097,003 | 119,624,670 |
| 68 | Amortization of Debt Discount and Expense | - | - | - |
| 69 | Amortization of Loss on Reacquired Debt | - | - | - |
| 70 | Interest on Debt to Associated Companies | - | - | - |
| 71 | Other Interest Expense | - | - | - |
| 72 | Allowance for Borrowed Funds Used During Construction | - | - | - |
| 73 | Net Interest Charges | 68,994,331 | 113,097,003 | 119,624,670 |
| 74 | | | | |
| 75 | Income Before Extraordinary Items | 169,256,320 | 116,409,334 | 227,030,988 |
| 76 | | | | |
| 77 | Extraordinary Items | | | |
| 78 | Extraordinary Deductions | - | - | - |
| 79 | Income Taxes - Federal and Other | - | - | - |
| 80 | Extraordinary Items After Taxes | - | - | - |
| 81 | | | | |
| 82 | Net Income | 169,256,320 | 116,409,334 | 227,030,988 |
| 83 | | | | |
| 84 | Total Net Original Cost Rate Base (Rule 530 Schedule I-1, Line 114) | 3,443,839,870 | 4,884,810,536 | 5,166,749,225 |
| 85 | Common Equity Percentage of Total Capitalization (Rule 530 Schedule A-5) | 53.11% | 52.00% | 52.00% |
| 86 | | 1,828,991,061 | 2,540,101,357 | 2,686,709,468 |
| 87 | | | | |
| 88 | Calculated Return on Equity | 9.25% | 4.58% | 8.45% |

| | A | K | L | M |
|---|---|---|---|---|
| 1 | **Public Service Company of New Mexico** | | | |
| 2 | **Schedule I-2** | | | |
| 3 | **Income Statement** | | | |
| 4 | **Base Period Ending 6/30/2026** | | | |
| 5 | **Test Period Ending 9/30/2028** | | | |
| 6 | **This schedule is sponsored by PNM Witness Gutierrez** | | | |
| 7 | | | | |
| 8 | **Description** | **Total Test Period Note 3** | **PNM Base Rate Jurisdiction Adjusted Test Period** | **PNM Exhibit RNG-3 References** |
| 9 | Utility Operating Income | | | |
| 10 | Operating Revenues | 1,627,374,125 | 1,385,851,503 | |
| 11 | | | | |
| 12 | Operating Expenses | | | |
| 13 | Operating Expenses | 932,436,223 | 862,591,202 | Line 268, 444 |
| 14 | Maintenance Expenses | - | - | |
| 15 | Depreciation Expense | 319,091,540 | 264,866,450 | Line 492 |
| 16 | Depreciation Expense for Asset Retirement Costs | - | - | |
| 17 | Amortization of Utility Plant | - | - | |
| 18 | Amortization of Utility Acquisition Adjustments | - | - | |
| 19 | Regulatory Debits | 27,867,860 | 27,447,431 | Line 575-604 |
| 20 | Regulatory Credits | - | - | |
| 21 | Taxes Other Than Income Taxes | 68,096,507 | 53,025,427 | Line 565 |
| 22 | Income Taxes - Federal | 49,442,687 | 33,247,801 | Line 694, 696 |
| 23 | Income Taxes - Other | - | - | |
| 24 | Provision for Deferred Income Taxes | - | - | |
| 25 | Provision for Deferred Income Taxes - Credit | - | - | |
| 26 | Investment Tax Credit Adjustment - Net | - | - | |
| 27 | Gains from Disposition of Utility Plant | - | - | |
| 28 | Losses from Disposition of Utility Plant | - | - | |
| 29 | Gains from Disposition of Allowances | - | - | |
| 30 | Accretion Expense | 2,255,408 | 2,255,408 | Line 571-573 |
| 31 | Total Operating Expenses | 1,399,190,225 | 1,243,433,720 | |
| 32 | | | | |
| 33 | Net Utility Operating Income | 228,183,900 | 142,417,784 | |
| 34 | | | | |

| | A | K | L | M |
|---|---|---|---|---|
| 1 | **Public Service Company of New Mexico** | | | |
| 2 | **Schedule I-2** | | | |
| 3 | **Income Statement** | | | |
| 4 | **Base Period Ending 6/30/2026** | | | |
| 5 | **Test Period Ending 9/30/2028** | | | |
| 6 | **This schedule is sponsored by PNM Witness Gutierrez** | | | |
| 7 | | | | |
| 8 | **Description** | **Total Test Period Note 3** | **PNM Base Rate Jurisdiction Adjusted Test Period** | **PNM Exhibit RNG-3 References** |
| 35 | Other Income and Deductions | | | |
| 36 | Other Income | | | |
| 37 | Revenues from Merchandising, Jobbing, and Contract Work | - | - | |
| 38 | Costs and Expenses of Merchandising, Jobbing, and Contract Work | - | - | |
| 39 | Nonoperating Rental Income | - | - | |
| 40 | Equity in Earnings of Subsidiary Companies | - | - | |
| 41 | Interest and Dividend Income | - | - | |
| 42 | Allowance for Other Funds Used During Construction | - | - | |
| 43 | Miscellaneous Nonoperating Income | - | - | |
| 44 | Gain on Disposition of Property | - | - | |
| 45 | Total Other Income | - | - | |
| 46 | | | | |
| 47 | Other Income Deductions | | | |
| 48 | Loss on Disposition of Property | - | - | |
| 49 | Miscellaneous Amortization | - | - | |
| 50 | Donations | - | - | |
| 51 | Penalties | - | - | |
| 52 | Expenses for Certain Civic, Political, and Related Activities | - | - | |
| 53 | Other Deductions | - | - | |
| 54 | Total Other Income Deductions | - | - | |
| 55 | | | | |
| 56 | Taxes Applicable to Other Income and Deductions | | | |
| 57 | Taxes Other Than Income Taxes | - | - | |
| 58 | Income Taxes - Federal | - | - | |
| 59 | Income Taxes - Other | - | - | |
| 60 | Provision for Deferred Income Taxes | - | - | |
| 61 | Provision for Deferred Income Taxes - Credit | - | - | |

| | A | K | L | M |
|---|---|---|---|---|
| 1 | **Public Service Company of New Mexico** | | | |
| 2 | **Schedule I-2** | | | |
| 3 | **Income Statement** | | | |
| 4 | **Base Period Ending 6/30/2026** | | | |
| 5 | **Test Period Ending 9/30/2028** | | | |
| 6 | **This schedule is sponsored by PNM Witness Gutierrez** | | | |
| 7 | | | | |
| 8 | **Description** | **Total Test Period Note 3** | **PNM Base Rate Jurisdiction Adjusted Test Period** | **PNM Exhibit RNG-3 References** |
| 62 | Total Taxes on Other Income and Deductions | - | - | |
| 63 | | | | |
| 64 | Net Other Income and Deductions | - | - | |
| 65 | | | | |
| 66 | Interest Charges | | | |
| 67 | Interest on Long-Term Debt | 126,372,174 | 100,171,198 | Line 618 |
| 68 | Amortization of Debt Discount and Expense | - | - | |
| 69 | Amortization of Loss on Reacquired Debt | - | - | |
| 70 | Interest on Debt to Associated Companies | - | - | |
| 71 | Other Interest Expense | - | - | |
| 72 | Allowance for Borrowed Funds Used During Construction | - | - | |
| 73 | Net Interest Charges | 126,372,174 | 100,171,198 | |
| 74 | | | | |
| 75 | Income Before Extraordinary Items | 101,811,726 | 42,246,586 | |
| 76 | | | | |
| 77 | Extraordinary Items | | | |
| 78 | Extraordinary Deductions | - | - | |
| 79 | Income Taxes - Federal and Other | - | - | |
| 80 | Extraordinary Items After Taxes | - | - | |
| 81 | | | | |
| 82 | Net Income | 101,811,726 | 42,246,586 | |
| 83 | | | | |
| 84 | Total Net Original Cost Rate Base (Rule 530 Schedule I-1, Line 114) | 5,317,810,834 | 4,215,259,299 | Line 251 |
| 85 | Common Equity Percentage of Total Capitalization (Rule 530 Schedule A-5) | 52.00% | 52.00% | |
| 86 | | 2,765,261,501 | 2,191,934,730 | |
| 87 | | | | |
| 88 | Calculated Return on Equity | 3.68% | 1.93% | |

| | A |
|---|---|
| 1 | **Public Service Company of New Mexico** |
| 2 | **Schedule I-2** |
| 3 | **Income Statement (Notes)** |
| 4 | **Base Period Ending 6/30/2026** |
| 5 | **Test Period Ending 9/30/2028** |
| 6 | **This schedule is sponsored by PNM Witness Gutierrez** |
| 7 | |
| 8 | PNM does not forecast non-cost of service items for the linkage and test period in this schedule. PNM has reflected |
| 9 | amounts included in the test period cost of service in this proceeding. |
| 10 | Note 1: Reflects the removal of items that are not included in a general rate case, including Other Income and |
| 11 | Deductions and Extraordinary Items. |
| 12 | Note 2: PNM reclassified line items to present the Rule 530 schedule I-2 in a cost of service format. |
| 13 | Note 3: Please refer to PNM Exhibit RNG-3 for adjustments to the Base Period and support for the Test Period. Please |
| 14 | refer to PNM Exhibit RNG-4 for supporting workpapers and information on linkage data. |
| 15 | Column B data is from the Base Period historical information from the Company's Book Balance Amounts |

# PNM Schedule I-3

Statement of changes in financial position

| | A | B | C | D | E |
|---|---|---|---|---|---|
| 1 | **Public Service Company of New Mexico** | | | | |
| 2 | **Schedule I-3** | | | | |
| 3 | **Statement of Cash Flows** | | | | |
| 4 | **Base Period Ending 6/30/2026** | | | | |
| 5 | **Test Period Ending 9/30/2028** | | | | |
| 6 | **This schedule is sponsored by PNM Witness Gutierrez** | | | | |
| 7 | | | | | |
| 8 | **Description** | **Per Financial Statements 12 months ending 6/30/2026** | **Adjustments to Base Period** | **Adjusted Base Period** | **Test Period** |
| 9 | | | | | |
| 10 | **Net Cash Flow from Operating Activities:** | | | | |
| 11 | Net Income | 92,206,054 | | 92,206,054 | (101,811,726) |
| 12 | Noncash Charges (Credits) to Income: | | | | |
| 13 | Depreciation and depletion | 227,772,215 | | 227,772,215 | 321,346,948 |
| 14 | Realized (Gain)/Loss on investment securities | (27,905,545) | | (27,905,545) | |
| 15 | Amortization of Regulatory Assets and Liabilities | 18,369,283 | | 18,369,283 | |
| 16 | Nuclear Fuel | 15,342,950 | | 15,342,950 | 19,306,622 |
| 17 | Deferred Income Taxes (Net) | 7,110,000 | | 7,110,000 | 49,442,687 |
| 18 | Investment Tax Credit Adjustment (Net) | (174,157) | | (174,157) | |
| 19 | Net (Increase) Decrease in Receivables | 1,601,414 | | 1,601,414 | |
| 20 | Net (Increase) Decrease in Inventory | (1,511,963) | | (1,511,963) | |
| 21 | Net (Increase) Decrease in Payables and Accrued Expenses | 38,362,253 | | 38,362,253 | |
| 22 | Net (Increase) Decrease in Other Regulatory Assets | 2,527,477 | | 2,527,477 | 33,559,311 |
| 23 | Net Increase (Decrease) in Other Regulatory Liabilities | 2,239,467 | | 2,239,467 | (5,882,114) |
| 24 | Allowance for Funds Used During Construction | (12,174,113) | | (12,174,113) | |
| 25 | Undistributed Earnings from Subsidiary Companies | - | | - | |
| 26 | Other: Other Operating Activities | 58,768,000 | | 58,768,000 | |
| 27 | Amortization of Debt Premium, Discount, and Expense | 2,620,046 | | 2,620,046 | |

| | A | B | C | D | E |
|---|---|---|---|---|---|
| 1 | **Public Service Company of New Mexico** | | | | |
| 2 | **Schedule I-3** | | | | |
| 3 | **Statement of Cash Flows** | | | | |
| 4 | **Base Period Ending 6/30/2026** | | | | |
| 5 | **Test Period Ending 9/30/2028** | | | | |
| 6 | **This schedule is sponsored by PNM Witness Gutierrez** | | | | |
| 7 | | | | | |
| 8 | **Description** | **Per Financial Statements 12 months ending 6/30/2026** | **Adjustments to Base Period** | **Adjusted Base Period** | **Test Period** |
| 28 | Amortization of Rights-of-way | 7,183,901 | | 7,183,901 | |
| 29 | (Gains)/Losses on Mark-to-market Investments | | | - | |
| 30 | Change in Intercompany | 5,808,900 | | 5,808,900 | |
| 31 | Provision for Uncollectible Accounts | 5,295,577 | | 5,295,577 | |
| 32 | Regulatory disallowances and restructuring costs | (730,972) | | (730,972) | |
| 33 | (Gain)/Loss on Disposition of Property | (152,229) | | (152,229) | |
| 34 | Net Change in Deferred Charges | (30,974,416) | | (30,974,416) | 2,908,368 |
| 35 | Net Change in Deferred Credits | (8,630,432) | | (8,630,432) | (5,737,676) |
| 36 | Net Change in Current Assets and Liabilities | 3,682,240 | | 3,682,240 | |
| 37 | | | | | |
| 38 | Net Cash Provided by Operating Activities | 406,635,950 | - | 406,635,950 | 313,132,420 |
| 39 | | | | | |
| 40 | **Cash Flows from Investment Activities:** | | | | |
| 41 | Gross Additions to Utility Plant | (602,249,897) | | (602,249,897) | (540,923,375) |
| 42 | Gross Additions to Nuclear Fuel | (16,393,539) | | (16,393,539) | (20,019,324) |
| 43 | Allowance for Other Funds Used During Construction | (12,174,113) | | (12,174,113) | 26,876,939 |
| 44 | Cash Outflows for Plant | (630,817,549) | | (630,817,549) | (534,065,761) |
| 45 | Proceeds from disposal of non-current asset | - | | - | |
| 46 | Investments in and Advances to Assoc Companies | 0 | | 0 | |
| 47 | Other Investing Income | 18,238 | | 18,238 | |
| 48 | Purchase of Investment Securities | (846,433,615) | | (846,433,615) | |
| 49 | Proceeds from Sales of Investment Securities | 824,221,945 | | 824,221,945 | |
| 50 | Capital Trust Notes Return of Principal | - | | - | |
| 51 | Special Deposits | - | | - | |
| 52 | | | | | |
| 53 | Net Cash Used in Investing Activities | (653,010,981) | - | (653,010,981) | (534,065,761) |

| | A | B | C | D | E |
|---|---|---|---|---|---|
| 1 | **Public Service Company of New Mexico** | | | | |
| 2 | **Schedule I-3** | | | | |
| 3 | **Statement of Cash Flows** | | | | |
| 4 | **Base Period Ending 6/30/2026** | | | | |
| 5 | **Test Period Ending 9/30/2028** | | | | |
| 6 | **This schedule is sponsored by PNM Witness Gutierrez** | | | | |
| 7 | | | | | |
| 8 | **Description** | **Per Financial Statements 12 months ending 6/30/2026** | **Adjustments to Base Period** | **Adjusted Base Period** | **Test Period** |
| 54 | | | | | |
| 55 | **Cash Flows From Financing Activities:** | | | | |
| 56 | Proceeds from Issuance of Long-Term Debt | 470,000,000 | | 470,000,000 | 373,125,000 |
| 57 | Payments for Retirement of Long-Term Debt | (450,000,000) | | (450,000,000) | |
| 58 | Equity Contribution from Parent | 228,300,000 | | 228,300,000 | 404,218,710 |
| 59 | Other: Other Financing Activities | | | - | |
| 60 | Debt Issuance Costs and Other | (5,414,130) | | (5,414,130) | |
| 61 | Proceeds from Transmission Interconnection Arrangements | 43,559,512 | | 43,559,512 | |
| 62 | Repayments from Transmission Interconnection Arrangements | (19,103,741) | | (19,103,741) | |
| 63 | Net Decrease/Increase in Short-Term Debt | (19,600,000) | | (19,600,000) | |
| 64 | Net Decrease in Affiliated Short-Term Debt | - | | - | |
| 65 | Dividends on Preferred Stock | (528,042) | | (528,042) | (528,042) |
| 66 | Dividends on Common Stock | - | | - | 101,811,726 |
| 67 | Net cash flows from financing activities | 247,213,599 | - | 247,213,599 | 878,627,393 |
| 68 | | | | | |
| 69 | **Change in Cash and Cash Equivalents** | 838,568 | - | 838,568 | 657,694,053 |
| 70 | **Cash and Cash Equivalents Beginning of Period** | 18,725 | | 18,725 | 857,293 |
| 71 | **Cash and Cash Equivalents End of Period** | 857,293 | - | 857,293 | 658,551,346 |

| | A | F | G |
|---|---|---|---|
| 1 | **Public Service Company of New Mexico** | | |
| 2 | **Schedule I-3** | | |
| 3 | **Statement of Cash Flows** | | |
| 4 | **Base Period Ending 6/30/2026** | | |
| 5 | **Test Period Ending 9/30/2028** | | |
| 6 | **This schedule is sponsored by PNM Witness Gutierrez** | | |
| 7 | | | |
| 8 | **Description** | **Variance from Adjusted Base Period to Adjusted Test Period** | **Reference** |
| 9 | | | |
| 10 | **Net Cash Flow from Operating Activities:** | | |
| 11 | Net Income | (194,017,780) | 530 Schedule I-2, line 82 |
| 12 | Noncash Charges (Credits) to Income: | | |
| 13 | Depreciation and depletion | 93,574,733 | 530 Schedule I-2, line 15, 16,17, 18, 30 |
| 14 | Realized (Gain)/Loss on investment securities | 27,905,545 | |
| 15 | Amortization of Regulatory Assets and Liabilities | (18,369,283) | |
| 16 | Nuclear Fuel | 3,963,672 | PNM Exhibit RNG-3, line 260 |
| 17 | Deferred Income Taxes (Net) | 42,332,687 | 530 Schedule I-2, line 21 |
| 18 | Investment Tax Credit Adjustment (Net) | 174,157 | |
| 19 | Net (Increase) Decrease in Receivables | (1,601,414) | |
| 20 | Net (Increase) Decrease in Inventory | 1,511,963 | |
| 21 | Net (Increase) Decrease in Payables and Accrued Expenses | (38,362,253) | |
| 22 | Net (Increase) Decrease in Other Regulatory Assets | 31,031,834 | 530 Schedule I-1, line 54 |
| 23 | Net Increase (Decrease) in Other Regulatory Liabilities | (8,121,581) | 530 Schedule I-1, line 108 |
| 24 | Allowance for Funds Used During Construction | 12,174,113 | |
| 25 | Undistributed Earnings from Subsidiary Companies | - | |
| 26 | Other: Other Operating Activities | (58,768,000) | |
| 27 | Amortization of Debt Premium, Discount, and Expense | (2,620,046) | |

| | A | F | G |
|---|---|---|---|
| 1 | **Public Service Company of New Mexico** | | |
| 2 | **Schedule I-3** | | |
| 3 | **Statement of Cash Flows** | | |
| 4 | **Base Period Ending 6/30/2026** | | |
| 5 | **Test Period Ending 9/30/2028** | | |
| 6 | **This schedule is sponsored by PNM Witness Gutierrez** | | |
| 7 | | | |
| 8 | **Description** | **Variance from Adjusted Base Period to Adjusted Test Period** | **Reference** |
| 28 | Amortization of Rights-of-way | (7,183,901) | |
| 29 | (Gains)/Losses on Mark-to-market Investments | - | |
| 30 | Change in Intercompany | (5,808,900) | |
| 31 | Provision for Uncollectible Accounts | (5,295,577) | |
| 32 | Regulatory disallowances and restructuring costs | 730,972 | |
| 33 | (Gain)/Loss on Disposition of Property | 152,229 | |
| 34 | Net Change in Deferred Charges | 33,882,784 | 530 Schedule I-1, line 57 |
| 35 | Net Change in Deferred Credits | 2,892,756 | 530 Schedule I-1, line 107 |
| 36 | Net Change in Current Assets and Liabilities | (3,682,240) | |
| 37 | | | |
| 38 | Net Cash Provided by Operating Activities | (93,503,530) | |
| 39 | | | |
| 40 | **Cash Flows from Investment Activities:** | | |
| 41 | Gross Additions to Utility Plant | 61,326,522 | PNM Exhibit RNG-4, WP Plant-2 & WP Plant-5 |
| 42 | Gross Additions to Nuclear Fuel | (3,625,785) | PNM Exhibit RNG-4, WP Working Capital, B-7 |
| 43 | Allowance for Other Funds Used During Construction | 39,051,052 | PNM Exhibit RNG-3, line 627-629 |
| 44 | Cash Outflows for Plant | 96,751,788 | |
| 45 | Proceeds from disposal of non-current asset | - | |
| 46 | Investments in and Advances to Assoc Companies | (0) | |
| 47 | Other Investing Income | (18,238) | |
| 48 | Purchase of Investment Securities | 846,433,615 | |
| 49 | Proceeds from Sales of Investment Securities | (824,221,945) | |
| 50 | Capital Trust Notes Return of Principal | - | |
| 51 | Special Deposits | - | |
| 52 | | | |
| 53 | Net Cash Used in Investing Activities | 118,945,220 | |

| | A | F | G |
|---|---|---|---|
| 1 | **Public Service Company of New Mexico** | | |
| 2 | **Schedule I-3** | | |
| 3 | **Statement of Cash Flows** | | |
| 4 | **Base Period Ending 6/30/2026** | | |
| 5 | **Test Period Ending 9/30/2028** | | |
| 6 | **This schedule is sponsored by PNM Witness Gutierrez** | | |
| 7 | | | |
| 8 | **Description** | **Variance from Adjusted Base Period to Adjusted Test Period** | **Reference** |
| 54 | | | |
| 55 | **Cash Flows From Financing Activities:** | | |
| 56 | Proceeds from Issuance of Long-Term Debt | (96,875,000) | 530 Schedule G-3 Test |
| 57 | Payments for Retirement of Long-Term Debt | 450,000,000 | |
| 58 | Equity Contribution from Parent | 175,918,710 | |
| 59 | Other: Other Financing Activities | - | |
| 60 | Debt Issuance Costs and Other | 5,414,130 | |
| 61 | Proceeds from Transmission Interconnection Arrangements | (43,559,512) | |
| 62 | Repayments from Transmission Interconnection Arrangements | 19,103,741 | |
| 63 | Net Decrease/Increase in Short-Term Debt | 19,600,000 | |
| 64 | Net Decrease in Affiliated Short-Term Debt | - | |
| 65 | Dividends on Preferred Stock | - | |
| 66 | Dividends on Common Stock | 101,811,726 | |
| 67 | Net cash flows from financing activities | 631,413,794 | |
| 68 | | | |
| 69 | **Change in Cash and Cash Equivalents** | 656,855,484 | |
| 70 | **Cash and Cash Equivalents Beginning of Period** | 838,568 | |
| 71 | **Cash and Cash Equivalents End of Period** | 657,694,053 | |

| | A |
|---|---|
| 1 | **Public Service Company of New Mexico** |
| 2 | **Schedule I-3** |
| 3 | **Statement of Cash Flows (Notes)** |
| 4 | **Base Period Ending 6/30/2026** |
| 5 | **Test Period Ending 9/30/2028** |
| 6 | **This schedule is sponsored by PNM Witness Gutierrez** |
| 7 | |
| 8 | Please refer to the Rule 530 I-1 and Rule 530 I-2 schedule, and PNM Exhibits RNG-3 and RNG-4 for supporting information. |
| 9 | The statement of cash flows reflects the cost of service for PNM in the test period, which assumes a full year of |
| 10 | revenues as reflected in the cost of service study in the test period. This results in an additional amount of dividend |
| 11 | to PNM Resources in the test period. |
| 12 | PNM does not forecast non-cost of service items for the linkage and test period in this schedule as shown in |
| 13 | Column F, line 63. |
| 14 | PNM has reflected amounts included in the test period cost of service in the above schedule. |
| 15 | Column B data is from the Base Period historical information from the Company's Book Balance Amounts |

Construction program and sources of construction funds

# PNM J Series Schedules

Schedule J-1: Construction program

Schedule J-2: Sources of construction funds

# PNM Schedule J-1

Construction program

| | A | B | C | D | E | F |
|---|---|---|---|---|---|---|
| 1 | **Public Service Company of New Mexico** | | | | | |
| 2 | **Schedule J-1** | | | | | |
| 3 | **Construction Program** | | | | | |
| 4 | **Base Period Ending 6/30/2026** | | | | | |
| 5 | **Test Period Ending 9/30/2028** | | | | | |
| 6 | **This schedule is sponsored by PNM Witness Gutierrez** | | | | | |
| 7 | | | | | | |
| 8 | **Description** | **Base Period Jul-25 - Jun-26** | **Linkage 1 Jul-26 - Jun-27** | **Linkage 2 Oct-26 - Sep-27** | **Test Period Oct-27 - Sep-28** | **Reference** |
| 9 | | | | | | |
| 10 | | | | | | |
| 11 | Production | $ 209.5 | $ 322.2 | $ 286.7 | $ 80.7 | |
| 12 | Production AFUDC, incl. capital interest | 9.3 | 14.1 | 17.0 | 4.8 | |
| 13 | Total Production | 218.8 | 336.4 | 303.7 | 85.5 | |
| 14 | | | | | | |
| 15 | PNM Transmission | 73.8 | 268.3 | 339.8 | 411.4 | |
| 16 | PNM Transmission AFUDC, incl. capital interest | 5.1 | 9.0 | 11.7 | 26.7 | |
| 17 | Total PNM Transmission | 78.9 | 277.2 | 351.5 | 438.1 | |
| 18 | | | | | | |
| 19 | PNM Distribution | 301.5 | 352.4 | 350.2 | 417.4 | |
| 20 | PNM Distribution AFUDC, incl. capital interest | 9.5 | 9.7 | 9.3 | 11.2 | |
| 21 | Total PNM Distribution | 310.9 | 362.1 | 359.5 | 428.7 | |
| 22 | | | | | | |
| 23 | Nuclear Fuel | (5.0) | 3.0 | 1.8 | 3.3 | |
| 24 | Nuclear Fuel AFUDC | (0.4) | 2.7 | 2.8 | 3.2 | |
| 25 | Total Nuclear Fuel | (5.5) | 5.7 | 4.6 | 6.5 | |
| 26 | | | | | | |
| 27 | Corporate | 83.4 | 68.5 | 70.1 | 57.8 | |
| 28 | Corporate AFUDC, incl. capital interest | 1.4 | 2.5 | 2.7 | 1.1 | |
| 29 | Total Corporate | 84.8 | 71.0 | 72.9 | 58.8 | |
| 30 | | | | | | |
| 31 | Total Construction | 663.2 | 1,014.3 | 1,048.6 | 970.6 | |
| 32 | Total AFUDC, incl. capital interest | 24.8 | 38.0 | 43.6 | 47.0 | |
| 33 | Total Electric Utility | $ 688.0 | $ 1,052.3 | $ 1,092.2 | $ 1,017.6 | |
| 34 | | | | | | |
| 35 | | Notes: | | | | |
| 36 | | Base period data is historical information from the Company's Book Balance Amounts | | | | |

# PNM Schedule J-2

Sources of construction funds

| | A | B | C | D | E | F |
|---|---|---|---|---|---|---|
| 1 | **Public Service Company of New Mexico** | | | | | |
| 2 | **Schedule J-2** | | | | | |
| 3 | **Sources of Construction Funds** | | | | | |
| 4 | **Base Period Ending 6/30/2026** | | | | | |
| 5 | **Test Period Ending 9/30/2028** | | | | | |
| 6 | **This schedule is sponsored by PNM Witness Gutierrez** | | | | | |
| 7 | | | | | | |
| 8 | **Description** | **Base Period Jul-25 - Jun-26** | **Linkage 1 Jul-26 - Jun-27** | **Linkage 2 Oct-26 - Sep-27** | **Test Period Oct-27 - Sep-28** | **Reference** |
| 9 | | **($ in millions)** | | | | |
| 10 | | | | | | |
| 11 | Short Term Debt (internal cash) | $ 247.4 | $ 168.2 | $ 152.1 | $ 75.9 | |
| 12 | | | | | | |
| 13 | Long Term Debt | 146.3 | 292.5 | 308.7 | 309.2 | |
| 14 | | | | | | |
| 15 | Equity | 269.6 | 553.7 | 587.7 | 585.5 | |
| 16 | | | | | | |
| 17 | Projected Funds Available | $ 663.2 | $ 1,014.3 | $ 1,048.6 | $ 970.6 | |
| 18 | | | | | | |
| 19 | | | | | | |
| 20 | | Notes: | | | | |
| 21 | | Please refer to Rule 530 G-series schedules for anticipated cost rates. | | | | |
| 22 | | Base period data is historical information from the Company's Book Balance Amounts | | | | |

Fully allocated cost of service study

# PNM K Series Schedules

Schedule K-1: Allocation of Rate Base--jurisdictional

Schedule K-2: Allocation of Rate Base--functional classification

Schedule K-3: Allocation of Rate Base--demand, energy, and customer

Schedule K-4: Allocation of Rate Base to rate classes

Schedule K-5: Allocation of total expenses--jurisdictional

Schedule K-6: Allocation of total expenses--functional classification

Schedule K-7: Allocation of total expenses--demand, energy, and customer

Schedule K-8: Allocation of total expenses to rate classes

# PNM Schedule K-1

Allocation of Rate Base--jurisdictional

| | A | B | C | D |
|---|---|---|---|---|
| 1 | **Public Service Company of New Mexico** | | | |
| 2 | **Schedule K-1** | | | |
| 3 | **Allocation of Rate Base - Jurisdictional** | | | |
| 4 | **Base Period Ending 6/30/2026** | | | |
| 5 | **Test Period Ending 9/30/2028** | | | |
| 6 | **This Schedule is sponsored by** | | | |
| 7 | **PNM Witness Gutierrez** | | | |
| 8 | | | | |
| 9 | **Description** | **Total Company Adjusted Base Period** | **Base Rate Adjusted Base Period** | Reference |
| 10 | | | | |
| 11 | Total Net Plant | 4,981,866,834 | 3,768,049,520 | PNM Exhibit RNG-3 COS Base, Line 81 |
| 12 | | | | |
| 13 | Total Accumulated Deferred Income Taxes | (839,442,741) | (665,079,918) | PNM Exhibit RNG-3 COS Base, Line 145 |
| 14 | | | | |
| 15 | Total Regulatory Assets & Liabilities | (72,678,175) | (18,801,236) | PNM Exhibit RNG-3 COS Base, Line 191 |
| 16 | | | | |
| 17 | Total Other Rate Base Items | 137,262,881 | 137,492,930 | PNM Exhibit RNG-3 COS Base, Line 222 |
| 18 | | | | |
| 19 | Total Working Capital | 242,286,195 | 222,178,573 | PNM Exhibit RNG-3 COS Base, Line 247 |
| 20 | | | | |
| 21 | **Total Rate Base** | 4,449,294,994 | 3,443,839,870 | |

| | A | E | F | G |
|---|---|---|---|---|
| 1 | **Public Service Company of New Mexico** | | | |
| 2 | **Schedule K-1** | | | |
| 3 | **Allocation of Rate Base - Jurisdictional** | | | |
| 4 | **Base Period Ending 6/30/2026** | | | |
| 5 | **Test Period Ending 9/30/2028** | | | |
| 6 | **This Schedule is sponsored by** | | | |
| 7 | **PNM Witness Gutierrez** | | | |
| 8 | | | | |
| 9 | **Description** | **Total Company Test Period** | **Base Rate Test Period** | Reference |
| 10 | | | | |
| 11 | Total Net Plant | 5,893,837,858 | 4,600,072,468 | PNM Exhibit RNG-3 COS Test, Line 81 |
| 12 | | | | |
| 13 | Total Accumulated Deferred Income Taxes | (840,626,333) | (665,877,613) | PNM Exhibit RNG-3 COS Test, Line 145 |
| 14 | | | | |
| 15 | Total Regulatory Assets & Liabilities | (88,939,504) | (44,219,576) | PNM Exhibit RNG-3 COS Test, Line 191 |
| 16 | | | | |
| 17 | Total Other Rate Base Items | 131,180,054 | 123,498,206 | PNM Exhibit RNG-3 COS Test, Line 222 |
| 18 | | | | |
| 19 | Total Working Capital | 222,358,759 | 201,785,815 | PNM Exhibit RNG-3 COS Test, Line 247 |
| 20 | | | | |
| 21 | **Total Rate Base** | 5,317,810,834 | 4,215,259,299 | |

| | A | H | I | J | K |
|---|---|---|---|---|---|
| 1 | **Public Service Company of New Mexico** | | | | |
| 2 | **Schedule K-1** | | | | |
| 3 | **Allocation of Rate Base - Jurisdictional** | | | | |
| 4 | **Base Period Ending 6/30/2026** | | | | |
| 5 | **Test Period Ending 9/30/2028** | | | | |
| 6 | **This Schedule is sponsored by** | | | | |
| 7 | **PNM Witness Gutierrez** | | | | |
| 8 | | Per NMAC 17.1.3.16.C(1) | | | |
| 9 | **Description** | **Total Company Linkage 1 Jul-26 - Jun-27** | **Base Rate Linkage 1 Jul-26 - Jun-27** | **Total Company Linkage 2 Oct-26 - Sep-27** | **Base Rate Linkage 2 Oct-26 - Sep-27** |
| 10 | | | | | |
| 11 | Total Net Plant | 5,417,042,687 | 4,151,089,570 | 5,698,668,166 | 4,426,197,573 |
| 12 | | | | | |
| 13 | Total Accumulated Deferred Income Taxes | (837,529,634) | (662,936,809) | (839,058,663) | (666,499,684) |
| 14 | | | | | |
| 15 | Total Regulatory Assets & Liabilities | (64,825,991) | (13,701,517) | (61,262,306) | (12,086,168) |
| 16 | | | | | |
| 17 | Total Other Rate Base Items | 129,973,269 | 127,181,354 | 130,969,027 | 126,865,938 |
| 18 | | | | | |
| 19 | Total Working Capital | 240,150,205 | 219,710,358 | 237,433,002 | 216,923,865 |
| 20 | | | | | |
| 21 | **Total Rate Base** | 4,884,810,536 | 3,821,342,955 | 5,166,749,225 | 4,091,401,525 |

| | A |
|---|---|
| 1 | **Public Service Company of New Mexico** |
| 2 | **Schedule K-1** |
| 3 | **Allocation of Rate Base - Jurisdictional (Notes)** |
| 4 | **Base Period Ending 6/30/2026** |
| 5 | **Test Period Ending 9/30/2028** |
| 6 | **This Schedule is sponsored by PNM Witness Gutierrez** |
| 7 | |
| 8 | Linkage Data is provided for NMPRC Retail Jurisdiction, at a summary level, pursuant to FTY NMAC 17.1.3.16.C(1) based |
| 9 | on test period allocators. |
| 10 | Please refer to PNM Exhibit RNG-3 for base period, adjustments to base period, and test period information. |
| 11 | Please refer to PNM Exhibit RNG-4 and the testimony of PNM witness Gutierrez for further discussion of base period |
| 12 | adjustments and adjustments from base period to test period, including the development of linkage data. |
| 13 | Linkage 1 data reflects the 12 months ending June 30, 2027. Linkage 2 data reflects the 12 months ending |
| 14 | September 30, 2027. |
| 15 | Base period data is historical information from the Company's Book Balance Amounts |

# PNM Schedule K-2

Allocation of Rate Base--functional classification

**Public Service Company of New Mexico**
**K-2 Allocation of Rate Base - Functional Classification**
Base Period Ending June 30, 2026
Test Period Ending September 30, 2028

**Base Period**

| Description | Total | Production | Storage Production | Storage Transmission | Storage Distribution | Transmission | Distribution | Customer |
|---|---|---|---|---|---|---|---|---|
| Total Net Plant In Service | 3,768,049,520 | 1,077,520,148 | 78,121,173 | 64,353,324 | 7,310,455 | 656,427,768 | 1,578,791,967 | 305,524,685 |
| Total Accumulated Deferred Income Taxes | (665,079,918) | (302,661,610) | (1,774,620) | (1,220,620) | (251,980) | (96,919,807) | (207,468,667) | (54,782,614) |
| Total Regulatory Assets & Liabilities | (18,801,236) | 95,433,654 | (6,934,221) | (6,647,307) | (315,862) | (27,776,889) | (65,339,630) | (7,220,981) |
| Total Other Rate Base Items | 137,492,930 | (5,507,408) | (1,288,032) | (1,416,275) | 5,978 | 47,291,354 | 46,444,100 | 51,963,212 |
| Total Working Capital | 222,178,573 | 116,337,820 | 61,068 | 50,305 | 5,715 | 12,570,607 | 81,483,229 | 11,669,830 |
| Total Rate Base | 3,443,839,870 | 981,122,604 | 68,185,368 | 55,119,428 | 6,754,306 | 591,593,032 | 1,433,911,000 | 307,154,132 |

**Test Period**

| Description | Total | Production | Storage Production | Storage Transmission | Storage Distribution | Transmission | Distribution | Customer |
|---|---|---|---|---|---|---|---|---|
| Total Net Plant In Service | 4,600,072,468 | 1,240,578,811 | 194,363,523 | 64,401,840 | 50,610,256 | 703,357,079 | 1,943,204,387 | 403,556,573 |
| Total Accumulated Deferred Income Taxes | (665,877,613) | (258,913,849) | (9,957,422) | (6,020,495) | (1,654,557) | (93,125,669) | (238,841,183) | (57,364,438) |
| Total Regulatory Assets & Liabilities | (44,219,576) | 39,392,906 | 8,573,131 | 13,664,291 | (1,499,656) | (20,667,442) | (71,069,999) | (12,612,807) |
| Total Other Rate Base Items | 123,498,206 | (11,668,431) | (927,381) | (1,213,021) | 70,820 | 44,864,275 | 46,398,062 | 45,973,882 |
| Total Working Capital | 201,785,815 | 95,172,278 | 161,555 | 53,531 | 42,067 | 12,725,675 | 80,512,398 | 13,118,310 |
| Total Rate Base | 4,215,259,299 | 1,104,561,715 | 192,213,406 | 70,886,145 | 47,568,931 | 647,153,919 | 1,760,203,664 | 392,671,519 |

This schedule is sponsored by PNM Witness Larkin

# PNM Schedule K-3

Allocation of Rate Base--demand, energy, and customer

**Public Service Company of New Mexico**
**K-3 Allocation of Rate Base - Demand, Energy, and Customer**
Base Period Ending June 30, 2026
Test Period Ending September 30, 2028

**Base Period**

| Description | Total | Demand | Energy | Customer |
|---|---|---|---|---|
| Total Net Plant In Service | 3,768,049,520 | 3,462,524,835 | - | 305,524,685 |
| Total Accumulated Deferred Income Taxes | (665,079,918) | (618,529,625) | 8,232,321 | (54,782,614) |
| Total Regulatory Assets & Liabilities | (18,801,236) | (11,681,814) | 101,559 | (7,220,981) |
| Total Other Rate Base Items | 137,492,930 | 85,453,653 | 76,065 | 51,963,212 |
| Total Working Capital | 222,178,573 | 132,980,930 | 77,527,814 | 11,669,830 |
| Total Rate Base | 3,443,839,870 | 3,050,747,980 | 85,937,758 | 307,154,132 |

**Test Period**

| Description | Total | Demand | Energy | Customer |
|---|---|---|---|---|
| Total Net Plant In Service | 4,600,072,468 | 4,196,515,895 | - | 403,556,573 |
| Total Accumulated Deferred Income Taxes | (665,877,613) | (618,141,594) | 9,628,419 | (57,364,438) |
| Total Regulatory Assets & Liabilities | (44,219,576) | (31,633,220) | 26,452 | (12,612,807) |
| Total Other Rate Base Items | 123,498,206 | 77,425,087 | 99,237 | 45,973,882 |
| Total Working Capital | 201,785,815 | 131,765,393 | 56,902,112 | 13,118,310 |
| Total Rate Base | 4,215,259,299 | 3,755,931,561 | 66,656,219 | 392,671,519 |

This schedule is sponsored by PNM Witness Larkin

# PNM Schedule K-4

Allocation of Rate Base to rate classes

**Public Service Company of New Mexico**
**K-4 Allocation of Rate Base to Rate Classes**
Base Period Ending June 30, 2026
Test Period Ending September 30, 2028

**Base Period**

| | | Schedule 1 | Schedule 2 | Schedule 3B | Schedule 3C |
|---|---|---|---|---|---|
| **Description** | **Total** | **Residential** | **Small Power** | **General Power** | **General Power** |
| Total Net Plant In Service | 3,768,049,520 | 2,000,657,357 | 447,280,247 | 557,387,781 | 142,150,902 |
| Total Accumulated Deferred Income Taxes | (665,079,918) | (354,313,600) | (78,182,423) | (99,247,922) | (24,192,209) |
| Total Regulatory Assets & Liabilities | (18,801,236) | (11,563,644) | (2,887,107) | (1,119,829) | (1,227,548) |
| Total Other Rate Base Items | 137,492,930 | 83,500,465 | 16,720,722 | 14,054,264 | 3,972,180 |
| Total Working Capital | 222,178,573 | 108,939,419 | 26,612,648 | 34,462,073 | 8,748,215 |
| Total Rate Base | 3,443,839,870 | 1,827,219,996 | 409,544,086 | 505,536,367 | 129,451,541 |

**Test Period**

| | | Schedule 1 | Schedule 2 | Schedule 3B | Schedule 3C |
|---|---|---|---|---|---|
| **Description** | **Total** | **Residential** | **Small Power** | **General Power** | **General Power** |
| Total Net Plant In Service | 4,600,072,468 | 2,398,259,058 | 527,500,085 | 638,668,493 | 172,904,994 |
| Total Accumulated Deferred Income Taxes | (665,877,613) | (348,276,850) | (75,887,099) | (93,414,583) | (24,616,973) |
| Total Regulatory Assets & Liabilities | (44,219,576) | (28,523,548) | (6,346,120) | (4,793,435) | (2,079,936) |
| Total Other Rate Base Items | 123,498,206 | 72,672,749 | 14,342,723 | 11,369,181 | 3,287,582 |
| Total Working Capital | 201,785,815 | 97,314,441 | 22,733,452 | 28,472,252 | 7,796,664 |
| Total Rate Base | 4,215,259,299 | 2,191,445,850 | 482,343,040 | 580,301,908 | 157,292,330 |

This schedule is sponsored by PNM Witness Larkin

| Schedule 3D | Schedule 3E | Schedule 3F | Schedule 4 | Schedule 5[1] | Schedule 10 | Schedule 11 | Schedule 15 |
|---|---|---|---|---|---|---|---|
| General Power | General Power | General Power | Large Power | Industrial Power | Irrigation | Water & Sewage | Universities |
| 37,693,442 | 12,189,625 | 4,183,141 | 234,597,168 | 3,122,850 | 10,055,219 | 46,310,087 | 11,040,705 |
| (6,711,705) | (2,055,416) | (657,875) | (43,644,913) | (683,879) | (1,712,928) | (7,393,003) | (2,394,625) |
| (71,835) | (121,211) | (80,077) | 1,242,334 | 99,707 | (95,649) | (769,663) | 352,965 |
| 985,078 | 329,689 | 114,703 | 5,831,964 | 64,283 | 354,880 | 1,510,986 | 235,898 |
| 2,377,772 | 724,305 | 249,321 | 16,229,693 | 195,184 | 624,119 | 3,525,592 | 930,829 |
| 34,272,753 | 11,066,991 | 3,809,213 | 214,256,246 | 2,798,146 | 9,225,641 | 43,183,999 | 10,165,772 |

| Schedule 3D | Schedule 3E | Schedule 3F | Schedule 4 | Schedule 10 | Schedule 11 | Schedule 15 | Schedule 30 |
|---|---|---|---|---|---|---|---|
| General Power | General Power | General Power | Large Power | Irrigation | Water & Sewage | Universities | Manufacturing |
| 45,259,861 | 11,200,082 | 6,059,518 | 313,929,972 | 11,989,525 | 48,169,144 | 11,268,034 | 134,717,655 |
| (6,593,373) | (1,592,030) | (823,708) | (47,250,548) | (1,710,980) | (6,466,408) | (1,905,506) | (21,887,457) |
| (355,883) | (135,579) | (115,284) | (551,773) | (149,879) | (884,668) | 234,029 | 1,733,224 |
| 812,071 | 215,147 | 121,097 | 5,239,832 | 284,456 | 1,103,823 | 139,381 | 1,832,126 |
| 2,063,370 | 502,011 | 270,791 | 15,126,408 | 538,690 | 2,606,772 | 681,130 | 7,619,276 |
| 41,186,045 | 10,189,630 | 5,512,414 | 286,493,891 | 10,951,813 | 44,528,663 | 10,417,068 | 124,014,823 |

This schedule is sponsored by PNM Witness Larkin

| Schedule 30 | Schedule 33B | Schedule 35B | Schedule 36B | Schedule 6 |
|---|---|---|---|---|
| Manufacturing | Station Service | Large Power Service >3,000kW | Special Service Rate Renew Energy Res | Private Area Lighting |
| 104,095,678 | 1,278,167 | 28,942,121 | 90,385,294 | 4,858,526 |
| (21,418,907) | (278,670) | (5,962,915) | (11,934,112) | (689,695) |
| 2,393,393 | 37,962 | 660,684 | (4,298,612) | (149,929) |
| 2,316,595 | 29,198 | 632,112 | 5,889,973 | 207,189 |
| 8,930,411 | 63,900 | 2,321,869 | 5,570,782 | 307,999 |
| 96,317,169 | 1,130,556 | 26,593,871 | 85,613,325 | 4,534,089 |

| Schedule 33B | Schedule 35B | Schedule 36B | Schedule 6 | Schedule 20 |
|---|---|---|---|---|
| Station Service | Large Power Service >3,000kW | Special Service Rate Renew Energy Res | Private Area Lighting | PNM-Owned Street Lighting |
| 1,618,627 | 57,414,694 | 175,454,307 | 5,351,550 | 32,798,488 |
| (263,818) | (9,298,892) | (21,350,551) | (685,039) | (2,898,223) |
| 25,741 | 699,240 | (1,605,802) | (137,810) | (1,035,202) |
| 34,232 | 785,644 | 10,365,567 | 190,505 | 522,107 |
| 115,252 | 3,224,823 | 11,248,658 | 250,620 | 848,116 |
| 1,530,034 | 52,825,509 | 174,112,179 | 4,969,825 | 30,235,286 |

This schedule is sponsored by PNM Witness Larkin

# PNM Schedule K-5

Allocation of total expenses--jurisdictional

| | A | B | C | D |
|---|---|---|---|---|
| 1 | **Public Service Company of New Mexico** | | | |
| 2 | **Schedule K-5** | | | |
| 3 | **Allocation of Total Expenses - Jurisdictional** | | | |
| 4 | **Base Period Ending 6/30/2026** | | | |
| 5 | **Test Period Ending 9/30/2028** | | | |
| 6 | **This schedule is sponsored by PNM Witness Gutierrez** | | | |
| 7 | | | | |
| 8 | **Description** | **Total Company Adjusted Base Period** | **Base Rate Adjusted Base Period** | **Reference** |
| 9 | **Fuel Related Expenses** | | | |
| 10 | Total Fuel (Net OSS) | 185,002,575 | 148,907,711 | PNM Exhibit RNG-3 COS BASE, Line 276 |
| 11 | Total Non-Fuel Items | 118,959,206 | 115,652,520 | PNM Exhibit RNG-3 COS BASE, Line 289 |
| 12 | Total Fuel Related Expense | 303,961,781 | 264,560,231 | |
| 13 | | | | |
| 14 | **Operating and Maintenance Expenses (O&M)** | | | |
| 15 | Total Production O&M | 96,990,246 | 94,171,146 | PNM Exhibit RNG-3 COS BASE, Line 337 |
| 16 | Total Energy Storage O&M | 80,171 | 80,171 | PNM Exhibit RNG-3 COS BASE, Line 344 |
| 17 | Total Transmission O&M | 65,605,256 | 48,936,513 | PNM Exhibit RNG-3 COS BASE, Line 367 |
| 18 | Total Distribution O&M | 39,874,619 | 39,874,619 | PNM Exhibit RNG-3 COS BASE, Line 400 |
| 19 | Total Customer Related O&M | 32,823,024 | 32,823,024 | PNM Exhibit RNG-3 COS BASE, Line 418 |
| 20 | Total Administrative & General Expense | 102,658,842 | 93,466,050 | PNM Exhibit RNG-3 COS BASE, Line 442 |
| 21 | Total Operating and Maintenance Expenses | 338,032,157 | 309,351,522 | |
| 22 | | | | |
| 23 | Total Depreciation and Amortization Expense | 272,117,576 | 221,342,810 | PNM Exhibit RNG-3 COS BASE, Line 494 |
| 24 | Total General Taxes | 57,947,300 | 44,822,703 | PNM Exhibit RNG-3 COS BASE, Line 567 |
| 25 | Total Other Allowable Expenses | 23,620,062 | 21,702,590 | PNM Exhibit RNG-3 COS BASE, Line 606 |
| 26 | | | | |
| 27 | Total Expenses | 995,678,876 | 861,779,857 | |
| 28 | | | | |
| 29 | Return On Rate Base | 312,507,951 | 241,790,420 | PNM Exhibit RNG-3 COS BASE, Line 616 |
| 30 | Federal Income Tax | 25,346,644 | 18,041,491 | PNM Exhibit RNG-3 COS BASE, Line 670 |
| 31 | State Income Tax | 14,227,423 | 10,798,856 | PNM Exhibit RNG-3 COS BASE, Line 688 |
| 32 | Revenue Credits | (33,536,347) | (27,753,428) | PNM Exhibit RNG-3 COS BASE, Line 718 |
| 33 | Revenue Tax | 7,753,925 | 6,517,477 | PNM Exhibit RNG-3 COS BASE, Line 723 |
| 34 | | | | |
| 35 | Total Revenue Requirement | 1,321,978,471 | 1,111,174,673 | PNM Exhibit RNG-3 COS BASE, Line 727 |

| | A | E | F | G |
|---|---|---|---|---|
| 1 | **Public Service Company of New Mexico** | | | |
| 2 | **Schedule K-5** | | | |
| 3 | **Allocation of Total Expenses - Jurisdictional** | | | |
| 4 | **Base Period Ending 6/30/2026** | | | |
| 5 | **Test Period Ending 9/30/2028** | | | |
| 6 | **This schedule is sponsored by PNM Witness Gutierrez** | | | |
| 7 | | | | |
| 8 | **Description** | **Total Company Test Period** | **Base Rate Test Period** | **Reference** |
| 9 | **Fuel Related Expenses** | | | |
| 10 | Total Fuel (Net OSS) | 167,693,874 | 134,138,322 | PNM Exhibit RNG-3 COS Test, Line 276 |
| 11 | Total Non-Fuel Items | 173,414,307 | 170,867,144 | PNM Exhibit RNG-3 COS Test, Line 289 |
| 12 | Total Fuel Related Expense | 341,108,181 | 305,005,466 | |
| 13 | | | | |
| 14 | **Operating and Maintenance Expenses (O&M)** | | | |
| 15 | Total Production O&M | 103,645,590 | 100,806,811 | PNM Exhibit RNG-3 COS Test, Line 336 |
| 16 | Total Energy Storage O&M | 1,803,213 | 1,803,213 | PNM Exhibit RNG-3 COS Test, Line 342 |
| 17 | Total Transmission O&M | 73,989,667 | 53,401,457 | PNM Exhibit RNG-3 COS Test, Line 365 |
| 18 | Total Distribution O&M | 71,956,180 | 71,956,180 | PNM Exhibit RNG-3 COS Test, Line 398 |
| 19 | Total Customer Related O&M | 38,220,220 | 38,220,220 | PNM Exhibit RNG-3 COS Test, Line 416 |
| 20 | Total Administrative & General Expense | 118,245,449 | 107,930,133 | PNM Exhibit RNG-3 COS Test, Line 440 |
| 21 | Total Operating and Maintenance Expenses | 407,860,319 | 374,118,014 | |
| 22 | | | | |
| 23 | Total Depreciation and Amortization Expense | 319,091,540 | 264,866,450 | PNM Exhibit RNG-3 COS Test, Line 492 |
| 24 | Total General Taxes | 68,096,507 | 53,025,427 | PNM Exhibit RNG-3 COS Test, Line 565 |
| 25 | Total Other Allowable Expenses | 32,708,776 | 30,957,182 | PNM Exhibit RNG-3 COS Test, Line 604 |
| 26 | | | | |
| 27 | Total Expenses | 1,168,865,323 | 1,027,972,538 | |
| 28 | | | | |
| 29 | Return On Rate Base | 399,669,852 | 316,615,179 | PNM Exhibit RNG-3 COS Test, Line 614 |
| 30 | Federal Income Tax | 32,813,444 | 20,700,426 | PNM Exhibit RNG-3 COS Test, Line 668 |
| 31 | State Income Tax | 16,629,242 | 12,547,376 | PNM Exhibit RNG-3 COS Test, Line 686 |
| 32 | Revenue Credits | (29,448,053) | (23,251,100) | PNM Exhibit RNG-3 COS Test, Line 716 |
| 33 | Revenue Tax | 9,372,326 | 7,992,048 | PNM Exhibit RNG-3 COS Test, Line 721 |
| 34 | | | | |
| 35 | Total Revenue Requirement | 1,597,902,135 | 1,362,576,466 | PNM Exhibit RNG-3 COS Test, Line 725 |

| | A | H | I | J | K |
|---|---|---|---|---|---|
| 1 | **Public Service Company of New Mexico** | | | | |
| 2 | **Schedule K-5** | | | | |
| 3 | **Allocation of Total Expenses - Jurisdictional** | | | | |
| 4 | **Base Period Ending 6/30/2026** | | | | |
| 5 | **Test Period Ending 9/30/2028** | | | | |
| 6 | **This schedule is sponsored by PNM Witness Gutierrez** | | | | |
| 7 | | Per NMAC 17.1.3.16.B | | | |
| 8 | **Description** | **Total Company Linkage 1 Jul-26 - Jun-27** | **Base Rate Linkage 1 Jul-26 - Jun-27** | **Total Company Linkage 2 Oct-26 - Sep-27** | **Base Rate Linkage 2 Oct-26 - Sep-27** |
| 9 | **Fuel Related Expenses** | | | | |
| 10 | Total Fuel (Net OSS) | 169,405,072 | 136,280,534 | 165,059,568 | 131,900,166 |
| 11 | Total Non-Fuel Items | 111,189,424 | 108,634,526 | 115,995,824 | 113,444,793 |
| 12 | Total Fuel Related Expense | 280,594,496 | 244,915,060 | 281,055,392 | 245,344,959 |
| 13 | | | | | |
| 14 | **Operating and Maintenance Expenses (O&M)** | | | | |
| 15 | Total Production O&M | 99,539,374 | 96,788,993 | 99,677,800 | 96,924,548 |
| 16 | Total Energy Storage O&M | 82,338 | 82,338 | 82,457 | 82,457 |
| 17 | Total Transmission O&M | 68,116,449 | 50,172,583 | 68,501,960 | 50,338,026 |
| 18 | Total Distribution O&M | 40,605,181 | 40,605,181 | 40,856,810 | 40,856,810 |
| 19 | Total Customer Related O&M | 33,460,406 | 33,460,406 | 33,634,061 | 33,634,061 |
| 20 | Total Administrative & General Expense | 100,976,705 | 91,785,586 | 102,914,896 | 93,573,586 |
| 21 | Total Operating and Maintenance Expenses | 342,780,452 | 312,895,088 | 345,667,985 | 315,409,488 |
| 22 | | | | | |
| 23 | Total Depreciation and Amortization Expense | 265,201,416 | 213,970,153 | 271,028,590 | 219,273,856 |
| 24 | Total General Taxes | 59,499,261 | 46,265,191 | 63,841,436 | 49,756,010 |
| 25 | Total Other Allowable Expenses | 21,231,709 | 19,579,926 | 21,181,957 | 19,603,576 |
| 26 | | | | | |
| 27 | Total Expenses | 969,307,334 | 837,625,417 | 982,775,359 | 849,387,890 |
| 28 | | | | | |
| 29 | Return On Rate Base | 352,636,318 | 275,664,277 | 373,042,578 | 295,210,674 |
| 30 | Federal Income Tax | 27,630,443 | 19,833,045 | 30,253,686 | 22,216,938 |
| 31 | State Income Tax | 14,828,618 | 11,265,223 | 15,560,886 | 11,949,681 |
| 32 | Revenue Credits | (34,211,664) | (28,208,034) | (34,211,664) | (28,208,595) |
| 33 | Revenue Tax | 7,848,127 | 6,585,462 | 8,067,783 | 6,788,284 |
| 34 | | | | | |
| 35 | Total Revenue Requirement | 1,338,039,176 | 1,122,765,390 | 1,375,488,628 | 1,157,344,872 |

| | A |
|---|---|
| 1 | **Public Service Company of New Mexico** |
| 2 | **Schedule K-5** |
| 3 | **Allocation of Total Expenses - Jurisdictional (Notes)** |
| 4 | **Base Period Ending 6/30/2026** |
| 5 | **Test Period Ending 9/30/2028** |
| 6 | **This schedule is sponsored by PNM Witness Gutierrez** |
| 7 | |
| 8 | Linkage Data is provided for NMPRC Retail Jurisdiction, at a summary level, pursuant to FTY NMAC 17.1.3.16.B based on |
| 9 | test period allocators. |
| 10 | Please refer to PNM Exhibit RNG-3 for base period, adjustments to base period, and test period information. |
| 11 | Please refer to PNM Exhibit RNG-4 and the testimony of PNM witness Gutierrez for further discussion of base period |
| 12 | adjustments and adjustments from base period to test period, including the development of linkage data. |
| 13 | Linkage 1 data reflects the 12 months ending June 30, 2027. Linkage 2 data reflects the 12 months ending |
| 14 | September 30, 2027. |
| 15 | Base period data is historical information from the Company's Book Balance Amounts |

# PNM Schedule K-6

Allocation of total expenses--functional classification

**Public Service Company of New Mexico**
**K-6 Allocation of Total Expenses - Functional Classification**
Base Period Ending June 30, 2026
Test Period Ending September 30, 2028

**Base Period**

| Description | Total | Production | Storage Production | Storage Transmission | Storage Distribution | Transmission | Distribution | Customer |
|---|---|---|---|---|---|---|---|---|
| Total Operations and Maintenance | 309,351,522 | 112,517,172 | 108,074 | 27,380 | 30,997 | 56,397,581 | 59,238,032 | 81,032,287 |
| Total Production Fuel-Related Expenses (Net OSS) | 148,907,711 | 148,907,711 | - | - | - | - | - | - |
| Total Production - Non-Fuel Items | 115,652,520 | 33,510,292 | 39,367,834 | 42,774,395 | - | - | - | - |
| Total Depreciation & Amortization Expense | 221,342,810 | 63,370,976 | 3,099,839 | 2,503,091 | 307,165 | 30,117,250 | 88,847,445 | 33,097,045 |
| Total General Taxes | 44,822,703 | 16,987,638 | 178,561 | - | 66,539 | 7,190,149 | 16,375,031 | 4,024,785 |
| Total Other Allowable Expenses | 21,702,590 | 19,559,280 | 19,827 | 16,333 | 1,855 | 166,602 | 492,937 | 1,445,755 |
| Total Expenses | 861,779,857 | 394,853,068 | 42,774,135 | 45,321,199 | 406,557 | 93,871,581 | 164,953,446 | 119,599,872 |

*Total Operations and Maintenance does not Include Total Production-Fuel Related Items*

**Test Period**

| Description | Total | Production | Storage Production | Storage Transmission | Storage Distribution | Transmission | Distribution | Customer |
|---|---|---|---|---|---|---|---|---|
| Total Operations and Maintenance | 374,118,014 | 121,796,233 | 1,065,075 | 724,850 | 151,336 | 61,405,269 | 83,774,100 | 105,201,151 |
| Total Production Fuel-Related Expenses (Net OSS) | 134,138,322 | 134,138,322 | - | - | - | - | - | - |
| Total Production - Non-Fuel Items | 170,867,144 | 33,722,510 | 65,728,520 | 71,416,114 | - | - | - | - |
| Total Depreciation & Amortization Expense | 264,866,450 | 68,277,716 | 10,756,170 | 3,951,958 | 2,669,380 | 31,162,379 | 111,205,977 | 36,842,869 |
| Total General Taxes | 53,025,427 | 15,927,447 | 1,747,100 | 578,679 | 455,001 | 7,632,592 | 21,420,519 | 5,264,089 |
| Total Other Allowable Expenses | 30,957,182 | 23,267,883 | 79,133 | 27,633 | 20,118 | 620,418 | 841,263 | 6,100,734 |
| Total Expenses | 1,027,972,538 | 397,130,110 | 79,375,999 | 76,699,234 | 3,295,835 | 100,820,657 | 217,241,860 | 153,408,842 |

*Total Operations and Maintenance does not Include Total Production-Fuel Related Items*

# PNM Schedule K-7

Allocation of total expenses--demand, energy, and customer

**Public Service Company of New Mexico**
**K-7 Allocation of Total Expenses - Demand, Energy, and Customer**
Base Period Ending June 30, 2026
Test Period Ending September 30, 2028

**Base Period**

| Description | Total | Demand | Energy | Customer |
|---|---|---|---|---|
| Total Operations and Maintenance | 309,351,522 | 228,319,236 | - | 81,032,287 |
| Total Production Fuel-Related Expenses (Net OSS) | 148,907,711 | - | 148,907,711 | - |
| Total Production - Non-Fuel Items | 115,652,520 | 82,142,228 | 33,510,292 | - |
| Total Depreciation & Amortization Expense | 221,342,810 | 188,245,765 | - | 33,097,045 |
| Total General Taxes | 44,822,703 | 40,797,918 | - | 4,024,785 |
| Total Other Allowable Expenses | 21,702,590 | 20,256,835 | - | 1,445,755 |
| Total Expenses | 861,779,857 | 559,761,982 | 182,418,003 | 119,599,872 |

*Total Operations and Maintenance does not Include Total Production-Fuel Related Items*

**Test Period**

| Description | Total | Demand | Energy | Customer |
|---|---|---|---|---|
| Total Operations and Maintenance | 374,118,014 | 268,916,863 | - | 105,201,151 |
| Total Production Fuel-Related Expenses (Net OSS) | 134,138,322 | - | 134,138,322 | - |
| Total Production - Non-Fuel Items | 170,867,144 | 137,144,634 | 33,722,510 | - |
| Total Depreciation & Amortization Expense | 264,866,450 | 228,023,581 | - | 36,842,869 |
| Total General Taxes | 53,025,427 | 47,761,339 | - | 5,264,089 |
| Total Other Allowable Expenses | 30,957,182 | 24,843,365 | 13,084 | 6,100,734 |
| Total Expenses | 1,027,972,538 | 706,689,782 | 167,873,915 | 153,408,842 |

*Total Operations and Maintenance does not Include Total Production-Fuel Related Items*

This schedule is sponsored by PNM Witness Larkin

# PNM Schedule K-8

Allocation of total expenses to rate classes

**Public Service Company of New Mexico**
**K-8 Allocation of Total Expenses to Rate Classes**
Base Period Ending June 30, 2026
Test Period Ending September 30, 2028

**Base Period**

| | | Schedule 1 | Schedule 2 | Schedule 3B | Schedule 3C | Schedule 3D | Schedule 3E | Schedule 3F |
|---|---|---|---|---|---|---|---|---|
| **Description** | **Total** | **Residential** | **Small Power** | **General Power** | **General Power** | **General Power** | **General Power** | **General Power** |
| Total Operations and Maintenance | 309,351,522 | 179,736,938 | 35,404,612 | 38,566,659 | 9,334,568 | 2,587,140 | 761,682 | 229,142 |
| Total Production Fuel-Related Expenses (Net OSS) | 148,907,711 | 57,431,181 | 16,968,258 | 24,789,083 | 5,617,570 | 1,774,928 | 418,447 | 119,760 |
| Total Production - Non-Fuel Items | 115,652,520 | 51,242,006 | 12,546,165 | 18,405,521 | 3,917,845 | 1,274,640 | 310,473 | 77,515 |
| Total Depreciation & Amortization Expense | 221,342,810 | 122,360,468 | 26,371,894 | 30,707,448 | 7,923,543 | 2,074,404 | 676,791 | 232,889 |
| Total General Taxes | 44,822,703 | 23,772,089 | 5,407,307 | 6,663,518 | 1,676,292 | 450,378 | 142,392 | 47,240 |
| Total Other Allowable Expenses | 21,702,590 | 11,491,973 | 2,433,695 | 3,368,944 | 715,406 | 227,034 | 59,085 | 14,698 |
| Total Expenses | 861,779,857 | 446,034,655 | 99,131,931 | 122,501,173 | 29,185,225 | 8,388,524 | 2,368,870 | 721,244 |

*Total Operations and Maintenance does not Include Total Production-Fuel Related Items*

**Test Period**

| | | Schedule 1 | Schedule 2 | Schedule 3B | Schedule 3C | Schedule 3D | Schedule 3E | Schedule 3F |
|---|---|---|---|---|---|---|---|---|
| **Description** | **Total** | **Residential** | **Small Power** | **General Power** | **General Power** | **General Power** | **General Power** | **General Power** |
| Total Operations and Maintenance | 374,118,014 | 214,717,338 | 42,238,104 | 42,655,502 | 11,187,851 | 3,001,825 | 720,943 | 349,001 |
| Total Production Fuel-Related Expenses (Net OSS) | 134,138,322 | 45,007,695 | 12,687,755 | 18,945,954 | 4,762,652 | 1,445,167 | 304,153 | 132,232 |
| Total Production - Non-Fuel Items | 170,867,144 | 70,745,060 | 16,225,636 | 23,882,813 | 5,460,501 | 1,713,333 | 358,124 | 140,070 |
| Total Depreciation & Amortization Expense | 264,866,450 | 143,246,058 | 30,474,778 | 35,042,015 | 9,585,507 | 2,481,564 | 619,542 | 337,492 |
| Total General Taxes | 53,025,427 | 27,758,314 | 6,191,325 | 7,340,016 | 1,985,650 | 519,200 | 128,367 | 68,533 |
| Total Other Allowable Expenses | 30,957,182 | 15,246,021 | 3,187,421 | 4,046,552 | 957,268 | 282,390 | 61,151 | 24,523 |
| Total Expenses | 1,027,972,538 | 516,720,486 | 111,005,019 | 131,912,852 | 33,939,430 | 9,443,479 | 2,192,280 | 1,051,852 |

*Total Operations and Maintenance does not Include Total Production-Fuel Related Items*

This schedule is sponsored by PNM Witness Larkin

| Schedule 4 Large Power | Schedule 5[1] Industrial Power | Schedule 10 Irrigation | Schedule 11 Water & Sewage | Schedule 15 Universities | Schedule 30 Manufacturing | Schedule 33B Station Service | Schedule 35B Large Power Service >3,000kW | Schedule 36B Special Service Rate Renew Energy Res | Schedule 6 Private Area Lighting | Schedule 20 PNM-Owned Street Lighting |
|---|---|---|---|---|---|---|---|---|---|---|
| 17,215,325 | 287,947 | 723,484 | 2,903,874 | 1,027,335 | 8,925,276 | 118,712 | 2,460,278 | 7,231,803 | 446,509 | 1,390,240 |
| 14,789,453 | 207,525 | 408,807 | 3,015,549 | 1,195,921 | 10,992,747 | 54,407 | 2,721,935 | 7,653,800 | 202,291 | 546,051 |
| 9,721,798 | 180,646 | 270,571 | 1,411,749 | 741,804 | 6,380,823 | 66,886 | 1,675,597 | 7,069,363 | 97,670 | 261,447 |
| 13,078,141 | 167,424 | 583,730 | 2,694,923 | 594,465 | 5,869,524 | 68,927 | 1,642,808 | 4,133,904 | 442,802 | 1,718,724 |
| 2,852,893 | 41,037 | 123,459 | 539,436 | 145,137 | 1,327,355 | 16,884 | 369,222 | 902,962 | 51,459 | 293,643 |
| 1,656,270 | 34,135 | 48,850 | 178,847 | 120,599 | 1,001,769 | 13,566 | 277,606 | 22,965 | 8,577 | 28,573 |
| 59,313,881 | 918,715 | 2,158,901 | 10,744,377 | 3,825,261 | 34,497,494 | 339,381 | 9,147,446 | 27,014,796 | 1,249,308 | 4,238,677 |

| Schedule 4 Large Power | Schedule 10 Irrigation | Schedule 11 Water & Sewage | Schedule 15 Universities | Schedule 30 Manufacturing | Schedule 33B Station Service | Schedule 35B Large Power Service >3,000kW | Schedule 36B Special Service Rate Renew Energy Res | Schedule 6 Private Area Lighting | Schedule 20 PNM-Owned Street Lighting | Schedule 20[2] Customer - Owned Street Lighting |
|---|---|---|---|---|---|---|---|---|---|---|
| 21,998,623 | 873,198 | 2,966,265 | 979,068 | 10,757,214 | 157,729 | 4,556,690 | 14,770,479 | 515,115 | 1,285,131 | 387,939 |
| 13,261,220 | 326,356 | 2,217,872 | 973,110 | 9,674,636 | 179,345 | 4,038,997 | 19,623,681 | 151,595 | 173,461 | 232,442 |
| 14,569,890 | 366,099 | 1,507,474 | 913,528 | 9,317,450 | 137,169 | 3,899,518 | 21,176,404 | 123,382 | 165,297 | 165,396 |
| 17,450,061 | 678,484 | 2,789,684 | 594,933 | 7,526,678 | 87,959 | 3,225,853 | 8,128,441 | 483,698 | 1,696,917 | 416,786 |
| 3,620,537 | 141,771 | 550,894 | 133,479 | 1,575,891 | 19,942 | 671,449 | 1,876,634 | 59,121 | 301,034 | 83,269 |
| 2,339,353 | 69,409 | 204,383 | 135,163 | 1,399,128 | 18,459 | 589,321 | 214,480 | 40,097 | 2,125,123 | 16,940 |
| 73,239,684 | 2,455,318 | 10,236,573 | 3,729,280 | 40,250,997 | 600,602 | 16,981,827 | 65,790,119 | 1,373,007 | 5,746,963 | 1,302,772 |

This schedule is sponsored by PNM Witness Larkin

Allocated cost of service per billing unit of demand, energy, and customer by rate classification

# PNM L Series Schedules

## Schedule L-1: Allocated cost per billing unit of demand, energy and customer

# PNM Schedule L-1

Allocated cost of service per billing unit of demand, energy, and customer by rate classification

**Public Service Company of New Mexico**
**L-1 Allocated Cost per Billing Unit of Demand, Energy, and Customer**
Base Period Ending June 30, 2026
Test Period Ending September 30, 2028

| | Total PNM Consolidated | Schedule 1 Residential | Schedule 2 Small Power | Schedule 3B General Power | Schedule 3C General Power | Schedule 3D General Power | Schedule 3E General Power |
|---|---|---|---|---|---|---|---|
| **Base Period** | | | | | | | |
| Demand | 778,121,116 | 390,247,404 | 90,771,795 | 123,816,623 | 30,101,550 | 8,391,244 | 2,568,859 |
| Annual kWh | 9,730,359,257 | 3,250,481,865 | 960,997,406 | 1,404,746,448 | 317,813,761 | 100,376,217 | 23,680,787 |
| Unit Cost | 0.0800 | 0.1201 | 0.0945 | 0.0881 | 0.0947 | 0.0836 | 0.1085 |
| | | | | | | | |
| Energy Cost | 42,147,125 | 16,255,432 | 4,802,728 | 7,016,350 | 1,590,008 | 502,379 | 118,438 |
| Annual kWh | 9,730,359,257 | 3,250,481,865 | 960,997,406 | 1,404,746,448 | 317,813,761 | 100,376,217 | 23,680,787 |
| Unit Cost | 0.0043 | 0.0050 | 0.0050 | 0.0050 | 0.0050 | 0.0050 | 0.0050 |
| | | | | | | | |
| Customer Cost | 141,998,720 | 114,129,651 | 16,301,350 | 3,365,942 | 1,317,979 | 195,233 | 71,179 |
| Annual Bills | 6,697,992 | 5,983,997 | 654,976 | 34,601 | 13,785 | 1,924 | 953 |
| Unit Cost | 21.2002 | 19.0725 | 24.8885 | 97.2787 | 95.6097 | 101.4726 | 74.6891 |
| | | | | | | | |
| Total | 962,266,962 | 520,632,487 | 111,875,873 | 134,198,914 | 33,009,537 | 9,088,857 | 2,758,475 |
| | | | | | | | |
| **Test Period** | | | | | | | |
| Demand | 1,001,612,700 | 484,906,437 | 111,396,173 | 148,851,858 | 38,689,371 | 10,549,094 | 2,516,645 |
| Annual kWh | 9,835,733,247 | 3,392,380,292 | 957,006,510 | 1,428,703,394 | 359,972,539 | 108,709,528 | 22,956,121 |
| Unit Cost | 0.1018 | 0.1429 | 0.1164 | 0.1042 | 0.1075 | 0.0970 | 0.1096 |
| | | | | | | | |
| Energy Cost | 40,954,137 | 13,741,422 | 3,873,733 | 5,784,441 | 1,454,098 | 441,228 | 92,862 |
| Annual kWh | 9,835,733,247 | 3,392,380,292 | 957,006,510 | 1,428,703,394 | 359,972,539 | 108,709,528 | 22,956,121 |
| Unit Cost | 0.0042 | 0.0041 | 0.0040 | 0.0040 | 0.0040 | 0.0041 | 0.0040 |
| | | | | | | | |
| Customer Cost | 185,871,307 | 147,017,254 | 21,420,882 | 3,937,628 | 1,562,710 | 251,744 | 91,242 |
| Annual Bills | 6,853,399 | 6,126,151 | 667,256 | 33,812 | 15,282 | 2,010 | 874 |
| Unit Cost | 27.1210 | 23.9983 | 32.1030 | 116.4570 | 102.2604 | 125.2561 | 104.3777 |
| | | | | | | | |
| Total | 1,228,438,144 | 645,665,114 | 136,690,788 | 158,573,927 | 41,706,180 | 11,242,066 | 2,700,749 |

**Note 1: PNM is proposing to cancel Rate Schedule 5 as a result of this filing. Therefore, this schedule is only present in the historical Base Period.**

This schedule sponsored by PNM Witness Larkin

| Schedule 3F | Schedule 4 | Schedule 5[1] | Schedule 10 | Schedule 11 | Schedule 15 | Schedule 30 | Schedule 33B |
|---|---|---|---|---|---|---|---|
| General Power | Large Power | Mines | Irrigation | Water & Sewage | Universities | Manufacturing | Station Service |
| 833,176 | 54,572,729 | 833,200 | 2,038,785 | 9,390,935 | 2,941,217 | 26,762,328 | 337,282 |
| 6,775,436 | 838,553,439 | 11,736,480 | 22,940,885 | 170,461,468 | 67,136,266 | 621,332,201 | 3,089,705 |
| 0.1230 | 0.0651 | 0.0710 | 0.0889 | 0.0551 | 0.0438 | 0.0431 | 0.1092 |
| | | | | | | | |
| 33,897 | 4,186,035 | 58,738 | 115,709 | 853,527 | 338,496 | 3,111,408 | 15,399 |
| 6,775,436 | 838,553,439 | 11,736,480 | 22,940,885 | 170,461,468 | 67,136,266 | 621,332,201 | 3,089,705 |
| 0.0050 | 0.0050 | 0.0050 | 0.0050 | 0.0050 | 0.0050 | 0.0050 | 0.0050 |
| | | | | | | | |
| 16,631 | 1,105,865 | 10,059 | 268,989 | 695,406 | 51,359 | 386,709 | 9,154 |
| 180 | 1,863 | 12 | 3,774 | 1,829 | 12 | 12 | 12 |
| 92.3969 | 593.5934 | 838.2671 | 71.2742 | 380.2109 | 4,279.9034 | 32,225.7772 | 762.8172 |
| | | | | | | | |
| 883,704 | 59,864,629 | 901,997 | 2,423,484 | 10,939,868 | 3,331,071 | 30,260,446 | 361,835 |
| | | | | | | | |
| 1,297,688 | 76,575,549 | | 2,573,831 | 10,358,156 | 3,160,892 | 36,341,168 | 426,153 |
| 9,981,810 | 993,762,006 | | 24,480,916 | 166,836,465 | 73,221,947 | 729,887,686 | 13,530,374 |
| 0.1300 | 0.0771 | | 0.1051 | 0.0621 | 0.0432 | 0.0498 | 0.0315 |
| | | | | | | | |
| 40,372 | 4,048,819 | | 99,641 | 677,145 | 297,103 | 2,953,789 | 54,756 |
| 9,981,810 | 993,762,006 | | 24,480,916 | 166,836,465 | 73,221,947 | 729,887,686 | 13,530,374 |
| 0.0040 | 0.0041 | | 0.0041 | 0.0041 | 0.0041 | 0.0040 | 0.0040 |
| | | | | | | | |
| 30,456 | 1,505,109 | | 328,255 | 627,270 | 50,582 | 462,176 | 54,005 |
| 270 | 1,905 | | 3,787 | 1,836 | 12 | 12 | 120 |
| 112.8103 | 789.9065 | | 86.6810 | 341.6503 | 4,215.1331 | 38,514.6402 | 450.0413 |
| | | | | | | | |
| 1,368,516 | 82,129,477 | | 3,001,726 | 11,662,570 | 3,508,576 | 39,757,134 | 534,914 |

This schedule sponsored by PNM Witness Larkin

| Schedule 35B Large Power Service >3,000kW | Schedule 36B Special Service Rate Renew Energy Res | Schedule 6 Private Area Lighting | Schedule 20 Street Lighting |
|---|---|---|---|
| 7,405,995 | 23,689,084 | 821,348 | 2,597,562 |
| 154,641,451 | 1,733,213,257 | 11,456,517 | 30,925,669 |
| 0.0479 | 0.0137 | 0.0717 | 0.0840 |
| | | | |
| 770,422 | 2,166,346 | 57,257 | 154,555 |
| 154,641,451 | 1,733,213,257 | 11,456,517 | 30,925,669 |
| 0.0050 | 0.0012 | 0.0050 | 0.0050 |
| | | | |
| 109,004 | 262,697 | 513,832 | 3,187,683 |
| 50 | 12 | | |
| 2,180.0731 | 21,891.3799 | | |
| | | | |
| 8,285,420 | 26,118,126 | 1,392,436 | 5,939,800 |
| | | | |
| | | | |
| 15,413,465 | 54,616,222 | 1,060,176 | 2,879,821 |
| 304,623,175 | 1,207,718,596 | 11,427,648 | 30,534,240 |
| 0.0506 | 0.0452 | 0.0928 | 0.0943 |
| | | | |
| 1,233,157 | 5,991,360 | 46,284 | 123,927 |
| 304,623,175 | 1,207,718,596 | 11,427,648 | 30,534,240 |
| 0.0040 | 0.0050 | 0.0041 | 0.0041 |
| | | | |
| 213,811 | 932,779 | 533,868 | 6,851,536 |
| 60 | 12 | | |
| 3,563.5156 | 77,731.5947 | | |
| | | | |
| 16,860,433 | 61,540,361 | 1,640,328 | 9,855,285 |

This schedule sponsored by PNM Witness Larkin

Allocation factors

# PNM M Series Schedules

Schedule M-1: Allocation factors used to assign items of plant and expenses to the various rate classes

Schedule M-2: Classification factors used to assign items of plant and expenses to demand, energy, and customer

Schedule M-3: Demand and Energy Loss Factors

# PNM Schedule M-1

Allocation factors used to assign items of plant and expenses to the various rate classes

**PUBLIC SERVICE OF NEW MEXICO**
**Base Period Ending June 30th, 2026**

Class_Factors

| Line No. | Factor No. | | Other Input |
|---|---|---|---|
| 1 | | | |
| 2 | | **INDEPENDENT ALLOCATORS** | |
| 3 | 1 | RH_DEMAND | Risk Hour Demand |
| 4 | 2 | TRANS_12CP | Transmission Demand (based on 12CP) |
| 5 | 3 | NCP | Max Non Coincident Peak |
| 6 | 4 | NCP_SUBS | Max Non Coincident Peak - Substation Level |
| 7 | 5 | NCP_PRI | Max Non Coincident Peak - Primary Level |
| 8 | 6 | NCP_SEC | Max Non Coincident Peak - Secondary Level |
| 9 | 7 | STORAGE_3S1W | 3S1W Demand at Storage Dispatch Peak Hours |
| 10 | 8 | AVGDEMAND | Average Demand |
| 11 | 9 | ENERGY | Energy - kWh at Generation (used for Base Fuel Items) |
| 12 | 10 | ENERGY3 | ANNUAL KWH SALES @ METER (excl 36B) |
| 13 | 11 | ENERGY4 | Energy - kWh at Meter (Non-renewable only) |
| 14 | 12 | FUELREV | Current Fuel Revenues |
| 15 | 13 | REV | Current Non Fuel Revenues |
| 16 | 14 | CUST371 | Installation on Customer Premises - Direct Assignment |
| 17 | 15 | CUST373 | Street Lighting and Signal Systems - Direct Assignment |
| 18 | 16 | CUST_DEP | Customer Deposits |
| 19 | 17 | NFREV | Non-Fuel Revenues |
| 20 | 18 | ST_LIGHTS | Streetlight Energy - kWh at generation |
| 21 | 19 | CUST902 | 902-Meter Reading Expenses |
| 22 | 20 | CUST903 | 903-Customer Records and Collection Expenses |
| 23 | 21 | _EXP904 | Uncollectible Percentages |
| 24 | 22 | WTD_SERV | Customer Weighted Service Costs |
| 25 | 23 | WTD_METE | Customer Weighted Meter Costs |
| 26 | 24 | CUSTS | Annual Number of Customers |
| 27 | 25 | CUSTEXP | Weighted Customer/Energy Allocator |
| 28 | 26 | 36B_Dedicated | Dedicated 36B Allocator |
| 29 | 27 | STORAGE_3S1W | 3S1W Demand at Storage Dispatch Peak Hours Transmission |
| 30 | | | |
| 31 | | **DEPENDENT ALLOCATORS** | |
| 32 | 19 | NP_PRO_DTOT | Net Plant with GI - Production-Demand |
| 33 | 20 | NP_PRO_EFTOT | Net Plant with GI - Production-Energy-Fuel |
| 34 | 21 | NP_PRO_ENFTOT | Net Plant with GI - Production-Energy-Non-Fuel |
| 35 | 22 | NP_STO_PRO_DTOT | Net Plant with GI - Storage-Production-Demand |
| 36 | 23 | NP_STO_TRA_DTOT | Net Plant with GI - Storage-Transmission-Demand |
| 37 | 24 | NP_STO_DIS_DSUBTOT | Net Plant with GI - Storage-Distribution-Demand-Subs |
| 38 | 25 | NP_STO_DIS_DPRITOT | Net Plant with GI - Storage-Distribution-Demand-Primary |

**PUBLIC SERVICE OF NEW MEXICO**
**Base Period Ending June 30th, 2026**

| Class_Factors Line No. | Factor No. | | | PNM Retail | Schedule 1 Residential |
|---|---|---|---|---|---|
| | | | | | 1 |
| 1 | | | | | |
| 2 | | **INDEPENDENT ALLOCATORS** | | | |
| 3 | 1 | RH_DEMAND | Risk Hour Demand | 1.00000 | 0.50393 |
| 4 | 2 | TRANS_12CP | Transmission Demand (based on 12CP) | 1.00000 | 0.43201 |
| 5 | 3 | NCP | Max Non Coincident Peak | 1.00000 | 0.45319 |
| 6 | 4 | NCP_SUBS | Max Non Coincident Peak - Substation Level | 1.00000 | 0.51204 |
| 7 | 5 | NCP_PRI | Max Non Coincident Peak - Primary Level | 1.00000 | 0.53913 |
| 8 | 6 | NCP_SEC | Max Non Coincident Peak - Secondary Level | 1.00000 | 0.59629 |
| 9 | 7 | STORAGE_3S1W | 3S1W Demand at Storage Dispatch Peak Hours | - | - |
| 10 | 8 | AVGDEMAND | Average Demand | 1.00000 | 0.41030 |
| 11 | 9 | ENERGY | Energy - kWh at Generation (used for Base Fuel Items) | 1.00000 | 0.33911 |
| 12 | 10 | ENERGY3 | ANNUAL KWH SALES @ METER (excl 36B) | 1.00000 | 0.33406 |
| 13 | 11 | ENERGY4 | Energy - kWh at Meter (Non-renewable only) | 1.00000 | 0.38568 |
| 14 | 12 | FUELREV | Current Fuel Revenues | 1.00000 | 0.34679 |
| 15 | 13 | REV | Current Non Fuel Revenues | 1.00000 | 0.48069 |
| 16 | 14 | CUST371 | Installation on Customer Premises - Direct Assignment | 1.00000 | - |
| 17 | 15 | CUST373 | Street Lighting and Signal Systems - Direct Assignment | 1.00000 | - |
| 18 | 16 | CUST_DEP | Customer Deposits | 1.00000 | 0.86757 |
| 19 | 17 | NFREV | Non-Fuel Revenues | 1.00000 | 0.48069 |
| 20 | 18 | ST_LIGHTS | Streetlight Energy - kWh at generation | 1.00000 | - |
| 21 | 19 | CUST902 | 902-Meter Reading Expenses | 1.00000 | 0.89424 |
| 22 | 20 | CUST903 | 903-Customer Records and Collection Expenses | 1.00000 | 0.89424 |
| 23 | 21 | _EXP904 | Uncollectible Percentages | 1.00000 | 0.87580 |
| 24 | 22 | WTD_SERV | Customer Weighted Service Costs | 1.00000 | 0.91430 |
| 25 | 23 | WTD_METE | Customer Weighted Meter Costs | 1.00000 | 0.64381 |
| 26 | 24 | CUSTS | Annual Number of Customers | 1.00000 | 0.89424 |
| 27 | 25 | CUSTEXP | Weighted Customer/Energy Allocator | 1.00000 | 0.79253 |
| 28 | 26 | 36B_Dedicated | Dedicated 36B Allocator | 1.00000 | - |
| 29 | 27 | STORAGE_3S1W | 3S1W Demand at Storage Dispatch Peak Hours Transmission | - | - |
| 30 | | | | | |
| 31 | | **DEPENDENT ALLOCATORS** | | | |
| 32 | 19 | NP_PRO_DTOT | Net Plant with GI - Production-Demand | 1.00000 | 0.50393 |
| 33 | 20 | NP_PRO_EFTOT | Net Plant with GI - Production-Energy-Fuel | - | - |
| 34 | 21 | NP_PRO_ENFTOT | Net Plant with GI - Production-Energy-Non-Fuel | - | - |
| 35 | 22 | NP_STO_PRO_DTOT | Net Plant with GI - Storage-Production-Demand | 1.00000 | 0.50393 |
| 36 | 23 | NP_STO_TRA_DTOT | Net Plant with GI - Storage-Transmission-Demand | 1.00000 | 0.43201 |
| 37 | 24 | NP_STO_DIS_DSUBTOT | Net Plant with GI - Storage-Distribution-Demand-Subs | 1.00000 | 0.51204 |
| 38 | 25 | NP_STO_DIS_DPRITOT | Net Plant with GI - Storage-Distribution-Demand-Primary | 1.00000 | 0.53913 |

This schedule is sponsored by PNM Witness Larkin

**PUBLIC SERVICE OF NEW MEXICO**
**Base Period Ending June 30th, 2026**

| Class_Factors Line No. | Factor No. | | | Schedule 1B Residential 2 | Schedule 2 Small Power 3 |
|---|---|---|---|---|---|
| 1 | | | | | |
| 2 | | **INDEPENDENT ALLOCATORS** | | | |
| 3 | 1 | RH_DEMAND | Risk Hour Demand | - | 0.11338 |
| 4 | 2 | TRANS_12CP | Transmission Demand (based on 12CP) | - | 0.09969 |
| 5 | 3 | NCP | Max Non Coincident Peak | - | 0.10948 |
| 6 | 4 | NCP_SUBS | Max Non Coincident Peak - Substation Level | - | 0.12370 |
| 7 | 5 | NCP_PRI | Max Non Coincident Peak - Primary Level | - | 0.13024 |
| 8 | 6 | NCP_SEC | Max Non Coincident Peak - Secondary Level | - | 0.14405 |
| 9 | 7 | STORAGE_3S1W | 3S1W Demand at Storage Dispatch Peak Hours | - | - |
| 10 | 8 | AVGDEMAND | Average Demand | - | 0.11631 |
| 11 | 9 | ENERGY | Energy - kWh at Generation (used for Base Fuel Items) | - | 0.09613 |
| 12 | 10 | ENERGY3 | ANNUAL KWH SALES @ METER (excl 36B) | - | 0.09876 |
| 13 | 11 | ENERGY4 | Energy - kWh at Meter (Non-renewable only) | - | 0.11395 |
| 14 | 12 | FUELREV | Current Fuel Revenues | - | 0.10246 |
| 15 | 13 | REV | Current Non Fuel Revenues | - | 0.12323 |
| 16 | 14 | CUST371 | Installation on Customer Premises - Direct Assignment | - | - |
| 17 | 15 | CUST373 | Street Lighting and Signal Systems - Direct Assignment | - | - |
| 18 | 16 | CUST_DEP | Customer Deposits | - | 0.05544 |
| 19 | 17 | NFREV | Non-Fuel Revenues | - | 0.12323 |
| 20 | 18 | ST_LIGHTS | Streetlight Energy - kWh at generation | - | - |
| 21 | 19 | CUST902 | 902-Meter Reading Expenses | - | 0.09685 |
| 22 | 20 | CUST903 | 903-Customer Records and Collection Expenses | - | 0.09685 |
| 23 | 21 | _EXP904 | Uncollectible Percentages | - | 0.04194 |
| 24 | 22 | WTD_SERV | Customer Weighted Service Costs | - | 0.08570 |
| 25 | 23 | WTD_METE | Customer Weighted Meter Costs | - | 0.20874 |
| 26 | 24 | CUSTS | Annual Number of Customers | - | 0.09685 |
| 27 | 25 | CUSTEXP | Weighted Customer/Energy Allocator | - | 0.10027 |
| 28 | 26 | 36B_Dedicated | Dedicated 36B Allocator | - | - |
| 29 | 27 | STORAGE_3S1W | 3S1W Demand at Storage Dispatch Peak Hours Transmission | - | - |
| 30 | | | | | |
| 31 | | **DEPENDENT ALLOCATORS** | | | |
| 32 | 19 | NP_PRO_DTOT | Net Plant with GI - Production-Demand | 0.00000 | 0.11338 |
| 33 | 20 | NP_PRO_EFTOT | Net Plant with GI - Production-Energy-Fuel | - | - |
| 34 | 21 | NP_PRO_ENFTOT | Net Plant with GI - Production-Energy-Non-Fuel | - | - |
| 35 | 22 | NP_STO_PRO_DTOT | Net Plant with GI - Storage-Production-Demand | - | 0.11338 |
| 36 | 23 | NP_STO_TRA_DTOT | Net Plant with GI - Storage-Transmission-Demand | - | 0.09969 |
| 37 | 24 | NP_STO_DIS_DSUBTOT | Net Plant with GI - Storage-Distribution-Demand-Subs | - | 0.12370 |
| 38 | 25 | NP_STO_DIS_DPRITOT | Net Plant with GI - Storage-Distribution-Demand-Primary | - | 0.13024 |

This schedule is sponsored by PNM Witness Larkin

**PUBLIC SERVICE OF NEW MEXICO**
**Base Period Ending June 30th, 2026**

| Class_Factors Factor Line No. | No. | | | Schedule 2B Small Power 4 | Schedule 3B General Power 5 |
|---|---|---|---|---|---|
| 1 | | | | | |
| 2 | | **INDEPENDENT ALLOCATORS** | | | |
| 3 | 1 | RH_DEMAND | Risk Hour Demand | - | 0.16519 |
| 4 | 2 | TRANS_12CP | Transmission Demand (based on 12CP) | - | 0.14784 |
| 5 | 3 | NCP | Max Non Coincident Peak | - | 0.13264 |
| 6 | 4 | NCP_SUBS | Max Non Coincident Peak - Substation Level | - | 0.14987 |
| 7 | 5 | NCP_PRI | Max Non Coincident Peak - Primary Level | - | 0.15780 |
| 8 | 6 | NCP_SEC | Max Non Coincident Peak - Secondary Level | - | 0.17453 |
| 9 | 7 | STORAGE_3S1W | 3S1W Demand at Storage Dispatch Peak Hours | - | - |
| 10 | 8 | AVGDEMAND | Average Demand | - | 0.17748 |
| 11 | 9 | ENERGY | Energy - kWh at Generation (used for Base Fuel Items) | - | 0.14668 |
| 12 | 10 | ENERGY3 | ANNUAL KWH SALES @ METER (excl 36B) | - | 0.14437 |
| 13 | 11 | ENERGY4 | Energy - kWh at Meter (Non-renewable only) | - | 0.16647 |
| 14 | 12 | FUELREV | Current Fuel Revenues | - | 0.14969 |
| 15 | 13 | REV | Current Non Fuel Revenues | - | 0.13334 |
| 16 | 14 | CUST371 | Installation on Customer Premises - Direct Assignment | - | - |
| 17 | 15 | CUST373 | Street Lighting and Signal Systems - Direct Assignment | - | - |
| 18 | 16 | CUST_DEP | Customer Deposits | - | 0.07699 |
| 19 | 17 | NFREV | Non-Fuel Revenues | - | 0.13334 |
| 20 | 18 | ST_LIGHTS | Streetlight Energy - kWh at generation | - | - |
| 21 | 19 | CUST902 | 902-Meter Reading Expenses | - | 0.00502 |
| 22 | 20 | CUST903 | 903-Customer Records and Collection Expenses | - | 0.00502 |
| 23 | 21 | _EXP904 | Uncollectible Percentages | - | 0.05824 |
| 24 | 22 | WTD_SERV | Customer Weighted Service Costs | - | - |
| 25 | 23 | WTD_METE | Customer Weighted Meter Costs | - | 0.06274 |
| 26 | 24 | CUSTS | Annual Number of Customers | - | 0.00502 |
| 27 | 25 | CUSTEXP | Weighted Customer/Energy Allocator | - | 0.03731 |
| 28 | 26 | 36B_Dedicated | Dedicated 36B Allocator | - | - |
| 29 | 27 | STORAGE_3S1W | 3S1W Demand at Storage Dispatch Peak Hours Transmission | - | - |
| 30 | | | | | |
| 31 | | **DEPENDENT ALLOCATORS** | | | |
| 32 | 19 | NP_PRO_DTOT | Net Plant with GI - Production-Demand | 0.00000 | 0.16519 |
| 33 | 20 | NP_PRO_EFTOT | Net Plant with GI - Production-Energy-Fuel | - | - |
| 34 | 21 | NP_PRO_ENFTOT | Net Plant with GI - Production-Energy-Non-Fuel | - | - |
| 35 | 22 | NP_STO_PRO_DTOT | Net Plant with GI - Storage-Production-Demand | - | 0.16519 |
| 36 | 23 | NP_STO_TRA_DTOT | Net Plant with GI - Storage-Transmission-Demand | - | 0.14784 |
| 37 | 24 | NP_STO_DIS_DSUBTOT | Net Plant with GI - Storage-Distribution-Demand-Subs | - | 0.14987 |
| 38 | 25 | NP_STO_DIS_DPRITOT | Net Plant with GI - Storage-Distribution-Demand-Primary | - | 0.15780 |

This schedule is sponsored by PNM Witness Larkin

**PUBLIC SERVICE OF NEW MEXICO**
**Base Period Ending June 30th, 2026**

| Class_Factors Line No. | Factor No. | | | Schedule 3C GP Low LF 6 | Schedule 3D General Power Gov 7 |
|---|---|---|---|---|---|
| 1 | | | | | |
| 2 | | **INDEPENDENT ALLOCATORS** | | | |
| 3 | 1 | RH_DEMAND | Risk Hour Demand | 0.03486 | 0.01121 |
| 4 | 2 | TRANS_12CP | Transmission Demand (based on 12CP) | 0.02995 | 0.01015 |
| 5 | 3 | NCP | Max Non Coincident Peak | 0.04066 | 0.00891 |
| 6 | 4 | NCP_SUBS | Max Non Coincident Peak - Substation Level | 0.04594 | 0.01006 |
| 7 | 5 | NCP_PRI | Max Non Coincident Peak - Primary Level | 0.04837 | 0.01060 |
| 8 | 6 | NCP_SEC | Max Non Coincident Peak - Secondary Level | 0.05349 | 0.01172 |
| 9 | 7 | STORAGE_3S1W | 3S1W Demand at Storage Dispatch Peak Hours | - | - |
| 10 | 8 | AVGDEMAND | Average Demand | 0.04017 | 0.01282 |
| 11 | 9 | ENERGY | Energy - kWh at Generation (used for Base Fuel Items) | 0.03320 | 0.01059 |
| 12 | 10 | ENERGY3 | ANNUAL KWH SALES @ METER (excl 36B) | 0.03266 | 0.01032 |
| 13 | 11 | ENERGY4 | Energy - kWh at Meter (Non-renewable only) | 0.03773 | 0.01192 |
| 14 | 12 | FUELREV | Current Fuel Revenues | 0.03392 | 0.01072 |
| 15 | 13 | REV | Current Non Fuel Revenues | 0.03692 | 0.00920 |
| 16 | 14 | CUST371 | Installation on Customer Premises - Direct Assignment | - | - |
| 17 | 15 | CUST373 | Street Lighting and Signal Systems - Direct Assignment | - | - |
| 18 | 16 | CUST_DEP | Customer Deposits | - | - |
| 19 | 17 | NFREV | Non-Fuel Revenues | 0.03692 | 0.00920 |
| 20 | 18 | ST_LIGHTS | Streetlight Energy - kWh at generation | - | - |
| 21 | 19 | CUST902 | 902-Meter Reading Expenses | 0.00220 | 0.00031 |
| 22 | 20 | CUST903 | 903-Customer Records and Collection Expenses | 0.00220 | 0.00031 |
| 23 | 21 | _EXP904 | Uncollectible Percentages | 0.02402 | - |
| 24 | 22 | WTD_SERV | Customer Weighted Service Costs | - | - |
| 25 | 23 | WTD_METE | Customer Weighted Meter Costs | 0.02751 | 0.00388 |
| 26 | 24 | CUSTS | Annual Number of Customers | 0.00220 | 0.00031 |
| 27 | 25 | CUSTEXP | Weighted Customer/Energy Allocator | 0.00931 | 0.00263 |
| 28 | 26 | 36B_Dedicated | Dedicated 36B Allocator | - | - |
| 29 | 27 | STORAGE_3S1W | 3S1W Demand at Storage Dispatch Peak Hours Transmission | - | - |
| 30 | | | | | |
| 31 | | **DEPENDENT ALLOCATORS** | | | |
| 32 | 19 | NP_PRO_DTOT | Net Plant with GI - Production-Demand | 0.03486 | 0.01121 |
| 33 | 20 | NP_PRO_EFTOT | Net Plant with GI - Production-Energy-Fuel | - | - |
| 34 | 21 | NP_PRO_ENFTOT | Net Plant with GI - Production-Energy-Non-Fuel | - | - |
| 35 | 22 | NP_STO_PRO_DTOT | Net Plant with GI - Storage-Production-Demand | 0.03486 | 0.01121 |
| 36 | 23 | NP_STO_TRA_DTOT | Net Plant with GI - Storage-Transmission-Demand | 0.02995 | 0.01015 |
| 37 | 24 | NP_STO_DIS_DSUBTOT | Net Plant with GI - Storage-Distribution-Demand-Subs | 0.04594 | 0.01006 |
| 38 | 25 | NP_STO_DIS_DPRITOT | Net Plant with GI - Storage-Distribution-Demand-Primary | 0.04837 | 0.01060 |

This schedule is sponsored by PNM Witness Larkin

**PUBLIC SERVICE OF NEW MEXICO**
**Base Period Ending June 30th, 2026**

| Class_Factors Line No. | Factor No. | | | Schedule 3E GP Low LF Gov 8 |
|---|---|---|---|---|
| 1 | | | | |
| 2 | | **INDEPENDENT ALLOCATORS** | | |
| 3 | 1 | RH_DEMAND | Risk Hour Demand | 0.00287 |
| 4 | 2 | TRANS_12CP | Transmission Demand (based on 12CP) | 0.00241 |
| 5 | 3 | NCP | Max Non Coincident Peak | 0.00365 |
| 6 | 4 | NCP_SUBS | Max Non Coincident Peak - Substation Level | 0.00412 |
| 7 | 5 | NCP_PRI | Max Non Coincident Peak - Primary Level | 0.00434 |
| 8 | 6 | NCP_SEC | Max Non Coincident Peak - Secondary Level | 0.00480 |
| 9 | 7 | STORAGE_3S1W | 3S1W Demand at Storage Dispatch Peak Hours | - |
| 10 | 8 | AVGDEMAND | Average Demand | 0.00315 |
| 11 | 9 | ENERGY | Energy - kWh at Generation (used for Base Fuel Items) | 0.00260 |
| 12 | 10 | ENERGY3 | ANNUAL KWH SALES @ METER (excl 36B) | 0.00243 |
| 13 | 11 | ENERGY4 | Energy - kWh at Meter (Non-renewable only) | 0.00281 |
| 14 | 12 | FUELREV | Current Fuel Revenues | 0.00253 |
| 15 | 13 | REV | Current Non Fuel Revenues | 0.00291 |
| 16 | 14 | CUST371 | Installation on Customer Premises - Direct Assignment | - |
| 17 | 15 | CUST373 | Street Lighting and Signal Systems - Direct Assignment | - |
| 18 | 16 | CUST_DEP | Customer Deposits | - |
| 19 | 17 | NFREV | Non-Fuel Revenues | 0.00291 |
| 20 | 18 | ST_LIGHTS | Streetlight Energy - kWh at generation | - |
| 21 | 19 | CUST902 | 902-Meter Reading Expenses | 0.00013 |
| 22 | 20 | CUST903 | 903-Customer Records and Collection Expenses | 0.00013 |
| 23 | 21 | _EXP904 | Uncollectible Percentages | - |
| 24 | 22 | WTD_SERV | Customer Weighted Service Costs | - |
| 25 | 23 | WTD_METE | Customer Weighted Meter Costs | 0.00161 |
| 26 | 24 | CUSTS | Annual Number of Customers | 0.00013 |
| 27 | 25 | CUSTEXP | Weighted Customer/Energy Allocator | 0.00066 |
| 28 | 26 | 36B_Dedicated | Dedicated 36B Allocator | - |
| 29 | 27 | STORAGE_3S1W | 3S1W Demand at Storage Dispatch Peak Hours Transmission | - |
| 30 | | | | |
| 31 | | **DEPENDENT ALLOCATORS** | | |
| 32 | 19 | NP_PRO_DTOT | Net Plant with GI - Production-Demand | 0.00287 |
| 33 | 20 | NP_PRO_EFTOT | Net Plant with GI - Production-Energy-Fuel | - |
| 34 | 21 | NP_PRO_ENFTOT | Net Plant with GI - Production-Energy-Non-Fuel | - |
| 35 | 22 | NP_STO_PRO_DTOT | Net Plant with GI - Storage-Production-Demand | 0.00287 |
| 36 | 23 | NP_STO_TRA_DTOT | Net Plant with GI - Storage-Transmission-Demand | 0.00241 |
| 37 | 24 | NP_STO_DIS_DSUBTOT | Net Plant with GI - Storage-Distribution-Demand-Subs | 0.00412 |
| 38 | 25 | NP_STO_DIS_DPRITOT | Net Plant with GI - Storage-Distribution-Demand-Primary | 0.00434 |

This schedule is sponsored by PNM Witness Larkin

**PUBLIC SERVICE OF NEW MEXICO**
**Base Period Ending June 30th, 2026**

| Class_Factors Line No. | Factor No. | | | Schedule 3F GP Charging Stations 9 | Schedule 4 Large Power 10 |
|---|---|---|---|---|---|
| 1 | | | | | |
| 2 | | **INDEPENDENT ALLOCATORS** | | | |
| 3 | 1 | RH_DEMAND | Risk Hour Demand | 0.00070 | 0.08252 |
| 4 | 2 | TRANS_12CP | Transmission Demand (based on 12CP) | 0.00054 | 0.07353 |
| 5 | 3 | NCP | Max Non Coincident Peak | 0.00154 | 0.06037 |
| 6 | 4 | NCP_SUBS | Max Non Coincident Peak - Substation Level | 0.00174 | 0.06821 |
| 7 | 5 | NCP_PRI | Max Non Coincident Peak - Primary Level | 0.00184 | 0.07182 |
| 8 | 6 | NCP_SEC | Max Non Coincident Peak - Secondary Level | 0.00203 | - |
| 9 | 7 | STORAGE_3S1W | 3S1W Demand at Storage Dispatch Peak Hours | - | - |
| 10 | 8 | AVGDEMAND | Average Demand | 0.00086 | 0.10403 |
| 11 | 9 | ENERGY | Energy - kWh at Generation (used for Base Fuel Items) | 0.00071 | 0.08598 |
| 12 | 10 | ENERGY3 | ANNUAL KWH SALES @ METER (excl 36B) | 0.00070 | 0.08618 |
| 13 | 11 | ENERGY4 | Energy - kWh at Meter (Non-renewable only) | 0.00080 | 0.09932 |
| 14 | 12 | FUELREV | Current Fuel Revenues | 0.00072 | 0.08930 |
| 15 | 13 | REV | Current Non Fuel Revenues | 0.00071 | 0.06391 |
| 16 | 14 | CUST371 | Installation on Customer Premises - Direct Assignment | - | - |
| 17 | 15 | CUST373 | Street Lighting and Signal Systems - Direct Assignment | - | - |
| 18 | 16 | CUST_DEP | Customer Deposits | - | - |
| 19 | 17 | NFREV | Non-Fuel Revenues | 0.00071 | 0.06391 |
| 20 | 18 | ST_LIGHTS | Streetlight Energy - kWh at generation | - | - |
| 21 | 19 | CUST902 | 902-Meter Reading Expenses | 0.00003 | 0.00031 |
| 22 | 20 | CUST903 | 903-Customer Records and Collection Expenses | 0.00003 | 0.00031 |
| 23 | 21 | _EXP904 | Uncollectible Percentages | - | - |
| 24 | 22 | WTD_SERV | Customer Weighted Service Costs | - | - |
| 25 | 23 | WTD_METE | Customer Weighted Meter Costs | 0.00036 | 0.02084 |
| 26 | 24 | CUSTS | Annual Number of Customers | 0.00003 | 0.00031 |
| 27 | 25 | CUSTEXP | Weighted Customer/Energy Allocator | 0.00018 | 0.02011 |
| 28 | 26 | 36B_Dedicated | Dedicated 36B Allocator | - | - |
| 29 | 27 | STORAGE_3S1W | 3S1W Demand at Storage Dispatch Peak Hours Transmission | - | - |
| 30 | | | | | |
| 31 | | **DEPENDENT ALLOCATORS** | | | |
| 32 | 19 | NP_PRO_DTOT | Net Plant with GI - Production-Demand | 0.00070 | 0.08252 |
| 33 | 20 | NP_PRO_EFTOT | Net Plant with GI - Production-Energy-Fuel | - | - |
| 34 | 21 | NP_PRO_ENFTOT | Net Plant with GI - Production-Energy-Non-Fuel | - | - |
| 35 | 22 | NP_STO_PRO_DTOT | Net Plant with GI - Storage-Production-Demand | 0.00070 | 0.08252 |
| 36 | 23 | NP_STO_TRA_DTOT | Net Plant with GI - Storage-Transmission-Demand | 0.00054 | 0.07353 |
| 37 | 24 | NP_STO_DIS_DSUBTOT | Net Plant with GI - Storage-Distribution-Demand-Subs | 0.00174 | 0.06821 |
| 38 | 25 | NP_STO_DIS_DPRITOT | Net Plant with GI - Storage-Distribution-Demand-Primary | 0.00184 | 0.07182 |

This schedule is sponsored by PNM Witness Larkin

**PUBLIC SERVICE OF NEW MEXICO**
**Base Period Ending June 30th, 2026**

| Class_Factors Line No. | Factor No. | | | Schedule 5 Industrial Power 11 | Schedule 10 Irrigation 12 |
|---|---|---|---|---|---|
| 1 | | | | | |
| 2 | | **INDEPENDENT ALLOCATORS** | | | |
| 3 | 1 | RH_DEMAND | Risk Hour Demand | 0.00173 | 0.00235 |
| 4 | 2 | TRANS_12CP | Transmission Demand (based on 12CP) | 0.00154 | 0.00201 |
| 5 | 3 | NCP | Max Non Coincident Peak | 0.00126 | 0.00277 |
| 6 | 4 | NCP_SUBS | Max Non Coincident Peak - Substation Level | - | 0.00313 |
| 7 | 5 | NCP_PRI | Max Non Coincident Peak - Primary Level | - | 0.00330 |
| 8 | 6 | NCP_SEC | Max Non Coincident Peak - Secondary Level | - | 0.00365 |
| 9 | 7 | STORAGE_3S1W | 3S1W Demand at Storage Dispatch Peak Hours | - | - |
| 10 | 8 | AVGDEMAND | Average Demand | 0.00143 | 0.00290 |
| 11 | 9 | ENERGY | Energy - kWh at Generation (used for Base Fuel Items) | 0.00118 | 0.00239 |
| 12 | 10 | ENERGY3 | ANNUAL KWH SALES @ METER (excl 36B) | 0.00121 | 0.00236 |
| 13 | 11 | ENERGY4 | Energy - kWh at Meter (Non-renewable only) | 0.00139 | 0.00275 |
| 14 | 12 | FUELREV | Current Fuel Revenues | 0.00125 | 0.00247 |
| 15 | 13 | REV | Current Non Fuel Revenues | 0.00153 | 0.00237 |
| 16 | 14 | CUST371 | Installation on Customer Premises - Direct Assignment | - | - |
| 17 | 15 | CUST373 | Street Lighting and Signal Systems - Direct Assignment | - | - |
| 18 | 16 | CUST_DEP | Customer Deposits | - | - |
| 19 | 17 | NFREV | Non-Fuel Revenues | 0.00153 | 0.00237 |
| 20 | 18 | ST_LIGHTS | Streetlight Energy - kWh at generation | - | - |
| 21 | 19 | CUST902 | 902-Meter Reading Expenses | 0.00000 | 0.00056 |
| 22 | 20 | CUST903 | 903-Customer Records and Collection Expenses | 0.00000 | 0.00056 |
| 23 | 21 | _EXP904 | Uncollectible Percentages | - | - |
| 24 | 22 | WTD_SERV | Customer Weighted Service Costs | - | - |
| 25 | 23 | WTD_METE | Customer Weighted Meter Costs | 0.00012 | 0.00705 |
| 26 | 24 | CUSTS | Annual Number of Customers | 0.00000 | 0.00056 |
| 27 | 25 | CUSTEXP | Weighted Customer/Energy Allocator | 0.00028 | 0.00100 |
| 28 | 26 | 36B_Dedicated | Dedicated 36B Allocator | - | - |
| 29 | 27 | STORAGE_3S1W | 3S1W Demand at Storage Dispatch Peak Hours Transmission | - | - |
| 30 | | | | | |
| 31 | | **DEPENDENT ALLOCATORS** | | | |
| 32 | 19 | NP_PRO_DTOT | Net Plant with GI - Production-Demand | 0.00173 | 0.00235 |
| 33 | 20 | NP_PRO_EFTOT | Net Plant with GI - Production-Energy-Fuel | - | - |
| 34 | 21 | NP_PRO_ENFTOT | Net Plant with GI - Production-Energy-Non-Fuel | - | - |
| 35 | 22 | NP_STO_PRO_DTOT | Net Plant with GI - Storage-Production-Demand | 0.00173 | 0.00235 |
| 36 | 23 | NP_STO_TRA_DTOT | Net Plant with GI - Storage-Transmission-Demand | 0.00154 | 0.00201 |
| 37 | 24 | NP_STO_DIS_DSUBTOT | Net Plant with GI - Storage-Distribution-Demand-Subs | - | 0.00313 |
| 38 | 25 | NP_STO_DIS_DPRITOT | Net Plant with GI - Storage-Distribution-Demand-Primary | - | 0.00330 |

This schedule is sponsored by PNM Witness Larkin

**PUBLIC SERVICE OF NEW MEXICO**
**Base Period Ending June 30th, 2026**

| Class_Factors Line No. | Factor No. | | | Schedule 11 Water & Sewage 13 | Schedule 15 Industrial Power 14 |
|---|---|---|---|---|---|
| 1 | | | | | |
| 2 | | **INDEPENDENT ALLOCATORS** | | | |
| 3 | 1 | RH_DEMAND | Risk Hour Demand | 0.00856 | 0.01 |
| 4 | 2 | TRANS_12CP | Transmission Demand (based on 12CP) | 0.00926 | 0.01 |
| 5 | 3 | NCP | Max Non Coincident Peak | 0.02021 | 0.01 |
| 6 | 4 | NCP_SUBS | Max Non Coincident Peak - Substation Level | 0.02284 | - |
| 7 | 5 | NCP_PRI | Max Non Coincident Peak - Primary Level | 0.02405 | - |
| 8 | 6 | NCP_SEC | Max Non Coincident Peak - Secondary Level | - | - |
| 9 | 7 | STORAGE_3S1W | 3S1W Demand at Storage Dispatch Peak Hours | - | - |
| 10 | 8 | AVGDEMAND | Average Demand | 0.02172 | 0.01 |
| 11 | 9 | ENERGY | Energy - kWh at Generation (used for Base Fuel Items) | 0.01795 | 0.01 |
| 12 | 10 | ENERGY3 | ANNUAL KWH SALES @ METER (excl 36B) | 0.01752 | 0.01 |
| 13 | 11 | ENERGY4 | Energy - kWh at Meter (Non-renewable only) | 0.02025 | 0.01 |
| 14 | 12 | FUELREV | Current Fuel Revenues | 0.01821 | 0.01 |
| 15 | 13 | REV | Current Non Fuel Revenues | 0.01074 | 0.00 |
| 16 | 14 | CUST371 | Installation on Customer Premises - Direct Assignment | - | - |
| 17 | 15 | CUST373 | Street Lighting and Signal Systems - Direct Assignment | - | - |
| 18 | 16 | CUST_DEP | Customer Deposits | - | - |
| 19 | 17 | NFREV | Non-Fuel Revenues | 0.01074 | 0.00 |
| 20 | 18 | ST_LIGHTS | Streetlight Energy - kWh at generation | - | - |
| 21 | 19 | CUST902 | 902-Meter Reading Expenses | 0.00029 | 0.00 |
| 22 | 20 | CUST903 | 903-Customer Records and Collection Expenses | 0.00029 | 0.00 |
| 23 | 21 | _EXP904 | Uncollectible Percentages | - | - |
| 24 | 22 | WTD_SERV | Customer Weighted Service Costs | - | - |
| 25 | 23 | WTD_METE | Customer Weighted Meter Costs | 0.01917 | 0.00 |
| 26 | 24 | CUSTS | Annual Number of Customers | 0.00029 | 0.00 |
| 27 | 25 | CUSTEXP | Weighted Customer/Energy Allocator | 0.00428 | 0.00 |
| 28 | 26 | 36B_Dedicated | Dedicated 36B Allocator | - | - |
| 29 | 27 | STORAGE_3S1W | 3S1W Demand at Storage Dispatch Peak Hours Transmission | - | - |
| 30 | | | | | |
| 31 | | **DEPENDENT ALLOCATORS** | | | |
| 32 | 19 | NP_PRO_DTOT | Net Plant with GI - Production-Demand | 0.00856 | 0.01 |
| 33 | 20 | NP_PRO_EFTOT | Net Plant with GI - Production-Energy-Fuel | - | - |
| 34 | 21 | NP_PRO_ENFTOT | Net Plant with GI - Production-Energy-Non-Fuel | - | - |
| 35 | 22 | NP_STO_PRO_DTOT | Net Plant with GI - Storage-Production-Demand | 0.00856 | 0.01 |
| 36 | 23 | NP_STO_TRA_DTOT | Net Plant with GI - Storage-Transmission-Demand | 0.00926 | 0.01 |
| 37 | 24 | NP_STO_DIS_DSUBTOT | Net Plant with GI - Storage-Distribution-Demand-Subs | 0.02284 | - |
| 38 | 25 | NP_STO_DIS_DPRITOT | Net Plant with GI - Storage-Distribution-Demand-Primary | 0.02405 | - |

This schedule is sponsored by PNM Witness Larkin

**PUBLIC SERVICE OF NEW MEXICO**
**Base Period Ending June 30th, 2026**

| Class_Factors Line No. | Factor No. | | | Schedule 30 Industrial Power 15 | Schedule 33B Large Service 16 |
|---|---|---|---|---|---|
| 1 | | | | | |
| 2 | | **INDEPENDENT ALLOCATORS** | | | |
| 3 | 1 | RH_DEMAND | Risk Hour Demand | 0.05053 | 0.00069 |
| 4 | 2 | TRANS_12CP | Transmission Demand (based on 12CP) | 0.04483 | 0.00065 |
| 5 | 3 | NCP | Max Non Coincident Peak | 0.03398 | 0.00171 |
| 6 | 4 | NCP_SUBS | Max Non Coincident Peak - Substation Level | 0.03839 | - |
| 7 | 5 | NCP_PRI | Max Non Coincident Peak - Primary Level | - | - |
| 8 | 6 | NCP_SEC | Max Non Coincident Peak - Secondary Level | - | - |
| 9 | 7 | STORAGE_3S1W | 3S1W Demand at Storage Dispatch Peak Hours | - | - |
| 10 | 8 | AVGDEMAND | Average Demand | 0.07605 | 0.00037 |
| 11 | 9 | ENERGY | Energy - kWh at Generation (used for Base Fuel Items) | 0.06285 | 0.00031 |
| 12 | 10 | ENERGY3 | ANNUAL KWH SALES @ METER (excl 36B) | 0.06386 | 0.00032 |
| 13 | 11 | ENERGY4 | Energy - kWh at Meter (Non-renewable only) | 0.07382 | 0.00037 |
| 14 | 12 | FUELREV | Current Fuel Revenues | 0.06638 | 0.00033 |
| 15 | 13 | REV | Current Non Fuel Revenues | 0.02966 | 0.00023 |
| 16 | 14 | CUST371 | Installation on Customer Premises - Direct Assignment | - | - |
| 17 | 15 | CUST373 | Street Lighting and Signal Systems - Direct Assignment | - | - |
| 18 | 16 | CUST_DEP | Customer Deposits | - | - |
| 19 | 17 | NFREV | Non-Fuel Revenues | 0.02966 | 0.00023 |
| 20 | 18 | ST_LIGHTS | Streetlight Energy - kWh at generation | - | - |
| 21 | 19 | CUST902 | 902-Meter Reading Expenses | 0.00002 | 0.00000 |
| 22 | 20 | CUST903 | 903-Customer Records and Collection Expenses | 0.00002 | 0.00000 |
| 23 | 21 | _EXP904 | Uncollectible Percentages | - | - |
| 24 | 22 | WTD_SERV | Customer Weighted Service Costs | - | - |
| 25 | 23 | WTD_METE | Customer Weighted Meter Costs | 0.00167 | 0.00024 |
| 26 | 24 | CUSTS | Annual Number of Customers | 0.00002 | 0.00000 |
| 27 | 25 | CUSTEXP | Weighted Customer/Energy Allocator | 0.01478 | 0.00008 |
| 28 | 26 | 36B_Dedicated | Dedicated 36B Allocator | - | - |
| 29 | 27 | STORAGE_3S1W | 3S1W Demand at Storage Dispatch Peak Hours Transmission | - | - |
| 30 | | | | | |
| 31 | | **DEPENDENT ALLOCATORS** | | | |
| 32 | 19 | NP_PRO_DTOT | Net Plant with GI - Production-Demand | 0.05053 | 0.00069 |
| 33 | 20 | NP_PRO_EFTOT | Net Plant with GI - Production-Energy-Fuel | - | - |
| 34 | 21 | NP_PRO_ENFTOT | Net Plant with GI - Production-Energy-Non-Fuel | - | - |
| 35 | 22 | NP_STO_PRO_DTOT | Net Plant with GI - Storage-Production-Demand | 0.05053 | 0.00069 |
| 36 | 23 | NP_STO_TRA_DTOT | Net Plant with GI - Storage-Transmission-Demand | 0.04483 | 0.00065 |
| 37 | 24 | NP_STO_DIS_DSUBTOT | Net Plant with GI - Storage-Distribution-Demand-Subs | 0.03839 | - |
| 38 | 25 | NP_STO_DIS_DPRITOT | Net Plant with GI - Storage-Distribution-Demand-Primary | - | - |

This schedule is sponsored by PNM Witness Larkin

**PUBLIC SERVICE OF NEW MEXICO**
**Base Period Ending June 30th, 2026**

| Class_Factors Line No. | Factor No. | | | Schedule 35B Lg Power Service 17 | Schedule 36B Special Service Rate 18 |
|---|---|---|---|---|---|
| 1 | | | | | |
| 2 | | **INDEPENDENT ALLOCATORS** | | | |
| 3 | 1 | RH_DEMAND | Risk Hour Demand | 0.01400 | - |
| 4 | 2 | TRANS_12CP | Transmission Demand (based on 12CP) | 0.01197 | 0.12500 |
| 5 | 3 | NCP | Max Non Coincident Peak | 0.01049 | 0.10475 |
| 6 | 4 | NCP_SUBS | Max Non Coincident Peak - Substation Level | 0.01185 | - |
| 7 | 5 | NCP_PRI | Max Non Coincident Peak - Primary Level | - | - |
| 8 | 6 | NCP_SEC | Max Non Coincident Peak - Secondary Level | - | - |
| 9 | 7 | STORAGE_3S1W | 3S1W Demand at Storage Dispatch Peak Hours | - | - |
| 10 | 8 | AVGDEMAND | Average Demand | 0.01893 | - |
| 11 | 9 | ENERGY | Energy - kWh at Generation (used for Base Fuel Items) | 0.01564 | 0.17353 |
| 12 | 10 | ENERGY3 | ANNUAL KWH SALES @ METER (excl 36B) | 0.01589 | 0.17812 |
| 13 | 11 | ENERGY4 | Energy - kWh at Meter (Non-renewable only) | 0.01828 | 0.05140 |
| 14 | 12 | FUELREV | Current Fuel Revenues | 0.01644 | 0.14705 |
| 15 | 13 | REV | Current Non Fuel Revenues | 0.00732 | 0.08411 |
| 16 | 14 | CUST371 | Installation on Customer Premises - Direct Assignment | - | - |
| 17 | 15 | CUST373 | Street Lighting and Signal Systems - Direct Assignment | - | - |
| 18 | 16 | CUST_DEP | Customer Deposits | - | - |
| 19 | 17 | NFREV | Non-Fuel Revenues | 0.00732 | 0.08411 |
| 20 | 18 | ST_LIGHTS | Streetlight Energy - kWh at generation | - | - |
| 21 | 19 | CUST902 | 902-Meter Reading Expenses | 0.00001 | 0.00001 |
| 22 | 20 | CUST903 | 903-Customer Records and Collection Expenses | 0.00001 | 0.00001 |
| 23 | 21 | _EXP904 | Uncollectible Percentages | - | - |
| 24 | 22 | WTD_SERV | Customer Weighted Service Costs | - | - |
| 25 | 23 | WTD_METE | Customer Weighted Meter Costs | 0.00083 | 0.00095 |
| 26 | 24 | CUSTS | Annual Number of Customers | 0.00001 | 0.00001 |
| 27 | 25 | CUSTEXP | Weighted Customer/Energy Allocator | 0.00367 | 0.01029 |
| 28 | 26 | 36B_Dedicated | Dedicated 36B Allocator | - | - |
| 29 | 27 | STORAGE_3S1W | 3S1W Demand at Storage Dispatch Peak Hours Transmission | - | - |
| 30 | | | | | |
| 31 | | **DEPENDENT ALLOCATORS** | | | |
| 32 | 19 | NP_PRO_DTOT | Net Plant with GI - Production-Demand | 0.01400 | - |
| 33 | 20 | NP_PRO_EFTOT | Net Plant with GI - Production-Energy-Fuel | - | - |
| 34 | 21 | NP_PRO_ENFTOT | Net Plant with GI - Production-Energy-Non-Fuel | - | - |
| 35 | 22 | NP_STO_PRO_DTOT | Net Plant with GI - Storage-Production-Demand | 0.01400 | - |
| 36 | 23 | NP_STO_TRA_DTOT | Net Plant with GI - Storage-Transmission-Demand | 0.01197 | 0.12500 |
| 37 | 24 | NP_STO_DIS_DSUBTOT | Net Plant with GI - Storage-Distribution-Demand-Subs | 0.01185 | - |
| 38 | 25 | NP_STO_DIS_DPRITOT | Net Plant with GI - Storage-Distribution-Demand-Primary | - | - |

This schedule is sponsored by PNM Witness Larkin

**PUBLIC SERVICE OF NEW MEXICO**
**Base Period Ending June 30th, 2026**

| Class_Factors Line No. | Factor No. | | | Schedule 6 Priv. Area Light 19 | Schedule 20 Streetlighting 20 |
|---|---|---|---|---|---|
| 1 | | | | | |
| 2 | | **INDEPENDENT ALLOCATORS** | | | |
| 3 | 1 | RH_DEMAND | Risk Hour Demand | 0.00037 | 0.00100 |
| 4 | 2 | TRANS_12CP | Transmission Demand (based on 12CP) | 0.00088 | 0.00232 |
| 5 | 3 | NCP | Max Non Coincident Peak | 0.00162 | 0.00555 |
| 6 | 4 | NCP_SUBS | Max Non Coincident Peak - Substation Level | 0.00183 | 0.00627 |
| 7 | 5 | NCP_PRI | Max Non Coincident Peak - Primary Level | 0.00193 | 0.00660 |
| 8 | 6 | NCP_SEC | Max Non Coincident Peak - Secondary Level | 0.00213 | 0.00730 |
| 9 | 7 | STORAGE_3S1W | 3S1W Demand at Storage Dispatch Peak Hours | - | - |
| 10 | 8 | AVGDEMAND | Average Demand | 0.00145 | 0.00390 |
| 11 | 9 | ENERGY | Energy - kWh at Generation (used for Base Fuel Items) | 0.00120 | 0.00323 |
| 12 | 10 | ENERGY3 | ANNUAL KWH SALES @ METER (excl 36B) | 0.00118 | 0.00318 |
| 13 | 11 | ENERGY4 | Energy - kWh at Meter (Non-renewable only) | 0.00136 | 0.00367 |
| 14 | 12 | FUELREV | Current Fuel Revenues | 0.00122 | 0.00330 |
| 15 | 13 | REV | Current Non Fuel Revenues | 0.00267 | 0.00607 |
| 16 | 14 | CUST371 | Installation on Customer Premises - Direct Assignment | 1.00000 | - |
| 17 | 15 | CUST373 | Street Lighting and Signal Systems - Direct Assignment | - | 1.00000 |
| 18 | 16 | CUST_DEP | Customer Deposits | - | - |
| 19 | 17 | NFREV | Non-Fuel Revenues | 0.00267 | 0.00607 |
| 20 | 18 | ST_LIGHTS | Streetlight Energy - kWh at generation | 0.27031 | 0.72969 |
| 21 | 19 | CUST902 | 902-Meter Reading Expenses | - | - |
| 22 | 20 | CUST903 | 903-Customer Records and Collection Expenses | - | - |
| 23 | 21 | _EXP904 | Uncollectible Percentages | - | - |
| 24 | 22 | WTD_SERV | Customer Weighted Service Costs | - | - |
| 25 | 23 | WTD_METE | Customer Weighted Meter Costs | - | - |
| 26 | 24 | CUSTS | Annual Number of Customers | - | - |
| 27 | 25 | CUSTEXP | Weighted Customer/Energy Allocator | 0.00027 | 0.00073 |
| 28 | 26 | 36B_Dedicated | Dedicated 36B Allocator | 1.00000 | - |
| 29 | 27 | STORAGE_3S1W | 3S1W Demand at Storage Dispatch Peak Hours Transmission | - | - |
| 30 | | | | | |
| 31 | | **DEPENDENT ALLOCATORS** | | | |
| 32 | 19 | NP_PRO_DTOT | Net Plant with GI - Production-Demand | 0.00037 | 0.00100 |
| 33 | 20 | NP_PRO_EFTOT | Net Plant with GI - Production-Energy-Fuel | - | - |
| 34 | 21 | NP_PRO_ENFTOT | Net Plant with GI - Production-Energy-Non-Fuel | - | - |
| 35 | 22 | NP_STO_PRO_DTOT | Net Plant with GI - Storage-Production-Demand | 0.00037 | 0.00100 |
| 36 | 23 | NP_STO_TRA_DTOT | Net Plant with GI - Storage-Transmission-Demand | 0.00088 | 0.00232 |
| 37 | 24 | NP_STO_DIS_DSUBTOT | Net Plant with GI - Storage-Distribution-Demand-Subs | 0.00183 | 0.00627 |
| 38 | 25 | NP_STO_DIS_DPRITOT | Net Plant with GI - Storage-Distribution-Demand-Primary | 0.00193 | 0.00660 |

This schedule is sponsored by PNM Witness Larkin

**PUBLIC SERVICE OF NEW MEXICO**
**Base Period Ending June 30th, 2026**

| Line No. | Factor No. | Class_Factors | | dule 20-Customer O |
|---|---|---|---|---|
| | | | | Streetlighting |
| | | | | 21 |
| 1 | | | | |
| 2 | | **INDEPENDENT ALLOCATORS** | | |
| 3 | 1 | RH_DEMAND | Risk Hour Demand | - |
| 4 | 2 | TRANS_12CP | Transmission Demand (based on 12CP) | - |
| 5 | 3 | NCP | Max Non Coincident Peak | - |
| 6 | 4 | NCP_SUBS | Max Non Coincident Peak - Substation Level | - |
| 7 | 5 | NCP_PRI | Max Non Coincident Peak - Primary Level | - |
| 8 | 6 | NCP_SEC | Max Non Coincident Peak - Secondary Level | - |
| 9 | 7 | STORAGE_3S1W | 3S1W Demand at Storage Dispatch Peak Hours | - |
| 10 | 8 | AVGDEMAND | Average Demand | - |
| 11 | 9 | ENERGY | Energy - kWh at Generation (used for Base Fuel Items) | - |
| 12 | 10 | ENERGY3 | ANNUAL KWH SALES @ METER (excl 36B) | - |
| 13 | 11 | ENERGY4 | Energy - kWh at Meter (Non-renewable only) | - |
| 14 | 12 | FUELREV | Current Fuel Revenues | - |
| 15 | 13 | REV | Current Non Fuel Revenues | - |
| 16 | 14 | CUST371 | Installation on Customer Premises - Direct Assignment | - |
| 17 | 15 | CUST373 | Street Lighting and Signal Systems - Direct Assignment | - |
| 18 | 16 | CUST_DEP | Customer Deposits | - |
| 19 | 17 | NFREV | Non-Fuel Revenues | - |
| 20 | 18 | ST_LIGHTS | Streetlight Energy - kWh at generation | - |
| 21 | 19 | CUST902 | 902-Meter Reading Expenses | - |
| 22 | 20 | CUST903 | 903-Customer Records and Collection Expenses | - |
| 23 | 21 | _EXP904 | Uncollectible Percentages | - |
| 24 | 22 | WTD_SERV | Customer Weighted Service Costs | - |
| 25 | 23 | WTD_METE | Customer Weighted Meter Costs | - |
| 26 | 24 | CUSTS | Annual Number of Customers | - |
| 27 | 25 | CUSTEXP | Weighted Customer/Energy Allocator | - |
| 28 | 26 | 36B_Dedicated | Dedicated 36B Allocator | - |
| 29 | 27 | STORAGE_3S1W | 3S1W Demand at Storage Dispatch Peak Hours Transmission | - |
| 30 | | | | |
| 31 | | **DEPENDENT ALLOCATORS** | | |
| 32 | 19 | NP_PRO_DTOT | Net Plant with GI - Production-Demand | 0.00000 |
| 33 | 20 | NP_PRO_EFTOT | Net Plant with GI - Production-Energy-Fuel | - |
| 34 | 21 | NP_PRO_ENFTOT | Net Plant with GI - Production-Energy-Non-Fuel | - |
| 35 | 22 | NP_STO_PRO_DTOT | Net Plant with GI - Storage-Production-Demand | - |
| 36 | 23 | NP_STO_TRA_DTOT | Net Plant with GI - Storage-Transmission-Demand | - |
| 37 | 24 | NP_STO_DIS_DSUBTOT | Net Plant with GI - Storage-Distribution-Demand-Subs | - |
| 38 | 25 | NP_STO_DIS_DPRITOT | Net Plant with GI - Storage-Distribution-Demand-Primary | - |

This schedule is sponsored by PNM Witness Larkin

**PUBLIC SERVICE OF NEW MEXICO**
**Base Period Ending June 30th, 2026**

| Line No. | Class_Factors Factor No. | | | Other Input |
|---|---|---|---|---|
| 39 | 26 | NP_STO_DIS_DSECTOT | Net Plant with GI - Storage-Distribution-Demand-Secondary | |
| 40 | 27 | NP_TRA_DTOT | Net Plant with GI - Transmission-Demand | |
| 41 | 28 | NP_DIS_DSUBTOT | Net Plant with GI - Distribution-Demand-Subs | |
| 42 | 29 | NP_DIS_DPRITOT | Net Plant with GI - Distribution-Demand-Primary | |
| 43 | 30 | NP_DIS_DSECTOT | Net Plant with GI - Distribution-Demand-Secondary | |
| 44 | 31 | NP_DIS_CSRVTOT | Net Plant with GI - Distribution-Customer-Services | |
| 45 | 32 | NP_DIS_CMTRTOT | Net Plant with GI - Distribution-Customer-Meters | |
| 46 | 33 | NP_DIS_CMTRRTOT | Net Plant with GI - Distribution-Customer-Meter Reading | |
| 47 | 34 | NP_DIS_CBILTOT | Net Plant with GI - Distribution-Customer-Billing & Collections | |
| 48 | 35 | NP_DIS_CINFTOT | Net Plant with GI - Distribution-Customer-Service & Info | |
| 49 | 36 | NP_DIS_COTHTOT | Net Plant with GI - Distribution-Customer-Other | |
| 50 | 37 | NP_PRO_D_GI | Net GI Plant - Production-Demand | |
| 51 | 38 | NP_PRO_EF_GI | Net GI Plant - Production-Energy-Fuel | |
| 52 | 39 | NP_PRO_ENF_GI | Net GI Plant - Production-Energy-Non-Fuel | |
| 53 | 40 | NP_STO_PRO_D_GI | Net GI Plant - Storage-Production-Demand | |
| 54 | 41 | NP_STO_TRA_D_GI | Net GI Plant - Storage-Transmission-Demand | |
| 55 | 42 | NP_STO_DIS_DSUB_GI | Net GI Plant - Storage-Distribution-Demand-Subs | |
| 56 | 43 | NP_STO_DIS_DPRI_GI | Net GI Plant - Storage-Distribution-Demand-Primary | |
| 57 | 44 | NP_STO_DIS_DSEC_GI | Net GI Plant - Storage-Distribution-Demand-Secondary | |
| 58 | 45 | NP_TRA_D_GI | Net GI Plant - Transmission-Demand | |
| 59 | 46 | NP_DIS_DSUB_GI | Net GI Plant - Distribution-Demand-Subs | |
| 60 | 47 | NP_DIS_DPRI_GI | Net GI Plant - Distribution-Demand-Primary | |
| 61 | 48 | NP_DIS_DSEC_GI | Net GI Plant - Distribution-Demand-Secondary | |
| 62 | 49 | NP_DIS_CSRV_GI | Net GI Plant - Distribution-Customer-Services | |
| 63 | 50 | NP_DIS_CMTR_GI | Net GI Plant - Distribution-Customer-Meters | |
| 64 | 51 | NP_DIS_CMTRR_GI | Net GI Plant - Distribution-Customer-Meter Reading | |
| 65 | 52 | NP_DIS_CBIL_GI | Net GI Plant - Distribution-Customer-Billing & Collections | |
| 66 | 53 | NP_DIS_CINF_GI | Net GI Plant - Distribution-Customer-Service & Info | |
| 67 | 54 | NP_DIS_COTH_GI | Net GI Plant - Distribution-Customer-Other | |
| 68 | 55 | NP_DIS_SVCSMTRS | Net Plant - Distribution-Customer-Services and Meters | |
| 69 | 56 | 5819_PROD | Accts 581-589 - Production-Demand | |
| 70 | 57 | 5819_PROEF | Accts 581-589 - Production-Energy-Fuel | |
| 71 | 58 | 5819_PROENF | Accts 581-589 - Production-Energy-Non-Fuel | |
| 72 | 59 | 5819_STO_PRO_D | Accts 581-589 - Storage-Production-Demand | |
| 73 | 60 | 5819_STO_TRA_D | Accts 581-589 - Storage-Transmission-Demand | |
| 74 | 61 | 5819_STO_DIS_DSUB | Accts 581-589 - Storage-Distribution-Demand-Subs | |
| 75 | 62 | 5819_STO_DIS_DPRI | Accts 581-589 - Storage-Distribution-Demand-Primary | |

**PUBLIC SERVICE OF NEW MEXICO**
**Base Period Ending June 30th, 2026**

| Class_Factors Line No. | Factor No. | | | Schedule 1 PNM Retail | Residential |
|---|---|---|---|---|---|
| 39 | 26 | NP_STO_DIS_DSECTOT | Net Plant with GI - Storage-Distribution-Demand-Secondary | - | - |
| 40 | 27 | NP_TRA_DTOT | Net Plant with GI - Transmission-Demand | 1.00000 | 0.43201 |
| 41 | 28 | NP_DIS_DSUBTOT | Net Plant with GI - Distribution-Demand-Subs | 1.00000 | 0.51204 |
| 42 | 29 | NP_DIS_DPRITOT | Net Plant with GI - Distribution-Demand-Primary | 1.00000 | 0.53913 |
| 43 | 30 | NP_DIS_DSECTOT | Net Plant with GI - Distribution-Demand-Secondary | 1.00000 | 0.59629 |
| 44 | 31 | NP_DIS_CSRVTOT | Net Plant with GI - Distribution-Customer-Services | 1.00000 | 0.91430 |
| 45 | 32 | NP_DIS_CMTRTOT | Net Plant with GI - Distribution-Customer-Meters | 1.00000 | 0.64381 |
| 46 | 33 | NP_DIS_CMTRRTOT | Net Plant with GI - Distribution-Customer-Meter Reading | 1.00000 | 0.89424 |
| 47 | 34 | NP_DIS_CBILTOT | Net Plant with GI - Distribution-Customer-Billing & Collections | 1.00000 | 0.89424 |
| 48 | 35 | NP_DIS_CINFTOT | Net Plant with GI - Distribution-Customer-Service & Info | - | - |
| 49 | 36 | NP_DIS_COTHTOT | Net Plant with GI - Distribution-Customer-Other | 1.00000 | 0.41328 |
| 50 | 37 | NP_PRO_D_GI | Net GI Plant - Production-Demand | 1.00000 | 0.50393 |
| 51 | 38 | NP_PRO_EF_GI | Net GI Plant - Production-Energy-Fuel | - | - |
| 52 | 39 | NP_PRO_ENF_GI | Net GI Plant - Production-Energy-Non-Fuel | - | - |
| 53 | 40 | NP_STO_PRO_D_GI | Net GI Plant - Storage-Production-Demand | - | - |
| 54 | 41 | NP_STO_TRA_D_GI | Net GI Plant - Storage-Transmission-Demand | - | - |
| 55 | 42 | NP_STO_DIS_DSUB_GI | Net GI Plant - Storage-Distribution-Demand-Subs | - | - |
| 56 | 43 | NP_STO_DIS_DPRI_GI | Net GI Plant - Storage-Distribution-Demand-Primary | - | - |
| 57 | 44 | NP_STO_DIS_DSEC_GI | Net GI Plant - Storage-Distribution-Demand-Secondary | - | - |
| 58 | 45 | NP_TRA_D_GI | Net GI Plant - Transmission-Demand | 1.00000 | 0.43201 |
| 59 | 46 | NP_DIS_DSUB_GI | Net GI Plant - Distribution-Demand-Subs | 1.00000 | 0.51204 |
| 60 | 47 | NP_DIS_DPRI_GI | Net GI Plant - Distribution-Demand-Primary | 1.00000 | 0.53913 |
| 61 | 48 | NP_DIS_DSEC_GI | Net GI Plant - Distribution-Demand-Secondary | 1.00000 | 0.59629 |
| 62 | 49 | NP_DIS_CSRV_GI | Net GI Plant - Distribution-Customer-Services | 1.00000 | 0.91430 |
| 63 | 50 | NP_DIS_CMTR_GI | Net GI Plant - Distribution-Customer-Meters | 1.00000 | 0.64381 |
| 64 | 51 | NP_DIS_CMTRR_GI | Net GI Plant - Distribution-Customer-Meter Reading | 1.00000 | 0.89424 |
| 65 | 52 | NP_DIS_CBIL_GI | Net GI Plant - Distribution-Customer-Billing & Collections | 1.00000 | 0.89424 |
| 66 | 53 | NP_DIS_CINF_GI | Net GI Plant - Distribution-Customer-Service & Info | - | - |
| 67 | 54 | NP_DIS_COTH_GI | Net GI Plant - Distribution-Customer-Other | 1.00000 | 0.77295 |
| 68 | 55 | NP_DIS_SVCSMTRS | Net Plant - Distribution-Customer-Services and Meters | - | - |
| 69 | 56 | 5819_PROD | Accts 581-589 - Production-Demand | - | - |
| 70 | 57 | 5819_PROEF | Accts 581-589 - Production-Energy-Fuel | - | - |
| 71 | 58 | 5819_PROENF | Accts 581-589 - Production-Energy-Non-Fuel | - | - |
| 72 | 59 | 5819_STO_PRO_D | Accts 581-589 - Storage-Production-Demand | - | - |
| 73 | 60 | 5819_STO_TRA_D | Accts 581-589 - Storage-Transmission-Demand | - | - |
| 74 | 61 | 5819_STO_DIS_DSUB | Accts 581-589 - Storage-Distribution-Demand-Subs | - | - |
| 75 | 62 | 5819_STO_DIS_DPRI | Accts 581-589 - Storage-Distribution-Demand-Primary | - | - |

**PUBLIC SERVICE OF NEW MEXICO**
**Base Period Ending June 30th, 2026**

| Class_Factors Line No. | Factor No. | | | Schedule 1B Residential | Schedule 2 Small Power |
|---|---|---|---|---|---|
| 39 | 26 | NP_STO_DIS_DSECTOT | Net Plant with GI - Storage-Distribution-Demand-Secondary | - | - |
| 40 | 27 | NP_TRA_DTOT | Net Plant with GI - Transmission-Demand | 0.00000 | 0.09969 |
| 41 | 28 | NP_DIS_DSUBTOT | Net Plant with GI - Distribution-Demand-Subs | 0.00000 | 0.12370 |
| 42 | 29 | NP_DIS_DPRITOT | Net Plant with GI - Distribution-Demand-Primary | 0.00000 | 0.13024 |
| 43 | 30 | NP_DIS_DSECTOT | Net Plant with GI - Distribution-Demand-Secondary | 0.00000 | 0.14405 |
| 44 | 31 | NP_DIS_CSRVTOT | Net Plant with GI - Distribution-Customer-Services | 0.00000 | 0.08570 |
| 45 | 32 | NP_DIS_CMTRTOT | Net Plant with GI - Distribution-Customer-Meters | 0.00000 | 0.20874 |
| 46 | 33 | NP_DIS_CMTRRTOT | Net Plant with GI - Distribution-Customer-Meter Reading | - | 0.09685 |
| 47 | 34 | NP_DIS_CBILTOT | Net Plant with GI - Distribution-Customer-Billing & Collections | - | 0.09685 |
| 48 | 35 | NP_DIS_CINFTOT | Net Plant with GI - Distribution-Customer-Service & Info | - | - |
| 49 | 36 | NP_DIS_COTHTOT | Net Plant with GI - Distribution-Customer-Other | 0.00000 | 0.05229 |
| 50 | 37 | NP_PRO_D_GI | Net GI Plant - Production-Demand | 0.00000 | 0.11338 |
| 51 | 38 | NP_PRO_EF_GI | Net GI Plant - Production-Energy-Fuel | - | - |
| 52 | 39 | NP_PRO_ENF_GI | Net GI Plant - Production-Energy-Non-Fuel | - | - |
| 53 | 40 | NP_STO_PRO_D_GI | Net GI Plant - Storage-Production-Demand | - | - |
| 54 | 41 | NP_STO_TRA_D_GI | Net GI Plant - Storage-Transmission-Demand | - | - |
| 55 | 42 | NP_STO_DIS_DSUB_GI | Net GI Plant - Storage-Distribution-Demand-Subs | - | - |
| 56 | 43 | NP_STO_DIS_DPRI_GI | Net GI Plant - Storage-Distribution-Demand-Primary | - | - |
| 57 | 44 | NP_STO_DIS_DSEC_GI | Net GI Plant - Storage-Distribution-Demand-Secondary | - | - |
| 58 | 45 | NP_TRA_D_GI | Net GI Plant - Transmission-Demand | 0.00000 | 0.09969 |
| 59 | 46 | NP_DIS_DSUB_GI | Net GI Plant - Distribution-Demand-Subs | 0.00000 | 0.12370 |
| 60 | 47 | NP_DIS_DPRI_GI | Net GI Plant - Distribution-Demand-Primary | 0.00000 | 0.13024 |
| 61 | 48 | NP_DIS_DSEC_GI | Net GI Plant - Distribution-Demand-Secondary | 0.00000 | 0.14405 |
| 62 | 49 | NP_DIS_CSRV_GI | Net GI Plant - Distribution-Customer-Services | 0.00000 | 0.08570 |
| 63 | 50 | NP_DIS_CMTR_GI | Net GI Plant - Distribution-Customer-Meters | 0.00000 | 0.20874 |
| 64 | 51 | NP_DIS_CMTRR_GI | Net GI Plant - Distribution-Customer-Meter Reading | - | 0.09685 |
| 65 | 52 | NP_DIS_CBIL_GI | Net GI Plant - Distribution-Customer-Billing & Collections | - | 0.09685 |
| 66 | 53 | NP_DIS_CINF_GI | Net GI Plant - Distribution-Customer-Service & Info | - | - |
| 67 | 54 | NP_DIS_COTH_GI | Net GI Plant - Distribution-Customer-Other | 0.00000 | 0.09779 |
| 68 | 55 | NP_DIS_SVCSMTRS | Net Plant - Distribution-Customer-Services and Meters | - | - |
| 69 | 56 | 5819_PROD | Accts 581-589 - Production-Demand | - | - |
| 70 | 57 | 5819_PROEF | Accts 581-589 - Production-Energy-Fuel | - | - |
| 71 | 58 | 5819_PROENF | Accts 581-589 - Production-Energy-Non-Fuel | - | - |
| 72 | 59 | 5819_STO_PRO_D | Accts 581-589 - Storage-Production-Demand | - | - |
| 73 | 60 | 5819_STO_TRA_D | Accts 581-589 - Storage-Transmission-Demand | - | - |
| 74 | 61 | 5819_STO_DIS_DSUB | Accts 581-589 - Storage-Distribution-Demand-Subs | - | - |
| 75 | 62 | 5819_STO_DIS_DPRI | Accts 581-589 - Storage-Distribution-Demand-Primary | - | - |

**PUBLIC SERVICE OF NEW MEXICO**
**Base Period Ending June 30th, 2026**

| Class_Factors Line No. | Factor No. | | | Schedule 2B Small Power | Schedule 3B General Power |
|---|---|---|---|---|---|
| 39 | 26 | NP_STO_DIS_DSECTOT | Net Plant with GI - Storage-Distribution-Demand-Secondary | - | - |
| 40 | 27 | NP_TRA_DTOT | Net Plant with GI - Transmission-Demand | 0.00000 | 0.14784 |
| 41 | 28 | NP_DIS_DSUBTOT | Net Plant with GI - Distribution-Demand-Subs | 0.00000 | 0.14987 |
| 42 | 29 | NP_DIS_DPRITOT | Net Plant with GI - Distribution-Demand-Primary | 0.00000 | 0.15780 |
| 43 | 30 | NP_DIS_DSECTOT | Net Plant with GI - Distribution-Demand-Secondary | 0.00000 | 0.17453 |
| 44 | 31 | NP_DIS_CSRVTOT | Net Plant with GI - Distribution-Customer-Services | 0.00000 | - |
| 45 | 32 | NP_DIS_CMTRTOT | Net Plant with GI - Distribution-Customer-Meters | 0.00000 | 0.06274 |
| 46 | 33 | NP_DIS_CMTRRTOT | Net Plant with GI - Distribution-Customer-Meter Reading | - | 0.00502 |
| 47 | 34 | NP_DIS_CBILTOT | Net Plant with GI - Distribution-Customer-Billing & Collections | - | 0.00502 |
| 48 | 35 | NP_DIS_CINFTOT | Net Plant with GI - Distribution-Customer-Service & Info | - | - |
| 49 | 36 | NP_DIS_COTHTOT | Net Plant with GI - Distribution-Customer-Other | 0.00000 | 0.01946 |
| 50 | 37 | NP_PRO_D_GI | Net GI Plant - Production-Demand | 0.00000 | 0.16519 |
| 51 | 38 | NP_PRO_EF_GI | Net GI Plant - Production-Energy-Fuel | - | - |
| 52 | 39 | NP_PRO_ENF_GI | Net GI Plant - Production-Energy-Non-Fuel | - | - |
| 53 | 40 | NP_STO_PRO_D_GI | Net GI Plant - Storage-Production-Demand | - | - |
| 54 | 41 | NP_STO_TRA_D_GI | Net GI Plant - Storage-Transmission-Demand | - | - |
| 55 | 42 | NP_STO_DIS_DSUB_GI | Net GI Plant - Storage-Distribution-Demand-Subs | - | - |
| 56 | 43 | NP_STO_DIS_DPRI_GI | Net GI Plant - Storage-Distribution-Demand-Primary | - | - |
| 57 | 44 | NP_STO_DIS_DSEC_GI | Net GI Plant - Storage-Distribution-Demand-Secondary | - | - |
| 58 | 45 | NP_TRA_D_GI | Net GI Plant - Transmission-Demand | 0.00000 | 0.14784 |
| 59 | 46 | NP_DIS_DSUB_GI | Net GI Plant - Distribution-Demand-Subs | 0.00000 | 0.14987 |
| 60 | 47 | NP_DIS_DPRI_GI | Net GI Plant - Distribution-Demand-Primary | 0.00000 | 0.15780 |
| 61 | 48 | NP_DIS_DSEC_GI | Net GI Plant - Distribution-Demand-Secondary | 0.00000 | 0.17453 |
| 62 | 49 | NP_DIS_CSRV_GI | Net GI Plant - Distribution-Customer-Services | 0.00000 | - |
| 63 | 50 | NP_DIS_CMTR_GI | Net GI Plant - Distribution-Customer-Meters | 0.00000 | 0.06274 |
| 64 | 51 | NP_DIS_CMTRR_GI | Net GI Plant - Distribution-Customer-Meter Reading | - | 0.00502 |
| 65 | 52 | NP_DIS_CBIL_GI | Net GI Plant - Distribution-Customer-Billing & Collections | - | 0.00502 |
| 66 | 53 | NP_DIS_CINF_GI | Net GI Plant - Distribution-Customer-Service & Info | - | - |
| 67 | 54 | NP_DIS_COTH_GI | Net GI Plant - Distribution-Customer-Other | 0.00000 | 0.03639 |
| 68 | 55 | NP_DIS_SVCSMTRS | Net Plant - Distribution-Customer-Services and Meters | - | - |
| 69 | 56 | 5819_PROD | Accts 581-589 - Production-Demand | - | - |
| 70 | 57 | 5819_PROEF | Accts 581-589 - Production-Energy-Fuel | - | - |
| 71 | 58 | 5819_PROENF | Accts 581-589 - Production-Energy-Non-Fuel | - | - |
| 72 | 59 | 5819_STO_PRO_D | Accts 581-589 - Storage-Production-Demand | - | - |
| 73 | 60 | 5819_STO_TRA_D | Accts 581-589 - Storage-Transmission-Demand | - | - |
| 74 | 61 | 5819_STO_DIS_DSUB | Accts 581-589 - Storage-Distribution-Demand-Subs | - | - |
| 75 | 62 | 5819_STO_DIS_DPRI | Accts 581-589 - Storage-Distribution-Demand-Primary | - | - |

This schedule is sponsored by PNM Witness Larkin

**PUBLIC SERVICE OF NEW MEXICO**
**Base Period Ending June 30th, 2026**

| Class_Factors Line No. | Factor No. | | | Schedule 3C GP Low LF | Schedule 3D General Power Gov |
|---|---|---|---|---|---|
| 39 | 26 | NP_STO_DIS_DSECTOT | Net Plant with GI - Storage-Distribution-Demand-Secondary | - | - |
| 40 | 27 | NP_TRA_DTOT | Net Plant with GI - Transmission-Demand | 0.02995 | 0.01015 |
| 41 | 28 | NP_DIS_DSUBTOT | Net Plant with GI - Distribution-Demand-Subs | 0.04594 | 0.01006 |
| 42 | 29 | NP_DIS_DPRITOT | Net Plant with GI - Distribution-Demand-Primary | 0.04837 | 0.01060 |
| 43 | 30 | NP_DIS_DSECTOT | Net Plant with GI - Distribution-Demand-Secondary | 0.05349 | 0.01172 |
| 44 | 31 | NP_DIS_CSRVTOT | Net Plant with GI - Distribution-Customer-Services | - | - |
| 45 | 32 | NP_DIS_CMTRTOT | Net Plant with GI - Distribution-Customer-Meters | 0.02751 | 0.00388 |
| 46 | 33 | NP_DIS_CMTRRTOT | Net Plant with GI - Distribution-Customer-Meter Reading | 0.00220 | 0.00031 |
| 47 | 34 | NP_DIS_CBILTOT | Net Plant with GI - Distribution-Customer-Billing & Collections | 0.00220 | 0.00031 |
| 48 | 35 | NP_DIS_CINFTOT | Net Plant with GI - Distribution-Customer-Service & Info | - | - |
| 49 | 36 | NP_DIS_COTHTOT | Net Plant with GI - Distribution-Customer-Other | 0.00485 | 0.00137 |
| 50 | 37 | NP_PRO_D_GI | Net GI Plant - Production-Demand | 0.03486 | 0.01121 |
| 51 | 38 | NP_PRO_EF_GI | Net GI Plant - Production-Energy-Fuel | - | - |
| 52 | 39 | NP_PRO_ENF_GI | Net GI Plant - Production-Energy-Non-Fuel | - | - |
| 53 | 40 | NP_STO_PRO_D_GI | Net GI Plant - Storage-Production-Demand | - | - |
| 54 | 41 | NP_STO_TRA_D_GI | Net GI Plant - Storage-Transmission-Demand | - | - |
| 55 | 42 | NP_STO_DIS_DSUB_GI | Net GI Plant - Storage-Distribution-Demand-Subs | - | - |
| 56 | 43 | NP_STO_DIS_DPRI_GI | Net GI Plant - Storage-Distribution-Demand-Primary | - | - |
| 57 | 44 | NP_STO_DIS_DSEC_GI | Net GI Plant - Storage-Distribution-Demand-Secondary | - | - |
| 58 | 45 | NP_TRA_D_GI | Net GI Plant - Transmission-Demand | 0.02995 | 0.01015 |
| 59 | 46 | NP_DIS_DSUB_GI | Net GI Plant - Distribution-Demand-Subs | 0.04594 | 0.01006 |
| 60 | 47 | NP_DIS_DPRI_GI | Net GI Plant - Distribution-Demand-Primary | 0.04837 | 0.01060 |
| 61 | 48 | NP_DIS_DSEC_GI | Net GI Plant - Distribution-Demand-Secondary | 0.05349 | 0.01172 |
| 62 | 49 | NP_DIS_CSRV_GI | Net GI Plant - Distribution-Customer-Services | - | - |
| 63 | 50 | NP_DIS_CMTR_GI | Net GI Plant - Distribution-Customer-Meters | 0.02751 | 0.00388 |
| 64 | 51 | NP_DIS_CMTRR_GI | Net GI Plant - Distribution-Customer-Meter Reading | 0.00220 | 0.00031 |
| 65 | 52 | NP_DIS_CBIL_GI | Net GI Plant - Distribution-Customer-Billing & Collections | 0.00220 | 0.00031 |
| 66 | 53 | NP_DIS_CINF_GI | Net GI Plant - Distribution-Customer-Service & Info | - | - |
| 67 | 54 | NP_DIS_COTH_GI | Net GI Plant - Distribution-Customer-Other | 0.00908 | 0.00257 |
| 68 | 55 | NP_DIS_SVCSMTRS | Net Plant - Distribution-Customer-Services and Meters | - | - |
| 69 | 56 | 5819_PROD | Accts 581-589 - Production-Demand | - | - |
| 70 | 57 | 5819_PROEF | Accts 581-589 - Production-Energy-Fuel | - | - |
| 71 | 58 | 5819_PROENF | Accts 581-589 - Production-Energy-Non-Fuel | - | - |
| 72 | 59 | 5819_STO_PRO_D | Accts 581-589 - Storage-Production-Demand | - | - |
| 73 | 60 | 5819_STO_TRA_D | Accts 581-589 - Storage-Transmission-Demand | - | - |
| 74 | 61 | 5819_STO_DIS_DSUB | Accts 581-589 - Storage-Distribution-Demand-Subs | - | - |
| 75 | 62 | 5819_STO_DIS_DPRI | Accts 581-589 - Storage-Distribution-Demand-Primary | - | - |

**PUBLIC SERVICE OF NEW MEXICO**
**Base Period Ending June 30th, 2026**

| Class_Factors Line No. | Factor No. | | | Schedule 3E GP Low LF Gov |
|---|---|---|---|---|
| 39 | 26 | NP_STO_DIS_DSECTOT | Net Plant with GI - Storage-Distribution-Demand-Secondary | - |
| 40 | 27 | NP_TRA_DTOT | Net Plant with GI - Transmission-Demand | 0.00241 |
| 41 | 28 | NP_DIS_DSUBTOT | Net Plant with GI - Distribution-Demand-Subs | 0.00412 |
| 42 | 29 | NP_DIS_DPRITOT | Net Plant with GI - Distribution-Demand-Primary | 0.00434 |
| 43 | 30 | NP_DIS_DSECTOT | Net Plant with GI - Distribution-Demand-Secondary | 0.00480 |
| 44 | 31 | NP_DIS_CSRVTOT | Net Plant with GI - Distribution-Customer-Services | - |
| 45 | 32 | NP_DIS_CMTRTOT | Net Plant with GI - Distribution-Customer-Meters | 0.00161 |
| 46 | 33 | NP_DIS_CMTRRTOT | Net Plant with GI - Distribution-Customer-Meter Reading | 0.00013 |
| 47 | 34 | NP_DIS_CBILTOT | Net Plant with GI - Distribution-Customer-Billing & Collections | 0.00013 |
| 48 | 35 | NP_DIS_CINFTOT | Net Plant with GI - Distribution-Customer-Service & Info | - |
| 49 | 36 | NP_DIS_COTHTOT | Net Plant with GI - Distribution-Customer-Other | 0.00035 |
| 50 | 37 | NP_PRO_D_GI | Net GI Plant - Production-Demand | 0.00287 |
| 51 | 38 | NP_PRO_EF_GI | Net GI Plant - Production-Energy-Fuel | - |
| 52 | 39 | NP_PRO_ENF_GI | Net GI Plant - Production-Energy-Non-Fuel | - |
| 53 | 40 | NP_STO_PRO_D_GI | Net GI Plant - Storage-Production-Demand | - |
| 54 | 41 | NP_STO_TRA_D_GI | Net GI Plant - Storage-Transmission-Demand | - |
| 55 | 42 | NP_STO_DIS_DSUB_GI | Net GI Plant - Storage-Distribution-Demand-Subs | - |
| 56 | 43 | NP_STO_DIS_DPRI_GI | Net GI Plant - Storage-Distribution-Demand-Primary | - |
| 57 | 44 | NP_STO_DIS_DSEC_GI | Net GI Plant - Storage-Distribution-Demand-Secondary | - |
| 58 | 45 | NP_TRA_D_GI | Net GI Plant - Transmission-Demand | 0.00241 |
| 59 | 46 | NP_DIS_DSUB_GI | Net GI Plant - Distribution-Demand-Subs | 0.00412 |
| 60 | 47 | NP_DIS_DPRI_GI | Net GI Plant - Distribution-Demand-Primary | 0.00434 |
| 61 | 48 | NP_DIS_DSEC_GI | Net GI Plant - Distribution-Demand-Secondary | 0.00480 |
| 62 | 49 | NP_DIS_CSRV_GI | Net GI Plant - Distribution-Customer-Services | - |
| 63 | 50 | NP_DIS_CMTR_GI | Net GI Plant - Distribution-Customer-Meters | 0.00161 |
| 64 | 51 | NP_DIS_CMTRR_GI | Net GI Plant - Distribution-Customer-Meter Reading | 0.00013 |
| 65 | 52 | NP_DIS_CBIL_GI | Net GI Plant - Distribution-Customer-Billing & Collections | 0.00013 |
| 66 | 53 | NP_DIS_CINF_GI | Net GI Plant - Distribution-Customer-Service & Info | - |
| 67 | 54 | NP_DIS_COTH_GI | Net GI Plant - Distribution-Customer-Other | 0.00065 |
| 68 | 55 | NP_DIS_SVCSMTRS | Net Plant - Distribution-Customer-Services and Meters | - |
| 69 | 56 | 5819_PROD | Accts 581-589 - Production-Demand | - |
| 70 | 57 | 5819_PROEF | Accts 581-589 - Production-Energy-Fuel | - |
| 71 | 58 | 5819_PROENF | Accts 581-589 - Production-Energy-Non-Fuel | - |
| 72 | 59 | 5819_STO_PRO_D | Accts 581-589 - Storage-Production-Demand | - |
| 73 | 60 | 5819_STO_TRA_D | Accts 581-589 - Storage-Transmission-Demand | - |
| 74 | 61 | 5819_STO_DIS_DSUB | Accts 581-589 - Storage-Distribution-Demand-Subs | - |
| 75 | 62 | 5819_STO_DIS_DPRI | Accts 581-589 - Storage-Distribution-Demand-Primary | - |

This schedule is sponsored by PNM Witness Larkin

**PUBLIC SERVICE OF NEW MEXICO**
**Base Period Ending June 30th, 2026**

| Class_Factors Line No. | Factor No. | | | Schedule 3F GP Charging Stations | Schedule 4 Large Power |
|---|---|---|---|---|---|
| 39 | 26 | NP_STO_DIS_DSECTOT | Net Plant with GI - Storage-Distribution-Demand-Secondary | - | - |
| 40 | 27 | NP_TRA_DTOT | Net Plant with GI - Transmission-Demand | 0.00054 | 0.07353 |
| 41 | 28 | NP_DIS_DSUBTOT | Net Plant with GI - Distribution-Demand-Subs | 0.00174 | 0.06821 |
| 42 | 29 | NP_DIS_DPRITOT | Net Plant with GI - Distribution-Demand-Primary | 0.00184 | 0.07182 |
| 43 | 30 | NP_DIS_DSECTOT | Net Plant with GI - Distribution-Demand-Secondary | 0.00203 | - |
| 44 | 31 | NP_DIS_CSRVTOT | Net Plant with GI - Distribution-Customer-Services | - | - |
| 45 | 32 | NP_DIS_CMTRTOT | Net Plant with GI - Distribution-Customer-Meters | 0.00036 | 0.02084 |
| 46 | 33 | NP_DIS_CMTRRTOT | Net Plant with GI - Distribution-Customer-Meter Reading | 0.00003 | 0.00031 |
| 47 | 34 | NP_DIS_CBILTOT | Net Plant with GI - Distribution-Customer-Billing & Collections | 0.00003 | 0.00031 |
| 48 | 35 | NP_DIS_CINFTOT | Net Plant with GI - Distribution-Customer-Service & Info | - | - |
| 49 | 36 | NP_DIS_COTHTOT | Net Plant with GI - Distribution-Customer-Other | 0.00010 | 0.01049 |
| 50 | 37 | NP_PRO_D_GI | Net GI Plant - Production-Demand | 0.00070 | 0.08252 |
| 51 | 38 | NP_PRO_EF_GI | Net GI Plant - Production-Energy-Fuel | - | - |
| 52 | 39 | NP_PRO_ENF_GI | Net GI Plant - Production-Energy-Non-Fuel | - | - |
| 53 | 40 | NP_STO_PRO_D_GI | Net GI Plant - Storage-Production-Demand | - | - |
| 54 | 41 | NP_STO_TRA_D_GI | Net GI Plant - Storage-Transmission-Demand | - | - |
| 55 | 42 | NP_STO_DIS_DSUB_GI | Net GI Plant - Storage-Distribution-Demand-Subs | - | - |
| 56 | 43 | NP_STO_DIS_DPRI_GI | Net GI Plant - Storage-Distribution-Demand-Primary | - | - |
| 57 | 44 | NP_STO_DIS_DSEC_GI | Net GI Plant - Storage-Distribution-Demand-Secondary | - | - |
| 58 | 45 | NP_TRA_D_GI | Net GI Plant - Transmission-Demand | 0.00054 | 0.07353 |
| 59 | 46 | NP_DIS_DSUB_GI | Net GI Plant - Distribution-Demand-Subs | 0.00174 | 0.06821 |
| 60 | 47 | NP_DIS_DPRI_GI | Net GI Plant - Distribution-Demand-Primary | 0.00184 | 0.07182 |
| 61 | 48 | NP_DIS_DSEC_GI | Net GI Plant - Distribution-Demand-Secondary | 0.00203 | - |
| 62 | 49 | NP_DIS_CSRV_GI | Net GI Plant - Distribution-Customer-Services | - | - |
| 63 | 50 | NP_DIS_CMTR_GI | Net GI Plant - Distribution-Customer-Meters | 0.00036 | 0.02084 |
| 64 | 51 | NP_DIS_CMTRR_GI | Net GI Plant - Distribution-Customer-Meter Reading | 0.00003 | 0.00031 |
| 65 | 52 | NP_DIS_CBIL_GI | Net GI Plant - Distribution-Customer-Billing & Collections | 0.00003 | 0.00031 |
| 66 | 53 | NP_DIS_CINF_GI | Net GI Plant - Distribution-Customer-Service & Info | - | - |
| 67 | 54 | NP_DIS_COTH_GI | Net GI Plant - Distribution-Customer-Other | 0.00018 | 0.01962 |
| 68 | 55 | NP_DIS_SVCSMTRS | Net Plant - Distribution-Customer-Services and Meters | - | - |
| 69 | 56 | 5819_PROD | Accts 581-589 - Production-Demand | - | - |
| 70 | 57 | 5819_PROEF | Accts 581-589 - Production-Energy-Fuel | - | - |
| 71 | 58 | 5819_PROENF | Accts 581-589 - Production-Energy-Non-Fuel | - | - |
| 72 | 59 | 5819_STO_PRO_D | Accts 581-589 - Storage-Production-Demand | - | - |
| 73 | 60 | 5819_STO_TRA_D | Accts 581-589 - Storage-Transmission-Demand | - | - |
| 74 | 61 | 5819_STO_DIS_DSUB | Accts 581-589 - Storage-Distribution-Demand-Subs | - | - |
| 75 | 62 | 5819_STO_DIS_DPRI | Accts 581-589 - Storage-Distribution-Demand-Primary | - | - |

**PUBLIC SERVICE OF NEW MEXICO**
**Base Period Ending June 30th, 2026**

| Class_Factors Line No. | Factor No. | | | Schedule 5 Industrial Power | Schedule 10 Irrigation |
|---|---|---|---|---|---|
| 39 | 26 | NP_STO_DIS_DSECTOT | Net Plant with GI - Storage-Distribution-Demand-Secondary | - | - |
| 40 | 27 | NP_TRA_DTOT | Net Plant with GI - Transmission-Demand | 0.00154 | 0.00201 |
| 41 | 28 | NP_DIS_DSUBTOT | Net Plant with GI - Distribution-Demand-Subs | - | 0.00313 |
| 42 | 29 | NP_DIS_DPRITOT | Net Plant with GI - Distribution-Demand-Primary | - | 0.00330 |
| 43 | 30 | NP_DIS_DSECTOT | Net Plant with GI - Distribution-Demand-Secondary | - | 0.00365 |
| 44 | 31 | NP_DIS_CSRVTOT | Net Plant with GI - Distribution-Customer-Services | - | - |
| 45 | 32 | NP_DIS_CMTRTOT | Net Plant with GI - Distribution-Customer-Meters | 0.00012 | 0.00705 |
| 46 | 33 | NP_DIS_CMTRRTOT | Net Plant with GI - Distribution-Customer-Meter Reading | 0.00000 | 0.00056 |
| 47 | 34 | NP_DIS_CBILTOT | Net Plant with GI - Distribution-Customer-Billing & Collections | 0.00000 | 0.00056 |
| 48 | 35 | NP_DIS_CINFTOT | Net Plant with GI - Distribution-Customer-Service & Info | - | - |
| 49 | 36 | NP_DIS_COTHTOT | Net Plant with GI - Distribution-Customer-Other | 0.00015 | 0.00052 |
| 50 | 37 | NP_PRO_D_GI | Net GI Plant - Production-Demand | 0.00173 | 0.00235 |
| 51 | 38 | NP_PRO_EF_GI | Net GI Plant - Production-Energy-Fuel | - | - |
| 52 | 39 | NP_PRO_ENF_GI | Net GI Plant - Production-Energy-Non-Fuel | - | - |
| 53 | 40 | NP_STO_PRO_D_GI | Net GI Plant - Storage-Production-Demand | - | - |
| 54 | 41 | NP_STO_TRA_D_GI | Net GI Plant - Storage-Transmission-Demand | - | - |
| 55 | 42 | NP_STO_DIS_DSUB_GI | Net GI Plant - Storage-Distribution-Demand-Subs | - | - |
| 56 | 43 | NP_STO_DIS_DPRI_GI | Net GI Plant - Storage-Distribution-Demand-Primary | - | - |
| 57 | 44 | NP_STO_DIS_DSEC_GI | Net GI Plant - Storage-Distribution-Demand-Secondary | - | - |
| 58 | 45 | NP_TRA_D_GI | Net GI Plant - Transmission-Demand | 0.00154 | 0.00201 |
| 59 | 46 | NP_DIS_DSUB_GI | Net GI Plant - Distribution-Demand-Subs | - | 0.00313 |
| 60 | 47 | NP_DIS_DPRI_GI | Net GI Plant - Distribution-Demand-Primary | - | 0.00330 |
| 61 | 48 | NP_DIS_DSEC_GI | Net GI Plant - Distribution-Demand-Secondary | - | 0.00365 |
| 62 | 49 | NP_DIS_CSRV_GI | Net GI Plant - Distribution-Customer-Services | - | - |
| 63 | 50 | NP_DIS_CMTR_GI | Net GI Plant - Distribution-Customer-Meters | 0.00012 | 0.00705 |
| 64 | 51 | NP_DIS_CMTRR_GI | Net GI Plant - Distribution-Customer-Meter Reading | 0.00000 | 0.00056 |
| 65 | 52 | NP_DIS_CBIL_GI | Net GI Plant - Distribution-Customer-Billing & Collections | 0.00000 | 0.00056 |
| 66 | 53 | NP_DIS_CINF_GI | Net GI Plant - Distribution-Customer-Service & Info | - | - |
| 67 | 54 | NP_DIS_COTH_GI | Net GI Plant - Distribution-Customer-Other | 0.00027 | 0.00098 |
| 68 | 55 | NP_DIS_SVCSMTRS | Net Plant - Distribution-Customer-Services and Meters | - | - |
| 69 | 56 | 5819_PROD | Accts 581-589 - Production-Demand | - | - |
| 70 | 57 | 5819_PROEF | Accts 581-589 - Production-Energy-Fuel | - | - |
| 71 | 58 | 5819_PROENF | Accts 581-589 - Production-Energy-Non-Fuel | - | - |
| 72 | 59 | 5819_STO_PRO_D | Accts 581-589 - Storage-Production-Demand | - | - |
| 73 | 60 | 5819_STO_TRA_D | Accts 581-589 - Storage-Transmission-Demand | - | - |
| 74 | 61 | 5819_STO_DIS_DSUB | Accts 581-589 - Storage-Distribution-Demand-Subs | - | - |
| 75 | 62 | 5819_STO_DIS_DPRI | Accts 581-589 - Storage-Distribution-Demand-Primary | - | - |

**PUBLIC SERVICE OF NEW MEXICO**
**Base Period Ending June 30th, 2026**

| Class_Factors Line No. | Factor No. | | | Schedule 11 Water & Sewage | Schedule 15 Industrial Power |
|---|---|---|---|---|---|
| 39 | 26 | NP_STO_DIS_DSECTOT | Net Plant with GI - Storage-Distribution-Demand-Secondary | - | - |
| 40 | 27 | NP_TRA_DTOT | Net Plant with GI - Transmission-Demand | 0.00926 | 0.01 |
| 41 | 28 | NP_DIS_DSUBTOT | Net Plant with GI - Distribution-Demand-Subs | 0.02284 | - |
| 42 | 29 | NP_DIS_DPRITOT | Net Plant with GI - Distribution-Demand-Primary | 0.02405 | - |
| 43 | 30 | NP_DIS_DSECTOT | Net Plant with GI - Distribution-Demand-Secondary | - | - |
| 44 | 31 | NP_DIS_CSRVTOT | Net Plant with GI - Distribution-Customer-Services | - | - |
| 45 | 32 | NP_DIS_CMTRTOT | Net Plant with GI - Distribution-Customer-Meters | 0.01917 | 0.00 |
| 46 | 33 | NP_DIS_CMTRRTOT | Net Plant with GI - Distribution-Customer-Meter Reading | 0.00029 | 0.00 |
| 47 | 34 | NP_DIS_CBILTOT | Net Plant with GI - Distribution-Customer-Billing & Collections | 0.00029 | 0.00 |
| 48 | 35 | NP_DIS_CINFTOT | Net Plant with GI - Distribution-Customer-Service & Info | - | - |
| 49 | 36 | NP_DIS_COTHTOT | Net Plant with GI - Distribution-Customer-Other | 0.00223 | 0.00 |
| 50 | 37 | NP_PRO_D_GI | Net GI Plant - Production-Demand | 0.00856 | 0.01 |
| 51 | 38 | NP_PRO_EF_GI | Net GI Plant - Production-Energy-Fuel | - | - |
| 52 | 39 | NP_PRO_ENF_GI | Net GI Plant - Production-Energy-Non-Fuel | - | - |
| 53 | 40 | NP_STO_PRO_D_GI | Net GI Plant - Storage-Production-Demand | - | - |
| 54 | 41 | NP_STO_TRA_D_GI | Net GI Plant - Storage-Transmission-Demand | - | - |
| 55 | 42 | NP_STO_DIS_DSUB_GI | Net GI Plant - Storage-Distribution-Demand-Subs | - | - |
| 56 | 43 | NP_STO_DIS_DPRI_GI | Net GI Plant - Storage-Distribution-Demand-Primary | - | - |
| 57 | 44 | NP_STO_DIS_DSEC_GI | Net GI Plant - Storage-Distribution-Demand-Secondary | - | - |
| 58 | 45 | NP_TRA_D_GI | Net GI Plant - Transmission-Demand | 0.00926 | 0.01 |
| 59 | 46 | NP_DIS_DSUB_GI | Net GI Plant - Distribution-Demand-Subs | 0.02284 | - |
| 60 | 47 | NP_DIS_DPRI_GI | Net GI Plant - Distribution-Demand-Primary | 0.02405 | - |
| 61 | 48 | NP_DIS_DSEC_GI | Net GI Plant - Distribution-Demand-Secondary | - | - |
| 62 | 49 | NP_DIS_CSRV_GI | Net GI Plant - Distribution-Customer-Services | - | - |
| 63 | 50 | NP_DIS_CMTR_GI | Net GI Plant - Distribution-Customer-Meters | 0.01917 | 0.00 |
| 64 | 51 | NP_DIS_CMTRR_GI | Net GI Plant - Distribution-Customer-Meter Reading | 0.00029 | 0.00 |
| 65 | 52 | NP_DIS_CBIL_GI | Net GI Plant - Distribution-Customer-Billing & Collections | 0.00029 | 0.00 |
| 66 | 53 | NP_DIS_CINF_GI | Net GI Plant - Distribution-Customer-Service & Info | - | - |
| 67 | 54 | NP_DIS_COTH_GI | Net GI Plant - Distribution-Customer-Other | 0.00417 | 0.00 |
| 68 | 55 | NP_DIS_SVCSMTRS | Net Plant - Distribution-Customer-Services and Meters | - | - |
| 69 | 56 | 5819_PROD | Accts 581-589 - Production-Demand | - | - |
| 70 | 57 | 5819_PROEF | Accts 581-589 - Production-Energy-Fuel | - | - |
| 71 | 58 | 5819_PROENF | Accts 581-589 - Production-Energy-Non-Fuel | - | - |
| 72 | 59 | 5819_STO_PRO_D | Accts 581-589 - Storage-Production-Demand | - | - |
| 73 | 60 | 5819_STO_TRA_D | Accts 581-589 - Storage-Transmission-Demand | - | - |
| 74 | 61 | 5819_STO_DIS_DSUB | Accts 581-589 - Storage-Distribution-Demand-Subs | - | - |
| 75 | 62 | 5819_STO_DIS_DPRI | Accts 581-589 - Storage-Distribution-Demand-Primary | - | - |

**PUBLIC SERVICE OF NEW MEXICO**
**Base Period Ending June 30th, 2026**

| Class_Factors Line No. | Factor No. | | | Schedule 30 Industrial Power | Schedule 33B Large Service |
|---|---|---|---|---|---|
| 39 | 26 | NP_STO_DIS_DSECTOT | Net Plant with GI - Storage-Distribution-Demand-Secondary | - | - |
| 40 | 27 | NP_TRA_DTOT | Net Plant with GI - Transmission-Demand | 0.04483 | 0.00065 |
| 41 | 28 | NP_DIS_DSUBTOT | Net Plant with GI - Distribution-Demand-Subs | 0.03839 | - |
| 42 | 29 | NP_DIS_DPRITOT | Net Plant with GI - Distribution-Demand-Primary | - | - |
| 43 | 30 | NP_DIS_DSECTOT | Net Plant with GI - Distribution-Demand-Secondary | - | - |
| 44 | 31 | NP_DIS_CSRVTOT | Net Plant with GI - Distribution-Customer-Services | - | - |
| 45 | 32 | NP_DIS_CMTRTOT | Net Plant with GI - Distribution-Customer-Meters | 0.00167 | 0.00024 |
| 46 | 33 | NP_DIS_CMTRRTOT | Net Plant with GI - Distribution-Customer-Meter Reading | 0.00002 | 0.00000 |
| 47 | 34 | NP_DIS_CBILTOT | Net Plant with GI - Distribution-Customer-Billing & Collections | 0.00002 | 0.00000 |
| 48 | 35 | NP_DIS_CINFTOT | Net Plant with GI - Distribution-Customer-Service & Info | - | - |
| 49 | 36 | NP_DIS_COTHTOT | Net Plant with GI - Distribution-Customer-Other | 0.00771 | 0.00004 |
| 50 | 37 | NP_PRO_D_GI | Net GI Plant - Production-Demand | 0.05053 | 0.00069 |
| 51 | 38 | NP_PRO_EF_GI | Net GI Plant - Production-Energy-Fuel | - | - |
| 52 | 39 | NP_PRO_ENF_GI | Net GI Plant - Production-Energy-Non-Fuel | - | - |
| 53 | 40 | NP_STO_PRO_D_GI | Net GI Plant - Storage-Production-Demand | - | - |
| 54 | 41 | NP_STO_TRA_D_GI | Net GI Plant - Storage-Transmission-Demand | - | - |
| 55 | 42 | NP_STO_DIS_DSUB_GI | Net GI Plant - Storage-Distribution-Demand-Subs | - | - |
| 56 | 43 | NP_STO_DIS_DPRI_GI | Net GI Plant - Storage-Distribution-Demand-Primary | - | - |
| 57 | 44 | NP_STO_DIS_DSEC_GI | Net GI Plant - Storage-Distribution-Demand-Secondary | - | - |
| 58 | 45 | NP_TRA_D_GI | Net GI Plant - Transmission-Demand | 0.04483 | 0.00065 |
| 59 | 46 | NP_DIS_DSUB_GI | Net GI Plant - Distribution-Demand-Subs | 0.03839 | - |
| 60 | 47 | NP_DIS_DPRI_GI | Net GI Plant - Distribution-Demand-Primary | - | - |
| 61 | 48 | NP_DIS_DSEC_GI | Net GI Plant - Distribution-Demand-Secondary | - | - |
| 62 | 49 | NP_DIS_CSRV_GI | Net GI Plant - Distribution-Customer-Services | - | - |
| 63 | 50 | NP_DIS_CMTR_GI | Net GI Plant - Distribution-Customer-Meters | 0.00167 | 0.00024 |
| 64 | 51 | NP_DIS_CMTRR_GI | Net GI Plant - Distribution-Customer-Meter Reading | 0.00002 | 0.00000 |
| 65 | 52 | NP_DIS_CBIL_GI | Net GI Plant - Distribution-Customer-Billing & Collections | 0.00002 | 0.00000 |
| 66 | 53 | NP_DIS_CINF_GI | Net GI Plant - Distribution-Customer-Service & Info | - | - |
| 67 | 54 | NP_DIS_COTH_GI | Net GI Plant - Distribution-Customer-Other | 0.01442 | 0.00007 |
| 68 | 55 | NP_DIS_SVCSMTRS | Net Plant - Distribution-Customer-Services and Meters | - | - |
| 69 | 56 | 5819_PROD | Accts 581-589 - Production-Demand | - | - |
| 70 | 57 | 5819_PROEF | Accts 581-589 - Production-Energy-Fuel | - | - |
| 71 | 58 | 5819_PROENF | Accts 581-589 - Production-Energy-Non-Fuel | - | - |
| 72 | 59 | 5819_STO_PRO_D | Accts 581-589 - Storage-Production-Demand | - | - |
| 73 | 60 | 5819_STO_TRA_D | Accts 581-589 - Storage-Transmission-Demand | - | - |
| 74 | 61 | 5819_STO_DIS_DSUB | Accts 581-589 - Storage-Distribution-Demand-Subs | - | - |
| 75 | 62 | 5819_STO_DIS_DPRI | Accts 581-589 - Storage-Distribution-Demand-Primary | - | - |

**PUBLIC SERVICE OF NEW MEXICO**
**Base Period Ending June 30th, 2026**

| Class_Factors Line No. | Factor No. | | | Schedule 35B Lg Power Service | Schedule 36B Special Service Rate |
|---|---|---|---|---|---|
| 39 | 26 | NP_STO_DIS_DSECTOT | Net Plant with GI - Storage-Distribution-Demand-Secondary | - | - |
| 40 | 27 | NP_TRA_DTOT | Net Plant with GI - Transmission-Demand | 0.01197 | 0.12500 |
| 41 | 28 | NP_DIS_DSUBTOT | Net Plant with GI - Distribution-Demand-Subs | 0.01185 | - |
| 42 | 29 | NP_DIS_DPRITOT | Net Plant with GI - Distribution-Demand-Primary | - | - |
| 43 | 30 | NP_DIS_DSECTOT | Net Plant with GI - Distribution-Demand-Secondary | - | - |
| 44 | 31 | NP_DIS_CSRVTOT | Net Plant with GI - Distribution-Customer-Services | - | - |
| 45 | 32 | NP_DIS_CMTRTOT | Net Plant with GI - Distribution-Customer-Meters | 0.00083 | 0.00095 |
| 46 | 33 | NP_DIS_CMTRRTOT | Net Plant with GI - Distribution-Customer-Meter Reading | 0.00001 | 0.00001 |
| 47 | 34 | NP_DIS_CBILTOT | Net Plant with GI - Distribution-Customer-Billing & Collections | 0.00001 | 0.00001 |
| 48 | 35 | NP_DIS_CINFTOT | Net Plant with GI - Distribution-Customer-Service & Info | - | - |
| 49 | 36 | NP_DIS_COTHTOT | Net Plant with GI - Distribution-Customer-Other | 0.00191 | 0.00537 |
| 50 | 37 | NP_PRO_D_GI | Net GI Plant - Production-Demand | 0.01400 | - |
| 51 | 38 | NP_PRO_EF_GI | Net GI Plant - Production-Energy-Fuel | - | - |
| 52 | 39 | NP_PRO_ENF_GI | Net GI Plant - Production-Energy-Non-Fuel | - | - |
| 53 | 40 | NP_STO_PRO_D_GI | Net GI Plant - Storage-Production-Demand | - | - |
| 54 | 41 | NP_STO_TRA_D_GI | Net GI Plant - Storage-Transmission-Demand | - | - |
| 55 | 42 | NP_STO_DIS_DSUB_GI | Net GI Plant - Storage-Distribution-Demand-Subs | - | - |
| 56 | 43 | NP_STO_DIS_DPRI_GI | Net GI Plant - Storage-Distribution-Demand-Primary | - | - |
| 57 | 44 | NP_STO_DIS_DSEC_GI | Net GI Plant - Storage-Distribution-Demand-Secondary | - | - |
| 58 | 45 | NP_TRA_D_GI | Net GI Plant - Transmission-Demand | 0.01197 | 0.12500 |
| 59 | 46 | NP_DIS_DSUB_GI | Net GI Plant - Distribution-Demand-Subs | 0.01185 | - |
| 60 | 47 | NP_DIS_DPRI_GI | Net GI Plant - Distribution-Demand-Primary | - | - |
| 61 | 48 | NP_DIS_DSEC_GI | Net GI Plant - Distribution-Demand-Secondary | - | - |
| 62 | 49 | NP_DIS_CSRV_GI | Net GI Plant - Distribution-Customer-Services | - | - |
| 63 | 50 | NP_DIS_CMTR_GI | Net GI Plant - Distribution-Customer-Meters | 0.00083 | 0.00095 |
| 64 | 51 | NP_DIS_CMTRR_GI | Net GI Plant - Distribution-Customer-Meter Reading | 0.00001 | 0.00001 |
| 65 | 52 | NP_DIS_CBIL_GI | Net GI Plant - Distribution-Customer-Billing & Collections | 0.00001 | 0.00001 |
| 66 | 53 | NP_DIS_CINF_GI | Net GI Plant - Distribution-Customer-Service & Info | - | - |
| 67 | 54 | NP_DIS_COTH_GI | Net GI Plant - Distribution-Customer-Other | 0.00358 | 0.01004 |
| 68 | 55 | NP_DIS_SVCSMTRS | Net Plant - Distribution-Customer-Services and Meters | - | - |
| 69 | 56 | 5819_PROD | Accts 581-589 - Production-Demand | - | - |
| 70 | 57 | 5819_PROEF | Accts 581-589 - Production-Energy-Fuel | - | - |
| 71 | 58 | 5819_PROENF | Accts 581-589 - Production-Energy-Non-Fuel | - | - |
| 72 | 59 | 5819_STO_PRO_D | Accts 581-589 - Storage-Production-Demand | - | - |
| 73 | 60 | 5819_STO_TRA_D | Accts 581-589 - Storage-Transmission-Demand | - | - |
| 74 | 61 | 5819_STO_DIS_DSUB | Accts 581-589 - Storage-Distribution-Demand-Subs | - | - |
| 75 | 62 | 5819_STO_DIS_DPRI | Accts 581-589 - Storage-Distribution-Demand-Primary | - | - |

**PUBLIC SERVICE OF NEW MEXICO**
**Base Period Ending June 30th, 2026**

| Class_Factors Line No. | Factor No. | | | Schedule 6 Priv. Area Light | Schedule 20 Streetlighting |
|---|---|---|---|---|---|
| 39 | 26 | NP_STO_DIS_DSECTOT | Net Plant with GI - Storage-Distribution-Demand-Secondary | - | - |
| 40 | 27 | NP_TRA_DTOT | Net Plant with GI - Transmission-Demand | 0.00088 | 0.00232 |
| 41 | 28 | NP_DIS_DSUBTOT | Net Plant with GI - Distribution-Demand-Subs | 0.00183 | 0.00627 |
| 42 | 29 | NP_DIS_DPRITOT | Net Plant with GI - Distribution-Demand-Primary | 0.00193 | 0.00660 |
| 43 | 30 | NP_DIS_DSECTOT | Net Plant with GI - Distribution-Demand-Secondary | 0.00213 | 0.00730 |
| 44 | 31 | NP_DIS_CSRVTOT | Net Plant with GI - Distribution-Customer-Services | - | - |
| 45 | 32 | NP_DIS_CMTRTOT | Net Plant with GI - Distribution-Customer-Meters | - | - |
| 46 | 33 | NP_DIS_CMTRRTOT | Net Plant with GI - Distribution-Customer-Meter Reading | - | - |
| 47 | 34 | NP_DIS_CBILTOT | Net Plant with GI - Distribution-Customer-Billing & Collections | - | - |
| 48 | 35 | NP_DIS_CINFTOT | Net Plant with GI - Distribution-Customer-Service & Info | - | - |
| 49 | 36 | NP_DIS_COTHTOT | Net Plant with GI - Distribution-Customer-Other | 0.01733 | 0.46172 |
| 50 | 37 | NP_PRO_D_GI | Net GI Plant - Production-Demand | 0.00037 | 0.00100 |
| 51 | 38 | NP_PRO_EF_GI | Net GI Plant - Production-Energy-Fuel | - | - |
| 52 | 39 | NP_PRO_ENF_GI | Net GI Plant - Production-Energy-Non-Fuel | - | - |
| 53 | 40 | NP_STO_PRO_D_GI | Net GI Plant - Storage-Production-Demand | - | - |
| 54 | 41 | NP_STO_TRA_D_GI | Net GI Plant - Storage-Transmission-Demand | - | - |
| 55 | 42 | NP_STO_DIS_DSUB_GI | Net GI Plant - Storage-Distribution-Demand-Subs | - | - |
| 56 | 43 | NP_STO_DIS_DPRI_GI | Net GI Plant - Storage-Distribution-Demand-Primary | - | - |
| 57 | 44 | NP_STO_DIS_DSEC_GI | Net GI Plant - Storage-Distribution-Demand-Secondary | - | - |
| 58 | 45 | NP_TRA_D_GI | Net GI Plant - Transmission-Demand | 0.00088 | 0.00232 |
| 59 | 46 | NP_DIS_DSUB_GI | Net GI Plant - Distribution-Demand-Subs | 0.00183 | 0.00627 |
| 60 | 47 | NP_DIS_DPRI_GI | Net GI Plant - Distribution-Demand-Primary | 0.00193 | 0.00660 |
| 61 | 48 | NP_DIS_DSEC_GI | Net GI Plant - Distribution-Demand-Secondary | 0.00213 | 0.00730 |
| 62 | 49 | NP_DIS_CSRV_GI | Net GI Plant - Distribution-Customer-Services | - | - |
| 63 | 50 | NP_DIS_CMTR_GI | Net GI Plant - Distribution-Customer-Meters | - | - |
| 64 | 51 | NP_DIS_CMTRR_GI | Net GI Plant - Distribution-Customer-Meter Reading | - | - |
| 65 | 52 | NP_DIS_CBIL_GI | Net GI Plant - Distribution-Customer-Billing & Collections | - | - |
| 66 | 53 | NP_DIS_CINF_GI | Net GI Plant - Distribution-Customer-Service & Info | - | - |
| 67 | 54 | NP_DIS_COTH_GI | Net GI Plant - Distribution-Customer-Other | 0.00555 | 0.02013 |
| 68 | 55 | NP_DIS_SVCSMTRS | Net Plant - Distribution-Customer-Services and Meters | - | - |
| 69 | 56 | 5819_PROD | Accts 581-589 - Production-Demand | - | - |
| 70 | 57 | 5819_PROEF | Accts 581-589 - Production-Energy-Fuel | - | - |
| 71 | 58 | 5819_PROENF | Accts 581-589 - Production-Energy-Non-Fuel | - | - |
| 72 | 59 | 5819_STO_PRO_D | Accts 581-589 - Storage-Production-Demand | - | - |
| 73 | 60 | 5819_STO_TRA_D | Accts 581-589 - Storage-Transmission-Demand | - | - |
| 74 | 61 | 5819_STO_DIS_DSUB | Accts 581-589 - Storage-Distribution-Demand-Subs | - | - |
| 75 | 62 | 5819_STO_DIS_DPRI | Accts 581-589 - Storage-Distribution-Demand-Primary | - | - |

**PUBLIC SERVICE OF NEW MEXICO**
**Base Period Ending June 30th, 2026**

| Class_Factors Line No. | Factor No. | | | dule 20-Customer O Streetlighting |
|---|---|---|---|---|
| 39 | 26 | NP_STO_DIS_DSECTOT | Net Plant with GI - Storage-Distribution-Demand-Secondary | - |
| 40 | 27 | NP_TRA_DTOT | Net Plant with GI - Transmission-Demand | 0.00000 |
| 41 | 28 | NP_DIS_DSUBTOT | Net Plant with GI - Distribution-Demand-Subs | 0.00000 |
| 42 | 29 | NP_DIS_DPRITOT | Net Plant with GI - Distribution-Demand-Primary | 0.00000 |
| 43 | 30 | NP_DIS_DSECTOT | Net Plant with GI - Distribution-Demand-Secondary | 0.00000 |
| 44 | 31 | NP_DIS_CSRVTOT | Net Plant with GI - Distribution-Customer-Services | - |
| 45 | 32 | NP_DIS_CMTRTOT | Net Plant with GI - Distribution-Customer-Meters | - |
| 46 | 33 | NP_DIS_CMTRRTOT | Net Plant with GI - Distribution-Customer-Meter Reading | - |
| 47 | 34 | NP_DIS_CBILTOT | Net Plant with GI - Distribution-Customer-Billing & Collections | - |
| 48 | 35 | NP_DIS_CINFTOT | Net Plant with GI - Distribution-Customer-Service & Info | - |
| 49 | 36 | NP_DIS_COTHTOT | Net Plant with GI - Distribution-Customer-Other | 0.00000 |
| 50 | 37 | NP_PRO_D_GI | Net GI Plant - Production-Demand | 0.00000 |
| 51 | 38 | NP_PRO_EF_GI | Net GI Plant - Production-Energy-Fuel | - |
| 52 | 39 | NP_PRO_ENF_GI | Net GI Plant - Production-Energy-Non-Fuel | - |
| 53 | 40 | NP_STO_PRO_D_GI | Net GI Plant - Storage-Production-Demand | - |
| 54 | 41 | NP_STO_TRA_D_GI | Net GI Plant - Storage-Transmission-Demand | - |
| 55 | 42 | NP_STO_DIS_DSUB_GI | Net GI Plant - Storage-Distribution-Demand-Subs | - |
| 56 | 43 | NP_STO_DIS_DPRI_GI | Net GI Plant - Storage-Distribution-Demand-Primary | - |
| 57 | 44 | NP_STO_DIS_DSEC_GI | Net GI Plant - Storage-Distribution-Demand-Secondary | - |
| 58 | 45 | NP_TRA_D_GI | Net GI Plant - Transmission-Demand | 0.00000 |
| 59 | 46 | NP_DIS_DSUB_GI | Net GI Plant - Distribution-Demand-Subs | 0.00000 |
| 60 | 47 | NP_DIS_DPRI_GI | Net GI Plant - Distribution-Demand-Primary | 0.00000 |
| 61 | 48 | NP_DIS_DSEC_GI | Net GI Plant - Distribution-Demand-Secondary | 0.00000 |
| 62 | 49 | NP_DIS_CSRV_GI | Net GI Plant - Distribution-Customer-Services | - |
| 63 | 50 | NP_DIS_CMTR_GI | Net GI Plant - Distribution-Customer-Meters | - |
| 64 | 51 | NP_DIS_CMTRR_GI | Net GI Plant - Distribution-Customer-Meter Reading | - |
| 65 | 52 | NP_DIS_CBIL_GI | Net GI Plant - Distribution-Customer-Billing & Collections | - |
| 66 | 53 | NP_DIS_CINF_GI | Net GI Plant - Distribution-Customer-Service & Info | - |
| 67 | 54 | NP_DIS_COTH_GI | Net GI Plant - Distribution-Customer-Other | 0.00000 |
| 68 | 55 | NP_DIS_SVCSMTRS | Net Plant - Distribution-Customer-Services and Meters | - |
| 69 | 56 | 5819_PROD | Accts 581-589 - Production-Demand | - |
| 70 | 57 | 5819_PROEF | Accts 581-589 - Production-Energy-Fuel | - |
| 71 | 58 | 5819_PROENF | Accts 581-589 - Production-Energy-Non-Fuel | - |
| 72 | 59 | 5819_STO_PRO_D | Accts 581-589 - Storage-Production-Demand | - |
| 73 | 60 | 5819_STO_TRA_D | Accts 581-589 - Storage-Transmission-Demand | - |
| 74 | 61 | 5819_STO_DIS_DSUB | Accts 581-589 - Storage-Distribution-Demand-Subs | - |
| 75 | 62 | 5819_STO_DIS_DPRI | Accts 581-589 - Storage-Distribution-Demand-Primary | - |

**PUBLIC SERVICE OF NEW MEXICO**
**Base Period Ending June 30th, 2026**

Class_Factors

| Line No. | Factor No. | | | Other Input |
|---|---|---|---|---|
| 1 | 63 | 5819_STO_DIS_DSEC | Accts 581-589 - Storage-Distribution-Demand-Secondary | |
| 2 | 64 | 5819_TRAD | Accts 581-589 - Transmission-Demand | |
| 3 | 65 | 5819_DISDSUB | Accts 581-589 - Distribution-Demand-Subs | |
| 4 | 66 | 5819_DISDPRI | Accts 581-589 - Distribution-Demand-Primary | |
| 5 | 67 | 5819_DISDSEC | Accts 581-589 - Distribution-Demand-Secondary | |
| 6 | 68 | 5819_DISCSRV | Accts 581-589 - Distribution-Customer-Services | |
| 7 | 69 | 5819_DISCMTR | Accts 581-589 - Distribution-Customer-Meters | |
| 8 | 70 | 5819_DISCMTRR | Accts 581-589 - Distribution-Customer-Meter Reading | |
| 9 | 71 | 5819_DISCBIL | Accts 581-589 - Distribution-Customer-Billing & Collections | |
| 10 | 72 | 5819_DISCINF | Accts 581-589 - Distribution-Customer-Service & Info | |
| 11 | 73 | 5819_DISCOTH | Accts 581-589 - Distribution-Customer-Other | |
| 12 | 74 | 5918_PROD | Accts 591-598 - Production-Demand | |
| 13 | 75 | 5918_PROEF | Accts 591-598 - Production-Energy-Fuel | |
| 14 | 76 | 5918_PROENF | Accts 591-598 - Production-Energy-Non-Fuel | |
| 15 | 77 | 5918_STO_PRO_D | Accts 591-598 - Storage-Production-Demand | |
| 16 | 78 | 5918_STO_TRA_D | Accts 591-598 - Storage-Transmission-Demand | |
| 17 | 79 | 5918_STO_DIS_DSUB | Accts 591-598 - Storage-Distribution-Demand-Subs | |
| 18 | 80 | 5918_STO_DIS_DPRI | Accts 591-598 - Storage-Distribution-Demand-Primary | |
| 19 | 81 | 5918_STO_DIS_DSEC | Accts 591-598 - Storage-Distribution-Demand-Secondary | |
| 20 | 82 | 5918_TRAD | Accts 591-598 - Transmission-Demand | |
| 21 | 83 | 5918_DISDSUB | Accts 591-598 - Distribution-Demand-Subs | |
| 22 | 84 | 5918_DISDPRI | Accts 591-598 - Distribution-Demand-Primary | |
| 23 | 85 | 5918_DISDSEC | Accts 591-598 - Distribution-Demand-Secondary | |
| 24 | 86 | 5918_DISCSRV | Accts 591-598 - Distribution-Customer-Services | |
| 25 | 87 | 5918_DISCMTR | Accts 591-598 - Distribution-Customer-Meters | |
| 26 | 88 | 5918_DISCMTRR | Accts 591-598 - Distribution-Customer-Meter Reading | |
| 27 | 89 | 5918_DISCBIL | Accts 591-598 - Distribution-Customer-Billing & Collections | |
| 28 | 90 | 5918_DISCINF | Accts 591-598 - Distribution-Customer-Service & Info | |
| 29 | 91 | 5918_DISCOTH | Accts 591-598 - Distribution-Customer-Other | |
| 30 | 92 | CACT_DISCMTRR | Cust Accts - Distribution-Customer-Meter Reading | |
| 31 | 93 | CACT_DISCBIL | Cust Accts - Distribution-Customer-Billing & Collections | |
| 32 | 94 | CACT_DISCINF | Cust Accts - Distribution-Customer-Service & Info | |
| 33 | 95 | CACT_DISCOTH | Cust Accts - Distribution-Customer-Other | |
| 34 | 96 | LA_PROD | Labor - Production-Demand | |
| 35 | 97 | LA_PROEF | Labor - Production-Energy-Fuel | |
| 36 | 98 | LA_PROENF | Labor - Production-Energy-Non-Fuel | |
| 37 | 99 | LA_STO_PRO_D | Labor - Storage-Production-Demand | |
| 38 | 100 | LA_STO_TRA_D | Labor - Storage-Transmission-Demand | |
| 39 | 101 | LA_STO_DIS_DSUB | Labor - Storage-Distribution-Demand-Subs | |

**PUBLIC SERVICE OF NEW MEXICO**
**Base Period Ending June 30th, 2026**

| Class_Factors | | | | | Schedule 1 |
|---|---|---|---|---|---|
| Line No. | Factor No. | | | PNM Retail | Residential |
| 1 | 63 | 5819_STO_DIS_DSEC | Accts 581-589 - Storage-Distribution-Demand-Secondary | - | - |
| 2 | 64 | 5819_TRAD | Accts 581-589 - Transmission-Demand | - | - |
| 3 | 65 | 5819_DISDSUB | Accts 581-589 - Distribution-Demand-Subs | 1.00000 | 0.51204 |
| 4 | 66 | 5819_DISDPRI | Accts 581-589 - Distribution-Demand-Primary | 1.00000 | 0.53913 |
| 5 | 67 | 5819_DISDSEC | Accts 581-589 - Distribution-Demand-Secondary | 1.00000 | 0.59629 |
| 6 | 68 | 5819_DISCSRV | Accts 581-589 - Distribution-Customer-Services | 1.00000 | 0.91430 |
| 7 | 69 | 5819_DISCMTR | Accts 581-589 - Distribution-Customer-Meters | 1.00000 | 0.64381 |
| 8 | 70 | 5819_DISCMTRR | Accts 581-589 - Distribution-Customer-Meter Reading | - | - |
| 9 | 71 | 5819_DISCBIL | Accts 581-589 - Distribution-Customer-Billing & Collections | - | - |
| 10 | 72 | 5819_DISCINF | Accts 581-589 - Distribution-Customer-Service & Info | - | - |
| 11 | 73 | 5819_DISCOTH | Accts 581-589 - Distribution-Customer-Other | 1.00000 | 0.41328 |
| 12 | 74 | 5918_PROD | Accts 591-598 - Production-Demand | - | - |
| 13 | 75 | 5918_PROEF | Accts 591-598 - Production-Energy-Fuel | - | - |
| 14 | 76 | 5918_PROENF | Accts 591-598 - Production-Energy-Non-Fuel | - | - |
| 15 | 77 | 5918_STO_PRO_D | Accts 591-598 - Storage-Production-Demand | - | - |
| 16 | 78 | 5918_STO_TRA_D | Accts 591-598 - Storage-Transmission-Demand | - | - |
| 17 | 79 | 5918_STO_DIS_DSUB | Accts 591-598 - Storage-Distribution-Demand-Subs | - | - |
| 18 | 80 | 5918_STO_DIS_DPRI | Accts 591-598 - Storage-Distribution-Demand-Primary | - | - |
| 19 | 81 | 5918_STO_DIS_DSEC | Accts 591-598 - Storage-Distribution-Demand-Secondary | - | - |
| 20 | 82 | 5918_TRAD | Accts 591-598 - Transmission-Demand | - | - |
| 21 | 83 | 5918_DISDSUB | Accts 591-598 - Distribution-Demand-Subs | 1.00000 | 0.51204 |
| 22 | 84 | 5918_DISDPRI | Accts 591-598 - Distribution-Demand-Primary | 1.00000 | 0.53913 |
| 23 | 85 | 5918_DISDSEC | Accts 591-598 - Distribution-Demand-Secondary | 1.00000 | 0.59629 |
| 24 | 86 | 5918_DISCSRV | Accts 591-598 - Distribution-Customer-Services | 1.00000 | 0.91430 |
| 25 | 87 | 5918_DISCMTR | Accts 591-598 - Distribution-Customer-Meters | 1.00000 | 0.64381 |
| 26 | 88 | 5918_DISCMTRR | Accts 591-598 - Distribution-Customer-Meter Reading | - | - |
| 27 | 89 | 5918_DISCBIL | Accts 591-598 - Distribution-Customer-Billing & Collections | - | - |
| 28 | 90 | 5918_DISCINF | Accts 591-598 - Distribution-Customer-Service & Info | - | - |
| 29 | 91 | 5918_DISCOTH | Accts 591-598 - Distribution-Customer-Other | 1.00000 | 0.41328 |
| 30 | 92 | CACT_DISCMTRR | Cust Accts - Distribution-Customer-Meter Reading | 1.00000 | 0.89424 |
| 31 | 93 | CACT_DISCBIL | Cust Accts - Distribution-Customer-Billing & Collections | 1.00000 | 0.89424 |
| 32 | 94 | CACT_DISCINF | Cust Accts - Distribution-Customer-Service & Info | - | - |
| 33 | 95 | CACT_DISCOTH | Cust Accts - Distribution-Customer-Other | 1.00000 | 0.79253 |
| 34 | 96 | LA_PROD | Labor - Production-Demand | 1.00000 | 0.50393 |
| 35 | 97 | LA_PROEF | Labor - Production-Energy-Fuel | - | - |
| 36 | 98 | LA_PROENF | Labor - Production-Energy-Non-Fuel | - | - |
| 37 | 99 | LA_STO_PRO_D | Labor - Storage-Production-Demand | - | - |
| 38 | 100 | LA_STO_TRA_D | Labor - Storage-Transmission-Demand | - | - |
| 39 | 101 | LA_STO_DIS_DSUB | Labor - Storage-Distribution-Demand-Subs | - | - |

**PUBLIC SERVICE OF NEW MEXICO**
**Base Period Ending June 30th, 2026**

| Class_Factors Line No. | Factor No. | | | Schedule 1B Residential | Schedule 2 Small Power |
|---|---|---|---|---|---|
| 1 | 63 | 5819_STO_DIS_DSEC | Accts 581-589 - Storage-Distribution-Demand-Secondary | - | - |
| 2 | 64 | 5819_TRAD | Accts 581-589 - Transmission-Demand | - | - |
| 3 | 65 | 5819_DISDSUB | Accts 581-589 - Distribution-Demand-Subs | 0.00000 | 0.12370 |
| 4 | 66 | 5819_DISDPRI | Accts 581-589 - Distribution-Demand-Primary | 0.00000 | 0.13024 |
| 5 | 67 | 5819_DISDSEC | Accts 581-589 - Distribution-Demand-Secondary | 0.00000 | 0.14405 |
| 6 | 68 | 5819_DISCSRV | Accts 581-589 - Distribution-Customer-Services | 0.00000 | 0.08570 |
| 7 | 69 | 5819_DISCMTR | Accts 581-589 - Distribution-Customer-Meters | 0.00000 | 0.20874 |
| 8 | 70 | 5819_DISCMTRR | Accts 581-589 - Distribution-Customer-Meter Reading | - | - |
| 9 | 71 | 5819_DISCBIL | Accts 581-589 - Distribution-Customer-Billing & Collections | - | - |
| 10 | 72 | 5819_DISCINF | Accts 581-589 - Distribution-Customer-Service & Info | - | - |
| 11 | 73 | 5819_DISCOTH | Accts 581-589 - Distribution-Customer-Other | 0.00000 | 0.05229 |
| 12 | 74 | 5918_PROD | Accts 591-598 - Production-Demand | - | - |
| 13 | 75 | 5918_PROEF | Accts 591-598 - Production-Energy-Fuel | - | - |
| 14 | 76 | 5918_PROENF | Accts 591-598 - Production-Energy-Non-Fuel | - | - |
| 15 | 77 | 5918_STO_PRO_D | Accts 591-598 - Storage-Production-Demand | - | - |
| 16 | 78 | 5918_STO_TRA_D | Accts 591-598 - Storage-Transmission-Demand | - | - |
| 17 | 79 | 5918_STO_DIS_DSUB | Accts 591-598 - Storage-Distribution-Demand-Subs | - | - |
| 18 | 80 | 5918_STO_DIS_DPRI | Accts 591-598 - Storage-Distribution-Demand-Primary | - | - |
| 19 | 81 | 5918_STO_DIS_DSEC | Accts 591-598 - Storage-Distribution-Demand-Secondary | - | - |
| 20 | 82 | 5918_TRAD | Accts 591-598 - Transmission-Demand | - | - |
| 21 | 83 | 5918_DISDSUB | Accts 591-598 - Distribution-Demand-Subs | 0.00000 | 0.12370 |
| 22 | 84 | 5918_DISDPRI | Accts 591-598 - Distribution-Demand-Primary | 0.00000 | 0.13024 |
| 23 | 85 | 5918_DISDSEC | Accts 591-598 - Distribution-Demand-Secondary | 0.00000 | 0.14405 |
| 24 | 86 | 5918_DISCSRV | Accts 591-598 - Distribution-Customer-Services | 0.00000 | 0.08570 |
| 25 | 87 | 5918_DISCMTR | Accts 591-598 - Distribution-Customer-Meters | 0.00000 | 0.20874 |
| 26 | 88 | 5918_DISCMTRR | Accts 591-598 - Distribution-Customer-Meter Reading | - | - |
| 27 | 89 | 5918_DISCBIL | Accts 591-598 - Distribution-Customer-Billing & Collections | - | - |
| 28 | 90 | 5918_DISCINF | Accts 591-598 - Distribution-Customer-Service & Info | - | - |
| 29 | 91 | 5918_DISCOTH | Accts 591-598 - Distribution-Customer-Other | 0.00000 | 0.05229 |
| 30 | 92 | CACT_DISCMTRR | Cust Accts - Distribution-Customer-Meter Reading | - | 0.09685 |
| 31 | 93 | CACT_DISCBIL | Cust Accts - Distribution-Customer-Billing & Collections | - | 0.09685 |
| 32 | 94 | CACT_DISCINF | Cust Accts - Distribution-Customer-Service & Info | - | - |
| 33 | 95 | CACT_DISCOTH | Cust Accts - Distribution-Customer-Other | - | 0.10027 |
| 34 | 96 | LA_PROD | Labor - Production-Demand | 0.00000 | 0.11338 |
| 35 | 97 | LA_PROEF | Labor - Production-Energy-Fuel | - | - |
| 36 | 98 | LA_PROENF | Labor - Production-Energy-Non-Fuel | - | - |
| 37 | 99 | LA_STO_PRO_D | Labor - Storage-Production-Demand | - | - |
| 38 | 100 | LA_STO_TRA_D | Labor - Storage-Transmission-Demand | - | - |
| 39 | 101 | LA_STO_DIS_DSUB | Labor - Storage-Distribution-Demand-Subs | - | - |

**PUBLIC SERVICE OF NEW MEXICO**
**Base Period Ending June 30th, 2026**

| Class_Factors Line No. | Factor No. | | | Schedule 2B Small Power | Schedule 3B General Power |
|---|---|---|---|---|---|
| 1 | 63 | 5819_STO_DIS_DSEC | Accts 581-589 - Storage-Distribution-Demand-Secondary | - | - |
| 2 | 64 | 5819_TRAD | Accts 581-589 - Transmission-Demand | - | - |
| 3 | 65 | 5819_DISDSUB | Accts 581-589 - Distribution-Demand-Subs | 0.00000 | 0.14987 |
| 4 | 66 | 5819_DISDPRI | Accts 581-589 - Distribution-Demand-Primary | 0.00000 | 0.15780 |
| 5 | 67 | 5819_DISDSEC | Accts 581-589 - Distribution-Demand-Secondary | 0.00000 | 0.17453 |
| 6 | 68 | 5819_DISCSRV | Accts 581-589 - Distribution-Customer-Services | 0.00000 | - |
| 7 | 69 | 5819_DISCMTR | Accts 581-589 - Distribution-Customer-Meters | 0.00000 | 0.06274 |
| 8 | 70 | 5819_DISCMTRR | Accts 581-589 - Distribution-Customer-Meter Reading | - | - |
| 9 | 71 | 5819_DISCBIL | Accts 581-589 - Distribution-Customer-Billing & Collections | - | - |
| 10 | 72 | 5819_DISCINF | Accts 581-589 - Distribution-Customer-Service & Info | - | - |
| 11 | 73 | 5819_DISCOTH | Accts 581-589 - Distribution-Customer-Other | 0.00000 | 0.01946 |
| 12 | 74 | 5918_PROD | Accts 591-598 - Production-Demand | - | - |
| 13 | 75 | 5918_PROEF | Accts 591-598 - Production-Energy-Fuel | - | - |
| 14 | 76 | 5918_PROENF | Accts 591-598 - Production-Energy-Non-Fuel | - | - |
| 15 | 77 | 5918_STO_PRO_D | Accts 591-598 - Storage-Production-Demand | - | - |
| 16 | 78 | 5918_STO_TRA_D | Accts 591-598 - Storage-Transmission-Demand | - | - |
| 17 | 79 | 5918_STO_DIS_DSUB | Accts 591-598 - Storage-Distribution-Demand-Subs | - | - |
| 18 | 80 | 5918_STO_DIS_DPRI | Accts 591-598 - Storage-Distribution-Demand-Primary | - | - |
| 19 | 81 | 5918_STO_DIS_DSEC | Accts 591-598 - Storage-Distribution-Demand-Secondary | - | - |
| 20 | 82 | 5918_TRAD | Accts 591-598 - Transmission-Demand | - | - |
| 21 | 83 | 5918_DISDSUB | Accts 591-598 - Distribution-Demand-Subs | 0.00000 | 0.14987 |
| 22 | 84 | 5918_DISDPRI | Accts 591-598 - Distribution-Demand-Primary | 0.00000 | 0.15780 |
| 23 | 85 | 5918_DISDSEC | Accts 591-598 - Distribution-Demand-Secondary | 0.00000 | 0.17453 |
| 24 | 86 | 5918_DISCSRV | Accts 591-598 - Distribution-Customer-Services | 0.00000 | - |
| 25 | 87 | 5918_DISCMTR | Accts 591-598 - Distribution-Customer-Meters | 0.00000 | 0.06274 |
| 26 | 88 | 5918_DISCMTRR | Accts 591-598 - Distribution-Customer-Meter Reading | - | - |
| 27 | 89 | 5918_DISCBIL | Accts 591-598 - Distribution-Customer-Billing & Collections | - | - |
| 28 | 90 | 5918_DISCINF | Accts 591-598 - Distribution-Customer-Service & Info | - | - |
| 29 | 91 | 5918_DISCOTH | Accts 591-598 - Distribution-Customer-Other | 0.00000 | 0.01946 |
| 30 | 92 | CACT_DISCMTRR | Cust Accts - Distribution-Customer-Meter Reading | - | 0.00502 |
| 31 | 93 | CACT_DISCBIL | Cust Accts - Distribution-Customer-Billing & Collections | - | 0.00502 |
| 32 | 94 | CACT_DISCINF | Cust Accts - Distribution-Customer-Service & Info | - | - |
| 33 | 95 | CACT_DISCOTH | Cust Accts - Distribution-Customer-Other | - | 0.03731 |
| 34 | 96 | LA_PROD | Labor - Production-Demand | 0.00000 | 0.16519 |
| 35 | 97 | LA_PROEF | Labor - Production-Energy-Fuel | - | - |
| 36 | 98 | LA_PROENF | Labor - Production-Energy-Non-Fuel | - | - |
| 37 | 99 | LA_STO_PRO_D | Labor - Storage-Production-Demand | - | - |
| 38 | 100 | LA_STO_TRA_D | Labor - Storage-Transmission-Demand | - | - |
| 39 | 101 | LA_STO_DIS_DSUB | Labor - Storage-Distribution-Demand-Subs | - | - |

This schedule is sponsored by PNM Witness Larkin

**PUBLIC SERVICE OF NEW MEXICO**
**Base Period Ending June 30th, 2026**

| Class_Factors Line No. | Factor No. | | | Schedule 3C GP Low LF | Schedule 3D General Power Gov |
|---|---|---|---|---|---|
| 1 | 63 | 5819_STO_DIS_DSEC | Accts 581-589 - Storage-Distribution-Demand-Secondary | - | - |
| 2 | 64 | 5819_TRAD | Accts 581-589 - Transmission-Demand | - | - |
| 3 | 65 | 5819_DISDSUB | Accts 581-589 - Distribution-Demand-Subs | 0.04594 | 0.01006 |
| 4 | 66 | 5819_DISDPRI | Accts 581-589 - Distribution-Demand-Primary | 0.04837 | 0.01060 |
| 5 | 67 | 5819_DISDSEC | Accts 581-589 - Distribution-Demand-Secondary | 0.05349 | 0.01172 |
| 6 | 68 | 5819_DISCSRV | Accts 581-589 - Distribution-Customer-Services | - | - |
| 7 | 69 | 5819_DISCMTR | Accts 581-589 - Distribution-Customer-Meters | 0.02751 | 0.00388 |
| 8 | 70 | 5819_DISCMTRR | Accts 581-589 - Distribution-Customer-Meter Reading | - | - |
| 9 | 71 | 5819_DISCBIL | Accts 581-589 - Distribution-Customer-Billing & Collections | - | - |
| 10 | 72 | 5819_DISCINF | Accts 581-589 - Distribution-Customer-Service & Info | - | - |
| 11 | 73 | 5819_DISCOTH | Accts 581-589 - Distribution-Customer-Other | 0.00485 | 0.00137 |
| 12 | 74 | 5918_PROD | Accts 591-598 - Production-Demand | - | - |
| 13 | 75 | 5918_PROEF | Accts 591-598 - Production-Energy-Fuel | - | - |
| 14 | 76 | 5918_PROENF | Accts 591-598 - Production-Energy-Non-Fuel | - | - |
| 15 | 77 | 5918_STO_PRO_D | Accts 591-598 - Storage-Production-Demand | - | - |
| 16 | 78 | 5918_STO_TRA_D | Accts 591-598 - Storage-Transmission-Demand | - | - |
| 17 | 79 | 5918_STO_DIS_DSUB | Accts 591-598 - Storage-Distribution-Demand-Subs | - | - |
| 18 | 80 | 5918_STO_DIS_DPRI | Accts 591-598 - Storage-Distribution-Demand-Primary | - | - |
| 19 | 81 | 5918_STO_DIS_DSEC | Accts 591-598 - Storage-Distribution-Demand-Secondary | - | - |
| 20 | 82 | 5918_TRAD | Accts 591-598 - Transmission-Demand | - | - |
| 21 | 83 | 5918_DISDSUB | Accts 591-598 - Distribution-Demand-Subs | 0.04594 | 0.01006 |
| 22 | 84 | 5918_DISDPRI | Accts 591-598 - Distribution-Demand-Primary | 0.04837 | 0.01060 |
| 23 | 85 | 5918_DISDSEC | Accts 591-598 - Distribution-Demand-Secondary | 0.05349 | 0.01172 |
| 24 | 86 | 5918_DISCSRV | Accts 591-598 - Distribution-Customer-Services | - | - |
| 25 | 87 | 5918_DISCMTR | Accts 591-598 - Distribution-Customer-Meters | 0.02751 | 0.00388 |
| 26 | 88 | 5918_DISCMTRR | Accts 591-598 - Distribution-Customer-Meter Reading | - | - |
| 27 | 89 | 5918_DISCBIL | Accts 591-598 - Distribution-Customer-Billing & Collections | - | - |
| 28 | 90 | 5918_DISCINF | Accts 591-598 - Distribution-Customer-Service & Info | - | - |
| 29 | 91 | 5918_DISCOTH | Accts 591-598 - Distribution-Customer-Other | 0.00485 | 0.00137 |
| 30 | 92 | CACT_DISCMTRR | Cust Accts - Distribution-Customer-Meter Reading | 0.00220 | 0.00031 |
| 31 | 93 | CACT_DISCBIL | Cust Accts - Distribution-Customer-Billing & Collections | 0.00220 | 0.00031 |
| 32 | 94 | CACT_DISCINF | Cust Accts - Distribution-Customer-Service & Info | - | - |
| 33 | 95 | CACT_DISCOTH | Cust Accts - Distribution-Customer-Other | 0.00931 | 0.00263 |
| 34 | 96 | LA_PROD | Labor - Production-Demand | 0.03486 | 0.01121 |
| 35 | 97 | LA_PROEF | Labor - Production-Energy-Fuel | - | - |
| 36 | 98 | LA_PROENF | Labor - Production-Energy-Non-Fuel | - | - |
| 37 | 99 | LA_STO_PRO_D | Labor - Storage-Production-Demand | - | - |
| 38 | 100 | LA_STO_TRA_D | Labor - Storage-Transmission-Demand | - | - |
| 39 | 101 | LA_STO_DIS_DSUB | Labor - Storage-Distribution-Demand-Subs | - | - |

**PUBLIC SERVICE OF NEW MEXICO**
**Base Period Ending June 30th, 2026**

| Class_Factors Line No. | Factor No. | | | Schedule 3E GP Low LF Gov |
|---|---|---|---|---|
| 1 | 63 | 5819_STO_DIS_DSEC | Accts 581-589 - Storage-Distribution-Demand-Secondary | - |
| 2 | 64 | 5819_TRAD | Accts 581-589 - Transmission-Demand | - |
| 3 | 65 | 5819_DISDSUB | Accts 581-589 - Distribution-Demand-Subs | 0.00412 |
| 4 | 66 | 5819_DISDPRI | Accts 581-589 - Distribution-Demand-Primary | 0.00434 |
| 5 | 67 | 5819_DISDSEC | Accts 581-589 - Distribution-Demand-Secondary | 0.00480 |
| 6 | 68 | 5819_DISCSRV | Accts 581-589 - Distribution-Customer-Services | - |
| 7 | 69 | 5819_DISCMTR | Accts 581-589 - Distribution-Customer-Meters | 0.00161 |
| 8 | 70 | 5819_DISCMTRR | Accts 581-589 - Distribution-Customer-Meter Reading | - |
| 9 | 71 | 5819_DISCBIL | Accts 581-589 - Distribution-Customer-Billing & Collections | - |
| 10 | 72 | 5819_DISCINF | Accts 581-589 - Distribution-Customer-Service & Info | - |
| 11 | 73 | 5819_DISCOTH | Accts 581-589 - Distribution-Customer-Other | 0.00035 |
| 12 | 74 | 5918_PROD | Accts 591-598 - Production-Demand | - |
| 13 | 75 | 5918_PROEF | Accts 591-598 - Production-Energy-Fuel | - |
| 14 | 76 | 5918_PROENF | Accts 591-598 - Production-Energy-Non-Fuel | - |
| 15 | 77 | 5918_STO_PRO_D | Accts 591-598 - Storage-Production-Demand | - |
| 16 | 78 | 5918_STO_TRA_D | Accts 591-598 - Storage-Transmission-Demand | - |
| 17 | 79 | 5918_STO_DIS_DSUB | Accts 591-598 - Storage-Distribution-Demand-Subs | - |
| 18 | 80 | 5918_STO_DIS_DPRI | Accts 591-598 - Storage-Distribution-Demand-Primary | - |
| 19 | 81 | 5918_STO_DIS_DSEC | Accts 591-598 - Storage-Distribution-Demand-Secondary | - |
| 20 | 82 | 5918_TRAD | Accts 591-598 - Transmission-Demand | - |
| 21 | 83 | 5918_DISDSUB | Accts 591-598 - Distribution-Demand-Subs | 0.00412 |
| 22 | 84 | 5918_DISDPRI | Accts 591-598 - Distribution-Demand-Primary | 0.00434 |
| 23 | 85 | 5918_DISDSEC | Accts 591-598 - Distribution-Demand-Secondary | 0.00480 |
| 24 | 86 | 5918_DISCSRV | Accts 591-598 - Distribution-Customer-Services | - |
| 25 | 87 | 5918_DISCMTR | Accts 591-598 - Distribution-Customer-Meters | 0.00161 |
| 26 | 88 | 5918_DISCMTRR | Accts 591-598 - Distribution-Customer-Meter Reading | - |
| 27 | 89 | 5918_DISCBIL | Accts 591-598 - Distribution-Customer-Billing & Collections | - |
| 28 | 90 | 5918_DISCINF | Accts 591-598 - Distribution-Customer-Service & Info | - |
| 29 | 91 | 5918_DISCOTH | Accts 591-598 - Distribution-Customer-Other | 0.00035 |
| 30 | 92 | CACT_DISCMTRR | Cust Accts - Distribution-Customer-Meter Reading | 0.00013 |
| 31 | 93 | CACT_DISCBIL | Cust Accts - Distribution-Customer-Billing & Collections | 0.00013 |
| 32 | 94 | CACT_DISCINF | Cust Accts - Distribution-Customer-Service & Info | - |
| 33 | 95 | CACT_DISCOTH | Cust Accts - Distribution-Customer-Other | 0.00066 |
| 34 | 96 | LA_PROD | Labor - Production-Demand | 0.00287 |
| 35 | 97 | LA_PROEF | Labor - Production-Energy-Fuel | - |
| 36 | 98 | LA_PROENF | Labor - Production-Energy-Non-Fuel | - |
| 37 | 99 | LA_STO_PRO_D | Labor - Storage-Production-Demand | - |
| 38 | 100 | LA_STO_TRA_D | Labor - Storage-Transmission-Demand | - |
| 39 | 101 | LA_STO_DIS_DSUB | Labor - Storage-Distribution-Demand-Subs | - |

This schedule is sponsored by PNM Witness Larkin

**PUBLIC SERVICE OF NEW MEXICO**
**Base Period Ending June 30th, 2026**

| Line No. | Class_Factors Factor No. | | | Schedule 3F GP Charging Stations | Schedule 4 Large Power |
|---|---|---|---|---|---|
| 1 | 63 | 5819_STO_DIS_DSEC | Accts 581-589 - Storage-Distribution-Demand-Secondary | - | - |
| 2 | 64 | 5819_TRAD | Accts 581-589 - Transmission-Demand | - | - |
| 3 | 65 | 5819_DISDSUB | Accts 581-589 - Distribution-Demand-Subs | 0.00174 | 0.06821 |
| 4 | 66 | 5819_DISDPRI | Accts 581-589 - Distribution-Demand-Primary | 0.00184 | 0.07182 |
| 5 | 67 | 5819_DISDSEC | Accts 581-589 - Distribution-Demand-Secondary | 0.00203 | - |
| 6 | 68 | 5819_DISCSRV | Accts 581-589 - Distribution-Customer-Services | - | - |
| 7 | 69 | 5819_DISCMTR | Accts 581-589 - Distribution-Customer-Meters | 0.00036 | 0.02084 |
| 8 | 70 | 5819_DISCMTRR | Accts 581-589 - Distribution-Customer-Meter Reading | - | - |
| 9 | 71 | 5819_DISCBIL | Accts 581-589 - Distribution-Customer-Billing & Collections | - | - |
| 10 | 72 | 5819_DISCINF | Accts 581-589 - Distribution-Customer-Service & Info | - | - |
| 11 | 73 | 5819_DISCOTH | Accts 581-589 - Distribution-Customer-Other | 0.00010 | 0.01049 |
| 12 | 74 | 5918_PROD | Accts 591-598 - Production-Demand | - | - |
| 13 | 75 | 5918_PROEF | Accts 591-598 - Production-Energy-Fuel | - | - |
| 14 | 76 | 5918_PROENF | Accts 591-598 - Production-Energy-Non-Fuel | - | - |
| 15 | 77 | 5918_STO_PRO_D | Accts 591-598 - Storage-Production-Demand | - | - |
| 16 | 78 | 5918_STO_TRA_D | Accts 591-598 - Storage-Transmission-Demand | - | - |
| 17 | 79 | 5918_STO_DIS_DSUB | Accts 591-598 - Storage-Distribution-Demand-Subs | - | - |
| 18 | 80 | 5918_STO_DIS_DPRI | Accts 591-598 - Storage-Distribution-Demand-Primary | - | - |
| 19 | 81 | 5918_STO_DIS_DSEC | Accts 591-598 - Storage-Distribution-Demand-Secondary | - | - |
| 20 | 82 | 5918_TRAD | Accts 591-598 - Transmission-Demand | - | - |
| 21 | 83 | 5918_DISDSUB | Accts 591-598 - Distribution-Demand-Subs | 0.00174 | 0.06821 |
| 22 | 84 | 5918_DISDPRI | Accts 591-598 - Distribution-Demand-Primary | 0.00184 | 0.07182 |
| 23 | 85 | 5918_DISDSEC | Accts 591-598 - Distribution-Demand-Secondary | 0.00203 | - |
| 24 | 86 | 5918_DISCSRV | Accts 591-598 - Distribution-Customer-Services | - | - |
| 25 | 87 | 5918_DISCMTR | Accts 591-598 - Distribution-Customer-Meters | 0.00036 | 0.02084 |
| 26 | 88 | 5918_DISCMTRR | Accts 591-598 - Distribution-Customer-Meter Reading | - | - |
| 27 | 89 | 5918_DISCBIL | Accts 591-598 - Distribution-Customer-Billing & Collections | - | - |
| 28 | 90 | 5918_DISCINF | Accts 591-598 - Distribution-Customer-Service & Info | - | - |
| 29 | 91 | 5918_DISCOTH | Accts 591-598 - Distribution-Customer-Other | 0.00010 | 0.01049 |
| 30 | 92 | CACT_DISCMTRR | Cust Accts - Distribution-Customer-Meter Reading | 0.00003 | 0.00031 |
| 31 | 93 | CACT_DISCBIL | Cust Accts - Distribution-Customer-Billing & Collections | 0.00003 | 0.00031 |
| 32 | 94 | CACT_DISCINF | Cust Accts - Distribution-Customer-Service & Info | - | - |
| 33 | 95 | CACT_DISCOTH | Cust Accts - Distribution-Customer-Other | 0.00018 | 0.02011 |
| 34 | 96 | LA_PROD | Labor - Production-Demand | 0.00070 | 0.08252 |
| 35 | 97 | LA_PROEF | Labor - Production-Energy-Fuel | - | - |
| 36 | 98 | LA_PROENF | Labor - Production-Energy-Non-Fuel | - | - |
| 37 | 99 | LA_STO_PRO_D | Labor - Storage-Production-Demand | - | - |
| 38 | 100 | LA_STO_TRA_D | Labor - Storage-Transmission-Demand | - | - |
| 39 | 101 | LA_STO_DIS_DSUB | Labor - Storage-Distribution-Demand-Subs | - | - |

This schedule is sponsored by PNM Witness Larkin

**PUBLIC SERVICE OF NEW MEXICO**
**Base Period Ending June 30th, 2026**

| Class_Factors Line No. | Factor No. | | | Schedule 5 Industrial Power | Schedule 10 Irrigation |
|---|---|---|---|---|---|
| 1 | 63 | 5819_STO_DIS_DSEC | Accts 581-589 - Storage-Distribution-Demand-Secondary | - | - |
| 2 | 64 | 5819_TRAD | Accts 581-589 - Transmission-Demand | - | - |
| 3 | 65 | 5819_DISDSUB | Accts 581-589 - Distribution-Demand-Subs | - | 0.00313 |
| 4 | 66 | 5819_DISDPRI | Accts 581-589 - Distribution-Demand-Primary | - | 0.00330 |
| 5 | 67 | 5819_DISDSEC | Accts 581-589 - Distribution-Demand-Secondary | - | 0.00365 |
| 6 | 68 | 5819_DISCSRV | Accts 581-589 - Distribution-Customer-Services | - | - |
| 7 | 69 | 5819_DISCMTR | Accts 581-589 - Distribution-Customer-Meters | 0.00012 | 0.00705 |
| 8 | 70 | 5819_DISCMTRR | Accts 581-589 - Distribution-Customer-Meter Reading | - | - |
| 9 | 71 | 5819_DISCBIL | Accts 581-589 - Distribution-Customer-Billing & Collections | - | - |
| 10 | 72 | 5819_DISCINF | Accts 581-589 - Distribution-Customer-Service & Info | - | - |
| 11 | 73 | 5819_DISCOTH | Accts 581-589 - Distribution-Customer-Other | 0.00015 | 0.00052 |
| 12 | 74 | 5918_PROD | Accts 591-598 - Production-Demand | - | - |
| 13 | 75 | 5918_PROEF | Accts 591-598 - Production-Energy-Fuel | - | - |
| 14 | 76 | 5918_PROENF | Accts 591-598 - Production-Energy-Non-Fuel | - | - |
| 15 | 77 | 5918_STO_PRO_D | Accts 591-598 - Storage-Production-Demand | - | - |
| 16 | 78 | 5918_STO_TRA_D | Accts 591-598 - Storage-Transmission-Demand | - | - |
| 17 | 79 | 5918_STO_DIS_DSUB | Accts 591-598 - Storage-Distribution-Demand-Subs | - | - |
| 18 | 80 | 5918_STO_DIS_DPRI | Accts 591-598 - Storage-Distribution-Demand-Primary | - | - |
| 19 | 81 | 5918_STO_DIS_DSEC | Accts 591-598 - Storage-Distribution-Demand-Secondary | - | - |
| 20 | 82 | 5918_TRAD | Accts 591-598 - Transmission-Demand | - | - |
| 21 | 83 | 5918_DISDSUB | Accts 591-598 - Distribution-Demand-Subs | - | 0.00313 |
| 22 | 84 | 5918_DISDPRI | Accts 591-598 - Distribution-Demand-Primary | - | 0.00330 |
| 23 | 85 | 5918_DISDSEC | Accts 591-598 - Distribution-Demand-Secondary | - | 0.00365 |
| 24 | 86 | 5918_DISCSRV | Accts 591-598 - Distribution-Customer-Services | - | - |
| 25 | 87 | 5918_DISCMTR | Accts 591-598 - Distribution-Customer-Meters | 0.00012 | 0.00705 |
| 26 | 88 | 5918_DISCMTRR | Accts 591-598 - Distribution-Customer-Meter Reading | - | - |
| 27 | 89 | 5918_DISCBIL | Accts 591-598 - Distribution-Customer-Billing & Collections | - | - |
| 28 | 90 | 5918_DISCINF | Accts 591-598 - Distribution-Customer-Service & Info | - | - |
| 29 | 91 | 5918_DISCOTH | Accts 591-598 - Distribution-Customer-Other | 0.00015 | 0.00052 |
| 30 | 92 | CACT_DISCMTRR | Cust Accts - Distribution-Customer-Meter Reading | 0.00000 | 0.00056 |
| 31 | 93 | CACT_DISCBIL | Cust Accts - Distribution-Customer-Billing & Collections | 0.00000 | 0.00056 |
| 32 | 94 | CACT_DISCINF | Cust Accts - Distribution-Customer-Service & Info | - | - |
| 33 | 95 | CACT_DISCOTH | Cust Accts - Distribution-Customer-Other | 0.00028 | 0.00100 |
| 34 | 96 | LA_PROD | Labor - Production-Demand | 0.00173 | 0.00235 |
| 35 | 97 | LA_PROEF | Labor - Production-Energy-Fuel | - | - |
| 36 | 98 | LA_PROENF | Labor - Production-Energy-Non-Fuel | - | - |
| 37 | 99 | LA_STO_PRO_D | Labor - Storage-Production-Demand | - | - |
| 38 | 100 | LA_STO_TRA_D | Labor - Storage-Transmission-Demand | - | - |
| 39 | 101 | LA_STO_DIS_DSUB | Labor - Storage-Distribution-Demand-Subs | - | - |

**PUBLIC SERVICE OF NEW MEXICO**
**Base Period Ending June 30th, 2026**

| Line No. | Class_Factors Factor No. | | | Schedule 11 Water & Sewage | Schedule 15 Industrial Power |
|---|---|---|---|---|---|
| 1 | 63 | 5819_STO_DIS_DSEC | Accts 581-589 - Storage-Distribution-Demand-Secondary | - | - |
| 2 | 64 | 5819_TRAD | Accts 581-589 - Transmission-Demand | - | - |
| 3 | 65 | 5819_DISDSUB | Accts 581-589 - Distribution-Demand-Subs | 0.02284 | - |
| 4 | 66 | 5819_DISDPRI | Accts 581-589 - Distribution-Demand-Primary | 0.02405 | - |
| 5 | 67 | 5819_DISDSEC | Accts 581-589 - Distribution-Demand-Secondary | - | - |
| 6 | 68 | 5819_DISCSRV | Accts 581-589 - Distribution-Customer-Services | - | - |
| 7 | 69 | 5819_DISCMTR | Accts 581-589 - Distribution-Customer-Meters | 0.01917 | 0.00 |
| 8 | 70 | 5819_DISCMTRR | Accts 581-589 - Distribution-Customer-Meter Reading | - | - |
| 9 | 71 | 5819_DISCBIL | Accts 581-589 - Distribution-Customer-Billing & Collections | - | - |
| 10 | 72 | 5819_DISCINF | Accts 581-589 - Distribution-Customer-Service & Info | - | - |
| 11 | 73 | 5819_DISCOTH | Accts 581-589 - Distribution-Customer-Other | 0.00223 | 0.00 |
| 12 | 74 | 5918_PROD | Accts 591-598 - Production-Demand | - | - |
| 13 | 75 | 5918_PROEF | Accts 591-598 - Production-Energy-Fuel | - | - |
| 14 | 76 | 5918_PROENF | Accts 591-598 - Production-Energy-Non-Fuel | - | - |
| 15 | 77 | 5918_STO_PRO_D | Accts 591-598 - Storage-Production-Demand | - | - |
| 16 | 78 | 5918_STO_TRA_D | Accts 591-598 - Storage-Transmission-Demand | - | - |
| 17 | 79 | 5918_STO_DIS_DSUB | Accts 591-598 - Storage-Distribution-Demand-Subs | - | - |
| 18 | 80 | 5918_STO_DIS_DPRI | Accts 591-598 - Storage-Distribution-Demand-Primary | - | - |
| 19 | 81 | 5918_STO_DIS_DSEC | Accts 591-598 - Storage-Distribution-Demand-Secondary | - | - |
| 20 | 82 | 5918_TRAD | Accts 591-598 - Transmission-Demand | - | - |
| 21 | 83 | 5918_DISDSUB | Accts 591-598 - Distribution-Demand-Subs | 0.02284 | - |
| 22 | 84 | 5918_DISDPRI | Accts 591-598 - Distribution-Demand-Primary | 0.02405 | - |
| 23 | 85 | 5918_DISDSEC | Accts 591-598 - Distribution-Demand-Secondary | - | - |
| 24 | 86 | 5918_DISCSRV | Accts 591-598 - Distribution-Customer-Services | - | - |
| 25 | 87 | 5918_DISCMTR | Accts 591-598 - Distribution-Customer-Meters | 0.01917 | 0.00 |
| 26 | 88 | 5918_DISCMTRR | Accts 591-598 - Distribution-Customer-Meter Reading | - | - |
| 27 | 89 | 5918_DISCBIL | Accts 591-598 - Distribution-Customer-Billing & Collections | - | - |
| 28 | 90 | 5918_DISCINF | Accts 591-598 - Distribution-Customer-Service & Info | - | - |
| 29 | 91 | 5918_DISCOTH | Accts 591-598 - Distribution-Customer-Other | 0.00223 | 0.00 |
| 30 | 92 | CACT_DISCMTRR | Cust Accts - Distribution-Customer-Meter Reading | 0.00029 | 0.00 |
| 31 | 93 | CACT_DISCBIL | Cust Accts - Distribution-Customer-Billing & Collections | 0.00029 | 0.00 |
| 32 | 94 | CACT_DISCINF | Cust Accts - Distribution-Customer-Service & Info | - | - |
| 33 | 95 | CACT_DISCOTH | Cust Accts - Distribution-Customer-Other | 0.00428 | 0.00 |
| 34 | 96 | LA_PROD | Labor - Production-Demand | 0.00856 | 0.01 |
| 35 | 97 | LA_PROEF | Labor - Production-Energy-Fuel | - | - |
| 36 | 98 | LA_PROENF | Labor - Production-Energy-Non-Fuel | - | - |
| 37 | 99 | LA_STO_PRO_D | Labor - Storage-Production-Demand | - | - |
| 38 | 100 | LA_STO_TRA_D | Labor - Storage-Transmission-Demand | - | - |
| 39 | 101 | LA_STO_DIS_DSUB | Labor - Storage-Distribution-Demand-Subs | - | - |

This schedule is sponsored by PNM Witness Larkin

**PUBLIC SERVICE OF NEW MEXICO**
**Base Period Ending June 30th, 2026**

| Class_Factors Line No. | Factor No. | | | Schedule 30 Industrial Power | Schedule 33B Large Service |
|---|---|---|---|---|---|
| 1 | 63 | 5819_STO_DIS_DSEC | Accts 581-589 - Storage-Distribution-Demand-Secondary | - | - |
| 2 | 64 | 5819_TRAD | Accts 581-589 - Transmission-Demand | - | - |
| 3 | 65 | 5819_DISDSUB | Accts 581-589 - Distribution-Demand-Subs | 0.03839 | - |
| 4 | 66 | 5819_DISDPRI | Accts 581-589 - Distribution-Demand-Primary | - | - |
| 5 | 67 | 5819_DISDSEC | Accts 581-589 - Distribution-Demand-Secondary | - | - |
| 6 | 68 | 5819_DISCSRV | Accts 581-589 - Distribution-Customer-Services | - | - |
| 7 | 69 | 5819_DISCMTR | Accts 581-589 - Distribution-Customer-Meters | 0.00167 | 0.00024 |
| 8 | 70 | 5819_DISCMTRR | Accts 581-589 - Distribution-Customer-Meter Reading | - | - |
| 9 | 71 | 5819_DISCBIL | Accts 581-589 - Distribution-Customer-Billing & Collections | - | - |
| 10 | 72 | 5819_DISCINF | Accts 581-589 - Distribution-Customer-Service & Info | - | - |
| 11 | 73 | 5819_DISCOTH | Accts 581-589 - Distribution-Customer-Other | 0.00771 | 0.00004 |
| 12 | 74 | 5918_PROD | Accts 591-598 - Production-Demand | - | - |
| 13 | 75 | 5918_PROEF | Accts 591-598 - Production-Energy-Fuel | - | - |
| 14 | 76 | 5918_PROENF | Accts 591-598 - Production-Energy-Non-Fuel | - | - |
| 15 | 77 | 5918_STO_PRO_D | Accts 591-598 - Storage-Production-Demand | - | - |
| 16 | 78 | 5918_STO_TRA_D | Accts 591-598 - Storage-Transmission-Demand | - | - |
| 17 | 79 | 5918_STO_DIS_DSUB | Accts 591-598 - Storage-Distribution-Demand-Subs | - | - |
| 18 | 80 | 5918_STO_DIS_DPRI | Accts 591-598 - Storage-Distribution-Demand-Primary | - | - |
| 19 | 81 | 5918_STO_DIS_DSEC | Accts 591-598 - Storage-Distribution-Demand-Secondary | - | - |
| 20 | 82 | 5918_TRAD | Accts 591-598 - Transmission-Demand | - | - |
| 21 | 83 | 5918_DISDSUB | Accts 591-598 - Distribution-Demand-Subs | 0.03839 | - |
| 22 | 84 | 5918_DISDPRI | Accts 591-598 - Distribution-Demand-Primary | - | - |
| 23 | 85 | 5918_DISDSEC | Accts 591-598 - Distribution-Demand-Secondary | - | - |
| 24 | 86 | 5918_DISCSRV | Accts 591-598 - Distribution-Customer-Services | - | - |
| 25 | 87 | 5918_DISCMTR | Accts 591-598 - Distribution-Customer-Meters | 0.00167 | 0.00024 |
| 26 | 88 | 5918_DISCMTRR | Accts 591-598 - Distribution-Customer-Meter Reading | - | - |
| 27 | 89 | 5918_DISCBIL | Accts 591-598 - Distribution-Customer-Billing & Collections | - | - |
| 28 | 90 | 5918_DISCINF | Accts 591-598 - Distribution-Customer-Service & Info | - | - |
| 29 | 91 | 5918_DISCOTH | Accts 591-598 - Distribution-Customer-Other | 0.00771 | 0.00004 |
| 30 | 92 | CACT_DISCMTRR | Cust Accts - Distribution-Customer-Meter Reading | 0.00002 | 0.00000 |
| 31 | 93 | CACT_DISCBIL | Cust Accts - Distribution-Customer-Billing & Collections | 0.00002 | 0.00000 |
| 32 | 94 | CACT_DISCINF | Cust Accts - Distribution-Customer-Service & Info | - | - |
| 33 | 95 | CACT_DISCOTH | Cust Accts - Distribution-Customer-Other | 0.01478 | 0.00008 |
| 34 | 96 | LA_PROD | Labor - Production-Demand | 0.05053 | 0.00069 |
| 35 | 97 | LA_PROEF | Labor - Production-Energy-Fuel | - | - |
| 36 | 98 | LA_PROENF | Labor - Production-Energy-Non-Fuel | - | - |
| 37 | 99 | LA_STO_PRO_D | Labor - Storage-Production-Demand | - | - |
| 38 | 100 | LA_STO_TRA_D | Labor - Storage-Transmission-Demand | - | - |
| 39 | 101 | LA_STO_DIS_DSUB | Labor - Storage-Distribution-Demand-Subs | - | - |

**PUBLIC SERVICE OF NEW MEXICO**
**Base Period Ending June 30th, 2026**

| Line No. | Class_Factors Factor No. | | | Schedule 35B Lg Power Service | Schedule 36B Special Service Rate |
|---|---|---|---|---|---|
| 1 | 63 | 5819_STO_DIS_DSEC | Accts 581-589 - Storage-Distribution-Demand-Secondary | - | - |
| 2 | 64 | 5819_TRAD | Accts 581-589 - Transmission-Demand | - | - |
| 3 | 65 | 5819_DISDSUB | Accts 581-589 - Distribution-Demand-Subs | 0.01185 | - |
| 4 | 66 | 5819_DISDPRI | Accts 581-589 - Distribution-Demand-Primary | - | - |
| 5 | 67 | 5819_DISDSEC | Accts 581-589 - Distribution-Demand-Secondary | - | - |
| 6 | 68 | 5819_DISCSRV | Accts 581-589 - Distribution-Customer-Services | - | - |
| 7 | 69 | 5819_DISCMTR | Accts 581-589 - Distribution-Customer-Meters | 0.00083 | 0.00095 |
| 8 | 70 | 5819_DISCMTRR | Accts 581-589 - Distribution-Customer-Meter Reading | - | - |
| 9 | 71 | 5819_DISCBIL | Accts 581-589 - Distribution-Customer-Billing & Collections | - | - |
| 10 | 72 | 5819_DISCINF | Accts 581-589 - Distribution-Customer-Service & Info | - | - |
| 11 | 73 | 5819_DISCOTH | Accts 581-589 - Distribution-Customer-Other | 0.00191 | 0.00537 |
| 12 | 74 | 5918_PROD | Accts 591-598 - Production-Demand | - | - |
| 13 | 75 | 5918_PROEF | Accts 591-598 - Production-Energy-Fuel | - | - |
| 14 | 76 | 5918_PROENF | Accts 591-598 - Production-Energy-Non-Fuel | - | - |
| 15 | 77 | 5918_STO_PRO_D | Accts 591-598 - Storage-Production-Demand | - | - |
| 16 | 78 | 5918_STO_TRA_D | Accts 591-598 - Storage-Transmission-Demand | - | - |
| 17 | 79 | 5918_STO_DIS_DSUB | Accts 591-598 - Storage-Distribution-Demand-Subs | - | - |
| 18 | 80 | 5918_STO_DIS_DPRI | Accts 591-598 - Storage-Distribution-Demand-Primary | - | - |
| 19 | 81 | 5918_STO_DIS_DSEC | Accts 591-598 - Storage-Distribution-Demand-Secondary | - | - |
| 20 | 82 | 5918_TRAD | Accts 591-598 - Transmission-Demand | - | - |
| 21 | 83 | 5918_DISDSUB | Accts 591-598 - Distribution-Demand-Subs | 0.01185 | - |
| 22 | 84 | 5918_DISDPRI | Accts 591-598 - Distribution-Demand-Primary | - | - |
| 23 | 85 | 5918_DISDSEC | Accts 591-598 - Distribution-Demand-Secondary | - | - |
| 24 | 86 | 5918_DISCSRV | Accts 591-598 - Distribution-Customer-Services | - | - |
| 25 | 87 | 5918_DISCMTR | Accts 591-598 - Distribution-Customer-Meters | 0.00083 | 0.00095 |
| 26 | 88 | 5918_DISCMTRR | Accts 591-598 - Distribution-Customer-Meter Reading | - | - |
| 27 | 89 | 5918_DISCBIL | Accts 591-598 - Distribution-Customer-Billing & Collections | - | - |
| 28 | 90 | 5918_DISCINF | Accts 591-598 - Distribution-Customer-Service & Info | - | - |
| 29 | 91 | 5918_DISCOTH | Accts 591-598 - Distribution-Customer-Other | 0.00191 | 0.00537 |
| 30 | 92 | CACT_DISCMTRR | Cust Accts - Distribution-Customer-Meter Reading | 0.00001 | 0.00001 |
| 31 | 93 | CACT_DISCBIL | Cust Accts - Distribution-Customer-Billing & Collections | 0.00001 | 0.00001 |
| 32 | 94 | CACT_DISCINF | Cust Accts - Distribution-Customer-Service & Info | - | - |
| 33 | 95 | CACT_DISCOTH | Cust Accts - Distribution-Customer-Other | 0.00367 | 0.01029 |
| 34 | 96 | LA_PROD | Labor - Production-Demand | 0.01400 | - |
| 35 | 97 | LA_PROEF | Labor - Production-Energy-Fuel | - | - |
| 36 | 98 | LA_PROENF | Labor - Production-Energy-Non-Fuel | - | - |
| 37 | 99 | LA_STO_PRO_D | Labor - Storage-Production-Demand | - | - |
| 38 | 100 | LA_STO_TRA_D | Labor - Storage-Transmission-Demand | - | - |
| 39 | 101 | LA_STO_DIS_DSUB | Labor - Storage-Distribution-Demand-Subs | - | - |

This schedule is sponsored by PNM Witness Larkin

**PUBLIC SERVICE OF NEW MEXICO**
**Base Period Ending June 30th, 2026**

| Class_Factors Line No. | Factor No. | | | Schedule 6 Priv. Area Light | Schedule 20 Streetlighting |
|---|---|---|---|---|---|
| 1 | 63 | 5819_STO_DIS_DSEC | Accts 581-589 - Storage-Distribution-Demand-Secondary | - | - |
| 2 | 64 | 5819_TRAD | Accts 581-589 - Transmission-Demand | - | - |
| 3 | 65 | 5819_DISDSUB | Accts 581-589 - Distribution-Demand-Subs | 0.00183 | 0.00627 |
| 4 | 66 | 5819_DISDPRI | Accts 581-589 - Distribution-Demand-Primary | 0.00193 | 0.00660 |
| 5 | 67 | 5819_DISDSEC | Accts 581-589 - Distribution-Demand-Secondary | 0.00213 | 0.00730 |
| 6 | 68 | 5819_DISCSRV | Accts 581-589 - Distribution-Customer-Services | - | - |
| 7 | 69 | 5819_DISCMTR | Accts 581-589 - Distribution-Customer-Meters | - | - |
| 8 | 70 | 5819_DISCMTRR | Accts 581-589 - Distribution-Customer-Meter Reading | - | - |
| 9 | 71 | 5819_DISCBIL | Accts 581-589 - Distribution-Customer-Billing & Collections | - | - |
| 10 | 72 | 5819_DISCINF | Accts 581-589 - Distribution-Customer-Service & Info | - | - |
| 11 | 73 | 5819_DISCOTH | Accts 581-589 - Distribution-Customer-Other | 0.01733 | 0.46172 |
| 12 | 74 | 5918_PROD | Accts 591-598 - Production-Demand | - | - |
| 13 | 75 | 5918_PROEF | Accts 591-598 - Production-Energy-Fuel | - | - |
| 14 | 76 | 5918_PROENF | Accts 591-598 - Production-Energy-Non-Fuel | - | - |
| 15 | 77 | 5918_STO_PRO_D | Accts 591-598 - Storage-Production-Demand | - | - |
| 16 | 78 | 5918_STO_TRA_D | Accts 591-598 - Storage-Transmission-Demand | - | - |
| 17 | 79 | 5918_STO_DIS_DSUB | Accts 591-598 - Storage-Distribution-Demand-Subs | - | - |
| 18 | 80 | 5918_STO_DIS_DPRI | Accts 591-598 - Storage-Distribution-Demand-Primary | - | - |
| 19 | 81 | 5918_STO_DIS_DSEC | Accts 591-598 - Storage-Distribution-Demand-Secondary | - | - |
| 20 | 82 | 5918_TRAD | Accts 591-598 - Transmission-Demand | - | - |
| 21 | 83 | 5918_DISDSUB | Accts 591-598 - Distribution-Demand-Subs | 0.00183 | 0.00627 |
| 22 | 84 | 5918_DISDPRI | Accts 591-598 - Distribution-Demand-Primary | 0.00193 | 0.00660 |
| 23 | 85 | 5918_DISDSEC | Accts 591-598 - Distribution-Demand-Secondary | 0.00213 | 0.00730 |
| 24 | 86 | 5918_DISCSRV | Accts 591-598 - Distribution-Customer-Services | - | - |
| 25 | 87 | 5918_DISCMTR | Accts 591-598 - Distribution-Customer-Meters | - | - |
| 26 | 88 | 5918_DISCMTRR | Accts 591-598 - Distribution-Customer-Meter Reading | - | - |
| 27 | 89 | 5918_DISCBIL | Accts 591-598 - Distribution-Customer-Billing & Collections | - | - |
| 28 | 90 | 5918_DISCINF | Accts 591-598 - Distribution-Customer-Service & Info | - | - |
| 29 | 91 | 5918_DISCOTH | Accts 591-598 - Distribution-Customer-Other | 0.01733 | 0.46172 |
| 30 | 92 | CACT_DISCMTRR | Cust Accts - Distribution-Customer-Meter Reading | - | - |
| 31 | 93 | CACT_DISCBIL | Cust Accts - Distribution-Customer-Billing & Collections | - | - |
| 32 | 94 | CACT_DISCINF | Cust Accts - Distribution-Customer-Service & Info | - | - |
| 33 | 95 | CACT_DISCOTH | Cust Accts - Distribution-Customer-Other | 0.00027 | 0.00073 |
| 34 | 96 | LA_PROD | Labor - Production-Demand | 0.00037 | 0.00100 |
| 35 | 97 | LA_PROEF | Labor - Production-Energy-Fuel | - | - |
| 36 | 98 | LA_PROENF | Labor - Production-Energy-Non-Fuel | - | - |
| 37 | 99 | LA_STO_PRO_D | Labor - Storage-Production-Demand | - | - |
| 38 | 100 | LA_STO_TRA_D | Labor - Storage-Transmission-Demand | - | - |
| 39 | 101 | LA_STO_DIS_DSUB | Labor - Storage-Distribution-Demand-Subs | - | - |

This schedule is sponsored by PNM Witness Larkin

**PUBLIC SERVICE OF NEW MEXICO**
**Base Period Ending June 30th, 2026**

| Line No. | Class_Factors Factor No. | | | dule 20-Customer O Streetlighting |
|---|---|---|---|---|
| 1 | 63 | 5819_STO_DIS_DSEC | Accts 581-589 - Storage-Distribution-Demand-Secondary | - |
| 2 | 64 | 5819_TRAD | Accts 581-589 - Transmission-Demand | - |
| 3 | 65 | 5819_DISDSUB | Accts 581-589 - Distribution-Demand-Subs | 0.00000 |
| 4 | 66 | 5819_DISDPRI | Accts 581-589 - Distribution-Demand-Primary | 0.00000 |
| 5 | 67 | 5819_DISDSEC | Accts 581-589 - Distribution-Demand-Secondary | 0.00000 |
| 6 | 68 | 5819_DISCSRV | Accts 581-589 - Distribution-Customer-Services | - |
| 7 | 69 | 5819_DISCMTR | Accts 581-589 - Distribution-Customer-Meters | - |
| 8 | 70 | 5819_DISCMTRR | Accts 581-589 - Distribution-Customer-Meter Reading | - |
| 9 | 71 | 5819_DISCBIL | Accts 581-589 - Distribution-Customer-Billing & Collections | - |
| 10 | 72 | 5819_DISCINF | Accts 581-589 - Distribution-Customer-Service & Info | - |
| 11 | 73 | 5819_DISCOTH | Accts 581-589 - Distribution-Customer-Other | 0.00000 |
| 12 | 74 | 5918_PROD | Accts 591-598 - Production-Demand | - |
| 13 | 75 | 5918_PROEF | Accts 591-598 - Production-Energy-Fuel | - |
| 14 | 76 | 5918_PROENF | Accts 591-598 - Production-Energy-Non-Fuel | - |
| 15 | 77 | 5918_STO_PRO_D | Accts 591-598 - Storage-Production-Demand | - |
| 16 | 78 | 5918_STO_TRA_D | Accts 591-598 - Storage-Transmission-Demand | - |
| 17 | 79 | 5918_STO_DIS_DSUB | Accts 591-598 - Storage-Distribution-Demand-Subs | - |
| 18 | 80 | 5918_STO_DIS_DPRI | Accts 591-598 - Storage-Distribution-Demand-Primary | - |
| 19 | 81 | 5918_STO_DIS_DSEC | Accts 591-598 - Storage-Distribution-Demand-Secondary | - |
| 20 | 82 | 5918_TRAD | Accts 591-598 - Transmission-Demand | - |
| 21 | 83 | 5918_DISDSUB | Accts 591-598 - Distribution-Demand-Subs | 0.00000 |
| 22 | 84 | 5918_DISDPRI | Accts 591-598 - Distribution-Demand-Primary | 0.00000 |
| 23 | 85 | 5918_DISDSEC | Accts 591-598 - Distribution-Demand-Secondary | 0.00000 |
| 24 | 86 | 5918_DISCSRV | Accts 591-598 - Distribution-Customer-Services | - |
| 25 | 87 | 5918_DISCMTR | Accts 591-598 - Distribution-Customer-Meters | - |
| 26 | 88 | 5918_DISCMTRR | Accts 591-598 - Distribution-Customer-Meter Reading | - |
| 27 | 89 | 5918_DISCBIL | Accts 591-598 - Distribution-Customer-Billing & Collections | - |
| 28 | 90 | 5918_DISCINF | Accts 591-598 - Distribution-Customer-Service & Info | - |
| 29 | 91 | 5918_DISCOTH | Accts 591-598 - Distribution-Customer-Other | 0.00000 |
| 30 | 92 | CACT_DISCMTRR | Cust Accts - Distribution-Customer-Meter Reading | - |
| 31 | 93 | CACT_DISCBIL | Cust Accts - Distribution-Customer-Billing & Collections | - |
| 32 | 94 | CACT_DISCINF | Cust Accts - Distribution-Customer-Service & Info | - |
| 33 | 95 | CACT_DISCOTH | Cust Accts - Distribution-Customer-Other | - |
| 34 | 96 | LA_PROD | Labor - Production-Demand | 0.00000 |
| 35 | 97 | LA_PROEF | Labor - Production-Energy-Fuel | - |
| 36 | 98 | LA_PROENF | Labor - Production-Energy-Non-Fuel | - |
| 37 | 99 | LA_STO_PRO_D | Labor - Storage-Production-Demand | - |
| 38 | 100 | LA_STO_TRA_D | Labor - Storage-Transmission-Demand | - |
| 39 | 101 | LA_STO_DIS_DSUB | Labor - Storage-Distribution-Demand-Subs | - |

This schedule is sponsored by PNM Witness Larkin

**PUBLIC SERVICE OF NEW MEXICO**
**Base Period Ending June 30th, 2026**

Class_Factors

| Line No. | Factor No. | | | Other Input |
|---|---|---|---|---|
| 40 | 102 | LA_STO_DIS_DPRI | Labor - Storage-Distribution-Demand-Primary | |
| 41 | 103 | LA_STO_DIS_DSEC | Labor - Storage-Distribution-Demand-Secondary | |
| 42 | 104 | LA_TRAD | Labor - Transmission-Demand | |
| 43 | 105 | LA_DISDSUB | Labor - Distribution-Demand-Subs | |
| 44 | 106 | LA_DISDPRI | Labor - Distribution-Demand-Primary | |
| 45 | 107 | LA_DISDSEC | Labor - Distribution-Demand-Secondary | |
| 46 | 108 | LA_DISCSRV | Labor - Distribution-Customer-Services | |
| 47 | 109 | LA_DISCMTR | Labor - Distribution-Customer-Meters | |
| 48 | 110 | LA_DISCMTRR | Labor - Distribution-Customer-Meter Reading | |
| 49 | 111 | LA_DISCBIL | Labor - Distribution-Customer-Billing & Collections | |
| 50 | 112 | LA_DISCINF | Labor - Distribution-Customer-Service & Info | |
| 51 | 113 | LA_DISCOTH | Labor - Distribution-Customer-Other | |
| 52 | 168 | RBASE_PROD | RBASE - Production-Demand | |
| 53 | 169 | RBASE_PROEF | RBASE - Production-Energy-Fuel | |
| 54 | 170 | RBASE_PROENF | RBASE - Production-Energy-Non-Fuel | |
| 55 | 171 | RBASE_STO_PRO_D | RBASE - Storage-Production-Demand | |
| 56 | 172 | RBASE_STO_TRA_D | RBASE - Storage-Transmission-Demand | |
| 57 | 173 | RBASE_STO_DIS_DSUB | RBASE - Storage-Distribution-Demand-Subs | |
| 58 | 174 | RBASE_STO_DIS_DPRI | RBASE - Storage-Distribution-Demand-Primary | |
| 59 | 175 | RBASE_STO_DIS_DSEC | RBASE - Storage-Distribution-Demand-Secondary | |
| 60 | 176 | RBASE_TRAD | RBASE - Transmission-Demand | |
| 61 | 177 | RBASE_DISDSUB | RBASE - Distribution-Demand-Subs | |
| 62 | 178 | RBASE_DISDPRI | RBASE - Distribution-Demand-Primary | |

**PUBLIC SERVICE OF NEW MEXICO**
**Base Period Ending June 30th, 2026**

| Class_Factors Line No. | Factor No. | | | Schedule 1 PNM Retail | Residential |
|---|---|---|---|---|---|
| 40 | 102 | LA_STO_DIS_DPRI | Labor - Storage-Distribution-Demand-Primary | - | - |
| 41 | 103 | LA_STO_DIS_DSEC | Labor - Storage-Distribution-Demand-Secondary | - | - |
| 42 | 104 | LA_TRAD | Labor - Transmission-Demand | 1.00000 | 0.43201 |
| 43 | 105 | LA_DISDSUB | Labor - Distribution-Demand-Subs | 1.00000 | 0.51204 |
| 44 | 106 | LA_DISDPRI | Labor - Distribution-Demand-Primary | 1.00000 | 0.53913 |
| 45 | 107 | LA_DISDSEC | Labor - Distribution-Demand-Secondary | 1.00000 | 0.59629 |
| 46 | 108 | LA_DISCSRV | Labor - Distribution-Customer-Services | 1.00000 | 0.91430 |
| 47 | 109 | LA_DISCMTR | Labor - Distribution-Customer-Meters | 1.00000 | 0.64381 |
| 48 | 110 | LA_DISCMTRR | Labor - Distribution-Customer-Meter Reading | 1.00000 | 0.89424 |
| 49 | 111 | LA_DISCBIL | Labor - Distribution-Customer-Billing & Collections | 1.00000 | 0.89424 |
| 50 | 112 | LA_DISCINF | Labor - Distribution-Customer-Service & Info | - | - |
| 51 | 113 | LA_DISCOTH | Labor - Distribution-Customer-Other | 1.00000 | 0.77295 |
| 52 | 168 | RBASE_PROD | RBASE - Production-Demand | 1.00000 | 0.50393 |
| 53 | 169 | RBASE_PROEF | RBASE - Production-Energy-Fuel | - | - |
| 54 | 170 | RBASE_PROENF | RBASE - Production-Energy-Non-Fuel | 1.00000 | 0.38568 |
| 55 | 171 | RBASE_STO_PRO_D | RBASE - Storage-Production-Demand | 1.00000 | 0.50393 |
| 56 | 172 | RBASE_STO_TRA_D | RBASE - Storage-Transmission-Demand | 1.00000 | 0.43201 |
| 57 | 173 | RBASE_STO_DIS_DSUB | RBASE - Storage-Distribution-Demand-Subs | 1.00000 | 0.51204 |
| 58 | 174 | RBASE_STO_DIS_DPRI | RBASE - Storage-Distribution-Demand-Primary | 1.00000 | 0.53913 |
| 59 | 175 | RBASE_STO_DIS_DSEC | RBASE - Storage-Distribution-Demand-Secondary | - | - |
| 60 | 176 | RBASE_TRAD | RBASE - Transmission-Demand | 1.00000 | 0.43201 |
| 61 | 177 | RBASE_DISDSUB | RBASE - Distribution-Demand-Subs | 1.00000 | 0.51204 |
| 62 | 178 | RBASE_DISDPRI | RBASE - Distribution-Demand-Primary | 1.00000 | 0.53913 |

**PUBLIC SERVICE OF NEW MEXICO**
**Base Period Ending June 30th, 2026**

| Class_Factors Line No. | Factor No. | | | Schedule 1B Residential | Schedule 2 Small Power |
|---|---|---|---|---|---|
| 40 | 102 | LA_STO_DIS_DPRI | Labor - Storage-Distribution-Demand-Primary | - | - |
| 41 | 103 | LA_STO_DIS_DSEC | Labor - Storage-Distribution-Demand-Secondary | - | - |
| 42 | 104 | LA_TRAD | Labor - Transmission-Demand | 0.00000 | 0.09969 |
| 43 | 105 | LA_DISDSUB | Labor - Distribution-Demand-Subs | 0.00000 | 0.12370 |
| 44 | 106 | LA_DISDPRI | Labor - Distribution-Demand-Primary | 0.00000 | 0.13024 |
| 45 | 107 | LA_DISDSEC | Labor - Distribution-Demand-Secondary | 0.00000 | 0.14405 |
| 46 | 108 | LA_DISCSRV | Labor - Distribution-Customer-Services | 0.00000 | 0.08570 |
| 47 | 109 | LA_DISCMTR | Labor - Distribution-Customer-Meters | 0.00000 | 0.20874 |
| 48 | 110 | LA_DISCMTRR | Labor - Distribution-Customer-Meter Reading | - | 0.09685 |
| 49 | 111 | LA_DISCBIL | Labor - Distribution-Customer-Billing & Collections | - | 0.09685 |
| 50 | 112 | LA_DISCINF | Labor - Distribution-Customer-Service & Info | - | - |
| 51 | 113 | LA_DISCOTH | Labor - Distribution-Customer-Other | 0.00000 | 0.09779 |
| 52 | 168 | RBASE_PROD | RBASE - Production-Demand | (0.00000) | 0.11338 |
| 53 | 169 | RBASE_PROEF | RBASE - Production-Energy-Fuel | - | - |
| 54 | 170 | RBASE_PROENF | RBASE - Production-Energy-Non-Fuel | - | 0.11395 |
| 55 | 171 | RBASE_STO_PRO_D | RBASE - Storage-Production-Demand | (0.00000) | 0.11338 |
| 56 | 172 | RBASE_STO_TRA_D | RBASE - Storage-Transmission-Demand | (0.00000) | 0.09969 |
| 57 | 173 | RBASE_STO_DIS_DSUB | RBASE - Storage-Distribution-Demand-Subs | (0.00000) | 0.12370 |
| 58 | 174 | RBASE_STO_DIS_DPRI | RBASE - Storage-Distribution-Demand-Primary | (0.00000) | 0.13024 |
| 59 | 175 | RBASE_STO_DIS_DSEC | RBASE - Storage-Distribution-Demand-Secondary | - | - |
| 60 | 176 | RBASE_TRAD | RBASE - Transmission-Demand | (0.00000) | 0.09969 |
| 61 | 177 | RBASE_DISDSUB | RBASE - Distribution-Demand-Subs | 0.00000 | 0.12370 |
| 62 | 178 | RBASE_DISDPRI | RBASE - Distribution-Demand-Primary | 0.00000 | 0.13024 |

**PUBLIC SERVICE OF NEW MEXICO**
**Base Period Ending June 30th, 2026**

| Class_Factors Line No. | Factor No. | | | Schedule 2B Small Power | Schedule 3B General Power |
|---|---|---|---|---|---|
| 40 | 102 | LA_STO_DIS_DPRI | Labor - Storage-Distribution-Demand-Primary | - | - |
| 41 | 103 | LA_STO_DIS_DSEC | Labor - Storage-Distribution-Demand-Secondary | - | - |
| 42 | 104 | LA_TRAD | Labor - Transmission-Demand | 0.00000 | 0.14784 |
| 43 | 105 | LA_DISDSUB | Labor - Distribution-Demand-Subs | 0.00000 | 0.14987 |
| 44 | 106 | LA_DISDPRI | Labor - Distribution-Demand-Primary | 0.00000 | 0.15780 |
| 45 | 107 | LA_DISDSEC | Labor - Distribution-Demand-Secondary | 0.00000 | 0.17453 |
| 46 | 108 | LA_DISCSRV | Labor - Distribution-Customer-Services | 0.00000 | - |
| 47 | 109 | LA_DISCMTR | Labor - Distribution-Customer-Meters | 0.00000 | 0.06274 |
| 48 | 110 | LA_DISCMTRR | Labor - Distribution-Customer-Meter Reading | - | 0.00502 |
| 49 | 111 | LA_DISCBIL | Labor - Distribution-Customer-Billing & Collections | - | 0.00502 |
| 50 | 112 | LA_DISCINF | Labor - Distribution-Customer-Service & Info | - | - |
| 51 | 113 | LA_DISCOTH | Labor - Distribution-Customer-Other | 0.00000 | 0.03639 |
| 52 | 168 | RBASE_PROD | RBASE - Production-Demand | (0.00000) | 0.16519 |
| 53 | 169 | RBASE_PROEF | RBASE - Production-Energy-Fuel | - | - |
| 54 | 170 | RBASE_PROENF | RBASE - Production-Energy-Non-Fuel | - | 0.16647 |
| 55 | 171 | RBASE_STO_PRO_D | RBASE - Storage-Production-Demand | (0.00000) | 0.16519 |
| 56 | 172 | RBASE_STO_TRA_D | RBASE - Storage-Transmission-Demand | (0.00000) | 0.14784 |
| 57 | 173 | RBASE_STO_DIS_DSUB | RBASE - Storage-Distribution-Demand-Subs | (0.00000) | 0.14987 |
| 58 | 174 | RBASE_STO_DIS_DPRI | RBASE - Storage-Distribution-Demand-Primary | (0.00000) | 0.15780 |
| 59 | 175 | RBASE_STO_DIS_DSEC | RBASE - Storage-Distribution-Demand-Secondary | - | - |
| 60 | 176 | RBASE_TRAD | RBASE - Transmission-Demand | (0.00000) | 0.14784 |
| 61 | 177 | RBASE_DISDSUB | RBASE - Distribution-Demand-Subs | 0.00000 | 0.14987 |
| 62 | 178 | RBASE_DISDPRI | RBASE - Distribution-Demand-Primary | 0.00000 | 0.15780 |

**PUBLIC SERVICE OF NEW MEXICO**
**Base Period Ending June 30th, 2026**

| Class_Factors Line No. | Factor No. | | | Schedule 3C GP Low LF | Schedule 3D General Power Gov |
|---|---|---|---|---|---|
| 40 | 102 | LA_STO_DIS_DPRI | Labor - Storage-Distribution-Demand-Primary | - | - |
| 41 | 103 | LA_STO_DIS_DSEC | Labor - Storage-Distribution-Demand-Secondary | - | - |
| 42 | 104 | LA_TRAD | Labor - Transmission-Demand | 0.02995 | 0.01015 |
| 43 | 105 | LA_DISDSUB | Labor - Distribution-Demand-Subs | 0.04594 | 0.01006 |
| 44 | 106 | LA_DISDPRI | Labor - Distribution-Demand-Primary | 0.04837 | 0.01060 |
| 45 | 107 | LA_DISDSEC | Labor - Distribution-Demand-Secondary | 0.05349 | 0.01172 |
| 46 | 108 | LA_DISCSRV | Labor - Distribution-Customer-Services | - | - |
| 47 | 109 | LA_DISCMTR | Labor - Distribution-Customer-Meters | 0.02751 | 0.00388 |
| 48 | 110 | LA_DISCMTRR | Labor - Distribution-Customer-Meter Reading | 0.00220 | 0.00031 |
| 49 | 111 | LA_DISCBIL | Labor - Distribution-Customer-Billing & Collections | 0.00220 | 0.00031 |
| 50 | 112 | LA_DISCINF | Labor - Distribution-Customer-Service & Info | - | - |
| 51 | 113 | LA_DISCOTH | Labor - Distribution-Customer-Other | 0.00908 | 0.00257 |
| 52 | 168 | RBASE_PROD | RBASE - Production-Demand | 0.03486 | 0.01121 |
| 53 | 169 | RBASE_PROEF | RBASE - Production-Energy-Fuel | - | - |
| 54 | 170 | RBASE_PROENF | RBASE - Production-Energy-Non-Fuel | 0.03773 | 0.01192 |
| 55 | 171 | RBASE_STO_PRO_D | RBASE - Storage-Production-Demand | 0.03486 | 0.01121 |
| 56 | 172 | RBASE_STO_TRA_D | RBASE - Storage-Transmission-Demand | 0.02995 | 0.01015 |
| 57 | 173 | RBASE_STO_DIS_DSUB | RBASE - Storage-Distribution-Demand-Subs | 0.04594 | 0.01006 |
| 58 | 174 | RBASE_STO_DIS_DPRI | RBASE - Storage-Distribution-Demand-Primary | 0.04837 | 0.01060 |
| 59 | 175 | RBASE_STO_DIS_DSEC | RBASE - Storage-Distribution-Demand-Secondary | - | - |
| 60 | 176 | RBASE_TRAD | RBASE - Transmission-Demand | 0.02995 | 0.01015 |
| 61 | 177 | RBASE_DISDSUB | RBASE - Distribution-Demand-Subs | 0.04594 | 0.01006 |
| 62 | 178 | RBASE_DISDPRI | RBASE - Distribution-Demand-Primary | 0.04837 | 0.01060 |

**PUBLIC SERVICE OF NEW MEXICO**
**Base Period Ending June 30th, 2026**

| Class_Factors Line No. | Factor No. | | | Schedule 3E GP Low LF Gov |
|---|---|---|---|---|
| 40 | 102 | LA_STO_DIS_DPRI | Labor - Storage-Distribution-Demand-Primary | - |
| 41 | 103 | LA_STO_DIS_DSEC | Labor - Storage-Distribution-Demand-Secondary | - |
| 42 | 104 | LA_TRAD | Labor - Transmission-Demand | 0.00241 |
| 43 | 105 | LA_DISDSUB | Labor - Distribution-Demand-Subs | 0.00412 |
| 44 | 106 | LA_DISDPRI | Labor - Distribution-Demand-Primary | 0.00434 |
| 45 | 107 | LA_DISDSEC | Labor - Distribution-Demand-Secondary | 0.00480 |
| 46 | 108 | LA_DISCSRV | Labor - Distribution-Customer-Services | - |
| 47 | 109 | LA_DISCMTR | Labor - Distribution-Customer-Meters | 0.00161 |
| 48 | 110 | LA_DISCMTRR | Labor - Distribution-Customer-Meter Reading | 0.00013 |
| 49 | 111 | LA_DISCBIL | Labor - Distribution-Customer-Billing & Collections | 0.00013 |
| 50 | 112 | LA_DISCINF | Labor - Distribution-Customer-Service & Info | - |
| 51 | 113 | LA_DISCOTH | Labor - Distribution-Customer-Other | 0.00065 |
| 52 | 168 | RBASE_PROD | RBASE - Production-Demand | 0.00287 |
| 53 | 169 | RBASE_PROEF | RBASE - Production-Energy-Fuel | - |
| 54 | 170 | RBASE_PROENF | RBASE - Production-Energy-Non-Fuel | 0.00281 |
| 55 | 171 | RBASE_STO_PRO_D | RBASE - Storage-Production-Demand | 0.00287 |
| 56 | 172 | RBASE_STO_TRA_D | RBASE - Storage-Transmission-Demand | 0.00241 |
| 57 | 173 | RBASE_STO_DIS_DSUB | RBASE - Storage-Distribution-Demand-Subs | 0.00412 |
| 58 | 174 | RBASE_STO_DIS_DPRI | RBASE - Storage-Distribution-Demand-Primary | 0.00434 |
| 59 | 175 | RBASE_STO_DIS_DSEC | RBASE - Storage-Distribution-Demand-Secondary | - |
| 60 | 176 | RBASE_TRAD | RBASE - Transmission-Demand | 0.00241 |
| 61 | 177 | RBASE_DISDSUB | RBASE - Distribution-Demand-Subs | 0.00412 |
| 62 | 178 | RBASE_DISDPRI | RBASE - Distribution-Demand-Primary | 0.00434 |

**PUBLIC SERVICE OF NEW MEXICO**
**Base Period Ending June 30th, 2026**

| Class_Factors Line No. | Factor No. | | | Schedule 3F GP Charging Stations | Schedule 4 Large Power |
|---|---|---|---|---|---|
| 40 | 102 | LA_STO_DIS_DPRI | Labor - Storage-Distribution-Demand-Primary | - | - |
| 41 | 103 | LA_STO_DIS_DSEC | Labor - Storage-Distribution-Demand-Secondary | - | - |
| 42 | 104 | LA_TRAD | Labor - Transmission-Demand | 0.00054 | 0.07353 |
| 43 | 105 | LA_DISDSUB | Labor - Distribution-Demand-Subs | 0.00174 | 0.06821 |
| 44 | 106 | LA_DISDPRI | Labor - Distribution-Demand-Primary | 0.00184 | 0.07182 |
| 45 | 107 | LA_DISDSEC | Labor - Distribution-Demand-Secondary | 0.00203 | - |
| 46 | 108 | LA_DISCSRV | Labor - Distribution-Customer-Services | - | - |
| 47 | 109 | LA_DISCMTR | Labor - Distribution-Customer-Meters | 0.00036 | 0.02084 |
| 48 | 110 | LA_DISCMTRR | Labor - Distribution-Customer-Meter Reading | 0.00003 | 0.00031 |
| 49 | 111 | LA_DISCBIL | Labor - Distribution-Customer-Billing & Collections | 0.00003 | 0.00031 |
| 50 | 112 | LA_DISCINF | Labor - Distribution-Customer-Service & Info | - | - |
| 51 | 113 | LA_DISCOTH | Labor - Distribution-Customer-Other | 0.00018 | 0.01962 |
| 52 | 168 | RBASE_PROD | RBASE - Production-Demand | 0.00070 | 0.08252 |
| 53 | 169 | RBASE_PROEF | RBASE - Production-Energy-Fuel | - | - |
| 54 | 170 | RBASE_PROENF | RBASE - Production-Energy-Non-Fuel | 0.00080 | 0.09932 |
| 55 | 171 | RBASE_STO_PRO_D | RBASE - Storage-Production-Demand | 0.00070 | 0.08252 |
| 56 | 172 | RBASE_STO_TRA_D | RBASE - Storage-Transmission-Demand | 0.00054 | 0.07353 |
| 57 | 173 | RBASE_STO_DIS_DSUB | RBASE - Storage-Distribution-Demand-Subs | 0.00174 | 0.06821 |
| 58 | 174 | RBASE_STO_DIS_DPRI | RBASE - Storage-Distribution-Demand-Primary | 0.00184 | 0.07182 |
| 59 | 175 | RBASE_STO_DIS_DSEC | RBASE - Storage-Distribution-Demand-Secondary | - | - |
| 60 | 176 | RBASE_TRAD | RBASE - Transmission-Demand | 0.00054 | 0.07353 |
| 61 | 177 | RBASE_DISDSUB | RBASE - Distribution-Demand-Subs | 0.00174 | 0.06821 |
| 62 | 178 | RBASE_DISDPRI | RBASE - Distribution-Demand-Primary | 0.00184 | 0.07182 |

**PUBLIC SERVICE OF NEW MEXICO**
**Base Period Ending June 30th, 2026**

| Class_Factors Line No. | Factor No. | | | Schedule 5 Industrial Power | Schedule 10 Irrigation |
|---|---|---|---|---|---|
| 40 | 102 | LA_STO_DIS_DPRI | Labor - Storage-Distribution-Demand-Primary | - | - |
| 41 | 103 | LA_STO_DIS_DSEC | Labor - Storage-Distribution-Demand-Secondary | - | - |
| 42 | 104 | LA_TRAD | Labor - Transmission-Demand | 0.00154 | 0.00201 |
| 43 | 105 | LA_DISDSUB | Labor - Distribution-Demand-Subs | - | 0.00313 |
| 44 | 106 | LA_DISDPRI | Labor - Distribution-Demand-Primary | - | 0.00330 |
| 45 | 107 | LA_DISDSEC | Labor - Distribution-Demand-Secondary | - | 0.00365 |
| 46 | 108 | LA_DISCSRV | Labor - Distribution-Customer-Services | - | - |
| 47 | 109 | LA_DISCMTR | Labor - Distribution-Customer-Meters | 0.00012 | 0.00705 |
| 48 | 110 | LA_DISCMTRR | Labor - Distribution-Customer-Meter Reading | 0.00000 | 0.00056 |
| 49 | 111 | LA_DISCBIL | Labor - Distribution-Customer-Billing & Collections | 0.00000 | 0.00056 |
| 50 | 112 | LA_DISCINF | Labor - Distribution-Customer-Service & Info | - | - |
| 51 | 113 | LA_DISCOTH | Labor - Distribution-Customer-Other | 0.00027 | 0.00098 |
| 52 | 168 | RBASE_PROD | RBASE - Production-Demand | 0.00173 | 0.00235 |
| 53 | 169 | RBASE_PROEF | RBASE - Production-Energy-Fuel | - | - |
| 54 | 170 | RBASE_PROENF | RBASE - Production-Energy-Non-Fuel | 0.00139 | 0.00275 |
| 55 | 171 | RBASE_STO_PRO_D | RBASE - Storage-Production-Demand | 0.00173 | 0.00235 |
| 56 | 172 | RBASE_STO_TRA_D | RBASE - Storage-Transmission-Demand | 0.00154 | 0.00201 |
| 57 | 173 | RBASE_STO_DIS_DSUB | RBASE - Storage-Distribution-Demand-Subs | - | 0.00313 |
| 58 | 174 | RBASE_STO_DIS_DPRI | RBASE - Storage-Distribution-Demand-Primary | - | 0.00330 |
| 59 | 175 | RBASE_STO_DIS_DSEC | RBASE - Storage-Distribution-Demand-Secondary | - | - |
| 60 | 176 | RBASE_TRAD | RBASE - Transmission-Demand | 0.00154 | 0.00201 |
| 61 | 177 | RBASE_DISDSUB | RBASE - Distribution-Demand-Subs | - | 0.00313 |
| 62 | 178 | RBASE_DISDPRI | RBASE - Distribution-Demand-Primary | - | 0.00330 |

**PUBLIC SERVICE OF NEW MEXICO**
**Base Period Ending June 30th, 2026**

| Class_Factors Line No. | Factor No. | | | Schedule 11 Water & Sewage | Schedule 15 Industrial Power |
|---|---|---|---|---|---|
| 40 | 102 | LA_STO_DIS_DPRI | Labor - Storage-Distribution-Demand-Primary | - | - |
| 41 | 103 | LA_STO_DIS_DSEC | Labor - Storage-Distribution-Demand-Secondary | - | - |
| 42 | 104 | LA_TRAD | Labor - Transmission-Demand | 0.00926 | 0.01 |
| 43 | 105 | LA_DISDSUB | Labor - Distribution-Demand-Subs | 0.02284 | - |
| 44 | 106 | LA_DISDPRI | Labor - Distribution-Demand-Primary | 0.02405 | - |
| 45 | 107 | LA_DISDSEC | Labor - Distribution-Demand-Secondary | - | - |
| 46 | 108 | LA_DISCSRV | Labor - Distribution-Customer-Services | - | - |
| 47 | 109 | LA_DISCMTR | Labor - Distribution-Customer-Meters | 0.01917 | 0.00 |
| 48 | 110 | LA_DISCMTRR | Labor - Distribution-Customer-Meter Reading | 0.00029 | 0.00 |
| 49 | 111 | LA_DISCBIL | Labor - Distribution-Customer-Billing & Collections | 0.00029 | 0.00 |
| 50 | 112 | LA_DISCINF | Labor - Distribution-Customer-Service & Info | - | - |
| 51 | 113 | LA_DISCOTH | Labor - Distribution-Customer-Other | 0.00417 | 0.00 |
| 52 | 168 | RBASE_PROD | RBASE - Production-Demand | 0.00856 | 0.01 |
| 53 | 169 | RBASE_PROEF | RBASE - Production-Energy-Fuel | - | - |
| 54 | 170 | RBASE_PROENF | RBASE - Production-Energy-Non-Fuel | 0.02025 | 0.01 |
| 55 | 171 | RBASE_STO_PRO_D | RBASE - Storage-Production-Demand | 0.00856 | 0.01 |
| 56 | 172 | RBASE_STO_TRA_D | RBASE - Storage-Transmission-Demand | 0.00926 | 0.01 |
| 57 | 173 | RBASE_STO_DIS_DSUB | RBASE - Storage-Distribution-Demand-Subs | 0.02284 | - |
| 58 | 174 | RBASE_STO_DIS_DPRI | RBASE - Storage-Distribution-Demand-Primary | 0.02405 | - |
| 59 | 175 | RBASE_STO_DIS_DSEC | RBASE - Storage-Distribution-Demand-Secondary | - | - |
| 60 | 176 | RBASE_TRAD | RBASE - Transmission-Demand | 0.00926 | 0.01 |
| 61 | 177 | RBASE_DISDSUB | RBASE - Distribution-Demand-Subs | 0.02284 | - |
| 62 | 178 | RBASE_DISDPRI | RBASE - Distribution-Demand-Primary | 0.02405 | - |

**PUBLIC SERVICE OF NEW MEXICO**
**Base Period Ending June 30th, 2026**

| Class_Factors Line No. | Factor No. | | | Schedule 30 Industrial Power | Schedule 33B Large Service |
|---|---|---|---|---|---|
| 40 | 102 | LA_STO_DIS_DPRI | Labor - Storage-Distribution-Demand-Primary | - | - |
| 41 | 103 | LA_STO_DIS_DSEC | Labor - Storage-Distribution-Demand-Secondary | - | - |
| 42 | 104 | LA_TRAD | Labor - Transmission-Demand | 0.04483 | 0.00065 |
| 43 | 105 | LA_DISDSUB | Labor - Distribution-Demand-Subs | 0.03839 | - |
| 44 | 106 | LA_DISDPRI | Labor - Distribution-Demand-Primary | - | - |
| 45 | 107 | LA_DISDSEC | Labor - Distribution-Demand-Secondary | - | - |
| 46 | 108 | LA_DISCSRV | Labor - Distribution-Customer-Services | - | - |
| 47 | 109 | LA_DISCMTR | Labor - Distribution-Customer-Meters | 0.00167 | 0.00024 |
| 48 | 110 | LA_DISCMTRR | Labor - Distribution-Customer-Meter Reading | 0.00002 | 0.00000 |
| 49 | 111 | LA_DISCBIL | Labor - Distribution-Customer-Billing & Collections | 0.00002 | 0.00000 |
| 50 | 112 | LA_DISCINF | Labor - Distribution-Customer-Service & Info | - | - |
| 51 | 113 | LA_DISCOTH | Labor - Distribution-Customer-Other | 0.01442 | 0.00007 |
| 52 | 168 | RBASE_PROD | RBASE - Production-Demand | 0.05053 | 0.00069 |
| 53 | 169 | RBASE_PROEF | RBASE - Production-Energy-Fuel | - | - |
| 54 | 170 | RBASE_PROENF | RBASE - Production-Energy-Non-Fuel | 0.07382 | 0.00037 |
| 55 | 171 | RBASE_STO_PRO_D | RBASE - Storage-Production-Demand | 0.05053 | 0.00069 |
| 56 | 172 | RBASE_STO_TRA_D | RBASE - Storage-Transmission-Demand | 0.04483 | 0.00065 |
| 57 | 173 | RBASE_STO_DIS_DSUB | RBASE - Storage-Distribution-Demand-Subs | 0.03839 | - |
| 58 | 174 | RBASE_STO_DIS_DPRI | RBASE - Storage-Distribution-Demand-Primary | - | - |
| 59 | 175 | RBASE_STO_DIS_DSEC | RBASE - Storage-Distribution-Demand-Secondary | - | - |
| 60 | 176 | RBASE_TRAD | RBASE - Transmission-Demand | 0.04483 | 0.00065 |
| 61 | 177 | RBASE_DISDSUB | RBASE - Distribution-Demand-Subs | 0.03839 | - |
| 62 | 178 | RBASE_DISDPRI | RBASE - Distribution-Demand-Primary | - | - |

**PUBLIC SERVICE OF NEW MEXICO**
**Base Period Ending June 30th, 2026**

| Class_Factors Line No. | Factor No. | | | Schedule 35B Lg Power Service | Schedule 36B Special Service Rate |
|---|---|---|---|---|---|
| 40 | 102 | LA_STO_DIS_DPRI | Labor - Storage-Distribution-Demand-Primary | - | - |
| 41 | 103 | LA_STO_DIS_DSEC | Labor - Storage-Distribution-Demand-Secondary | - | - |
| 42 | 104 | LA_TRAD | Labor - Transmission-Demand | 0.01197 | 0.12500 |
| 43 | 105 | LA_DISDSUB | Labor - Distribution-Demand-Subs | 0.01185 | - |
| 44 | 106 | LA_DISDPRI | Labor - Distribution-Demand-Primary | - | - |
| 45 | 107 | LA_DISDSEC | Labor - Distribution-Demand-Secondary | - | - |
| 46 | 108 | LA_DISCSRV | Labor - Distribution-Customer-Services | - | - |
| 47 | 109 | LA_DISCMTR | Labor - Distribution-Customer-Meters | 0.00083 | 0.00095 |
| 48 | 110 | LA_DISCMTRR | Labor - Distribution-Customer-Meter Reading | 0.00001 | 0.00001 |
| 49 | 111 | LA_DISCBIL | Labor - Distribution-Customer-Billing & Collections | 0.00001 | 0.00001 |
| 50 | 112 | LA_DISCINF | Labor - Distribution-Customer-Service & Info | - | - |
| 51 | 113 | LA_DISCOTH | Labor - Distribution-Customer-Other | 0.00358 | 0.01004 |
| 52 | 168 | RBASE_PROD | RBASE - Production-Demand | 0.01400 | - |
| 53 | 169 | RBASE_PROEF | RBASE - Production-Energy-Fuel | - | - |
| 54 | 170 | RBASE_PROENF | RBASE - Production-Energy-Non-Fuel | 0.01828 | 0.05140 |
| 55 | 171 | RBASE_STO_PRO_D | RBASE - Storage-Production-Demand | 0.01400 | - |
| 56 | 172 | RBASE_STO_TRA_D | RBASE - Storage-Transmission-Demand | 0.01197 | 0.12500 |
| 57 | 173 | RBASE_STO_DIS_DSUB | RBASE - Storage-Distribution-Demand-Subs | 0.01185 | - |
| 58 | 174 | RBASE_STO_DIS_DPRI | RBASE - Storage-Distribution-Demand-Primary | - | - |
| 59 | 175 | RBASE_STO_DIS_DSEC | RBASE - Storage-Distribution-Demand-Secondary | - | - |
| 60 | 176 | RBASE_TRAD | RBASE - Transmission-Demand | 0.01197 | 0.12500 |
| 61 | 177 | RBASE_DISDSUB | RBASE - Distribution-Demand-Subs | 0.01185 | - |
| 62 | 178 | RBASE_DISDPRI | RBASE - Distribution-Demand-Primary | - | - |

**PUBLIC SERVICE OF NEW MEXICO**
**Base Period Ending June 30th, 2026**

| Class_Factors Line No. | Factor No. | | | Schedule 6 Priv. Area Light | Schedule 20 Streetlighting |
|---|---|---|---|---|---|
| 40 | 102 | LA_STO_DIS_DPRI | Labor - Storage-Distribution-Demand-Primary | - | - |
| 41 | 103 | LA_STO_DIS_DSEC | Labor - Storage-Distribution-Demand-Secondary | - | - |
| 42 | 104 | LA_TRAD | Labor - Transmission-Demand | 0.00088 | 0.00232 |
| 43 | 105 | LA_DISDSUB | Labor - Distribution-Demand-Subs | 0.00183 | 0.00627 |
| 44 | 106 | LA_DISDPRI | Labor - Distribution-Demand-Primary | 0.00193 | 0.00660 |
| 45 | 107 | LA_DISDSEC | Labor - Distribution-Demand-Secondary | 0.00213 | 0.00730 |
| 46 | 108 | LA_DISCSRV | Labor - Distribution-Customer-Services | - | - |
| 47 | 109 | LA_DISCMTR | Labor - Distribution-Customer-Meters | - | - |
| 48 | 110 | LA_DISCMTRR | Labor - Distribution-Customer-Meter Reading | - | - |
| 49 | 111 | LA_DISCBIL | Labor - Distribution-Customer-Billing & Collections | - | - |
| 50 | 112 | LA_DISCINF | Labor - Distribution-Customer-Service & Info | - | - |
| 51 | 113 | LA_DISCOTH | Labor - Distribution-Customer-Other | 0.00555 | 0.02013 |
| 52 | 168 | RBASE_PROD | RBASE - Production-Demand | 0.00037 | 0.00100 |
| 53 | 169 | RBASE_PROEF | RBASE - Production-Energy-Fuel | - | - |
| 54 | 170 | RBASE_PROENF | RBASE - Production-Energy-Non-Fuel | 0.00136 | 0.00367 |
| 55 | 171 | RBASE_STO_PRO_D | RBASE - Storage-Production-Demand | 0.00037 | 0.00100 |
| 56 | 172 | RBASE_STO_TRA_D | RBASE - Storage-Transmission-Demand | 0.00088 | 0.00232 |
| 57 | 173 | RBASE_STO_DIS_DSUB | RBASE - Storage-Distribution-Demand-Subs | 0.00183 | 0.00627 |
| 58 | 174 | RBASE_STO_DIS_DPRI | RBASE - Storage-Distribution-Demand-Primary | 0.00193 | 0.00660 |
| 59 | 175 | RBASE_STO_DIS_DSEC | RBASE - Storage-Distribution-Demand-Secondary | - | - |
| 60 | 176 | RBASE_TRAD | RBASE - Transmission-Demand | 0.00088 | 0.00232 |
| 61 | 177 | RBASE_DISDSUB | RBASE - Distribution-Demand-Subs | 0.00183 | 0.00627 |
| 62 | 178 | RBASE_DISDPRI | RBASE - Distribution-Demand-Primary | 0.00193 | 0.00660 |

**PUBLIC SERVICE OF NEW MEXICO**
**Base Period Ending June 30th, 2026**

| Line No. | Class_Factors Factor No. | | | dule 20-Customer O Streetlighting |
|---|---|---|---|---|
| 40 | 102 | LA_STO_DIS_DPRI | Labor - Storage-Distribution-Demand-Primary | - |
| 41 | 103 | LA_STO_DIS_DSEC | Labor - Storage-Distribution-Demand-Secondary | - |
| 42 | 104 | LA_TRAD | Labor - Transmission-Demand | 0.00000 |
| 43 | 105 | LA_DISDSUB | Labor - Distribution-Demand-Subs | 0.00000 |
| 44 | 106 | LA_DISDPRI | Labor - Distribution-Demand-Primary | 0.00000 |
| 45 | 107 | LA_DISDSEC | Labor - Distribution-Demand-Secondary | 0.00000 |
| 46 | 108 | LA_DISCSRV | Labor - Distribution-Customer-Services | - |
| 47 | 109 | LA_DISCMTR | Labor - Distribution-Customer-Meters | - |
| 48 | 110 | LA_DISCMTRR | Labor - Distribution-Customer-Meter Reading | - |
| 49 | 111 | LA_DISCBIL | Labor - Distribution-Customer-Billing & Collections | - |
| 50 | 112 | LA_DISCINF | Labor - Distribution-Customer-Service & Info | - |
| 51 | 113 | LA_DISCOTH | Labor - Distribution-Customer-Other | 0.00000 |
| 52 | 168 | RBASE_PROD | RBASE - Production-Demand | (0.00000) |
| 53 | 169 | RBASE_PROEF | RBASE - Production-Energy-Fuel | - |
| 54 | 170 | RBASE_PROENF | RBASE - Production-Energy-Non-Fuel | - |
| 55 | 171 | RBASE_STO_PRO_D | RBASE - Storage-Production-Demand | (0.00000) |
| 56 | 172 | RBASE_STO_TRA_D | RBASE - Storage-Transmission-Demand | (0.00000) |
| 57 | 173 | RBASE_STO_DIS_DSUB | RBASE - Storage-Distribution-Demand-Subs | (0.00000) |
| 58 | 174 | RBASE_STO_DIS_DPRI | RBASE - Storage-Distribution-Demand-Primary | (0.00000) |
| 59 | 175 | RBASE_STO_DIS_DSEC | RBASE - Storage-Distribution-Demand-Secondary | - |
| 60 | 176 | RBASE_TRAD | RBASE - Transmission-Demand | (0.00000) |
| 61 | 177 | RBASE_DISDSUB | RBASE - Distribution-Demand-Subs | 0.00000 |
| 62 | 178 | RBASE_DISDPRI | RBASE - Distribution-Demand-Primary | 0.00000 |

**PUBLIC SERVICE OF NEW MEXICO**
**Base Period Ending June 30th, 2026**

| Line No. | Class_Factors Factor No. | | | Other Input |
|---|---|---|---|---|
| 1 | 179 | RBASE_DISDSEC | RBASE - Distribution-Demand-Secondary | |
| 2 | 180 | RBASE_DISCSRV | RBASE - Distribution-Customer-Services | |
| 3 | 181 | RBASE_DISCMTR | RBASE - Distribution-Customer-Meters | |
| 4 | 182 | RBASE_DISCMTRR | RBASE - Distribution-Customer-Meter Reading | |
| 5 | 183 | RBASE_DISCBIL | RBASE - Distribution-Customer-Billing & Collections | |
| 6 | 184 | RBASE_DISCINF | RBASE - Distribution-Customer-Service & Info | |
| 7 | 185 | RBASE_DISCOTH | RBASE - Distribution-Customer-Other | |
| 8 | 186 | | | |
| 9 | 187 | | | |
| 10 | 188 | TOTAL_O&M_PROD | Total O&M Expense - Production-Demand | |
| 11 | 189 | TOTAL_O&M_PROEF | Total O&M Expense - Production-Energy-Fuel | |
| 12 | 190 | TOTAL_O&M_PROENF | Total O&M Expense - Production-Energy-Non-Fuel | |
| 13 | 191 | TOTAL_O&M_STO_PRO_D | Total O&M Expense - Storage-Production-Demand | |
| 14 | 192 | TOTAL_O&M_STO_TRA_D | Total O&M Expense - Storage-Transmission-Demand | |
| 15 | 193 | TOTAL_O&M_STO_DIS_DSUB | Total O&M Expense - Storage-Distribution-Demand-Subs | |
| 16 | 194 | TOTAL_O&M_STO_DIS_DPRI | Total O&M Expense - Storage-Distribution-Demand-Primary | |
| 17 | 195 | TOTAL_O&M_STO_DIS_DSEC | Total O&M Expense - Storage-Distribution-Demand-Secondary | |
| 18 | 196 | TOTAL_O&M_TRAD | Total O&M Expense - Transmission-Demand | |
| 19 | 197 | TOTAL_O&M_DISDSUB | Total O&M Expense - Distribution-Demand-Subs | |
| 20 | 198 | TOTAL_O&M_DISDPRI | Total O&M Expense - Distribution-Demand-Primary | |
| 21 | 199 | TOTAL_O&M_DISDSEC | Total O&M Expense - Distribution-Demand-Secondary | |
| 22 | 200 | TOTAL_O&M_DISCSRV | Total O&M Expense - Distribution-Customer-Services | |
| 23 | 201 | TOTAL_O&M_DISCMTR | Total O&M Expense - Distribution-Customer-Meters | |
| 24 | 202 | TOTAL_O&M_DISCMTRR | Total O&M Expense - Distribution-Customer-Meter Reading | |
| 25 | 203 | TOTAL_O&M_DISCBIL | Total O&M Expense - Distribution-Customer-Billing & Collections | |
| 26 | 204 | TOTAL_O&M_DISCINF | Total O&M Expense - Distribution-Customer-Service & Info | |
| 27 | 205 | TOTAL_O&M_DISCOTH | Total O&M Expense - Distribution-Customer-Other | |
| 28 | | | | |
| 29 | | **ALLOCATION DETERMINANT TABLES** | | |
| 30 | | **INDEPENDENT ALLOCATORS** | | |
| 31 | 1 | RH_DEMAND | Risk Hour Demand | |
| 32 | 2 | TRANS_12CP | Transmission Demand (based on 12CP) | |
| 33 | 3 | NCP | Max Non Coincident Peak | |
| 34 | 4 | NCP_SUBS | Max Non Coincident Peak - Substation Level | |
| 35 | 5 | NCP_PRI | Max Non Coincident Peak - Primary Level | |
| 36 | 6 | NCP_SEC | Max Non Coincident Peak - Secondary Level | |
| 37 | 7 | STORAGE_3S1W | 4CP Demand at Storage Dispatch Peak Hours | |
| 38 | 8 | AVGDEMAND | Average Demand | 8,760 |
| 39 | 9 | ENERGY | Energy - kWh at Generation (used for Base Fuel Items) | |

This schedule is sponsored by PNM Witness Larkin

**PUBLIC SERVICE OF NEW MEXICO**
**Base Period Ending June 30th, 2026**

| Class_Factors | | | | | Schedule 1 |
|---|---|---|---|---|---|
| Line No. | Factor No. | | | PNM Retail | Residential |
| 1 | 179 | RBASE_DISDSEC | RBASE - Distribution-Demand-Secondary | 1.00000 | 0.59629 |
| 2 | 180 | RBASE_DISCSRV | RBASE - Distribution-Customer-Services | 1.00000 | 0.91430 |
| 3 | 181 | RBASE_DISCMTR | RBASE - Distribution-Customer-Meters | 1.00000 | 0.64381 |
| 4 | 182 | RBASE_DISCMTRR | RBASE - Distribution-Customer-Meter Reading | 1.00000 | 0.89424 |
| 5 | 183 | RBASE_DISCBIL | RBASE - Distribution-Customer-Billing & Collections | 1.00000 | 0.89424 |
| 6 | 184 | RBASE_DISCINF | RBASE - Distribution-Customer-Service & Info | - | - |
| 7 | 185 | RBASE_DISCOTH | RBASE - Distribution-Customer-Other | 1.00000 | 0.43537 |
| 8 | 186 | | | | |
| 9 | 187 | | | | |
| 10 | 188 | TOTAL_O&M_PROD | Total O&M Expense - Production-Demand | 1.000 | 0.504 |
| 11 | 189 | TOTAL_O&M_PROEF | Total O&M Expense - Production-Energy-Fuel | - | - |
| 12 | 190 | TOTAL_O&M_PROENF | Total O&M Expense - Production-Energy-Non-Fuel | 1.000 | 0.386 |
| 13 | 191 | TOTAL_O&M_STO_PRO_D | Total O&M Expense - Storage-Production-Demand | 1.000 | 0.504 |
| 14 | 192 | TOTAL_O&M_STO_TRA_D | Total O&M Expense - Storage-Transmission-Demand | 1.000 | 0.432 |
| 15 | 193 | TOTAL_O&M_STO_DIS_DSUB | Total O&M Expense - Storage-Distribution-Demand-Subs | 1.000 | 0.512 |
| 16 | 194 | TOTAL_O&M_STO_DIS_DPRI | Total O&M Expense - Storage-Distribution-Demand-Primary | 1.000 | 0.539 |
| 17 | 195 | TOTAL_O&M_STO_DIS_DSEC | Total O&M Expense - Storage-Distribution-Demand-Secondary | - | - |
| 18 | 196 | TOTAL_O&M_TRAD | Total O&M Expense - Transmission-Demand | 1.000 | 0.432 |
| 19 | 197 | TOTAL_O&M_DISDSUB | Total O&M Expense - Distribution-Demand-Subs | 1.000 | 0.512 |
| 20 | 198 | TOTAL_O&M_DISDPRI | Total O&M Expense - Distribution-Demand-Primary | 1.000 | 0.539 |
| 21 | 199 | TOTAL_O&M_DISDSEC | Total O&M Expense - Distribution-Demand-Secondary | 1.000 | 0.596 |
| 22 | 200 | TOTAL_O&M_DISCSRV | Total O&M Expense - Distribution-Customer-Services | 1.000 | 0.914 |
| 23 | 201 | TOTAL_O&M_DISCMTR | Total O&M Expense - Distribution-Customer-Meters | 1.000 | 0.644 |
| 24 | 202 | TOTAL_O&M_DISCMTRR | Total O&M Expense - Distribution-Customer-Meter Reading | 1.000 | 0.894 |
| 25 | 203 | TOTAL_O&M_DISCBIL | Total O&M Expense - Distribution-Customer-Billing & Collections | 1.000 | 0.890 |
| 26 | 204 | TOTAL_O&M_DISCINF | Total O&M Expense - Distribution-Customer-Service & Info | - | - |
| 27 | 205 | TOTAL_O&M_DISCOTH | Total O&M Expense - Distribution-Customer-Other | 1.000 | 0.747 |
| 28 | | | | | |
| 29 | | **ALLOCATION DETERMINANT TABLES** | | | |
| 30 | | **INDEPENDENT ALLOCATORS** | | | |
| 31 | 1 | RH_DEMAND | Risk Hour Demand | 20,449 | 10,305 |
| 32 | 2 | TRANS_12CP | Transmission Demand (based on 12CP) | 19,056 | 8,232 |
| 33 | 3 | NCP | Max Non Coincident Peak | 2,342 | 1,061 |
| 34 | 4 | NCP_SUBS | Max Non Coincident Peak - Substation Level | 2,073 | 1,061 |
| 35 | 5 | NCP_PRI | Max Non Coincident Peak - Primary Level | 1,969 | 1,061 |
| 36 | 6 | NCP_SEC | Max Non Coincident Peak - Secondary Level | 1,780 | 1,061 |
| 37 | 7 | STORAGE_3S1W | 4CP Demand at Storage Dispatch Peak Hours | - | - |
| 38 | 8 | AVGDEMAND | Average Demand | 978,671 | 401,553 |
| 39 | 9 | ENERGY | Energy - kWh at Generation (used for Base Fuel Items) | 10,373,188,895 | 3,517,605,854 |

This schedule is sponsored by PNM Witness Larkin

**PUBLIC SERVICE OF NEW MEXICO**
**Base Period Ending June 30th, 2026**

| Class_Factors Line No. | Factor No. | | | Schedule 1B Residential | Schedule 2 Small Power |
|---|---|---|---|---|---|
| 1 | 179 | RBASE_DISDSEC | RBASE - Distribution-Demand-Secondary | 0.00000 | 0.14405 |
| 2 | 180 | RBASE_DISCSRV | RBASE - Distribution-Customer-Services | 0.00000 | 0.08570 |
| 3 | 181 | RBASE_DISCMTR | RBASE - Distribution-Customer-Meters | 0.00000 | 0.20874 |
| 4 | 182 | RBASE_DISCMTRR | RBASE - Distribution-Customer-Meter Reading | 0.00000 | 0.09685 |
| 5 | 183 | RBASE_DISCBIL | RBASE - Distribution-Customer-Billing & Collections | 0.00000 | 0.09685 |
| 6 | 184 | RBASE_DISCINF | RBASE - Distribution-Customer-Service & Info | - | - |
| 7 | 185 | RBASE_DISCOTH | RBASE - Distribution-Customer-Other | (0.00000) | 0.06386 |
| 8 | 186 | | | | |
| 9 | 187 | | | | |
| 10 | 188 | TOTAL_O&M_PROD | Total O&M Expense - Production-Demand | 0.000 | 0.113 |
| 11 | 189 | TOTAL_O&M_PROEF | Total O&M Expense - Production-Energy-Fuel | - | - |
| 12 | 190 | TOTAL_O&M_PROENF | Total O&M Expense - Production-Energy-Non-Fuel | - | 0.114 |
| 13 | 191 | TOTAL_O&M_STO_PRO_D | Total O&M Expense - Storage-Production-Demand | - | 0.113 |
| 14 | 192 | TOTAL_O&M_STO_TRA_D | Total O&M Expense - Storage-Transmission-Demand | - | 0.100 |
| 15 | 193 | TOTAL_O&M_STO_DIS_DSUB | Total O&M Expense - Storage-Distribution-Demand-Subs | - | 0.124 |
| 16 | 194 | TOTAL_O&M_STO_DIS_DPRI | Total O&M Expense - Storage-Distribution-Demand-Primary | - | 0.130 |
| 17 | 195 | TOTAL_O&M_STO_DIS_DSEC | Total O&M Expense - Storage-Distribution-Demand-Secondary | - | - |
| 18 | 196 | TOTAL_O&M_TRAD | Total O&M Expense - Transmission-Demand | 0.000 | 0.100 |
| 19 | 197 | TOTAL_O&M_DISDSUB | Total O&M Expense - Distribution-Demand-Subs | 0.000 | 0.124 |
| 20 | 198 | TOTAL_O&M_DISDPRI | Total O&M Expense - Distribution-Demand-Primary | 0.000 | 0.130 |
| 21 | 199 | TOTAL_O&M_DISDSEC | Total O&M Expense - Distribution-Demand-Secondary | 0.000 | 0.144 |
| 22 | 200 | TOTAL_O&M_DISCSRV | Total O&M Expense - Distribution-Customer-Services | 0.000 | 0.086 |
| 23 | 201 | TOTAL_O&M_DISCMTR | Total O&M Expense - Distribution-Customer-Meters | 0.000 | 0.209 |
| 24 | 202 | TOTAL_O&M_DISCMTRR | Total O&M Expense - Distribution-Customer-Meter Reading | - | 0.097 |
| 25 | 203 | TOTAL_O&M_DISCBIL | Total O&M Expense - Distribution-Customer-Billing & Collections | - | 0.086 |
| 26 | 204 | TOTAL_O&M_DISCINF | Total O&M Expense - Distribution-Customer-Service & Info | - | - |
| 27 | 205 | TOTAL_O&M_DISCOTH | Total O&M Expense - Distribution-Customer-Other | 0.000 | 0.094 |
| 28 | | | | | |
| 29 | | **ALLOCATION DETERMINANT TABLES** | | | |
| 30 | | **INDEPENDENT ALLOCATORS** | | | |
| 31 | 1 | RH_DEMAND | Risk Hour Demand | - | 2,318 |
| 32 | 2 | TRANS_12CP | Transmission Demand (based on 12CP) | - | 1,900 |
| 33 | 3 | NCP | Max Non Coincident Peak | - | 256 |
| 34 | 4 | NCP_SUBS | Max Non Coincident Peak - Substation Level | - | 256 |
| 35 | 5 | NCP_PRI | Max Non Coincident Peak - Primary Level | - | 256 |
| 36 | 6 | NCP_SEC | Max Non Coincident Peak - Secondary Level | - | 256 |
| 37 | 7 | STORAGE_3S1W | 4CP Demand at Storage Dispatch Peak Hours | - | - |
| 38 | 8 | AVGDEMAND | Average Demand | - | 113,829 |
| 39 | 9 | ENERGY | Energy - kWh at Generation (used for Base Fuel Items) | - | 997,138,606 |

This schedule is sponsored by PNM Witness Larkin

**PUBLIC SERVICE OF NEW MEXICO**
**Base Period Ending June 30th, 2026**

| Class_Factors Line No. | Factor No. | | | Schedule 2B Small Power | Schedule 3B General Power |
|---|---|---|---|---|---|
| 1 | 179 | RBASE_DISDSEC | RBASE - Distribution-Demand-Secondary | 0.00000 | 0.17453 |
| 2 | 180 | RBASE_DISCSRV | RBASE - Distribution-Customer-Services | 0.00000 | - |
| 3 | 181 | RBASE_DISCMTR | RBASE - Distribution-Customer-Meters | 0.00000 | 0.06274 |
| 4 | 182 | RBASE_DISCMTRR | RBASE - Distribution-Customer-Meter Reading | 0.00000 | 0.00502 |
| 5 | 183 | RBASE_DISCBIL | RBASE - Distribution-Customer-Billing & Collections | 0.00000 | 0.00502 |
| 6 | 184 | RBASE_DISCINF | RBASE - Distribution-Customer-Service & Info | - | - |
| 7 | 185 | RBASE_DISCOTH | RBASE - Distribution-Customer-Other | (0.00000) | 0.01277 |
| 8 | 186 | | | | |
| 9 | 187 | | | | |
| 10 | 188 | TOTAL_O&M_PROD | Total O&M Expense - Production-Demand | 0.000 | 0.165 |
| 11 | 189 | TOTAL_O&M_PROEF | Total O&M Expense - Production-Energy-Fuel | - | - |
| 12 | 190 | TOTAL_O&M_PROENF | Total O&M Expense - Production-Energy-Non-Fuel | - | 0.166 |
| 13 | 191 | TOTAL_O&M_STO_PRO_D | Total O&M Expense - Storage-Production-Demand | - | 0.165 |
| 14 | 192 | TOTAL_O&M_STO_TRA_D | Total O&M Expense - Storage-Transmission-Demand | - | 0.148 |
| 15 | 193 | TOTAL_O&M_STO_DIS_DSUB | Total O&M Expense - Storage-Distribution-Demand-Subs | - | 0.150 |
| 16 | 194 | TOTAL_O&M_STO_DIS_DPRI | Total O&M Expense - Storage-Distribution-Demand-Primary | - | 0.158 |
| 17 | 195 | TOTAL_O&M_STO_DIS_DSEC | Total O&M Expense - Storage-Distribution-Demand-Secondary | - | - |
| 18 | 196 | TOTAL_O&M_TRAD | Total O&M Expense - Transmission-Demand | 0.000 | 0.148 |
| 19 | 197 | TOTAL_O&M_DISDSUB | Total O&M Expense - Distribution-Demand-Subs | 0.000 | 0.150 |
| 20 | 198 | TOTAL_O&M_DISDPRI | Total O&M Expense - Distribution-Demand-Primary | 0.000 | 0.158 |
| 21 | 199 | TOTAL_O&M_DISDSEC | Total O&M Expense - Distribution-Demand-Secondary | 0.000 | 0.175 |
| 22 | 200 | TOTAL_O&M_DISCSRV | Total O&M Expense - Distribution-Customer-Services | 0.000 | - |
| 23 | 201 | TOTAL_O&M_DISCMTR | Total O&M Expense - Distribution-Customer-Meters | 0.000 | 0.063 |
| 24 | 202 | TOTAL_O&M_DISCMTRR | Total O&M Expense - Distribution-Customer-Meter Reading | - | 0.005 |
| 25 | 203 | TOTAL_O&M_DISCBIL | Total O&M Expense - Distribution-Customer-Billing & Collections | - | 0.016 |
| 26 | 204 | TOTAL_O&M_DISCINF | Total O&M Expense - Distribution-Customer-Service & Info | - | - |
| 27 | 205 | TOTAL_O&M_DISCOTH | Total O&M Expense - Distribution-Customer-Other | 0.000 | 0.035 |
| 28 | | | | | |
| 29 | | **ALLOCATION DETERMINANT TABLES** | | | |
| 30 | | **INDEPENDENT ALLOCATORS** | | | |
| 31 | 1 | RH_DEMAND | Risk Hour Demand | - | 3,378 |
| 32 | 2 | TRANS_12CP | Transmission Demand (based on 12CP) | - | 2,817 |
| 33 | 3 | NCP | Max Non Coincident Peak | - | 311 |
| 34 | 4 | NCP_SUBS | Max Non Coincident Peak - Substation Level | - | 311 |
| 35 | 5 | NCP_PRI | Max Non Coincident Peak - Primary Level | - | 311 |
| 36 | 6 | NCP_SEC | Max Non Coincident Peak - Secondary Level | - | 311 |
| 37 | 7 | STORAGE_3S1W | 4CP Demand at Storage Dispatch Peak Hours | - | - |
| 38 | 8 | AVGDEMAND | Average Demand | - | 173,693 |
| 39 | 9 | ENERGY | Energy - kWh at Generation (used for Base Fuel Items) | - | 1,521,551,073 |

This schedule is sponsored by PNM Witness Larkin

**PUBLIC SERVICE OF NEW MEXICO**
**Base Period Ending June 30th, 2026**

| Line No. | Class_Factors Factor No. | | | Schedule 3C GP Low LF | Schedule 3D General Power Gov |
|---|---|---|---|---|---|
| 1 | 179 | RBASE_DISDSEC | RBASE - Distribution-Demand-Secondary | 0.05349 | 0.01172 |
| 2 | 180 | RBASE_DISCSRV | RBASE - Distribution-Customer-Services | - | - |
| 3 | 181 | RBASE_DISCMTR | RBASE - Distribution-Customer-Meters | 0.02751 | 0.00388 |
| 4 | 182 | RBASE_DISCMTRR | RBASE - Distribution-Customer-Meter Reading | 0.00220 | 0.00031 |
| 5 | 183 | RBASE_DISCBIL | RBASE - Distribution-Customer-Billing & Collections | 0.00220 | 0.00031 |
| 6 | 184 | RBASE_DISCINF | RBASE - Distribution-Customer-Service & Info | - | - |
| 7 | 185 | RBASE_DISCOTH | RBASE - Distribution-Customer-Other | 0.00655 | 0.00184 |
| 8 | 186 | | | | |
| 9 | 187 | | | | |
| 10 | 188 | TOTAL_O&M_PROD | Total O&M Expense - Production-Demand | 0.035 | 0.011 |
| 11 | 189 | TOTAL_O&M_PROEF | Total O&M Expense - Production-Energy-Fuel | - | - |
| 12 | 190 | TOTAL_O&M_PROENF | Total O&M Expense - Production-Energy-Non-Fuel | 0.038 | 0.012 |
| 13 | 191 | TOTAL_O&M_STO_PRO_D | Total O&M Expense - Storage-Production-Demand | 0.035 | 0.011 |
| 14 | 192 | TOTAL_O&M_STO_TRA_D | Total O&M Expense - Storage-Transmission-Demand | 0.030 | 0.010 |
| 15 | 193 | TOTAL_O&M_STO_DIS_DSUB | Total O&M Expense - Storage-Distribution-Demand-Subs | 0.046 | 0.010 |
| 16 | 194 | TOTAL_O&M_STO_DIS_DPRI | Total O&M Expense - Storage-Distribution-Demand-Primary | 0.048 | 0.011 |
| 17 | 195 | TOTAL_O&M_STO_DIS_DSEC | Total O&M Expense - Storage-Distribution-Demand-Secondary | - | - |
| 18 | 196 | TOTAL_O&M_TRAD | Total O&M Expense - Transmission-Demand | 0.030 | 0.010 |
| 19 | 197 | TOTAL_O&M_DISDSUB | Total O&M Expense - Distribution-Demand-Subs | 0.046 | 0.010 |
| 20 | 198 | TOTAL_O&M_DISDPRI | Total O&M Expense - Distribution-Demand-Primary | 0.048 | 0.011 |
| 21 | 199 | TOTAL_O&M_DISDSEC | Total O&M Expense - Distribution-Demand-Secondary | 0.053 | 0.012 |
| 22 | 200 | TOTAL_O&M_DISCSRV | Total O&M Expense - Distribution-Customer-Services | - | - |
| 23 | 201 | TOTAL_O&M_DISCMTR | Total O&M Expense - Distribution-Customer-Meters | 0.028 | 0.004 |
| 24 | 202 | TOTAL_O&M_DISCMTRR | Total O&M Expense - Distribution-Customer-Meter Reading | 0.002 | 0.000 |
| 25 | 203 | TOTAL_O&M_DISCBIL | Total O&M Expense - Distribution-Customer-Billing & Collections | 0.007 | 0.000 |
| 26 | 204 | TOTAL_O&M_DISCINF | Total O&M Expense - Distribution-Customer-Service & Info | - | - |
| 27 | 205 | TOTAL_O&M_DISCOTH | Total O&M Expense - Distribution-Customer-Other | 0.009 | 0.002 |
| 28 | | | | | |
| 29 | | **ALLOCATION DETERMINANT TABLES** | | | |
| 30 | | **INDEPENDENT ALLOCATORS** | | | |
| 31 | 1 | RH_DEMAND | Risk Hour Demand | 713 | 229 |
| 32 | 2 | TRANS_12CP | Transmission Demand (based on 12CP) | 571 | 193 |
| 33 | 3 | NCP | Max Non Coincident Peak | 95 | 21 |
| 34 | 4 | NCP_SUBS | Max Non Coincident Peak - Substation Level | 95 | 21 |
| 35 | 5 | NCP_PRI | Max Non Coincident Peak - Primary Level | 95 | 21 |
| 36 | 6 | NCP_SEC | Max Non Coincident Peak - Secondary Level | 95 | 21 |
| 37 | 7 | STORAGE_3S1W | 4CP Demand at Storage Dispatch Peak Hours | - | - |
| 38 | 8 | AVGDEMAND | Average Demand | 39,318 | 12,546 |
| 39 | 9 | ENERGY | Energy - kWh at Generation (used for Base Fuel Items) | 344,426,139 | 109,899,269 |

This schedule is sponsored by PNM Witness Larkin

**PUBLIC SERVICE OF NEW MEXICO**
**Base Period Ending June 30th, 2026**

| Class_Factors Line No. | Factor No. | | | Schedule 3E GP Low LF Gov |
|---|---|---|---|---|
| 1 | 179 | RBASE_DISDSEC | RBASE - Distribution-Demand-Secondary | 0.00480 |
| 2 | 180 | RBASE_DISCSRV | RBASE - Distribution-Customer-Services | - |
| 3 | 181 | RBASE_DISCMTR | RBASE - Distribution-Customer-Meters | 0.00161 |
| 4 | 182 | RBASE_DISCMTRR | RBASE - Distribution-Customer-Meter Reading | 0.00013 |
| 5 | 183 | RBASE_DISCBIL | RBASE - Distribution-Customer-Billing & Collections | 0.00013 |
| 6 | 184 | RBASE_DISCINF | RBASE - Distribution-Customer-Service & Info | - |
| 7 | 185 | RBASE_DISCOTH | RBASE - Distribution-Customer-Other | 0.00047 |
| 8 | 186 | | | |
| 9 | 187 | | | |
| 10 | 188 | TOTAL_O&M_PROD | Total O&M Expense - Production-Demand | 0.003 |
| 11 | 189 | TOTAL_O&M_PROEF | Total O&M Expense - Production-Energy-Fuel | - |
| 12 | 190 | TOTAL_O&M_PROENF | Total O&M Expense - Production-Energy-Non-Fuel | 0.003 |
| 13 | 191 | TOTAL_O&M_STO_PRO_D | Total O&M Expense - Storage-Production-Demand | 0.003 |
| 14 | 192 | TOTAL_O&M_STO_TRA_D | Total O&M Expense - Storage-Transmission-Demand | 0.002 |
| 15 | 193 | TOTAL_O&M_STO_DIS_DSUB | Total O&M Expense - Storage-Distribution-Demand-Subs | 0.004 |
| 16 | 194 | TOTAL_O&M_STO_DIS_DPRI | Total O&M Expense - Storage-Distribution-Demand-Primary | 0.004 |
| 17 | 195 | TOTAL_O&M_STO_DIS_DSEC | Total O&M Expense - Storage-Distribution-Demand-Secondary | - |
| 18 | 196 | TOTAL_O&M_TRAD | Total O&M Expense - Transmission-Demand | 0.002 |
| 19 | 197 | TOTAL_O&M_DISDSUB | Total O&M Expense - Distribution-Demand-Subs | 0.004 |
| 20 | 198 | TOTAL_O&M_DISDPRI | Total O&M Expense - Distribution-Demand-Primary | 0.004 |
| 21 | 199 | TOTAL_O&M_DISDSEC | Total O&M Expense - Distribution-Demand-Secondary | 0.005 |
| 22 | 200 | TOTAL_O&M_DISCSRV | Total O&M Expense - Distribution-Customer-Services | - |
| 23 | 201 | TOTAL_O&M_DISCMTR | Total O&M Expense - Distribution-Customer-Meters | 0.002 |
| 24 | 202 | TOTAL_O&M_DISCMTRR | Total O&M Expense - Distribution-Customer-Meter Reading | 0.000 |
| 25 | 203 | TOTAL_O&M_DISCBIL | Total O&M Expense - Distribution-Customer-Billing & Collections | 0.000 |
| 26 | 204 | TOTAL_O&M_DISCINF | Total O&M Expense - Distribution-Customer-Service & Info | - |
| 27 | 205 | TOTAL_O&M_DISCOTH | Total O&M Expense - Distribution-Customer-Other | 0.001 |
| 28 | | | | |
| 29 | | **ALLOCATION DETERMINANT TABLES** | | |
| 30 | | **INDEPENDENT ALLOCATORS** | | |
| 31 | 1 | RH_DEMAND | Risk Hour Demand | 59 |
| 32 | 2 | TRANS_12CP | Transmission Demand (based on 12CP) | 46 |
| 33 | 3 | NCP | Max Non Coincident Peak | 9 |
| 34 | 4 | NCP_SUBS | Max Non Coincident Peak - Substation Level | 9 |
| 35 | 5 | NCP_PRI | Max Non Coincident Peak - Primary Level | 9 |
| 36 | 6 | NCP_SEC | Max Non Coincident Peak - Secondary Level | 9 |
| 37 | 7 | STORAGE_3S1W | 4CP Demand at Storage Dispatch Peak Hours | - |
| 38 | 8 | AVGDEMAND | Average Demand | 3,085 |
| 39 | 9 | ENERGY | Energy - kWh at Generation (used for Base Fuel Items) | 27,021,286 |

This schedule is sponsored by PNM Witness Larkin

**PUBLIC SERVICE OF NEW MEXICO**
**Base Period Ending June 30th, 2026**

| Line No. | Class_Factors Factor No. | | | Schedule 3F GP Charging Stations | Schedule 4 Large Power |
|---|---|---|---|---|---|
| 1 | 179 | RBASE_DISDSEC | RBASE - Distribution-Demand-Secondary | 0.00203 | - |
| 2 | 180 | RBASE_DISCSRV | RBASE - Distribution-Customer-Services | - | - |
| 3 | 181 | RBASE_DISCMTR | RBASE - Distribution-Customer-Meters | 0.00036 | 0.02084 |
| 4 | 182 | RBASE_DISCMTRR | RBASE - Distribution-Customer-Meter Reading | 0.00003 | 0.00031 |
| 5 | 183 | RBASE_DISCBIL | RBASE - Distribution-Customer-Billing & Collections | 0.00003 | 0.00031 |
| 6 | 184 | RBASE_DISCINF | RBASE - Distribution-Customer-Service & Info | - | - |
| 7 | 185 | RBASE_DISCOTH | RBASE - Distribution-Customer-Other | 0.00013 | 0.01399 |
| 8 | 186 | | | | |
| 9 | 187 | | | | |
| 10 | 188 | TOTAL_O&M_PROD | Total O&M Expense - Production-Demand | 0.001 | 0.083 |
| 11 | 189 | TOTAL_O&M_PROEF | Total O&M Expense - Production-Energy-Fuel | - | - |
| 12 | 190 | TOTAL_O&M_PROENF | Total O&M Expense - Production-Energy-Non-Fuel | 0.001 | 0.099 |
| 13 | 191 | TOTAL_O&M_STO_PRO_D | Total O&M Expense - Storage-Production-Demand | 0.001 | 0.083 |
| 14 | 192 | TOTAL_O&M_STO_TRA_D | Total O&M Expense - Storage-Transmission-Demand | 0.001 | 0.074 |
| 15 | 193 | TOTAL_O&M_STO_DIS_DSUB | Total O&M Expense - Storage-Distribution-Demand-Subs | 0.002 | 0.068 |
| 16 | 194 | TOTAL_O&M_STO_DIS_DPRI | Total O&M Expense - Storage-Distribution-Demand-Primary | 0.002 | 0.072 |
| 17 | 195 | TOTAL_O&M_STO_DIS_DSEC | Total O&M Expense - Storage-Distribution-Demand-Secondary | - | - |
| 18 | 196 | TOTAL_O&M_TRAD | Total O&M Expense - Transmission-Demand | 0.001 | 0.074 |
| 19 | 197 | TOTAL_O&M_DISDSUB | Total O&M Expense - Distribution-Demand-Subs | 0.002 | 0.068 |
| 20 | 198 | TOTAL_O&M_DISDPRI | Total O&M Expense - Distribution-Demand-Primary | 0.002 | 0.072 |
| 21 | 199 | TOTAL_O&M_DISDSEC | Total O&M Expense - Distribution-Demand-Secondary | 0.002 | - |
| 22 | 200 | TOTAL_O&M_DISCSRV | Total O&M Expense - Distribution-Customer-Services | - | - |
| 23 | 201 | TOTAL_O&M_DISCMTR | Total O&M Expense - Distribution-Customer-Meters | 0.000 | 0.021 |
| 24 | 202 | TOTAL_O&M_DISCMTRR | Total O&M Expense - Distribution-Customer-Meter Reading | 0.000 | 0.000 |
| 25 | 203 | TOTAL_O&M_DISCBIL | Total O&M Expense - Distribution-Customer-Billing & Collections | 0.000 | 0.000 |
| 26 | 204 | TOTAL_O&M_DISCINF | Total O&M Expense - Distribution-Customer-Service & Info | - | - |
| 27 | 205 | TOTAL_O&M_DISCOTH | Total O&M Expense - Distribution-Customer-Other | 0.000 | 0.019 |
| 28 | | | | | |
| 29 | | **ALLOCATION DETERMINANT TABLES** | | | |
| 30 | | **INDEPENDENT ALLOCATORS** | | | |
| 31 | 1 | RH_DEMAND | Risk Hour Demand | 14 | 1,687 |
| 32 | 2 | TRANS_12CP | Transmission Demand (based on 12CP) | 10 | 1,401 |
| 33 | 3 | NCP | Max Non Coincident Peak | 4 | 141 |
| 34 | 4 | NCP_SUBS | Max Non Coincident Peak - Substation Level | 4 | 141 |
| 35 | 5 | NCP_PRI | Max Non Coincident Peak - Primary Level | 4 | 141 |
| 36 | 6 | NCP_SEC | Max Non Coincident Peak - Secondary Level | 4 | - |
| 37 | 7 | STORAGE_3S1W | 4CP Demand at Storage Dispatch Peak Hours | - | - |
| 38 | 8 | AVGDEMAND | Average Demand | 837 | 101,811 |
| 39 | 9 | ENERGY | Energy - kWh at Generation (used for Base Fuel Items) | 7,332,235 | 891,865,002 |

This schedule is sponsored by PNM Witness Larkin

**PUBLIC SERVICE OF NEW MEXICO**
**Base Period Ending June 30th, 2026**

| Class_Factors Line No. | Factor No. | | | Schedule 5 Industrial Power | Schedule 10 Irrigation |
|---|---|---|---|---|---|
| 1 | 179 | RBASE_DISDSEC | RBASE - Distribution-Demand-Secondary | - | 0.00365 |
| 2 | 180 | RBASE_DISCSRV | RBASE - Distribution-Customer-Services | - | - |
| 3 | 181 | RBASE_DISCMTR | RBASE - Distribution-Customer-Meters | 0.00012 | 0.00705 |
| 4 | 182 | RBASE_DISCMTRR | RBASE - Distribution-Customer-Meter Reading | 0.00000 | 0.00056 |
| 5 | 183 | RBASE_DISCBIL | RBASE - Distribution-Customer-Billing & Collections | 0.00000 | 0.00056 |
| 6 | 184 | RBASE_DISCINF | RBASE - Distribution-Customer-Service & Info | - | - |
| 7 | 185 | RBASE_DISCOTH | RBASE - Distribution-Customer-Other | 0.00019 | 0.00072 |
| 8 | 186 | | | | |
| 9 | 187 | | | | |
| 10 | 188 | TOTAL_O&M_PROD | Total O&M Expense - Production-Demand | 0.002 | 0.002 |
| 11 | 189 | TOTAL_O&M_PROEF | Total O&M Expense - Production-Energy-Fuel | - | - |
| 12 | 190 | TOTAL_O&M_PROENF | Total O&M Expense - Production-Energy-Non-Fuel | 0.001 | 0.003 |
| 13 | 191 | TOTAL_O&M_STO_PRO_D | Total O&M Expense - Storage-Production-Demand | 0.002 | 0.002 |
| 14 | 192 | TOTAL_O&M_STO_TRA_D | Total O&M Expense - Storage-Transmission-Demand | 0.002 | 0.002 |
| 15 | 193 | TOTAL_O&M_STO_DIS_DSUB | Total O&M Expense - Storage-Distribution-Demand-Subs | - | 0.003 |
| 16 | 194 | TOTAL_O&M_STO_DIS_DPRI | Total O&M Expense - Storage-Distribution-Demand-Primary | - | 0.003 |
| 17 | 195 | TOTAL_O&M_STO_DIS_DSEC | Total O&M Expense - Storage-Distribution-Demand-Secondary | - | - |
| 18 | 196 | TOTAL_O&M_TRAD | Total O&M Expense - Transmission-Demand | 0.002 | 0.002 |
| 19 | 197 | TOTAL_O&M_DISDSUB | Total O&M Expense - Distribution-Demand-Subs | - | 0.003 |
| 20 | 198 | TOTAL_O&M_DISDPRI | Total O&M Expense - Distribution-Demand-Primary | - | 0.003 |
| 21 | 199 | TOTAL_O&M_DISDSEC | Total O&M Expense - Distribution-Demand-Secondary | - | 0.004 |
| 22 | 200 | TOTAL_O&M_DISCSRV | Total O&M Expense - Distribution-Customer-Services | - | - |
| 23 | 201 | TOTAL_O&M_DISCMTR | Total O&M Expense - Distribution-Customer-Meters | 0.000 | 0.007 |
| 24 | 202 | TOTAL_O&M_DISCMTRR | Total O&M Expense - Distribution-Customer-Meter Reading | 0.000 | 0.001 |
| 25 | 203 | TOTAL_O&M_DISCBIL | Total O&M Expense - Distribution-Customer-Billing & Collections | 0.000 | 0.000 |
| 26 | 204 | TOTAL_O&M_DISCINF | Total O&M Expense - Distribution-Customer-Service & Info | - | - |
| 27 | 205 | TOTAL_O&M_DISCOTH | Total O&M Expense - Distribution-Customer-Other | 0.000 | 0.001 |
| 28 | | | | | |
| 29 | | **ALLOCATION DETERMINANT TABLES** | | | |
| 30 | | **INDEPENDENT ALLOCATORS** | | | |
| 31 | 1 | RH_DEMAND | Risk Hour Demand | 35 | 48 |
| 32 | 2 | TRANS_12CP | Transmission Demand (based on 12CP) | 29 | 38 |
| 33 | 3 | NCP | Max Non Coincident Peak | 3 | 6 |
| 34 | 4 | NCP_SUBS | Max Non Coincident Peak - Substation Level | - | 6 |
| 35 | 5 | NCP_PRI | Max Non Coincident Peak - Primary Level | - | 6 |
| 36 | 6 | NCP_SEC | Max Non Coincident Peak - Secondary Level | - | 6 |
| 37 | 7 | STORAGE_3S1W | 4CP Demand at Storage Dispatch Peak Hours | - | - |
| 38 | 8 | AVGDEMAND | Average Demand | 1,399 | 2,836 |
| 39 | 9 | ENERGY | Energy - kWh at Generation (used for Base Fuel Items) | 12,252,721 | 24,841,755 |

This schedule is sponsored by PNM Witness Larkin

**PUBLIC SERVICE OF NEW MEXICO**
**Base Period Ending June 30th, 2026**

| Class_Factors Line No. | Factor No. | | | Schedule 11 Water & Sewage | Schedule 15 Industrial Power |
|---|---|---|---|---|---|
| 1 | 179 | RBASE_DISDSEC | RBASE - Distribution-Demand-Secondary | - | - |
| 2 | 180 | RBASE_DISCSRV | RBASE - Distribution-Customer-Services | - | - |
| 3 | 181 | RBASE_DISCMTR | RBASE - Distribution-Customer-Meters | 0.01917 | 0.00 |
| 4 | 182 | RBASE_DISCMTRR | RBASE - Distribution-Customer-Meter Reading | 0.00029 | 0.00 |
| 5 | 183 | RBASE_DISCBIL | RBASE - Distribution-Customer-Billing & Collections | 0.00029 | 0.00 |
| 6 | 184 | RBASE_DISCINF | RBASE - Distribution-Customer-Service & Info | - | - |
| 7 | 185 | RBASE_DISCOTH | RBASE - Distribution-Customer-Other | 0.00299 | 0.00 |
| 8 | 186 | | | | |
| 9 | 187 | | | | |
| 10 | 188 | TOTAL_O&M_PROD | Total O&M Expense - Production-Demand | 0.009 | 0.01 |
| 11 | 189 | TOTAL_O&M_PROEF | Total O&M Expense - Production-Energy-Fuel | - | - |
| 12 | 190 | TOTAL_O&M_PROENF | Total O&M Expense - Production-Energy-Non-Fuel | 0.020 | 0.01 |
| 13 | 191 | TOTAL_O&M_STO_PRO_D | Total O&M Expense - Storage-Production-Demand | 0.009 | 0.01 |
| 14 | 192 | TOTAL_O&M_STO_TRA_D | Total O&M Expense - Storage-Transmission-Demand | 0.009 | 0.01 |
| 15 | 193 | TOTAL_O&M_STO_DIS_DSUB | Total O&M Expense - Storage-Distribution-Demand-Subs | 0.023 | - |
| 16 | 194 | TOTAL_O&M_STO_DIS_DPRI | Total O&M Expense - Storage-Distribution-Demand-Primary | 0.024 | - |
| 17 | 195 | TOTAL_O&M_STO_DIS_DSEC | Total O&M Expense - Storage-Distribution-Demand-Secondary | - | - |
| 18 | 196 | TOTAL_O&M_TRAD | Total O&M Expense - Transmission-Demand | 0.009 | 0.01 |
| 19 | 197 | TOTAL_O&M_DISDSUB | Total O&M Expense - Distribution-Demand-Subs | 0.023 | - |
| 20 | 198 | TOTAL_O&M_DISDPRI | Total O&M Expense - Distribution-Demand-Primary | 0.024 | - |
| 21 | 199 | TOTAL_O&M_DISDSEC | Total O&M Expense - Distribution-Demand-Secondary | - | - |
| 22 | 200 | TOTAL_O&M_DISCSRV | Total O&M Expense - Distribution-Customer-Services | - | - |
| 23 | 201 | TOTAL_O&M_DISCMTR | Total O&M Expense - Distribution-Customer-Meters | 0.019 | 0.00 |
| 24 | 202 | TOTAL_O&M_DISCMTRR | Total O&M Expense - Distribution-Customer-Meter Reading | 0.000 | 0.00 |
| 25 | 203 | TOTAL_O&M_DISCBIL | Total O&M Expense - Distribution-Customer-Billing & Collections | 0.000 | 0.00 |
| 26 | 204 | TOTAL_O&M_DISCINF | Total O&M Expense - Distribution-Customer-Service & Info | - | - |
| 27 | 205 | TOTAL_O&M_DISCOTH | Total O&M Expense - Distribution-Customer-Other | 0.004 | 0.00 |
| 28 | | | | | |
| 29 | | **ALLOCATION DETERMINANT TABLES** | | | |
| 30 | | **INDEPENDENT ALLOCATORS** | | | |
| 31 | 1 | RH_DEMAND | Risk Hour Demand | 175 | 124.89 |
| 32 | 2 | TRANS_12CP | Transmission Demand (based on 12CP) | 176 | 103.46 |
| 33 | 3 | NCP | Max Non Coincident Peak | 47 | 16.90 |
| 34 | 4 | NCP_SUBS | Max Non Coincident Peak - Substation Level | 47 | - |
| 35 | 5 | NCP_PRI | Max Non Coincident Peak - Primary Level | 47 | - |
| 36 | 6 | NCP_SEC | Max Non Coincident Peak - Secondary Level | - | - |
| 37 | 7 | STORAGE_3S1W | 4CP Demand at Storage Dispatch Peak Hours | - | - |
| 38 | 8 | AVGDEMAND | Average Demand | 21,253 | 7,959 |
| 39 | 9 | ENERGY | Energy - kWh at Generation (used for Base Fuel Items) | 186,172,495 | 69,724,397.49 |

This schedule is sponsored by PNM Witness Larkin

**PUBLIC SERVICE OF NEW MEXICO**
**Base Period Ending June 30th, 2026**

| Class_Factors Line No. | Factor No. | | | Schedule 30 Industrial Power | Schedule 33B Large Service |
|---|---|---|---|---|---|
| 1 | 179 | RBASE_DISDSEC | RBASE - Distribution-Demand-Secondary | - | - |
| 2 | 180 | RBASE_DISCSRV | RBASE - Distribution-Customer-Services | - | - |
| 3 | 181 | RBASE_DISCMTR | RBASE - Distribution-Customer-Meters | 0.00167 | 0.00024 |
| 4 | 182 | RBASE_DISCMTRR | RBASE - Distribution-Customer-Meter Reading | 0.00002 | 0.00000 |
| 5 | 183 | RBASE_DISCBIL | RBASE - Distribution-Customer-Billing & Collections | 0.00002 | 0.00000 |
| 6 | 184 | RBASE_DISCINF | RBASE - Distribution-Customer-Service & Info | - | - |
| 7 | 185 | RBASE_DISCOTH | RBASE - Distribution-Customer-Other | 0.01027 | 0.00005 |
| 8 | 186 | | | | |
| 9 | 187 | | | | |
| 10 | 188 | TOTAL_O&M_PROD | Total O&M Expense - Production-Demand | 0.051 | 0.001 |
| 11 | 189 | TOTAL_O&M_PROEF | Total O&M Expense - Production-Energy-Fuel | - | - |
| 12 | 190 | TOTAL_O&M_PROENF | Total O&M Expense - Production-Energy-Non-Fuel | 0.074 | 0.000 |
| 13 | 191 | TOTAL_O&M_STO_PRO_D | Total O&M Expense - Storage-Production-Demand | 0.051 | 0.001 |
| 14 | 192 | TOTAL_O&M_STO_TRA_D | Total O&M Expense - Storage-Transmission-Demand | 0.045 | 0.001 |
| 15 | 193 | TOTAL_O&M_STO_DIS_DSUB | Total O&M Expense - Storage-Distribution-Demand-Subs | 0.038 | - |
| 16 | 194 | TOTAL_O&M_STO_DIS_DPRI | Total O&M Expense - Storage-Distribution-Demand-Primary | - | - |
| 17 | 195 | TOTAL_O&M_STO_DIS_DSEC | Total O&M Expense - Storage-Distribution-Demand-Secondary | - | - |
| 18 | 196 | TOTAL_O&M_TRAD | Total O&M Expense - Transmission-Demand | 0.045 | 0.001 |
| 19 | 197 | TOTAL_O&M_DISDSUB | Total O&M Expense - Distribution-Demand-Subs | 0.038 | - |
| 20 | 198 | TOTAL_O&M_DISDPRI | Total O&M Expense - Distribution-Demand-Primary | - | - |
| 21 | 199 | TOTAL_O&M_DISDSEC | Total O&M Expense - Distribution-Demand-Secondary | - | - |
| 22 | 200 | TOTAL_O&M_DISCSRV | Total O&M Expense - Distribution-Customer-Services | - | - |
| 23 | 201 | TOTAL_O&M_DISCMTR | Total O&M Expense - Distribution-Customer-Meters | 0.002 | 0.000 |
| 24 | 202 | TOTAL_O&M_DISCMTRR | Total O&M Expense - Distribution-Customer-Meter Reading | 0.000 | 0.000 |
| 25 | 203 | TOTAL_O&M_DISCBIL | Total O&M Expense - Distribution-Customer-Billing & Collections | 0.000 | 0.000 |
| 26 | 204 | TOTAL_O&M_DISCINF | Total O&M Expense - Distribution-Customer-Service & Info | - | - |
| 27 | 205 | TOTAL_O&M_DISCOTH | Total O&M Expense - Distribution-Customer-Other | 0.014 | 0.000 |
| 28 | | | | | |
| 29 | | **ALLOCATION DETERMINANT TABLES** | | | |
| 30 | | **INDEPENDENT ALLOCATORS** | | | |
| 31 | 1 | RH_DEMAND | Risk Hour Demand | 1,033 | 14 |
| 32 | 2 | TRANS_12CP | Transmission Demand (based on 12CP) | 854 | 12 |
| 33 | 3 | NCP | Max Non Coincident Peak | 80 | 4 |
| 34 | 4 | NCP_SUBS | Max Non Coincident Peak - Substation Level | 80 | - |
| 35 | 5 | NCP_PRI | Max Non Coincident Peak - Primary Level | - | - |
| 36 | 6 | NCP_SEC | Max Non Coincident Peak - Secondary Level | - | - |
| 37 | 7 | STORAGE_3S1W | 4CP Demand at Storage Dispatch Peak Hours | - | - |
| 38 | 8 | AVGDEMAND | Average Demand | 74,427 | 366 |
| 39 | 9 | ENERGY | Energy - kWh at Generation (used for Base Fuel Items) | 651,984,392 | 3,208,814 |

This schedule is sponsored by PNM Witness Larkin

**PUBLIC SERVICE OF NEW MEXICO**
**Base Period Ending June 30th, 2026**

| Line No. | Class_Factors Factor No. | | | Schedule 35B Lg Power Service | Schedule 36B Special Service Rate |
|---|---|---|---|---|---|
| 1 | 179 | RBASE_DISDSEC | RBASE - Distribution-Demand-Secondary | - | - |
| 2 | 180 | RBASE_DISCSRV | RBASE - Distribution-Customer-Services | - | - |
| 3 | 181 | RBASE_DISCMTR | RBASE - Distribution-Customer-Meters | 0.00083 | 0.00095 |
| 4 | 182 | RBASE_DISCMTRR | RBASE - Distribution-Customer-Meter Reading | 0.00001 | 0.00001 |
| 5 | 183 | RBASE_DISCBIL | RBASE - Distribution-Customer-Billing & Collections | 0.00001 | 0.00001 |
| 6 | 184 | RBASE_DISCINF | RBASE - Distribution-Customer-Service & Info | - | - |
| 7 | 185 | RBASE_DISCOTH | RBASE - Distribution-Customer-Other | 0.00255 | 0.00715 |
| 8 | 186 | | | | |
| 9 | 187 | | | | |
| 10 | 188 | TOTAL_O&M_PROD | Total O&M Expense - Production-Demand | 0.014 | - |
| 11 | 189 | TOTAL_O&M_PROEF | Total O&M Expense - Production-Energy-Fuel | - | - |
| 12 | 190 | TOTAL_O&M_PROENF | Total O&M Expense - Production-Energy-Non-Fuel | 0.018 | 0.051 |
| 13 | 191 | TOTAL_O&M_STO_PRO_D | Total O&M Expense - Storage-Production-Demand | 0.014 | - |
| 14 | 192 | TOTAL_O&M_STO_TRA_D | Total O&M Expense - Storage-Transmission-Demand | 0.012 | 0.125 |
| 15 | 193 | TOTAL_O&M_STO_DIS_DSUB | Total O&M Expense - Storage-Distribution-Demand-Subs | 0.012 | - |
| 16 | 194 | TOTAL_O&M_STO_DIS_DPRI | Total O&M Expense - Storage-Distribution-Demand-Primary | - | - |
| 17 | 195 | TOTAL_O&M_STO_DIS_DSEC | Total O&M Expense - Storage-Distribution-Demand-Secondary | - | - |
| 18 | 196 | TOTAL_O&M_TRAD | Total O&M Expense - Transmission-Demand | 0.012 | 0.125 |
| 19 | 197 | TOTAL_O&M_DISDSUB | Total O&M Expense - Distribution-Demand-Subs | 0.012 | - |
| 20 | 198 | TOTAL_O&M_DISDPRI | Total O&M Expense - Distribution-Demand-Primary | - | - |
| 21 | 199 | TOTAL_O&M_DISDSEC | Total O&M Expense - Distribution-Demand-Secondary | - | - |
| 22 | 200 | TOTAL_O&M_DISCSRV | Total O&M Expense - Distribution-Customer-Services | - | - |
| 23 | 201 | TOTAL_O&M_DISCMTR | Total O&M Expense - Distribution-Customer-Meters | 0.001 | 0.001 |
| 24 | 202 | TOTAL_O&M_DISCMTRR | Total O&M Expense - Distribution-Customer-Meter Reading | 0.000 | 0.000 |
| 25 | 203 | TOTAL_O&M_DISCBIL | Total O&M Expense - Distribution-Customer-Billing & Collections | 0.000 | 0.000 |
| 26 | 204 | TOTAL_O&M_DISCINF | Total O&M Expense - Distribution-Customer-Service & Info | - | - |
| 27 | 205 | TOTAL_O&M_DISCOTH | Total O&M Expense - Distribution-Customer-Other | 0.003 | 0.010 |
| 28 | | | | | |
| 29 | | **ALLOCATION DETERMINANT TABLES** | | | |
| 30 | | **INDEPENDENT ALLOCATORS** | | | |
| 31 | 1 | RH_DEMAND | Risk Hour Demand | 286 | - |
| 32 | 2 | TRANS_12CP | Transmission Demand (based on 12CP) | 228 | 2,382 |
| 33 | 3 | NCP | Max Non Coincident Peak | 25 | 245 |
| 34 | 4 | NCP_SUBS | Max Non Coincident Peak - Substation Level | 25 | - |
| 35 | 5 | NCP_PRI | Max Non Coincident Peak - Primary Level | - | - |
| 36 | 6 | NCP_SEC | Max Non Coincident Peak - Secondary Level | - | - |
| 37 | 7 | STORAGE_3S1W | 4CP Demand at Storage Dispatch Peak Hours | - | - |
| 38 | 8 | AVGDEMAND | Average Demand | 18,524 | - |
| 39 | 9 | ENERGY | Energy - kWh at Generation (used for Base Fuel Items) | 162,270,380 | 1,800,029,362 |

This schedule is sponsored by PNM Witness Larkin

**PUBLIC SERVICE OF NEW MEXICO**
**Base Period Ending June 30th, 2026**

| Line No. | Class_Factors Factor No. | | | Schedule 6 Priv. Area Light | Schedule 20 Streetlighting |
|---|---|---|---|---|---|
| 1 | 179 | RBASE_DISDSEC | RBASE - Distribution-Demand-Secondary | 0.00213 | 0.00730 |
| 2 | 180 | RBASE_DISCSRV | RBASE - Distribution-Customer-Services | - | - |
| 3 | 181 | RBASE_DISCMTR | RBASE - Distribution-Customer-Meters | - | - |
| 4 | 182 | RBASE_DISCMTRR | RBASE - Distribution-Customer-Meter Reading | - | - |
| 5 | 183 | RBASE_DISCBIL | RBASE - Distribution-Customer-Billing & Collections | - | - |
| 6 | 184 | RBASE_DISCINF | RBASE - Distribution-Customer-Service & Info | - | - |
| 7 | 185 | RBASE_DISCOTH | RBASE - Distribution-Customer-Other | 0.01697 | 0.42301 |
| 8 | 186 | | | | |
| 9 | 187 | | | | |
| 10 | 188 | TOTAL_O&M_PROD | Total O&M Expense - Production-Demand | 0.000 | 0.001 |
| 11 | 189 | TOTAL_O&M_PROEF | Total O&M Expense - Production-Energy-Fuel | - | - |
| 12 | 190 | TOTAL_O&M_PROENF | Total O&M Expense - Production-Energy-Non-Fuel | 0.001 | 0.004 |
| 13 | 191 | TOTAL_O&M_STO_PRO_D | Total O&M Expense - Storage-Production-Demand | 0.000 | 0.001 |
| 14 | 192 | TOTAL_O&M_STO_TRA_D | Total O&M Expense - Storage-Transmission-Demand | 0.001 | 0.002 |
| 15 | 193 | TOTAL_O&M_STO_DIS_DSUB | Total O&M Expense - Storage-Distribution-Demand-Subs | 0.002 | 0.006 |
| 16 | 194 | TOTAL_O&M_STO_DIS_DPRI | Total O&M Expense - Storage-Distribution-Demand-Primary | 0.002 | 0.007 |
| 17 | 195 | TOTAL_O&M_STO_DIS_DSEC | Total O&M Expense - Storage-Distribution-Demand-Secondary | - | - |
| 18 | 196 | TOTAL_O&M_TRAD | Total O&M Expense - Transmission-Demand | 0.001 | 0.002 |
| 19 | 197 | TOTAL_O&M_DISDSUB | Total O&M Expense - Distribution-Demand-Subs | 0.002 | 0.006 |
| 20 | 198 | TOTAL_O&M_DISDPRI | Total O&M Expense - Distribution-Demand-Primary | 0.002 | 0.007 |
| 21 | 199 | TOTAL_O&M_DISDSEC | Total O&M Expense - Distribution-Demand-Secondary | 0.002 | 0.007 |
| 22 | 200 | TOTAL_O&M_DISCSRV | Total O&M Expense - Distribution-Customer-Services | - | - |
| 23 | 201 | TOTAL_O&M_DISCMTR | Total O&M Expense - Distribution-Customer-Meters | - | - |
| 24 | 202 | TOTAL_O&M_DISCMTRR | Total O&M Expense - Distribution-Customer-Meter Reading | - | - |
| 25 | 203 | TOTAL_O&M_DISCBIL | Total O&M Expense - Distribution-Customer-Billing & Collections | - | - |
| 26 | 204 | TOTAL_O&M_DISCINF | Total O&M Expense - Distribution-Customer-Service & Info | - | - |
| 27 | 205 | TOTAL_O&M_DISCOTH | Total O&M Expense - Distribution-Customer-Other | 0.014 | 0.044 |
| 28 | | | | | |
| 29 | | **ALLOCATION DETERMINANT TABLES** | | | |
| 30 | | **INDEPENDENT ALLOCATORS** | | | |
| 31 | 1 | RH_DEMAND | Risk Hour Demand | 8 | 21 |
| 32 | 2 | TRANS_12CP | Transmission Demand (based on 12CP) | 17 | 44 |
| 33 | 3 | NCP | Max Non Coincident Peak | 4 | 13 |
| 34 | 4 | NCP_SUBS | Max Non Coincident Peak - Substation Level | 4 | 13 |
| 35 | 5 | NCP_PRI | Max Non Coincident Peak - Primary Level | 4 | 13 |
| 36 | 6 | NCP_SEC | Max Non Coincident Peak - Secondary Level | 4 | 13 |
| 37 | 7 | STORAGE_3S1W | 4CP Demand at Storage Dispatch Peak Hours | - | - |
| 38 | 8 | AVGDEMAND | Average Demand | 1,415 | 3,820 |
| 39 | 9 | ENERGY | Energy - kWh at Generation (used for Base Fuel Items) | 12,398,002 | 33,467,111 |

This schedule is sponsored by PNM Witness Larkin

**PUBLIC SERVICE OF NEW MEXICO**
**Base Period Ending June 30th, 2026**

| Line No. | Factor No. | Class_Factors | | dule 20-Customer O<br>Streetlighting |
|---|---|---|---|---|
| 1 | 179 | RBASE_DISDSEC | RBASE - Distribution-Demand-Secondary | 0.00000 |
| 2 | 180 | RBASE_DISCSRV | RBASE - Distribution-Customer-Services | - |
| 3 | 181 | RBASE_DISCMTR | RBASE - Distribution-Customer-Meters | - |
| 4 | 182 | RBASE_DISCMTRR | RBASE - Distribution-Customer-Meter Reading | - |
| 5 | 183 | RBASE_DISCBIL | RBASE - Distribution-Customer-Billing & Collections | - |
| 6 | 184 | RBASE_DISCINF | RBASE - Distribution-Customer-Service & Info | - |
| 7 | 185 | RBASE_DISCOTH | RBASE - Distribution-Customer-Other | (0.00000) |
| 8 | 186 | | | |
| 9 | 187 | | | |
| 10 | 188 | TOTAL_O&M_PROD | Total O&M Expense - Production-Demand | 0.000 |
| 11 | 189 | TOTAL_O&M_PROEF | Total O&M Expense - Production-Energy-Fuel | - |
| 12 | 190 | TOTAL_O&M_PROENF | Total O&M Expense - Production-Energy-Non-Fuel | - |
| 13 | 191 | TOTAL_O&M_STO_PRO_D | Total O&M Expense - Storage-Production-Demand | - |
| 14 | 192 | TOTAL_O&M_STO_TRA_D | Total O&M Expense - Storage-Transmission-Demand | - |
| 15 | 193 | TOTAL_O&M_STO_DIS_DSUB | Total O&M Expense - Storage-Distribution-Demand-Subs | - |
| 16 | 194 | TOTAL_O&M_STO_DIS_DPRI | Total O&M Expense - Storage-Distribution-Demand-Primary | - |
| 17 | 195 | TOTAL_O&M_STO_DIS_DSEC | Total O&M Expense - Storage-Distribution-Demand-Secondary | - |
| 18 | 196 | TOTAL_O&M_TRAD | Total O&M Expense - Transmission-Demand | 0.000 |
| 19 | 197 | TOTAL_O&M_DISDSUB | Total O&M Expense - Distribution-Demand-Subs | 0.000 |
| 20 | 198 | TOTAL_O&M_DISDPRI | Total O&M Expense - Distribution-Demand-Primary | 0.000 |
| 21 | 199 | TOTAL_O&M_DISDSEC | Total O&M Expense - Distribution-Demand-Secondary | 0.000 |
| 22 | 200 | TOTAL_O&M_DISCSRV | Total O&M Expense - Distribution-Customer-Services | - |
| 23 | 201 | TOTAL_O&M_DISCMTR | Total O&M Expense - Distribution-Customer-Meters | - |
| 24 | 202 | TOTAL_O&M_DISCMTRR | Total O&M Expense - Distribution-Customer-Meter Reading | - |
| 25 | 203 | TOTAL_O&M_DISCBIL | Total O&M Expense - Distribution-Customer-Billing & Collections | - |
| 26 | 204 | TOTAL_O&M_DISCINF | Total O&M Expense - Distribution-Customer-Service & Info | - |
| 27 | 205 | TOTAL_O&M_DISCOTH | Total O&M Expense - Distribution-Customer-Other | 0.000 |
| 28 | | | | |
| 29 | | **ALLOCATION DETERMINANT TABLES** | | |
| 30 | | **INDEPENDENT ALLOCATORS** | | |
| 31 | 1 | RH_DEMAND | Risk Hour Demand | - |
| 32 | 2 | TRANS_12CP | Transmission Demand (based on 12CP) | - |
| 33 | 3 | NCP | Max Non Coincident Peak | - |
| 34 | 4 | NCP_SUBS | Max Non Coincident Peak - Substation Level | - |
| 35 | 5 | NCP_PRI | Max Non Coincident Peak - Primary Level | - |
| 36 | 6 | NCP_SEC | Max Non Coincident Peak - Secondary Level | - |
| 37 | 7 | STORAGE_3S1W | 4CP Demand at Storage Dispatch Peak Hours | - |
| 38 | 8 | AVGDEMAND | Average Demand | - |
| 39 | 9 | ENERGY | Energy - kWh at Generation (used for Base Fuel Items) | - |

This schedule is sponsored by PNM Witness Larkin

**PUBLIC SERVICE OF NEW MEXICO**
**Base Period Ending June 30th, 2026**

| Class_Factors Line No. | Factor No. | | | Other Input | |
|---|---|---|---|---|---|
| 40 | 10 | ENERGY3 | ANNUAL KWH SALES @ METER (excl 36B) | | |
| 41 | 11 | ENERGY4 | Energy - kWh at Meter (Non-renewable only) | | |
| 42 | 12 | FUELREV | Current Fuel Revenues | Fuel Revenue | |
| 43 | 13 | REV | Current Non Fuel Revenues | Non Fuel Revenue | |
| 44 | 14 | CUST371 | Installation on Customer Premises - Direct Assignment | | |
| 45 | 15 | CUST373 | Street Lighting and Signal Systems - Direct Assignment | | |
| 46 | 16 | CUST_DEP | Customer Deposits | | |
| 47 | 17 | NFREV | Non-Fuel Revenues | | |
| 48 | 18 | ST_LIGHTS | Streetlight Energy - kWh at generation | | |
| 49 | 19 | CUST902 | 902-Meter Reading Expenses | | |
| 50 | 20 | CUST903 | 903-Customer Records and Collection Expenses | | |
| 51 | 21 | _EXP904 | Uncollectible Percentages | | |
| 52 | | SERVICES | Number of Services | | |
| 53 | | SVCCOST | Marginal Capital Cost for Secondary Service | | |
| 54 | 22 | WTD_SERV | Customer Weighted Service Costs | | |
| 55 | | | Number of Meters | | |
| 56 | | MTRCOST | Marginal Capital Cost for Meters | | |
| 57 | 23 | WTD_METE | Customer Weighted Meter Costs | | |
| 58 | 24 | CUSTS | Annual Number of Customers | | |
| 59 | | | Annual Customers | | 80.00% |
| 60 | | | Annual kWh @ Meter | | 20.00% |
| 61 | 25 | CUSTEXP | Weighted Customer/Energy Allocator | | |
| 62 | 26 | 36B_Dedicated | Dedicated 36B Allocator | | |
| 63 | 27 | | | | |
| 64 | | | | | |
| 65 | | | | | |
| 66 | | **DEPENDENT ALLOCATORS** | | | |
| 67 | 19 | NP_PRO_DTOT | Net Plant with GI - Production-Demand | | |
| 68 | 20 | NP_PRO_EFTOT | Net Plant with GI - Production-Energy-Fuel | | |
| 69 | 21 | NP_PRO_ENFTOT | Net Plant with GI - Production-Energy-Non-Fuel | | |
| 70 | 22 | NP_STO_PRO_DTOT | Net Plant with GI - Storage-Production-Demand | | |
| 71 | 23 | NP_STO_TRA_DTOT | Net Plant with GI - Storage-Transmission-Demand | | |
| 72 | 24 | NP_STO_DIS_DSUBTOT | Net Plant with GI - Storage-Distribution-Demand-Subs | | |
| 73 | 25 | NP_STO_DIS_DPRITOT | Net Plant with GI - Storage-Distribution-Demand-Primary | | |
| 74 | 26 | NP_STO_DIS_DSECTOT | Net Plant with GI - Storage-Distribution-Demand-Secondary | | |
| 75 | 27 | NP_TRA_DTOT | Net Plant with GI - Transmission-Demand | | |
| 76 | 28 | NP_DIS_DSUBTOT | Net Plant with GI - Distribution-Demand-Subs | | |
| 77 | 29 | NP_DIS_DPRITOT | Net Plant with GI - Distribution-Demand-Primary | | |
| 78 | 30 | NP_DIS_DSECTOT | Net Plant with GI - Distribution-Demand-Secondary | | |

This schedule is sponsored by PNM Witness Larkin

**PUBLIC SERVICE OF NEW MEXICO**
**Base Period Ending June 30th, 2026**

| Class_Factors Line No. | Factor No. | | | PNM Retail | Schedule 1 Residential |
|---|---|---|---|---|---|
| 40 | 10 | ENERGY3 | ANNUAL KWH SALES @ METER (excl 36B) | 9,730,359,257 | 3,250,481,865 |
| 41 | 11 | ENERGY4 | Energy - kWh at Meter (Non-renewable only) | 6,953,398,507 | 2,681,807,976 |
| 42 | 12 | FUELREV | Current Fuel Revenues | 212,695,317 | 73,761,234 |
| 43 | 13 | REV | Current Non Fuel Revenues | 857,604,015 | 412,240,027 |
| 44 | 14 | CUST371 | Installation on Customer Premises - Direct Assignment | 1 | - |
| 45 | 15 | CUST373 | Street Lighting and Signal Systems - Direct Assignment | 1 | - |
| 46 | 16 | CUST_DEP | Customer Deposits | (515,727) | (447,428) |
| 47 | 17 | NFREV | Non-Fuel Revenues | 857,604,015 | 412,240,027 |
| 48 | 18 | ST_LIGHTS | Streetlight Energy - kWh at generation | 45,865,113 | - |
| 49 | 19 | CUST902 | 902-Meter Reading Expenses | 560,347 | 501,085 |
| 50 | 20 | CUST903 | 903-Customer Records and Collection Expenses | 560,347 | 501,085 |
| 51 | 21 | _EXP904 | Uncollectible Percentages | 1.00000 | 87.58% |
| 52 | | SERVICES | Number of Services | 147,236 | 117,902 |
| 53 | | SVCCOST | Marginal Capital Cost for Secondary Service | 497 | 568 |
| 54 | 22 | WTD_SERV | Customer Weighted Service Costs | 73,245,812 | 66,968,336 |
| 55 | | | Number of Meters | 560,347 | 501,085 |
| 56 | | MTRCOST | Marginal Capital Cost for Meters | 163 | 117 |
| 57 | 23 | WTD_METE | Customer Weighted Meter Costs | 91,420,422 | 58,857,444 |
| 58 | 24 | CUSTS | Annual Number of Customers | 560,347 | 501,085 |
| 59 | | | Annual Customers | 0.80000 | 0.71539 |
| 60 | | | Annual kWh @ Meter | 0.20000 | 0.07714 |
| 61 | 25 | CUSTEXP | Weighted Customer/Energy Allocator | 1.00000 | 0.79253 |
| 62 | 26 | 36B_Dedicated | Dedicated 36B Allocator | 1.00000 | - |
| 63 | 27 | | | | |
| 64 | | | | | |
| 65 | | | | | |
| 66 | | **DEPENDENT ALLOCATORS** | | | |
| 67 | 19 | NP_PRO_DTOT | Net Plant with GI - Production-Demand | 1,077,520,148 | 542,994,504 |
| 68 | 20 | NP_PRO_EFTOT | Net Plant with GI - Production-Energy-Fuel | - | - |
| 69 | 21 | NP_PRO_ENFTOT | Net Plant with GI - Production-Energy-Non-Fuel | - | - |
| 70 | 22 | NP_STO_PRO_DTOT | Net Plant with GI - Storage-Production-Demand | 78,121,173 | 39,367,586 |
| 71 | 23 | NP_STO_TRA_DTOT | Net Plant with GI - Storage-Transmission-Demand | 64,353,324 | 27,801,376 |
| 72 | 24 | NP_STO_DIS_DSUBTOT | Net Plant with GI - Storage-Distribution-Demand-Subs | 2,072,228 | 1,061,073 |
| 73 | 25 | NP_STO_DIS_DPRITOT | Net Plant with GI - Storage-Distribution-Demand-Primary | 5,238,227 | 2,824,092 |
| 74 | 26 | NP_STO_DIS_DSECTOT | Net Plant with GI - Storage-Distribution-Demand-Secondary | - | - |
| 75 | 27 | NP_TRA_DTOT | Net Plant with GI - Transmission-Demand | 656,427,768 | 283,584,346 |
| 76 | 28 | NP_DIS_DSUBTOT | Net Plant with GI - Distribution-Demand-Subs | 335,306,389 | 171,691,808 |
| 77 | 29 | NP_DIS_DPRITOT | Net Plant with GI - Distribution-Demand-Primary | 847,451,535 | 456,887,566 |
| 78 | 30 | NP_DIS_DSECTOT | Net Plant with GI - Distribution-Demand-Secondary | 396,034,043 | 236,152,796 |

This schedule is sponsored by PNM Witness Larkin

**PUBLIC SERVICE OF NEW MEXICO**
**Base Period Ending June 30th, 2026**

| Class_Factors Line No. | Factor No. | | | Schedule 1B Residential | Schedule 2 Small Power |
|---|---|---|---|---|---|
| 40 | 10 | ENERGY3 | ANNUAL KWH SALES @ METER (excl 36B) | - | 960,997,406 |
| 41 | 11 | ENERGY4 | Energy - kWh at Meter (Non-renewable only) | - | 792,350,234 |
| 42 | 12 | FUELREV | Current Fuel Revenues | - | 21,793,033 |
| 43 | 13 | REV | Current Non Fuel Revenues | - | 105,681,708 |
| 44 | 14 | CUST371 | Installation on Customer Premises - Direct Assignment | - | - |
| 45 | 15 | CUST373 | Street Lighting and Signal Systems - Direct Assignment | - | - |
| 46 | 16 | CUST_DEP | Customer Deposits | - | (28,591) |
| 47 | 17 | NFREV | Non-Fuel Revenues | - | 105,681,708 |
| 48 | 18 | ST_LIGHTS | Streetlight Energy - kWh at generation | - | - |
| 49 | 19 | CUST902 | 902-Meter Reading Expenses | - | 54,267 |
| 50 | 20 | CUST903 | 903-Customer Records and Collection Expenses | - | 54,267 |
| 51 | 21 | _EXP904 | Uncollectible Percentages | 0.00% | 4.19% |
| 52 | | SERVICES | Number of Services | - | 29,334 |
| 53 | | SVCCOST | Marginal Capital Cost for Secondary Service | - | 214 |
| 54 | 22 | WTD_SERV | Customer Weighted Service Costs | - | 6,277,476 |
| 55 | | | Number of Meters | - | 54,267 |
| 56 | | MTRCOST | Marginal Capital Cost for Meters | - | 352 |
| 57 | 23 | WTD_METE | Customer Weighted Meter Costs | - | 19,082,991 |
| 58 | 24 | CUSTS | Annual Number of Customers | - | 54,267 |
| 59 | | | Annual Customers | - | 0.07748 |
| 60 | | | Annual kWh @ Meter | - | 0.02279 |
| 61 | 25 | CUSTEXP | Weighted Customer/Energy Allocator | - | 0.10027 |
| 62 | 26 | 36B_Dedicated | Dedicated 36B Allocator | - | - |
| 63 | 27 | | | | |
| 64 | | | | | |
| 65 | | | | | |
| 66 | | **DEPENDENT ALLOCATORS** | | | |
| 67 | 19 | NP_PRO_DTOT | Net Plant with GI - Production-Demand | 0 | 122,167,950 |
| 68 | 20 | NP_PRO_EFTOT | Net Plant with GI - Production-Energy-Fuel | - | - |
| 69 | 21 | NP_PRO_ENFTOT | Net Plant with GI - Production-Energy-Non-Fuel | - | - |
| 70 | 22 | NP_STO_PRO_DTOT | Net Plant with GI - Storage-Production-Demand | - | 8,857,285 |
| 71 | 23 | NP_STO_TRA_DTOT | Net Plant with GI - Storage-Transmission-Demand | - | 6,415,322 |
| 72 | 24 | NP_STO_DIS_DSUBTOT | Net Plant with GI - Storage-Distribution-Demand-Subs | - | 256,333 |
| 73 | 25 | NP_STO_DIS_DPRITOT | Net Plant with GI - Storage-Distribution-Demand-Primary | - | 682,241 |
| 74 | 26 | NP_STO_DIS_DSECTOT | Net Plant with GI - Storage-Distribution-Demand-Secondary | - | - |
| 75 | 27 | NP_TRA_DTOT | Net Plant with GI - Transmission-Demand | 0 | 65,438,664 |
| 76 | 28 | NP_DIS_DSUBTOT | Net Plant with GI - Distribution-Demand-Subs | 0 | 41,477,097 |
| 77 | 29 | NP_DIS_DPRITOT | Net Plant with GI - Distribution-Demand-Primary | 0 | 110,374,341 |
| 78 | 30 | NP_DIS_DSECTOT | Net Plant with GI - Distribution-Demand-Secondary | 0 | 57,049,504 |

This schedule is sponsored by PNM Witness Larkin

**PUBLIC SERVICE OF NEW MEXICO**
**Base Period Ending June 30th, 2026**

| Class_Factors Line No. | Factor No. | | | Schedule 2B Small Power | Schedule 3B General Power |
|---|---|---|---|---|---|
| 40 | 10 | ENERGY3 | ANNUAL KWH SALES @ METER (excl 36B) | - | 1,404,746,448 |
| 41 | 11 | ENERGY4 | Energy - kWh at Meter (Non-renewable only) | - | 1,157,551,705 |
| 42 | 12 | FUELREV | Current Fuel Revenues | - | 31,837,642 |
| 43 | 13 | REV | Current Non Fuel Revenues | - | 114,351,129 |
| 44 | 14 | CUST371 | Installation on Customer Premises - Direct Assignment | - | - |
| 45 | 15 | CUST373 | Street Lighting and Signal Systems - Direct Assignment | - | - |
| 46 | 16 | CUST_DEP | Customer Deposits | - | (39,708) |
| 47 | 17 | NFREV | Non-Fuel Revenues | - | 114,351,129 |
| 48 | 18 | ST_LIGHTS | Streetlight Energy - kWh at generation | - | - |
| 49 | 19 | CUST902 | 902-Meter Reading Expenses | - | 2,812 |
| 50 | 20 | CUST903 | 903-Customer Records and Collection Expenses | - | 2,812 |
| 51 | 21 | _EXP904 | Uncollectible Percentages | 0.00% | 5.82% |
| 52 | | SERVICES | Number of Services | - | - |
| 53 | | SVCCOST | Marginal Capital Cost for Secondary Service | - | - |
| 54 | 22 | WTD_SERV | Customer Weighted Service Costs | - | - |
| 55 | | | Number of Meters | - | 2,812 |
| 56 | | MTRCOST | Marginal Capital Cost for Meters | - | 2,040 |
| 57 | 23 | WTD_METE | Customer Weighted Meter Costs | - | 5,735,693 |
| 58 | 24 | CUSTS | Annual Number of Customers | - | 2,812 |
| 59 | | | Annual Customers | - | 0.00401 |
| 60 | | | Annual kWh @ Meter | - | 0.03329 |
| 61 | 25 | CUSTEXP | Weighted Customer/Energy Allocator | - | 0.03731 |
| 62 | 26 | 36B_Dedicated | Dedicated 36B Allocator | - | - |
| 63 | 27 | | | | |
| 64 | | | | | |
| 65 | | | | | |
| 66 | | **DEPENDENT ALLOCATORS** | | | |
| 67 | 19 | NP_PRO_DTOT | Net Plant with GI - Production-Demand | 0 | 178,000,414 |
| 68 | 20 | NP_PRO_EFTOT | Net Plant with GI - Production-Energy-Fuel | - | - |
| 69 | 21 | NP_PRO_ENFTOT | Net Plant with GI - Production-Energy-Non-Fuel | - | - |
| 70 | 22 | NP_STO_PRO_DTOT | Net Plant with GI - Storage-Production-Demand | - | 12,905,189 |
| 71 | 23 | NP_STO_TRA_DTOT | Net Plant with GI - Storage-Transmission-Demand | - | 9,513,773 |
| 72 | 24 | NP_STO_DIS_DSUBTOT | Net Plant with GI - Storage-Distribution-Demand-Subs | - | 310,562 |
| 73 | 25 | NP_STO_DIS_DPRITOT | Net Plant with GI - Storage-Distribution-Demand-Primary | - | 826,573 |
| 74 | 26 | NP_STO_DIS_DSECTOT | Net Plant with GI - Storage-Distribution-Demand-Secondary | - | - |
| 75 | 27 | NP_TRA_DTOT | Net Plant with GI - Transmission-Demand | 0 | 97,044,014 |
| 76 | 28 | NP_DIS_DSUBTOT | Net Plant with GI - Distribution-Demand-Subs | 0 | 50,251,853 |
| 77 | 29 | NP_DIS_DPRITOT | Net Plant with GI - Distribution-Demand-Primary | 0 | 133,724,766 |
| 78 | 30 | NP_DIS_DSECTOT | Net Plant with GI - Distribution-Demand-Secondary | 0 | 69,118,706 |

This schedule is sponsored by PNM Witness Larkin

**PUBLIC SERVICE OF NEW MEXICO**
**Base Period Ending June 30th, 2026**

| Class_Factors Line No. | Factor No. | | | Schedule 3C GP Low LF | Schedule 3D General Power Gov |
|---|---|---|---|---|---|
| 40 | 10 | ENERGY3 | ANNUAL KWH SALES @ METER (excl 36B) | 317,813,761 | 100,376,217 |
| 41 | 11 | ENERGY4 | Energy - kWh at Meter (Non-renewable only) | 262,318,207 | 82,882,080 |
| 42 | 12 | FUELREV | Current Fuel Revenues | 7,214,877 | 2,279,613 |
| 43 | 13 | REV | Current Non Fuel Revenues | 31,660,745 | 7,890,538 |
| 44 | 14 | CUST371 | Installation on Customer Premises - Direct Assignment | - | - |
| 45 | 15 | CUST373 | Street Lighting and Signal Systems - Direct Assignment | - | - |
| 46 | 16 | CUST_DEP | Customer Deposits | - | - |
| 47 | 17 | NFREV | Non-Fuel Revenues | 31,660,745 | 7,890,538 |
| 48 | 18 | ST_LIGHTS | Streetlight Energy - kWh at generation | - | - |
| 49 | 19 | CUST902 | 902-Meter Reading Expenses | 1,233 | 174 |
| 50 | 20 | CUST903 | 903-Customer Records and Collection Expenses | 1,233 | 174 |
| 51 | 21 | _EXP904 | Uncollectible Percentages | 2.40% | 0.00% |
| 52 | | SERVICES | Number of Services | - | - |
| 53 | | SVCCOST | Marginal Capital Cost for Secondary Service | - | - |
| 54 | 22 | WTD_SERV | Customer Weighted Service Costs | - | - |
| 55 | | | Number of Meters | 1,233 | 174 |
| 56 | | MTRCOST | Marginal Capital Cost for Meters | 2,040 | 2,040 |
| 57 | 23 | WTD_METE | Customer Weighted Meter Costs | 2,514,975 | 354,911 |
| 58 | 24 | CUSTS | Annual Number of Customers | 1,233 | 174 |
| 59 | | | Annual Customers | 0.00176 | 0.00025 |
| 60 | | | Annual kWh @ Meter | 0.00755 | 0.00238 |
| 61 | 25 | CUSTEXP | Weighted Customer/Energy Allocator | 0.00931 | 0.00263 |
| 62 | 26 | 36B_Dedicated | Dedicated 36B Allocator | - | - |
| 63 | 27 | | | | |
| 64 | | | | | |
| 65 | | | | | |
| 66 | | **DEPENDENT ALLOCATORS** | | | |
| 67 | 19 | NP_PRO_DTOT | Net Plant with GI - Production-Demand | 37,563,312 | 12,075,103 |
| 68 | 20 | NP_PRO_EFTOT | Net Plant with GI - Production-Energy-Fuel | - | - |
| 69 | 21 | NP_PRO_ENFTOT | Net Plant with GI - Production-Energy-Non-Fuel | - | - |
| 70 | 22 | NP_STO_PRO_DTOT | Net Plant with GI - Storage-Production-Demand | 2,723,374 | 875,456 |
| 71 | 23 | NP_STO_TRA_DTOT | Net Plant with GI - Storage-Transmission-Demand | 1,927,642 | 653,002 |
| 72 | 24 | NP_STO_DIS_DSUBTOT | Net Plant with GI - Storage-Distribution-Demand-Subs | 95,190 | 20,852 |
| 73 | 25 | NP_STO_DIS_DPRITOT | Net Plant with GI - Storage-Distribution-Demand-Primary | 253,351 | 55,499 |
| 74 | 26 | NP_STO_DIS_DSECTOT | Net Plant with GI - Storage-Distribution-Demand-Secondary | - | - |
| 75 | 27 | NP_TRA_DTOT | Net Plant with GI - Transmission-Demand | 19,662,665 | 6,660,867 |
| 76 | 28 | NP_DIS_DSUBTOT | Net Plant with GI - Distribution-Demand-Subs | 15,402,606 | 3,374,094 |
| 77 | 29 | NP_DIS_DPRITOT | Net Plant with GI - Distribution-Demand-Primary | 40,987,740 | 8,978,772 |
| 78 | 30 | NP_DIS_DSECTOT | Net Plant with GI - Distribution-Demand-Secondary | 21,185,452 | 4,640,884 |

This schedule is sponsored by PNM Witness Larkin

**PUBLIC SERVICE OF NEW MEXICO**
**Base Period Ending June 30th, 2026**

| Class_Factors Line No. | Factor No. | | | Schedule 3E GP Low LF Gov |
|---|---|---|---|---|
| 40 | 10 | ENERGY3 | ANNUAL KWH SALES @ METER (excl 36B) | 23,680,787 |
| 41 | 11 | ENERGY4 | Energy - kWh at Meter (Non-renewable only) | 19,539,806 |
| 42 | 12 | FUELREV | Current Fuel Revenues | 537,429 |
| 43 | 13 | REV | Current Non Fuel Revenues | 2,494,518 |
| 44 | 14 | CUST371 | Installation on Customer Premises - Direct Assignment | - |
| 45 | 15 | CUST373 | Street Lighting and Signal Systems - Direct Assignment | - |
| 46 | 16 | CUST_DEP | Customer Deposits | - |
| 47 | 17 | NFREV | Non-Fuel Revenues | 2,494,518 |
| 48 | 18 | ST_LIGHTS | Streetlight Energy - kWh at generation | - |
| 49 | 19 | CUST902 | 902-Meter Reading Expenses | 72 |
| 50 | 20 | CUST903 | 903-Customer Records and Collection Expenses | 72 |
| 51 | 21 | _EXP904 | Uncollectible Percentages | 0.00% |
| 52 | | SERVICES | Number of Services | - |
| 53 | | SVCCOST | Marginal Capital Cost for Secondary Service | - |
| 54 | 22 | WTD_SERV | Customer Weighted Service Costs | - |
| 55 | | | Number of Meters | 72 |
| 56 | | MTRCOST | Marginal Capital Cost for Meters | 2,040 |
| 57 | 23 | WTD_METE | Customer Weighted Meter Costs | 146,860 |
| 58 | 24 | CUSTS | Annual Number of Customers | 72 |
| 59 | | | Annual Customers | 0.00010 |
| 60 | | | Annual kWh @ Meter | 0.00056 |
| 61 | 25 | CUSTEXP | Weighted Customer/Energy Allocator | 0.00066 |
| 62 | 26 | 36B_Dedicated | Dedicated 36B Allocator | - |
| 63 | 27 | | | |
| 64 | | | | |
| 65 | | | | |
| 66 | | **DEPENDENT ALLOCATORS** | | |
| 67 | 19 | NP_PRO_DTOT | Net Plant with GI - Production-Demand | 3,097,515 |
| 68 | 20 | NP_PRO_EFTOT | Net Plant with GI - Production-Energy-Fuel | - |
| 69 | 21 | NP_PRO_ENFTOT | Net Plant with GI - Production-Energy-Non-Fuel | - |
| 70 | 22 | NP_STO_PRO_DTOT | Net Plant with GI - Storage-Production-Demand | 224,573 |
| 71 | 23 | NP_STO_TRA_DTOT | Net Plant with GI - Storage-Transmission-Demand | 155,166 |
| 72 | 24 | NP_STO_DIS_DSUBTOT | Net Plant with GI - Storage-Distribution-Demand-Subs | 8,539 |
| 73 | 25 | NP_STO_DIS_DPRITOT | Net Plant with GI - Storage-Distribution-Demand-Primary | 22,726 |
| 74 | 26 | NP_STO_DIS_DSECTOT | Net Plant with GI - Storage-Distribution-Demand-Secondary | - |
| 75 | 27 | NP_TRA_DTOT | Net Plant with GI - Transmission-Demand | 1,582,749 |
| 76 | 28 | NP_DIS_DSUBTOT | Net Plant with GI - Distribution-Demand-Subs | 1,381,632 |
| 77 | 29 | NP_DIS_DPRITOT | Net Plant with GI - Distribution-Demand-Primary | 3,676,648 |
| 78 | 30 | NP_DIS_DSECTOT | Net Plant with GI - Distribution-Demand-Secondary | 1,900,360 |

This schedule is sponsored by PNM Witness Larkin

**PUBLIC SERVICE OF NEW MEXICO**
**Base Period Ending June 30th, 2026**

| Line No. | Class_Factors Factor No. | | | Schedule 3F GP Charging Stations | Schedule 4 Large Power |
|---|---|---|---|---|---|
| 40 | 10 | ENERGY3 | ANNUAL KWH SALES @ METER (excl 36B) | 6,775,436 | 838,553,439 |
| 41 | 11 | ENERGY4 | Energy - kWh at Meter (Non-renewable only) | 5,592,317 | 690,608,690 |
| 42 | 12 | FUELREV | Current Fuel Revenues | 153,813 | 18,994,704 |
| 43 | 13 | REV | Current Non Fuel Revenues | 609,672 | 54,808,606 |
| 44 | 14 | CUST371 | Installation on Customer Premises - Direct Assignment | - | - |
| 45 | 15 | CUST373 | Street Lighting and Signal Systems - Direct Assignment | - | - |
| 46 | 16 | CUST_DEP | Customer Deposits | - | - |
| 47 | 17 | NFREV | Non-Fuel Revenues | 609,672 | 54,808,606 |
| 48 | 18 | ST_LIGHTS | Streetlight Energy - kWh at generation | - | - |
| 49 | 19 | CUST902 | 902-Meter Reading Expenses | 16 | 175 |
| 50 | 20 | CUST903 | 903-Customer Records and Collection Expenses | 16 | 175 |
| 51 | 21 | _EXP904 | Uncollectible Percentages | 0.00% | 0.00% |
| 52 | | SERVICES | Number of Services | - | - |
| 53 | | SVCCOST | Marginal Capital Cost for Secondary Service | - | - |
| 54 | 22 | WTD_SERV | Customer Weighted Service Costs | - | - |
| 55 | | | Number of Meters | 16 | 175 |
| 56 | | MTRCOST | Marginal Capital Cost for Meters | 2,040 | 10,888 |
| 57 | 23 | WTD_METE | Customer Weighted Meter Costs | 32,636 | 1,905,412 |
| 58 | 24 | CUSTS | Annual Number of Customers | 16 | 175 |
| 59 | | | Annual Customers | 0.00002 | 0.00025 |
| 60 | | | Annual kWh @ Meter | 0.00016 | 0.01986 |
| 61 | 25 | CUSTEXP | Weighted Customer/Energy Allocator | 0.00018 | 0.02011 |
| 62 | 26 | 36B_Dedicated | Dedicated 36B Allocator | - | - |
| 63 | 27 | | | | |
| 64 | | | | | |
| 65 | | | | | |
| 66 | | **DEPENDENT ALLOCATORS** | | | |
| 67 | 19 | NP_PRO_DTOT | Net Plant with GI - Production-Demand | 750,483 | 88,914,399 |
| 68 | 20 | NP_PRO_EFTOT | Net Plant with GI - Production-Energy-Fuel | - | - |
| 69 | 21 | NP_PRO_ENFTOT | Net Plant with GI - Production-Energy-Non-Fuel | - | - |
| 70 | 22 | NP_STO_PRO_DTOT | Net Plant with GI - Storage-Production-Demand | 54,411 | 6,446,373 |
| 71 | 23 | NP_STO_TRA_DTOT | Net Plant with GI - Storage-Transmission-Demand | 34,821 | 4,731,642 |
| 72 | 24 | NP_STO_DIS_DSUBTOT | Net Plant with GI - Storage-Distribution-Demand-Subs | 3,611 | 141,347 |
| 73 | 25 | NP_STO_DIS_DPRITOT | Net Plant with GI - Storage-Distribution-Demand-Primary | 9,612 | 376,201 |
| 74 | 26 | NP_STO_DIS_DSECTOT | Net Plant with GI - Storage-Distribution-Demand-Secondary | - | - |
| 75 | 27 | NP_TRA_DTOT | Net Plant with GI - Transmission-Demand | 355,183 | 48,264,503 |
| 76 | 28 | NP_DIS_DSUBTOT | Net Plant with GI - Distribution-Demand-Subs | 584,375 | 22,871,310 |
| 77 | 29 | NP_DIS_DPRITOT | Net Plant with GI - Distribution-Demand-Primary | 1,555,075 | 60,862,644 |
| 78 | 30 | NP_DIS_DSECTOT | Net Plant with GI - Distribution-Demand-Secondary | 803,776 | - |

This schedule is sponsored by PNM Witness Larkin

**PUBLIC SERVICE OF NEW MEXICO**
**Base Period Ending June 30th, 2026**

| Class_Factors Line No. | Factor No. | | | Schedule 5 Industrial Power | Schedule 10 Irrigation |
|---|---|---|---|---|---|
| 40 | 10 | ENERGY3 | ANNUAL KWH SALES @ METER (excl 36B) | 11,736,480 | 22,940,885 |
| 41 | 11 | ENERGY4 | Energy - kWh at Meter (Non-renewable only) | 9,690,593 | 19,089,649 |
| 42 | 12 | FUELREV | Current Fuel Revenues | 266,533 | 525,047 |
| 43 | 13 | REV | Current Non Fuel Revenues | 1,311,200 | 2,032,375 |
| 44 | 14 | CUST371 | Installation on Customer Premises - Direct Assignment | - | - |
| 45 | 15 | CUST373 | Street Lighting and Signal Systems - Direct Assignment | - | - |
| 46 | 16 | CUST_DEP | Customer Deposits | - | - |
| 47 | 17 | NFREV | Non-Fuel Revenues | 1,311,200 | 2,032,375 |
| 48 | 18 | ST_LIGHTS | Streetlight Energy - kWh at generation | - | - |
| 49 | 19 | CUST902 | 902-Meter Reading Expenses | 1 | 316 |
| 50 | 20 | CUST903 | 903-Customer Records and Collection Expenses | 1 | 316 |
| 51 | 21 | _EXP904 | Uncollectible Percentages | 0.00% | 0.00% |
| 52 | | SERVICES | Number of Services | - | - |
| 53 | | SVCCOST | Marginal Capital Cost for Secondary Service | - | - |
| 54 | 22 | WTD_SERV | Customer Weighted Service Costs | - | - |
| 55 | | | Number of Meters | 1 | 316 |
| 56 | | MTRCOST | Marginal Capital Cost for Meters | 10,888 | 2,040 |
| 57 | 23 | WTD_METE | Customer Weighted Meter Costs | 10,888 | 644,552 |
| 58 | 24 | CUSTS | Annual Number of Customers | 1 | 316 |
| 59 | | | Annual Customers | 0.00000 | 0.00045 |
| 60 | | | Annual kWh @ Meter | 0.00028 | 0.00055 |
| 61 | 25 | CUSTEXP | Weighted Customer/Energy Allocator | 0.00028 | 0.00100 |
| 62 | 26 | 36B_Dedicated | Dedicated 36B Allocator | - | - |
| 63 | 27 | | | | |
| 64 | | | | | |
| 65 | | | | | |
| 66 | | **DEPENDENT ALLOCATORS** | | | |
| 67 | 19 | NP_PRO_DTOT | Net Plant with GI - Production-Demand | 1,862,747 | 2,534,083 |
| 68 | 20 | NP_PRO_EFTOT | Net Plant with GI - Production-Energy-Fuel | - | - |
| 69 | 21 | NP_PRO_ENFTOT | Net Plant with GI - Production-Energy-Non-Fuel | - | - |
| 70 | 22 | NP_STO_PRO_DTOT | Net Plant with GI - Storage-Production-Demand | 135,051 | 183,723 |
| 71 | 23 | NP_STO_TRA_DTOT | Net Plant with GI - Storage-Transmission-Demand | 99,127 | 129,368 |
| 72 | 24 | NP_STO_DIS_DSUBTOT | Net Plant with GI - Storage-Distribution-Demand-Subs | - | 6,493 |
| 73 | 25 | NP_STO_DIS_DPRITOT | Net Plant with GI - Storage-Distribution-Demand-Primary | - | 17,280 |
| 74 | 26 | NP_STO_DIS_DSECTOT | Net Plant with GI - Storage-Distribution-Demand-Secondary | - | - |
| 75 | 27 | NP_TRA_DTOT | Net Plant with GI - Transmission-Demand | 1,011,136 | 1,319,606 |
| 76 | 28 | NP_DIS_DSUBTOT | Net Plant with GI - Distribution-Demand-Subs | - | 1,050,564 |
| 77 | 29 | NP_DIS_DPRITOT | Net Plant with GI - Distribution-Demand-Primary | - | 2,795,647 |
| 78 | 30 | NP_DIS_DSECTOT | Net Plant with GI - Distribution-Demand-Secondary | - | 1,444,994 |

This schedule is sponsored by PNM Witness Larkin

**PUBLIC SERVICE OF NEW MEXICO**
**Base Period Ending June 30th, 2026**

| Class_Factors Line No. | Factor No. | | | Schedule 11 Water & Sewage | Schedule 15 Industrial Power |
|---|---|---|---|---|---|
| 40 | 10 | ENERGY3 | ANNUAL KWH SALES @ METER (excl 36B) | 170,461,468 | 67,136,266.00 |
| 41 | 11 | ENERGY4 | Energy - kWh at Meter (Non-renewable only) | 140,814,155 | 55,844,749.10 |
| 42 | 12 | FUELREV | Current Fuel Revenues | 3,872,994 | 1,535,970.38 |
| 43 | 13 | REV | Current Non Fuel Revenues | 9,211,398 | 3,772,027.99 |
| 44 | 14 | CUST371 | Installation on Customer Premises - Direct Assignment | - | - |
| 45 | 15 | CUST373 | Street Lighting and Signal Systems - Direct Assignment | - | - |
| 46 | 16 | CUST_DEP | Customer Deposits | - | - |
| 47 | 17 | NFREV | Non-Fuel Revenues | 9,211,398 | 3,772,027.99 |
| 48 | 18 | ST_LIGHTS | Streetlight Energy - kWh at generation | - | - |
| 49 | 19 | CUST902 | 902-Meter Reading Expenses | 161 | 4.00 |
| 50 | 20 | CUST903 | 903-Customer Records and Collection Expenses | 161 | 4.00 |
| 51 | 21 | _EXP904 | Uncollectible Percentages | 0.00% | - |
| 52 | | SERVICES | Number of Services | - | - |
| 53 | | SVCCOST | Marginal Capital Cost for Secondary Service | - | - |
| 54 | 22 | WTD_SERV | Customer Weighted Service Costs | - | - |
| 55 | | | Number of Meters | 161 | 4.00 |
| 56 | | MTRCOST | Marginal Capital Cost for Meters | 10,888 | 10,888.07 |
| 57 | 23 | WTD_METE | Customer Weighted Meter Costs | 1,752,979 | 43,552.28 |
| 58 | 24 | CUSTS | Annual Number of Customers | 161 | 4.00 |
| 59 | | | Annual Customers | 0.00023 | 0.00 |
| 60 | | | Annual kWh @ Meter | 0.00405 | 0.00 |
| 61 | 25 | CUSTEXP | Weighted Customer/Energy Allocator | 0.00428 | 0.00 |
| 62 | 26 | 36B_Dedicated | Dedicated 36B Allocator | - | - |
| 63 | 27 | | | | |
| 64 | | | | | |
| 65 | | | | | |
| 66 | | **DEPENDENT ALLOCATORS** | | | |
| 67 | 19 | NP_PRO_DTOT | Net Plant with GI - Production-Demand | 9,223,124 | 6,580,863.89 |
| 68 | 20 | NP_PRO_EFTOT | Net Plant with GI - Production-Energy-Fuel | - | - |
| 69 | 21 | NP_PRO_ENFTOT | Net Plant with GI - Production-Energy-Non-Fuel | - | - |
| 70 | 22 | NP_STO_PRO_DTOT | Net Plant with GI - Storage-Production-Demand | 668,685 | 477,118.51 |
| 71 | 23 | NP_STO_TRA_DTOT | Net Plant with GI - Storage-Transmission-Demand | 596,009 | 349,397.55 |
| 72 | 24 | NP_STO_DIS_DSUBTOT | Net Plant with GI - Storage-Distribution-Demand-Subs | 47,324 | - |
| 73 | 25 | NP_STO_DIS_DPRITOT | Net Plant with GI - Storage-Distribution-Demand-Primary | 125,955 | - |
| 74 | 26 | NP_STO_DIS_DSECTOT | Net Plant with GI - Storage-Distribution-Demand-Secondary | - | - |
| 75 | 27 | NP_TRA_DTOT | Net Plant with GI - Transmission-Demand | 6,079,513 | 3,563,984.51 |
| 76 | 28 | NP_DIS_DSUBTOT | Net Plant with GI - Distribution-Demand-Subs | 7,657,466 | - |
| 77 | 29 | NP_DIS_DPRITOT | Net Plant with GI - Distribution-Demand-Primary | 20,377,214 | - |
| 78 | 30 | NP_DIS_DSECTOT | Net Plant with GI - Distribution-Demand-Secondary | - | - |

This schedule is sponsored by PNM Witness Larkin

**PUBLIC SERVICE OF NEW MEXICO**
**Base Period Ending June 30th, 2026**

| Class_Factors Line No. | Factor No. | | | Schedule 30 Industrial Power | Schedule 33B Large Service |
|---|---|---|---|---|---|
| 40 | 10 | ENERGY3 | ANNUAL KWH SALES @ METER (excl 36B) | 621,332,201 | 3,089,705 |
| 41 | 11 | ENERGY4 | Energy - kWh at Meter (Non-renewable only) | 513,317,597 | 2,540,582 |
| 42 | 12 | FUELREV | Current Fuel Revenues | 14,118,438 | 69,877 |
| 43 | 13 | REV | Current Non Fuel Revenues | 25,440,427 | 193,456 |
| 44 | 14 | CUST371 | Installation on Customer Premises - Direct Assignment | - | - |
| 45 | 15 | CUST373 | Street Lighting and Signal Systems - Direct Assignment | - | - |
| 46 | 16 | CUST_DEP | Customer Deposits | - | - |
| 47 | 17 | NFREV | Non-Fuel Revenues | 25,440,427 | 193,456 |
| 48 | 18 | ST_LIGHTS | Streetlight Energy - kWh at generation | - | - |
| 49 | 19 | CUST902 | 902-Meter Reading Expenses | 14 | 2 |
| 50 | 20 | CUST903 | 903-Customer Records and Collection Expenses | 14 | 2 |
| 51 | 21 | _EXP904 | Uncollectible Percentages | 0.00% | 0.00% |
| 52 | | SERVICES | Number of Services | - | - |
| 53 | | SVCCOST | Marginal Capital Cost for Secondary Service | - | - |
| 54 | 22 | WTD_SERV | Customer Weighted Service Costs | - | - |
| 55 | | | Number of Meters | 14 | 2 |
| 56 | | MTRCOST | Marginal Capital Cost for Meters | 10,888 | 10,888 |
| 57 | 23 | WTD_METE | Customer Weighted Meter Costs | 152,433 | 21,776 |
| 58 | 24 | CUSTS | Annual Number of Customers | 14 | 2 |
| 59 | | | Annual Customers | 0.00002 | 0.00000 |
| 60 | | | Annual kWh @ Meter | 0.01476 | 0.00007 |
| 61 | 25 | CUSTEXP | Weighted Customer/Energy Allocator | 0.01478 | 0.00008 |
| 62 | 26 | 36B_Dedicated | Dedicated 36B Allocator | - | - |
| 63 | 27 | | | | |
| 64 | | | | | |
| 65 | | | | | |
| 66 | | **DEPENDENT ALLOCATORS** | | | |
| 67 | 19 | NP_PRO_DTOT | Net Plant with GI - Production-Demand | 54,449,594 | 739,549 |
| 68 | 20 | NP_PRO_EFTOT | Net Plant with GI - Production-Energy-Fuel | - | - |
| 69 | 21 | NP_PRO_ENFTOT | Net Plant with GI - Production-Energy-Non-Fuel | - | - |
| 70 | 22 | NP_STO_PRO_DTOT | Net Plant with GI - Storage-Production-Demand | 3,947,644 | 53,618 |
| 71 | 23 | NP_STO_TRA_DTOT | Net Plant with GI - Storage-Transmission-Demand | 2,885,086 | 41,558 |
| 72 | 24 | NP_STO_DIS_DSUBTOT | Net Plant with GI - Storage-Distribution-Demand-Subs | 79,554 | - |
| 73 | 25 | NP_STO_DIS_DPRITOT | Net Plant with GI - Storage-Distribution-Demand-Primary | - | - |
| 74 | 26 | NP_STO_DIS_DSECTOT | Net Plant with GI - Storage-Distribution-Demand-Secondary | - | - |
| 75 | 27 | NP_TRA_DTOT | Net Plant with GI - Transmission-Demand | 29,428,943 | 423,904 |
| 76 | 28 | NP_DIS_DSUBTOT | Net Plant with GI - Distribution-Demand-Subs | 12,872,652 | - |
| 77 | 29 | NP_DIS_DPRITOT | Net Plant with GI - Distribution-Demand-Primary | - | - |
| 78 | 30 | NP_DIS_DSECTOT | Net Plant with GI - Distribution-Demand-Secondary | - | - |

This schedule is sponsored by PNM Witness Larkin

**PUBLIC SERVICE OF NEW MEXICO**
**Base Period Ending June 30th, 2026**

| Class_Factors Line No. | Factor No. | | | Schedule 35B Lg Power Service | Schedule 36B Special Service Rate |
|---|---|---|---|---|---|
| 40 | 10 | ENERGY3 | ANNUAL KWH SALES @ METER (excl 36B) | 154,641,451 | 1,733,213,257 |
| 41 | 11 | ENERGY4 | Energy - kWh at Meter (Non-renewable only) | 127,103,568 | 357,402,040 |
| 42 | 12 | FUELREV | Current Fuel Revenues | 3,495,894 | 31,277,094 |
| 43 | 13 | REV | Current Non Fuel Revenues | 6,279,814 | 72,130,155 |
| 44 | 14 | CUST371 | Installation on Customer Premises - Direct Assignment | - | - |
| 45 | 15 | CUST373 | Street Lighting and Signal Systems - Direct Assignment | - | - |
| 46 | 16 | CUST_DEP | Customer Deposits | - | - |
| 47 | 17 | NFREV | Non-Fuel Revenues | 6,279,814 | 72,130,155 |
| 48 | 18 | ST_LIGHTS | Streetlight Energy - kWh at generation | - | - |
| 49 | 19 | CUST902 | 902-Meter Reading Expenses | 7 | 8 |
| 50 | 20 | CUST903 | 903-Customer Records and Collection Expenses | 7 | 8 |
| 51 | 21 | _EXP904 | Uncollectible Percentages | 0.00% | 0.00% |
| 52 | | SERVICES | Number of Services | - | - |
| 53 | | SVCCOST | Marginal Capital Cost for Secondary Service | - | - |
| 54 | 22 | WTD_SERV | Customer Weighted Service Costs | - | - |
| 55 | | | Number of Meters | 7 | 8 |
| 56 | | MTRCOST | Marginal Capital Cost for Meters | 10,888 | 10,888 |
| 57 | 23 | WTD_METE | Customer Weighted Meter Costs | 76,216 | 87,105 |
| 58 | 24 | CUSTS | Annual Number of Customers | 7 | 8 |
| 59 | | | Annual Customers | 0.00001 | 0.00001 |
| 60 | | | Annual kWh @ Meter | 0.00366 | 0.01028 |
| 61 | 25 | CUSTEXP | Weighted Customer/Energy Allocator | 0.00367 | 0.01029 |
| 62 | 26 | 36B_Dedicated | Dedicated 36B Allocator | - | - |
| 63 | 27 | | | | |
| 64 | | | | | |
| 65 | | | | | |
| 66 | | **DEPENDENT ALLOCATORS** | | | |
| 67 | 19 | NP_PRO_DTOT | Net Plant with GI - Production-Demand | 15,085,755 | - |
| 68 | 20 | NP_PRO_EFTOT | Net Plant with GI - Production-Energy-Fuel | - | - |
| 69 | 21 | NP_PRO_ENFTOT | Net Plant with GI - Production-Energy-Non-Fuel | - | - |
| 70 | 22 | NP_STO_PRO_DTOT | Net Plant with GI - Storage-Production-Demand | 1,093,731 | - |
| 71 | 23 | NP_STO_TRA_DTOT | Net Plant with GI - Storage-Transmission-Demand | 770,121 | 8,044,387 |
| 72 | 24 | NP_STO_DIS_DSUBTOT | Net Plant with GI - Storage-Distribution-Demand-Subs | 24,557 | - |
| 73 | 25 | NP_STO_DIS_DPRITOT | Net Plant with GI - Storage-Distribution-Demand-Primary | - | - |
| 74 | 26 | NP_STO_DIS_DSECTOT | Net Plant with GI - Storage-Distribution-Demand-Secondary | - | - |
| 75 | 27 | NP_TRA_DTOT | Net Plant with GI - Transmission-Demand | 7,855,517 | 82,055,730 |
| 76 | 28 | NP_DIS_DSUBTOT | Net Plant with GI - Distribution-Demand-Subs | 3,973,581 | - |
| 77 | 29 | NP_DIS_DPRITOT | Net Plant with GI - Distribution-Demand-Primary | - | - |
| 78 | 30 | NP_DIS_DSECTOT | Net Plant with GI - Distribution-Demand-Secondary | - | - |

This schedule is sponsored by PNM Witness Larkin

**PUBLIC SERVICE OF NEW MEXICO**
**Base Period Ending June 30th, 2026**

| Class_Factors Line No. | Factor No. | | | Schedule 6 Priv. Area Light | Schedule 20 Streetlighting |
|---|---|---|---|---|---|
| 40 | 10 | ENERGY3 | ANNUAL KWH SALES @ METER (excl 36B) | 11,456,517 | 30,925,669 |
| 41 | 11 | ENERGY4 | Energy - kWh at Meter (Non-renewable only) | 9,446,164 | 25,498,395 |
| 42 | 12 | FUELREV | Current Fuel Revenues | 259,810 | 701,315 |
| 43 | 13 | REV | Current Non Fuel Revenues | 2,290,091 | 5,206,125 |
| 44 | 14 | CUST371 | Installation on Customer Premises - Direct Assignment | 1 | - |
| 45 | 15 | CUST373 | Street Lighting and Signal Systems - Direct Assignment | - | 1 |
| 46 | 16 | CUST_DEP | Customer Deposits | - | - |
| 47 | 17 | NFREV | Non-Fuel Revenues | 2,290,091 | 5,206,125 |
| 48 | 18 | ST_LIGHTS | Streetlight Energy - kWh at generation | 12,398,002 | 33,467,111 |
| 49 | 19 | CUST902 | 902-Meter Reading Expenses | - | - |
| 50 | 20 | CUST903 | 903-Customer Records and Collection Expenses | - | - |
| 51 | 21 | _EXP904 | Uncollectible Percentages | 0.00% | 0.00% |
| 52 | | SERVICES | Number of Services | - | - |
| 53 | | SVCCOST | Marginal Capital Cost for Secondary Service | - | - |
| 54 | 22 | WTD_SERV | Customer Weighted Service Costs | - | - |
| 55 | | | Number of Meters | - | - |
| 56 | | MTRCOST | Marginal Capital Cost for Meters | - | 352 |
| 57 | 23 | WTD_METE | Customer Weighted Meter Costs | - | - |
| 58 | 24 | CUSTS | Annual Number of Customers | - | - |
| 59 | | | Annual Customers | - | - |
| 60 | | | Annual kWh @ Meter | 0.00027 | 0.00073 |
| 61 | 25 | CUSTEXP | Weighted Customer/Energy Allocator | 0.00027 | 0.00073 |
| 62 | 26 | 36B_Dedicated | Dedicated 36B Allocator | 1 | - |
| 63 | 27 | | | | |
| 64 | | | | | |
| 65 | | | | | |
| 66 | | **DEPENDENT ALLOCATORS** | | | |
| 67 | 19 | NP_PRO_DTOT | Net Plant with GI - Production-Demand | 399,123 | 1,081,629 |
| 68 | 20 | NP_PRO_EFTOT | Net Plant with GI - Production-Energy-Fuel | - | - |
| 69 | 21 | NP_PRO_ENFTOT | Net Plant with GI - Production-Energy-Non-Fuel | - | - |
| 70 | 22 | NP_STO_PRO_DTOT | Net Plant with GI - Storage-Production-Demand | 28,937 | 78,419 |
| 71 | 23 | NP_STO_TRA_DTOT | Net Plant with GI - Storage-Transmission-Demand | 56,514 | 149,012 |
| 72 | 24 | NP_STO_DIS_DSUBTOT | Net Plant with GI - Storage-Distribution-Demand-Subs | 3,797 | 12,996 |
| 73 | 25 | NP_STO_DIS_DPRITOT | Net Plant with GI - Storage-Distribution-Demand-Primary | 10,107 | 34,590 |
| 74 | 26 | NP_STO_DIS_DSECTOT | Net Plant with GI - Storage-Distribution-Demand-Secondary | - | - |
| 75 | 27 | NP_TRA_DTOT | Net Plant with GI - Transmission-Demand | 576,466 | 1,519,976 |
| 76 | 28 | NP_DIS_DSUBTOT | Net Plant with GI - Distribution-Demand-Subs | 614,462 | 2,102,890 |
| 77 | 29 | NP_DIS_DPRITOT | Net Plant with GI - Distribution-Demand-Primary | 1,635,140 | 5,595,981 |
| 78 | 30 | NP_DIS_DSECTOT | Net Plant with GI - Distribution-Demand-Secondary | 845,160 | 2,892,411 |

This schedule is sponsored by PNM Witness Larkin

**PUBLIC SERVICE OF NEW MEXICO**
**Base Period Ending June 30th, 2026**

| Line No. | Factor No. | Class_Factors | | dule 20-Customer O |
|---|---|---|---|---|
| | | | | Streetlighting |
| 40 | 10 | ENERGY3 | ANNUAL KWH SALES @ METER (excl 36B) | - |
| 41 | 11 | ENERGY4 | Energy - kWh at Meter (Non-renewable only) | - |
| 42 | 12 | FUELREV | Current Fuel Revenues | - |
| 43 | 13 | REV | Current Non Fuel Revenues | - |
| 44 | 14 | CUST371 | Installation on Customer Premises - Direct Assignment | - |
| 45 | 15 | CUST373 | Street Lighting and Signal Systems - Direct Assignment | - |
| 46 | 16 | CUST_DEP | Customer Deposits | - |
| 47 | 17 | NFREV | Non-Fuel Revenues | - |
| 48 | 18 | ST_LIGHTS | Streetlight Energy - kWh at generation | |
| 49 | 19 | CUST902 | 902-Meter Reading Expenses | - |
| 50 | 20 | CUST903 | 903-Customer Records and Collection Expenses | - |
| 51 | 21 | _EXP904 | Uncollectible Percentages | 0.00% |
| 52 | | SERVICES | Number of Services | - |
| 53 | | SVCCOST | Marginal Capital Cost for Secondary Service | - |
| 54 | 22 | WTD_SERV | Customer Weighted Service Costs | - |
| 55 | | | Number of Meters | - |
| 56 | | MTRCOST | Marginal Capital Cost for Meters | - |
| 57 | 23 | WTD_METE | Customer Weighted Meter Costs | - |
| 58 | 24 | CUSTS | Annual Number of Customers | - |
| 59 | | | Annual Customers | - |
| 60 | | | Annual kWh @ Meter | - |
| 61 | 25 | CUSTEXP | Weighted Customer/Energy Allocator | - |
| 62 | 26 | 36B_Dedicated | Dedicated 36B Allocator | - |
| 63 | 27 | | | |
| 64 | | | | |
| 65 | | | | |
| 66 | | **DEPENDENT ALLOCATORS** | | |
| 67 | 19 | NP_PRO_DTOT | Net Plant with GI - Production-Demand | 0 |
| 68 | 20 | NP_PRO_EFTOT | Net Plant with GI - Production-Energy-Fuel | - |
| 69 | 21 | NP_PRO_ENFTOT | Net Plant with GI - Production-Energy-Non-Fuel | - |
| 70 | 22 | NP_STO_PRO_DTOT | Net Plant with GI - Storage-Production-Demand | - |
| 71 | 23 | NP_STO_TRA_DTOT | Net Plant with GI - Storage-Transmission-Demand | - |
| 72 | 24 | NP_STO_DIS_DSUBTOT | Net Plant with GI - Storage-Distribution-Demand-Subs | - |
| 73 | 25 | NP_STO_DIS_DPRITOT | Net Plant with GI - Storage-Distribution-Demand-Primary | - |
| 74 | 26 | NP_STO_DIS_DSECTOT | Net Plant with GI - Storage-Distribution-Demand-Secondary | - |
| 75 | 27 | NP_TRA_DTOT | Net Plant with GI - Transmission-Demand | 0 |
| 76 | 28 | NP_DIS_DSUBTOT | Net Plant with GI - Distribution-Demand-Subs | 0 |
| 77 | 29 | NP_DIS_DPRITOT | Net Plant with GI - Distribution-Demand-Primary | 0 |
| 78 | 30 | NP_DIS_DSECTOT | Net Plant with GI - Distribution-Demand-Secondary | 0 |

This schedule is sponsored by PNM Witness Larkin

**PUBLIC SERVICE OF NEW MEXICO**
**Base Period Ending June 30th, 2026**

Class_Factors

| Line No. | Factor No. | | | Other Input |
|---|---|---|---|---|
| 1 | 31 | NP_DIS_CSRVTOT | Net Plant with GI - Distribution-Customer-Services | |

This schedule is sponsored by PNM Witness Larkin

**PUBLIC SERVICE OF NEW MEXICO**
**Base Period Ending June 30th, 2026**

Class_Factors

Schedule 1

| Line No. | Factor No. | | | PNM Retail | Residential |
|---|---|---|---|---|---|
| 1 | 31 | NP_DIS_CSRVTOT | Net Plant with GI - Distribution-Customer-Services | 145,181,908 | 132,739,204 |

This schedule is sponsored by PNM Witness Larkin

**PUBLIC SERVICE OF NEW MEXICO**
**Base Period Ending June 30th, 2026**

| Class_Factors Line No. | Factor No. | | | Schedule 1B Residential | Schedule 2 Small Power |
|---|---|---|---|---|---|
| 1 | 31 | NP_DIS_CSRVTOT | Net Plant with GI - Distribution-Customer-Services | 0 | 12,442,704 |

This schedule is sponsored by PNM Witness Larkin

**PUBLIC SERVICE OF NEW MEXICO**
**Base Period Ending June 30th, 2026**

| Class_Factors Line No. | Factor No. | | | Schedule 2B Small Power | Schedule 3B General Power |
|---|---|---|---|---|---|
| 1 | 31 | NP_DIS_CSRVTOT | Net Plant with GI - Distribution-Customer-Services | 0 | - |

This schedule is sponsored by PNM Witness Larkin

**PUBLIC SERVICE OF NEW MEXICO**
**Base Period Ending June 30th, 2026**

| Class_Factors Line No. | Factor No. | | | Schedule 3C GP Low LF | Schedule 3D General Power Gov |
|---|---|---|---|---|---|
| 1 | 31 | NP_DIS_CSRVTOT | Net Plant with GI - Distribution-Customer-Services | - | - |

This schedule is sponsored by PNM Witness Larkin

**PUBLIC SERVICE OF NEW MEXICO**
**Base Period Ending June 30th, 2026**

| Class_Factors | | | | Schedule 3E |
|---|---|---|---|---|
| Line No. | Factor No. | | | GP Low LF Gov |
| 1 | 31 | NP_DIS_CSRVTOT | Net Plant with GI - Distribution-Customer-Services | - |

This schedule is sponsored by PNM Witness Larkin

**PUBLIC SERVICE OF NEW MEXICO**
**Base Period Ending June 30th, 2026**

| Class_Factors Line No. | Factor No. | | | Schedule 3F GP Charging Stations | Schedule 4 Large Power |
|---|---|---|---|---|---|
| 1 | 31 | NP_DIS_CSRVTOT | Net Plant with GI - Distribution-Customer-Services | - | - |

This schedule is sponsored by PNM Witness Larkin

**PUBLIC SERVICE OF NEW MEXICO**
**Base Period Ending June 30th, 2026**

| Class_Factors Line No. | Factor No. | | | Schedule 5 Industrial Power | Schedule 10 Irrigation |
|---|---|---|---|---|---|
| 1 | 31 | NP_DIS_CSRVTOT | Net Plant with GI - Distribution-Customer-Services | - | - |

This schedule is sponsored by PNM Witness Larkin

**PUBLIC SERVICE OF NEW MEXICO**
**Base Period Ending June 30th, 2026**

| Class_Factors Line No. | Factor No. | | | Schedule 11 Water & Sewage | Schedule 15 Industrial Power |
|---|---|---|---|---|---|
| 1 | 31 | NP_DIS_CSRVTOT | Net Plant with GI - Distribution-Customer-Services | - | - |

This schedule is sponsored by PNM Witness Larkin

**PUBLIC SERVICE OF NEW MEXICO**
**Base Period Ending June 30th, 2026**

| Class_Factors Line No. | Factor No. | | | Schedule 30 Industrial Power | Schedule 33B Large Service |
|---|---|---|---|---|---|
| 1 | 31 | NP_DIS_CSRVTOT | Net Plant with GI - Distribution-Customer-Services | - | - |

This schedule is sponsored by PNM Witness Larkin

**PUBLIC SERVICE OF NEW MEXICO**
**Base Period Ending June 30th, 2026**

| Class_Factors Line No. | Factor No. | | | Schedule 35B Lg Power Service | Schedule 36B Special Service Rate |
|---|---|---|---|---|---|
| 1 | 31 | NP_DIS_CSRVTOT | Net Plant with GI - Distribution-Customer-Services | - | - |

This schedule is sponsored by PNM Witness Larkin

**PUBLIC SERVICE OF NEW MEXICO**
**Base Period Ending June 30th, 2026**

| Class_Factors Line No. | Factor No. | | | Schedule 6 Priv. Area Light | Schedule 20 Streetlighting |
|---|---|---|---|---|---|
| 1 | 31 | NP_DIS_CSRVTOT | Net Plant with GI - Distribution-Customer-Services | - | - |

This schedule is sponsored by PNM Witness Larkin

**PUBLIC SERVICE OF NEW MEXICO**
**Base Period Ending June 30th, 2026**

| Class_Factors | | | | dule 20-Customer O |
|---|---|---|---|---|
| Line No. | Factor No. | | | Streetlighting |
| 1 | 31 | NP_DIS_CSRVTOT | Net Plant with GI - Distribution-Customer-Services | - |

This schedule is sponsored by PNM Witness Larkin

**PUBLIC SERVICE OF NEW MEXICO**
**Base Period Ending June 30th, 2026**

| Line No. | Class_Factors Factor No. | | | Other Input |
|---|---|---|---|---|
| 2 | 32 | NP_DIS_CMTRTOT | Net Plant with GI - Distribution-Customer-Meters | |
| 3 | 33 | NP_DIS_CMTRRTOT | Net Plant with GI - Distribution-Customer-Meter Reading | |
| 4 | 34 | NP_DIS_CBILTOT | Net Plant with GI - Distribution-Customer-Billing & Collections | |
| 5 | 35 | NP_DIS_CINFTOT | Net Plant with GI - Distribution-Customer-Service & Info | |
| 6 | 36 | NP_DIS_COTHTOT | Net Plant with GI - Distribution-Customer-Other | |
| 7 | 37 | NP_PRO_D_GI | Net GI Plant - Production-Demand | |
| 8 | 38 | NP_PRO_EF_GI | Net GI Plant - Production-Energy-Fuel | |
| 9 | 39 | NP_PRO_ENF_GI | Net GI Plant - Production-Energy-Non-Fuel | |
| 10 | 40 | NP_STO_PRO_D_GI | Net GI Plant - Storage-Production-Demand | |
| 11 | 41 | NP_STO_TRA_D_GI | Net GI Plant - Storage-Transmission-Demand | |
| 12 | 42 | NP_STO_DIS_DSUB_GI | Net GI Plant - Storage-Distribution-Demand-Subs | |
| 13 | 43 | NP_STO_DIS_DPRI_GI | Net GI Plant - Storage-Distribution-Demand-Primary | |
| 14 | 44 | NP_STO_DIS_DSEC_GI | Net GI Plant - Storage-Distribution-Demand-Secondary | |
| 15 | 45 | NP_TRA_D_GI | Net GI Plant - Transmission-Demand | |
| 16 | 46 | NP_DIS_DSUB_GI | Net GI Plant - Distribution-Demand-Subs | |
| 17 | 47 | NP_DIS_DPRI_GI | Net GI Plant - Distribution-Demand-Primary | |
| 18 | 48 | NP_DIS_DSEC_GI | Net GI Plant - Distribution-Demand-Secondary | |
| 19 | 49 | NP_DIS_CSRV_GI | Net GI Plant - Distribution-Customer-Services | |
| 20 | 50 | NP_DIS_CMTR_GI | Net GI Plant - Distribution-Customer-Meters | |
| 21 | 51 | NP_DIS_CMTRR_GI | Net GI Plant - Distribution-Customer-Meter Reading | |
| 22 | 52 | NP_DIS_CBIL_GI | Net GI Plant - Distribution-Customer-Billing & Collections | |
| 23 | 53 | NP_DIS_CINF_GI | Net GI Plant - Distribution-Customer-Service & Info | |
| 24 | 54 | NP_DIS_COTH_GI | Net GI Plant - Distribution-Customer-Other | |
| 25 | 55 | NP_DIS_SVCSMTRS | Net Plant - Distribution-Customer-Services and Meters | |
| 26 | 56 | 5819_PROD | Accts 581-589 - Production-Demand | |
| 27 | 57 | 5819_PROEF | Accts 581-589 - Production-Energy-Fuel | |
| 28 | 58 | 5819_PROENF | Accts 581-589 - Production-Energy-Non-Fuel | |
| 29 | 59 | 5819_STO_PRO_D | Accts 581-589 - Storage-Production-Demand | |
| 30 | 60 | 5819_STO_TRA_D | Accts 581-589 - Storage-Transmission-Demand | |
| 31 | 61 | 5819_STO_DIS_DSUB | Accts 581-589 - Storage-Distribution-Demand-Subs | |
| 32 | 62 | 5819_STO_DIS_DPRI | Accts 581-589 - Storage-Distribution-Demand-Primary | |
| 33 | 63 | 5819_STO_DIS_DSEC | Accts 581-589 - Storage-Distribution-Demand-Secondary | |
| 34 | 64 | 5819_TRAD | Accts 581-589 - Transmission-Demand | |
| 35 | 65 | 5819_DISDSUB | Accts 581-589 - Distribution-Demand-Subs | |
| 36 | 66 | 5819_DISDPRI | Accts 581-589 - Distribution-Demand-Primary | |
| 37 | 67 | 5819_DISDSEC | Accts 581-589 - Distribution-Demand-Secondary | |
| 38 | 68 | 5819_DISCSRV | Accts 581-589 - Distribution-Customer-Services | |
| 39 | 69 | 5819_DISCMTR | Accts 581-589 - Distribution-Customer-Meters | |
| 40 | 70 | 5819_DISCMTRR | Accts 581-589 - Distribution-Customer-Meter Reading | |

**PUBLIC SERVICE OF NEW MEXICO**
**Base Period Ending June 30th, 2026**

| Class_Factors | | | | | Schedule 1 |
|---|---|---|---|---|---|
| Line No. | Factor No. | | | PNM Retail | Residential |
| 2 | 32 | NP_DIS_CMTRTOT | Net Plant with GI - Distribution-Customer-Meters | 74,727,871 | 48,110,601 |
| 3 | 33 | NP_DIS_CMTRRTOT | Net Plant with GI - Distribution-Customer-Meter Reading | 19,378,246 | 17,328,813 |
| 4 | 34 | NP_DIS_CBILTOT | Net Plant with GI - Distribution-Customer-Billing & Collections | 26,487,068 | 23,685,810 |
| 5 | 35 | NP_DIS_CINFTOT | Net Plant with GI - Distribution-Customer-Service & Info | - | - |
| 6 | 36 | NP_DIS_COTHTOT | Net Plant with GI - Distribution-Customer-Other | 39,749,591 | 16,427,780 |
| 7 | 37 | NP_PRO_D_GI | Net GI Plant - Production-Demand | 33,369,252 | 16,815,760 |
| 8 | 38 | NP_PRO_EF_GI | Net GI Plant - Production-Energy-Fuel | - | - |
| 9 | 39 | NP_PRO_ENF_GI | Net GI Plant - Production-Energy-Non-Fuel | - | - |
| 10 | 40 | NP_STO_PRO_D_GI | Net GI Plant - Storage-Production-Demand | - | - |
| 11 | 41 | NP_STO_TRA_D_GI | Net GI Plant - Storage-Transmission-Demand | - | - |
| 12 | 42 | NP_STO_DIS_DSUB_GI | Net GI Plant - Storage-Distribution-Demand-Subs | - | - |
| 13 | 43 | NP_STO_DIS_DPRI_GI | Net GI Plant - Storage-Distribution-Demand-Primary | - | - |
| 14 | 44 | NP_STO_DIS_DSEC_GI | Net GI Plant - Storage-Distribution-Demand-Secondary | - | - |
| 15 | 45 | NP_TRA_D_GI | Net GI Plant - Transmission-Demand | 12,207,234 | 5,273,666 |
| 16 | 46 | NP_DIS_DSUB_GI | Net GI Plant - Distribution-Demand-Subs | 12,531,835 | 6,416,858 |
| 17 | 47 | NP_DIS_DPRI_GI | Net GI Plant - Distribution-Demand-Primary | 31,534,351 | 17,001,152 |
| 18 | 48 | NP_DIS_DSEC_GI | Net GI Plant - Distribution-Demand-Secondary | 14,736,744 | 8,787,435 |
| 19 | 49 | NP_DIS_CSRV_GI | Net GI Plant - Distribution-Customer-Services | 2,043,340 | 1,868,217 |
| 20 | 50 | NP_DIS_CMTR_GI | Net GI Plant - Distribution-Customer-Meters | 19,849,499 | 12,779,319 |
| 21 | 51 | NP_DIS_CMTRR_GI | Net GI Plant - Distribution-Customer-Meter Reading | 19,378,246 | 17,328,813 |
| 22 | 52 | NP_DIS_CBIL_GI | Net GI Plant - Distribution-Customer-Billing & Collections | 26,487,068 | 23,685,810 |
| 23 | 53 | NP_DIS_CINF_GI | Net GI Plant - Distribution-Customer-Service & Info | - | - |
| 24 | 54 | NP_DIS_COTH_GI | Net GI Plant - Distribution-Customer-Other | 21,253,220 | 16,427,780 |
| 25 | 55 | NP_DIS_SVCSMTRS | Net Plant - Distribution-Customer-Services and Meters | | |
| 26 | 56 | 5819_PROD | Accts 581-589 - Production-Demand | - | - |
| 27 | 57 | 5819_PROEF | Accts 581-589 - Production-Energy-Fuel | - | - |
| 28 | 58 | 5819_PROENF | Accts 581-589 - Production-Energy-Non-Fuel | - | - |
| 29 | 59 | 5819_STO_PRO_D | Accts 581-589 - Storage-Production-Demand | - | - |
| 30 | 60 | 5819_STO_TRA_D | Accts 581-589 - Storage-Transmission-Demand | - | - |
| 31 | 61 | 5819_STO_DIS_DSUB | Accts 581-589 - Storage-Distribution-Demand-Subs | - | - |
| 32 | 62 | 5819_STO_DIS_DPRI | Accts 581-589 - Storage-Distribution-Demand-Primary | - | - |
| 33 | 63 | 5819_STO_DIS_DSEC | Accts 581-589 - Storage-Distribution-Demand-Secondary | - | - |
| 34 | 64 | 5819_TRAD | Accts 581-589 - Transmission-Demand | - | - |
| 35 | 65 | 5819_DISDSUB | Accts 581-589 - Distribution-Demand-Subs | 3,259,610 | 1,669,065 |
| 36 | 66 | 5819_DISDPRI | Accts 581-589 - Distribution-Demand-Primary | 8,831,998 | 4,761,606 |
| 37 | 67 | 5819_DISDSEC | Accts 581-589 - Distribution-Demand-Secondary | 4,127,401 | 2,461,145 |
| 38 | 68 | 5819_DISCSRV | Accts 581-589 - Distribution-Customer-Services | 873,356 | 798,506 |
| 39 | 69 | 5819_DISCMTR | Accts 581-589 - Distribution-Customer-Meters | 5,108,790 | 3,289,093 |
| 40 | 70 | 5819_DISCMTRR | Accts 581-589 - Distribution-Customer-Meter Reading | - | - |

This schedule is sponsored by PNM Witness Larkin

**PUBLIC SERVICE OF NEW MEXICO**
**Base Period Ending June 30th, 2026**

| Class_Factors | | | | Schedule 1B | Schedule 2 |
|---|---|---|---|---|---|
| Line No. | Factor No. | | | Residential | Small Power |
| 2 | 32 | NP_DIS_CMTRTOT | Net Plant with GI - Distribution-Customer-Meters | 0 | 15,598,607 |
| 3 | 33 | NP_DIS_CMTRRTOT | Net Plant with GI - Distribution-Customer-Meter Reading | - | 1,876,693 |
| 4 | 34 | NP_DIS_CBILTOT | Net Plant with GI - Distribution-Customer-Billing & Collections | - | 2,565,149 |
| 5 | 35 | NP_DIS_CINFTOT | Net Plant with GI - Distribution-Customer-Service & Info | - | - |
| 6 | 36 | NP_DIS_COTHTOT | Net Plant with GI - Distribution-Customer-Other | 0 | 2,078,356 |
| 7 | 37 | NP_PRO_D_GI | Net GI Plant - Production-Demand | 0 | 3,783,366 |
| 8 | 38 | NP_PRO_EF_GI | Net GI Plant - Production-Energy-Fuel | - | - |
| 9 | 39 | NP_PRO_ENF_GI | Net GI Plant - Production-Energy-Non-Fuel | - | - |
| 10 | 40 | NP_STO_PRO_D_GI | Net GI Plant - Storage-Production-Demand | - | - |
| 11 | 41 | NP_STO_TRA_D_GI | Net GI Plant - Storage-Transmission-Demand | - | - |
| 12 | 42 | NP_STO_DIS_DSUB_GI | Net GI Plant - Storage-Distribution-Demand-Subs | - | - |
| 13 | 43 | NP_STO_DIS_DPRI_GI | Net GI Plant - Storage-Distribution-Demand-Primary | - | - |
| 14 | 44 | NP_STO_DIS_DSEC_GI | Net GI Plant - Storage-Distribution-Demand-Secondary | - | - |
| 15 | 45 | NP_TRA_D_GI | Net GI Plant - Transmission-Demand | 0 | 1,216,928 |
| 16 | 46 | NP_DIS_DSUB_GI | Net GI Plant - Distribution-Demand-Subs | 0 | 1,550,177 |
| 17 | 47 | NP_DIS_DPRI_GI | Net GI Plant - Distribution-Demand-Primary | 0 | 4,107,118 |
| 18 | 48 | NP_DIS_DSEC_GI | Net GI Plant - Distribution-Demand-Secondary | 0 | 2,122,858 |
| 19 | 49 | NP_DIS_CSRV_GI | Net GI Plant - Distribution-Customer-Services | 0 | 175,123 |
| 20 | 50 | NP_DIS_CMTR_GI | Net GI Plant - Distribution-Customer-Meters | 0 | 4,143,361 |
| 21 | 51 | NP_DIS_CMTRR_GI | Net GI Plant - Distribution-Customer-Meter Reading | - | 1,876,693 |
| 22 | 52 | NP_DIS_CBIL_GI | Net GI Plant - Distribution-Customer-Billing & Collections | - | 2,565,149 |
| 23 | 53 | NP_DIS_CINF_GI | Net GI Plant - Distribution-Customer-Service & Info | - | - |
| 24 | 54 | NP_DIS_COTH_GI | Net GI Plant - Distribution-Customer-Other | 0 | 2,078,356 |
| 25 | 55 | NP_DIS_SVCSMTRS | Net Plant - Distribution-Customer-Services and Meters | | |
| 26 | 56 | 5819_PROD | Accts 581-589 - Production-Demand | - | - |
| 27 | 57 | 5819_PROEF | Accts 581-589 - Production-Energy-Fuel | - | - |
| 28 | 58 | 5819_PROENF | Accts 581-589 - Production-Energy-Non-Fuel | - | - |
| 29 | 59 | 5819_STO_PRO_D | Accts 581-589 - Storage-Production-Demand | - | - |
| 30 | 60 | 5819_STO_TRA_D | Accts 581-589 - Storage-Transmission-Demand | - | - |
| 31 | 61 | 5819_STO_DIS_DSUB | Accts 581-589 - Storage-Distribution-Demand-Subs | - | - |
| 32 | 62 | 5819_STO_DIS_DPRI | Accts 581-589 - Storage-Distribution-Demand-Primary | - | - |
| 33 | 63 | 5819_STO_DIS_DSEC | Accts 581-589 - Storage-Distribution-Demand-Secondary | - | - |
| 34 | 64 | 5819_TRAD | Accts 581-589 - Transmission-Demand | - | - |
| 35 | 65 | 5819_DISDSUB | Accts 581-589 - Distribution-Demand-Subs | 0 | 403,211 |
| 36 | 66 | 5819_DISDPRI | Accts 581-589 - Distribution-Demand-Primary | 0 | 1,150,303 |
| 37 | 67 | 5819_DISDSEC | Accts 581-589 - Distribution-Demand-Secondary | 0 | 594,560 |
| 38 | 68 | 5819_DISCSRV | Accts 581-589 - Distribution-Customer-Services | 0 | 74,850 |
| 39 | 69 | 5819_DISCMTR | Accts 581-589 - Distribution-Customer-Meters | 0 | 1,066,403 |
| 40 | 70 | 5819_DISCMTRR | Accts 581-589 - Distribution-Customer-Meter Reading | - | - |

This schedule is sponsored by PNM Witness Larkin

**PUBLIC SERVICE OF NEW MEXICO**
**Base Period Ending June 30th, 2026**

| Class_Factors Line No. | Factor No. | | | Schedule 2B Small Power | Schedule 3B General Power |
|---|---|---|---|---|---|
| 2 | 32 | NP_DIS_CMTRTOT | Net Plant with GI - Distribution-Customer-Meters | 0 | 4,688,406 |
| 3 | 33 | NP_DIS_CMTRRTOT | Net Plant with GI - Distribution-Customer-Meter Reading | - | 97,246 |
| 4 | 34 | NP_DIS_CBILTOT | Net Plant with GI - Distribution-Customer-Billing & Collections | - | 132,921 |
| 5 | 35 | NP_DIS_CINFTOT | Net Plant with GI - Distribution-Customer-Service & Info | - | - |
| 6 | 36 | NP_DIS_COTHTOT | Net Plant with GI - Distribution-Customer-Other | 0 | 773,357 |
| 7 | 37 | NP_PRO_D_GI | Net GI Plant - Production-Demand | 0 | 5,512,417 |
| 8 | 38 | NP_PRO_EF_GI | Net GI Plant - Production-Energy-Fuel | - | - |
| 9 | 39 | NP_PRO_ENF_GI | Net GI Plant - Production-Energy-Non-Fuel | - | - |
| 10 | 40 | NP_STO_PRO_D_GI | Net GI Plant - Storage-Production-Demand | - | - |
| 11 | 41 | NP_STO_TRA_D_GI | Net GI Plant - Storage-Transmission-Demand | - | - |
| 12 | 42 | NP_STO_DIS_DSUB_GI | Net GI Plant - Storage-Distribution-Demand-Subs | - | - |
| 13 | 43 | NP_STO_DIS_DPRI_GI | Net GI Plant - Storage-Distribution-Demand-Primary | - | - |
| 14 | 44 | NP_STO_DIS_DSEC_GI | Net GI Plant - Storage-Distribution-Demand-Secondary | - | - |
| 15 | 45 | NP_TRA_D_GI | Net GI Plant - Transmission-Demand | 0 | 1,804,675 |
| 16 | 46 | NP_DIS_DSUB_GI | Net GI Plant - Distribution-Demand-Subs | 0 | 1,878,127 |
| 17 | 47 | NP_DIS_DPRI_GI | Net GI Plant - Distribution-Demand-Primary | 0 | 4,976,006 |
| 18 | 48 | NP_DIS_DSEC_GI | Net GI Plant - Distribution-Demand-Secondary | 0 | 2,571,962 |
| 19 | 49 | NP_DIS_CSRV_GI | Net GI Plant - Distribution-Customer-Services | 0 | - |
| 20 | 50 | NP_DIS_CMTR_GI | Net GI Plant - Distribution-Customer-Meters | 0 | 1,245,352 |
| 21 | 51 | NP_DIS_CMTRR_GI | Net GI Plant - Distribution-Customer-Meter Reading | - | 97,246 |
| 22 | 52 | NP_DIS_CBIL_GI | Net GI Plant - Distribution-Customer-Billing & Collections | - | 132,921 |
| 23 | 53 | NP_DIS_CINF_GI | Net GI Plant - Distribution-Customer-Service & Info | - | - |
| 24 | 54 | NP_DIS_COTH_GI | Net GI Plant - Distribution-Customer-Other | 0 | 773,357 |
| 25 | 55 | NP_DIS_SVCSMTRS | Net Plant - Distribution-Customer-Services and Meters | | |
| 26 | 56 | 5819_PROD | Accts 581-589 - Production-Demand | - | - |
| 27 | 57 | 5819_PROEF | Accts 581-589 - Production-Energy-Fuel | - | - |
| 28 | 58 | 5819_PROENF | Accts 581-589 - Production-Energy-Non-Fuel | - | - |
| 29 | 59 | 5819_STO_PRO_D | Accts 581-589 - Storage-Production-Demand | - | - |
| 30 | 60 | 5819_STO_TRA_D | Accts 581-589 - Storage-Transmission-Demand | - | - |
| 31 | 61 | 5819_STO_DIS_DSUB | Accts 581-589 - Storage-Distribution-Demand-Subs | - | - |
| 32 | 62 | 5819_STO_DIS_DPRI | Accts 581-589 - Storage-Distribution-Demand-Primary | - | - |
| 33 | 63 | 5819_STO_DIS_DSEC | Accts 581-589 - Storage-Distribution-Demand-Secondary | - | - |
| 34 | 64 | 5819_TRAD | Accts 581-589 - Transmission-Demand | - | - |
| 35 | 65 | 5819_DISDSUB | Accts 581-589 - Distribution-Demand-Subs | 0 | 488,513 |
| 36 | 66 | 5819_DISDPRI | Accts 581-589 - Distribution-Demand-Primary | 0 | 1,393,657 |
| 37 | 67 | 5819_DISDSEC | Accts 581-589 - Distribution-Demand-Secondary | 0 | 720,344 |
| 38 | 68 | 5819_DISCSRV | Accts 581-589 - Distribution-Customer-Services | 0 | - |
| 39 | 69 | 5819_DISCMTR | Accts 581-589 - Distribution-Customer-Meters | 0 | 320,524 |
| 40 | 70 | 5819_DISCMTRR | Accts 581-589 - Distribution-Customer-Meter Reading | - | - |

This schedule is sponsored by PNM Witness Larkin

**PUBLIC SERVICE OF NEW MEXICO**
**Base Period Ending June 30th, 2026**

| Class_Factors Line No. | Factor No. | | | Schedule 3C GP Low LF | Schedule 3D General Power Gov |
|---|---|---|---|---|---|
| 2 | 32 | NP_DIS_CMTRTOT | Net Plant with GI - Distribution-Customer-Meters | 2,055,763 | 290,108 |
| 3 | 33 | NP_DIS_CMTRRTOT | Net Plant with GI - Distribution-Customer-Meter Reading | 42,640 | 6,017 |
| 4 | 34 | NP_DIS_CBILTOT | Net Plant with GI - Distribution-Customer-Billing & Collections | 58,283 | 8,225 |
| 5 | 35 | NP_DIS_CINFTOT | Net Plant with GI - Distribution-Customer-Service & Info | - | - |
| 6 | 36 | NP_DIS_COTHTOT | Net Plant with GI - Distribution-Customer-Other | 192,885 | 54,564 |
| 7 | 37 | NP_PRO_D_GI | Net GI Plant - Production-Demand | 1,163,282 | 373,949 |
| 8 | 38 | NP_PRO_EF_GI | Net GI Plant - Production-Energy-Fuel | - | - |
| 9 | 39 | NP_PRO_ENF_GI | Net GI Plant - Production-Energy-Non-Fuel | - | - |
| 10 | 40 | NP_STO_PRO_D_GI | Net GI Plant - Storage-Production-Demand | - | - |
| 11 | 41 | NP_STO_TRA_D_GI | Net GI Plant - Storage-Transmission-Demand | - | - |
| 12 | 42 | NP_STO_DIS_DSUB_GI | Net GI Plant - Storage-Distribution-Demand-Subs | - | - |
| 13 | 43 | NP_STO_DIS_DPRI_GI | Net GI Plant - Storage-Distribution-Demand-Primary | - | - |
| 14 | 44 | NP_STO_DIS_DSEC_GI | Net GI Plant - Storage-Distribution-Demand-Secondary | - | - |
| 15 | 45 | NP_TRA_D_GI | Net GI Plant - Transmission-Demand | 365,656 | 123,869 |
| 16 | 46 | NP_DIS_DSUB_GI | Net GI Plant - Distribution-Demand-Subs | 575,661 | 126,104 |
| 17 | 47 | NP_DIS_DPRI_GI | Net GI Plant - Distribution-Demand-Primary | 1,525,187 | 334,107 |
| 18 | 48 | NP_DIS_DSEC_GI | Net GI Plant - Distribution-Demand-Secondary | 788,328 | 172,691 |
| 19 | 49 | NP_DIS_CSRV_GI | Net GI Plant - Distribution-Customer-Services | - | - |
| 20 | 50 | NP_DIS_CMTR_GI | Net GI Plant - Distribution-Customer-Meters | 546,059 | 77,059 |
| 21 | 51 | NP_DIS_CMTRR_GI | Net GI Plant - Distribution-Customer-Meter Reading | 42,640 | 6,017 |
| 22 | 52 | NP_DIS_CBIL_GI | Net GI Plant - Distribution-Customer-Billing & Collections | 58,283 | 8,225 |
| 23 | 53 | NP_DIS_CINF_GI | Net GI Plant - Distribution-Customer-Service & Info | - | - |
| 24 | 54 | NP_DIS_COTH_GI | Net GI Plant - Distribution-Customer-Other | 192,885 | 54,564 |
| 25 | 55 | NP_DIS_SVCSMTRS | Net Plant - Distribution-Customer-Services and Meters | | |
| 26 | 56 | 5819_PROD | Accts 581-589 - Production-Demand | - | - |
| 27 | 57 | 5819_PROEF | Accts 581-589 - Production-Energy-Fuel | - | - |
| 28 | 58 | 5819_PROENF | Accts 581-589 - Production-Energy-Non-Fuel | - | - |
| 29 | 59 | 5819_STO_PRO_D | Accts 581-589 - Storage-Production-Demand | - | - |
| 30 | 60 | 5819_STO_TRA_D | Accts 581-589 - Storage-Transmission-Demand | - | - |
| 31 | 61 | 5819_STO_DIS_DSUB | Accts 581-589 - Storage-Distribution-Demand-Subs | - | - |
| 32 | 62 | 5819_STO_DIS_DPRI | Accts 581-589 - Storage-Distribution-Demand-Primary | - | - |
| 33 | 63 | 5819_STO_DIS_DSEC | Accts 581-589 - Storage-Distribution-Demand-Secondary | - | - |
| 34 | 64 | 5819_TRAD | Accts 581-589 - Transmission-Demand | - | - |
| 35 | 65 | 5819_DISDSUB | Accts 581-589 - Distribution-Demand-Subs | 149,733 | 32,801 |
| 36 | 66 | 5819_DISDPRI | Accts 581-589 - Distribution-Demand-Primary | 427,167 | 93,575 |
| 37 | 67 | 5819_DISDSEC | Accts 581-589 - Distribution-Demand-Secondary | 220,791 | 48,367 |
| 38 | 68 | 5819_DISCSRV | Accts 581-589 - Distribution-Customer-Services | - | - |
| 39 | 69 | 5819_DISCMTR | Accts 581-589 - Distribution-Customer-Meters | 140,543 | 19,833 |
| 40 | 70 | 5819_DISCMTRR | Accts 581-589 - Distribution-Customer-Meter Reading | - | - |

This schedule is sponsored by PNM Witness Larkin

**PUBLIC SERVICE OF NEW MEXICO**
**Base Period Ending June 30th, 2026**

| Class_Factors Line No. | Factor No. | | | Schedule 3E GP Low LF Gov |
|---|---|---|---|---|
| 2 | 32 | NP_DIS_CMTRTOT | Net Plant with GI - Distribution-Customer-Meters | 120,045 |
| 3 | 33 | NP_DIS_CMTRRTOT | Net Plant with GI - Distribution-Customer-Meter Reading | 2,490 |
| 4 | 34 | NP_DIS_CBILTOT | Net Plant with GI - Distribution-Customer-Billing & Collections | 3,403 |
| 5 | 35 | NP_DIS_CINFTOT | Net Plant with GI - Distribution-Customer-Service & Info | - |
| 6 | 36 | NP_DIS_COTHTOT | Net Plant with GI - Distribution-Customer-Other | 13,780 |
| 7 | 37 | NP_PRO_D_GI | Net GI Plant - Production-Demand | 95,926 |
| 8 | 38 | NP_PRO_EF_GI | Net GI Plant - Production-Energy-Fuel | - |
| 9 | 39 | NP_PRO_ENF_GI | Net GI Plant - Production-Energy-Non-Fuel | - |
| 10 | 40 | NP_STO_PRO_D_GI | Net GI Plant - Storage-Production-Demand | - |
| 11 | 41 | NP_STO_TRA_D_GI | Net GI Plant - Storage-Transmission-Demand | - |
| 12 | 42 | NP_STO_DIS_DSUB_GI | Net GI Plant - Storage-Distribution-Demand-Subs | - |
| 13 | 43 | NP_STO_DIS_DPRI_GI | Net GI Plant - Storage-Distribution-Demand-Primary | - |
| 14 | 44 | NP_STO_DIS_DSEC_GI | Net GI Plant - Storage-Distribution-Demand-Secondary | - |
| 15 | 45 | NP_TRA_D_GI | Net GI Plant - Transmission-Demand | 29,434 |
| 16 | 46 | NP_DIS_DSUB_GI | Net GI Plant - Distribution-Demand-Subs | 51,637 |
| 17 | 47 | NP_DIS_DPRI_GI | Net GI Plant - Distribution-Demand-Primary | 136,811 |
| 18 | 48 | NP_DIS_DSEC_GI | Net GI Plant - Distribution-Demand-Secondary | 70,714 |
| 19 | 49 | NP_DIS_CSRV_GI | Net GI Plant - Distribution-Customer-Services | - |
| 20 | 50 | NP_DIS_CMTR_GI | Net GI Plant - Distribution-Customer-Meters | 31,887 |
| 21 | 51 | NP_DIS_CMTRR_GI | Net GI Plant - Distribution-Customer-Meter Reading | 2,490 |
| 22 | 52 | NP_DIS_CBIL_GI | Net GI Plant - Distribution-Customer-Billing & Collections | 3,403 |
| 23 | 53 | NP_DIS_CINF_GI | Net GI Plant - Distribution-Customer-Service & Info | - |
| 24 | 54 | NP_DIS_COTH_GI | Net GI Plant - Distribution-Customer-Other | 13,780 |
| 25 | 55 | NP_DIS_SVCSMTRS | Net Plant - Distribution-Customer-Services and Meters | |
| 26 | 56 | 5819_PROD | Accts 581-589 - Production-Demand | - |
| 27 | 57 | 5819_PROEF | Accts 581-589 - Production-Energy-Fuel | - |
| 28 | 58 | 5819_PROENF | Accts 581-589 - Production-Energy-Non-Fuel | - |
| 29 | 59 | 5819_STO_PRO_D | Accts 581-589 - Storage-Production-Demand | - |
| 30 | 60 | 5819_STO_TRA_D | Accts 581-589 - Storage-Transmission-Demand | - |
| 31 | 61 | 5819_STO_DIS_DSUB | Accts 581-589 - Storage-Distribution-Demand-Subs | - |
| 32 | 62 | 5819_STO_DIS_DPRI | Accts 581-589 - Storage-Distribution-Demand-Primary | - |
| 33 | 63 | 5819_STO_DIS_DSEC | Accts 581-589 - Storage-Distribution-Demand-Secondary | - |
| 34 | 64 | 5819_TRAD | Accts 581-589 - Transmission-Demand | - |
| 35 | 65 | 5819_DISDSUB | Accts 581-589 - Distribution-Demand-Subs | 13,431 |
| 36 | 66 | 5819_DISDPRI | Accts 581-589 - Distribution-Demand-Primary | 38,317 |
| 37 | 67 | 5819_DISDSEC | Accts 581-589 - Distribution-Demand-Secondary | 19,805 |
| 38 | 68 | 5819_DISCSRV | Accts 581-589 - Distribution-Customer-Services | - |
| 39 | 69 | 5819_DISCMTR | Accts 581-589 - Distribution-Customer-Meters | 8,207 |
| 40 | 70 | 5819_DISCMTRR | Accts 581-589 - Distribution-Customer-Meter Reading | - |

This schedule is sponsored by PNM Witness Larkin

**PUBLIC SERVICE OF NEW MEXICO**
**Base Period Ending June 30th, 2026**

| Class_Factors Line No. | Factor No. | | | Schedule 3F GP Charging Stations | Schedule 4 Large Power |
|---|---|---|---|---|---|
| 2 | 32 | NP_DIS_CMTRTOT | Net Plant with GI - Distribution-Customer-Meters | 26,677 | 1,557,501 |
| 3 | 33 | NP_DIS_CMTRRTOT | Net Plant with GI - Distribution-Customer-Meter Reading | 553 | 6,052 |
| 4 | 34 | NP_DIS_CBILTOT | Net Plant with GI - Distribution-Customer-Billing & Collections | 756 | 8,272 |
| 5 | 35 | NP_DIS_CINFTOT | Net Plant with GI - Distribution-Customer-Service & Info | - | - |
| 6 | 36 | NP_DIS_COTHTOT | Net Plant with GI - Distribution-Customer-Other | 3,808 | 416,924 |
| 7 | 37 | NP_PRO_D_GI | Net GI Plant - Production-Demand | 23,241 | 2,753,551 |
| 8 | 38 | NP_PRO_EF_GI | Net GI Plant - Production-Energy-Fuel | - | - |
| 9 | 39 | NP_PRO_ENF_GI | Net GI Plant - Production-Energy-Non-Fuel | - | - |
| 10 | 40 | NP_STO_PRO_D_GI | Net GI Plant - Storage-Production-Demand | - | - |
| 11 | 41 | NP_STO_TRA_D_GI | Net GI Plant - Storage-Transmission-Demand | - | - |
| 12 | 42 | NP_STO_DIS_DSUB_GI | Net GI Plant - Storage-Distribution-Demand-Subs | - | - |
| 13 | 43 | NP_STO_DIS_DPRI_GI | Net GI Plant - Storage-Distribution-Demand-Primary | - | - |
| 14 | 44 | NP_STO_DIS_DSEC_GI | Net GI Plant - Storage-Distribution-Demand-Secondary | - | - |
| 15 | 45 | NP_TRA_D_GI | Net GI Plant - Transmission-Demand | 6,605 | 897,549 |
| 16 | 46 | NP_DIS_DSUB_GI | Net GI Plant - Distribution-Demand-Subs | 21,841 | 854,799 |
| 17 | 47 | NP_DIS_DPRI_GI | Net GI Plant - Distribution-Demand-Primary | 57,866 | 2,264,748 |
| 18 | 48 | NP_DIS_DSEC_GI | Net GI Plant - Distribution-Demand-Secondary | 29,909 | - |
| 19 | 49 | NP_DIS_CSRV_GI | Net GI Plant - Distribution-Customer-Services | - | - |
| 20 | 50 | NP_DIS_CMTR_GI | Net GI Plant - Distribution-Customer-Meters | 7,086 | 413,709 |
| 21 | 51 | NP_DIS_CMTRR_GI | Net GI Plant - Distribution-Customer-Meter Reading | 553 | 6,052 |
| 22 | 52 | NP_DIS_CBIL_GI | Net GI Plant - Distribution-Customer-Billing & Collections | 756 | 8,272 |
| 23 | 53 | NP_DIS_CINF_GI | Net GI Plant - Distribution-Customer-Service & Info | - | - |
| 24 | 54 | NP_DIS_COTH_GI | Net GI Plant - Distribution-Customer-Other | 3,808 | 416,924 |
| 25 | 55 | NP_DIS_SVCSMTRS | Net Plant - Distribution-Customer-Services and Meters | | |
| 26 | 56 | 5819_PROD | Accts 581-589 - Production-Demand | - | - |
| 27 | 57 | 5819_PROEF | Accts 581-589 - Production-Energy-Fuel | - | - |
| 28 | 58 | 5819_PROENF | Accts 581-589 - Production-Energy-Non-Fuel | - | - |
| 29 | 59 | 5819_STO_PRO_D | Accts 581-589 - Storage-Production-Demand | - | - |
| 30 | 60 | 5819_STO_TRA_D | Accts 581-589 - Storage-Transmission-Demand | - | - |
| 31 | 61 | 5819_STO_DIS_DSUB | Accts 581-589 - Storage-Distribution-Demand-Subs | - | - |
| 32 | 62 | 5819_STO_DIS_DPRI | Accts 581-589 - Storage-Distribution-Demand-Primary | - | - |
| 33 | 63 | 5819_STO_DIS_DSEC | Accts 581-589 - Storage-Distribution-Demand-Secondary | - | - |
| 34 | 64 | 5819_TRAD | Accts 581-589 - Transmission-Demand | - | - |
| 35 | 65 | 5819_DISDSUB | Accts 581-589 - Distribution-Demand-Subs | 5,681 | 222,339 |
| 36 | 66 | 5819_DISDPRI | Accts 581-589 - Distribution-Demand-Primary | 16,207 | 634,300 |
| 37 | 67 | 5819_DISDSEC | Accts 581-589 - Distribution-Demand-Secondary | 8,377 | - |
| 38 | 68 | 5819_DISCSRV | Accts 581-589 - Distribution-Customer-Services | - | - |
| 39 | 69 | 5819_DISCMTR | Accts 581-589 - Distribution-Customer-Meters | 1,824 | 106,479 |
| 40 | 70 | 5819_DISCMTRR | Accts 581-589 - Distribution-Customer-Meter Reading | - | - |

This schedule is sponsored by PNM Witness Larkin

**PUBLIC SERVICE OF NEW MEXICO**
**Base Period Ending June 30th, 2026**

| Class_Factors Line No. | Factor No. | | | Schedule 5 Industrial Power | Schedule 10 Irrigation |
|---|---|---|---|---|---|
| 2 | 32 | NP_DIS_CMTRTOT | Net Plant with GI - Distribution-Customer-Meters | 8,900 | 526,862 |
| 3 | 33 | NP_DIS_CMTRRTOT | Net Plant with GI - Distribution-Customer-Meter Reading | 35 | 10,928 |
| 4 | 34 | NP_DIS_CBILTOT | Net Plant with GI - Distribution-Customer-Billing & Collections | 47 | 14,937 |
| 5 | 35 | NP_DIS_CINFTOT | Net Plant with GI - Distribution-Customer-Service & Info | - | - |
| 6 | 36 | NP_DIS_COTHTOT | Net Plant with GI - Distribution-Customer-Other | 5,807 | 20,733 |
| 7 | 37 | NP_PRO_D_GI | Net GI Plant - Production-Demand | 57,687 | 78,477 |
| 8 | 38 | NP_PRO_EF_GI | Net GI Plant - Production-Energy-Fuel | - | - |
| 9 | 39 | NP_PRO_ENF_GI | Net GI Plant - Production-Energy-Non-Fuel | - | - |
| 10 | 40 | NP_STO_PRO_D_GI | Net GI Plant - Storage-Production-Demand | - | - |
| 11 | 41 | NP_STO_TRA_D_GI | Net GI Plant - Storage-Transmission-Demand | - | - |
| 12 | 42 | NP_STO_DIS_DSUB_GI | Net GI Plant - Storage-Distribution-Demand-Subs | - | - |
| 13 | 43 | NP_STO_DIS_DPRI_GI | Net GI Plant - Storage-Distribution-Demand-Primary | - | - |
| 14 | 44 | NP_STO_DIS_DSEC_GI | Net GI Plant - Storage-Distribution-Demand-Secondary | - | - |
| 15 | 45 | NP_TRA_D_GI | Net GI Plant - Transmission-Demand | 18,804 | 24,540 |
| 16 | 46 | NP_DIS_DSUB_GI | Net GI Plant - Distribution-Demand-Subs | - | 39,264 |
| 17 | 47 | NP_DIS_DPRI_GI | Net GI Plant - Distribution-Demand-Primary | - | 104,028 |
| 18 | 48 | NP_DIS_DSEC_GI | Net GI Plant - Distribution-Demand-Secondary | - | 53,769 |
| 19 | 49 | NP_DIS_CSRV_GI | Net GI Plant - Distribution-Customer-Services | - | - |
| 20 | 50 | NP_DIS_CMTR_GI | Net GI Plant - Distribution-Customer-Meters | 2,364 | 139,947 |
| 21 | 51 | NP_DIS_CMTRR_GI | Net GI Plant - Distribution-Customer-Meter Reading | 35 | 10,928 |
| 22 | 52 | NP_DIS_CBIL_GI | Net GI Plant - Distribution-Customer-Billing & Collections | 47 | 14,937 |
| 23 | 53 | NP_DIS_CINF_GI | Net GI Plant - Distribution-Customer-Service & Info | - | - |
| 24 | 54 | NP_DIS_COTH_GI | Net GI Plant - Distribution-Customer-Other | 5,807 | 20,733 |
| 25 | 55 | NP_DIS_SVCSMTRS | Net Plant - Distribution-Customer-Services and Meters | | |
| 26 | 56 | 5819_PROD | Accts 581-589 - Production-Demand | - | - |
| 27 | 57 | 5819_PROEF | Accts 581-589 - Production-Energy-Fuel | - | - |
| 28 | 58 | 5819_PROENF | Accts 581-589 - Production-Energy-Non-Fuel | - | - |
| 29 | 59 | 5819_STO_PRO_D | Accts 581-589 - Storage-Production-Demand | - | - |
| 30 | 60 | 5819_STO_TRA_D | Accts 581-589 - Storage-Transmission-Demand | - | - |
| 31 | 61 | 5819_STO_DIS_DSUB | Accts 581-589 - Storage-Distribution-Demand-Subs | - | - |
| 32 | 62 | 5819_STO_DIS_DPRI | Accts 581-589 - Storage-Distribution-Demand-Primary | - | - |
| 33 | 63 | 5819_STO_DIS_DSEC | Accts 581-589 - Storage-Distribution-Demand-Secondary | - | - |
| 34 | 64 | 5819_TRAD | Accts 581-589 - Transmission-Demand | - | - |
| 35 | 65 | 5819_DISDSUB | Accts 581-589 - Distribution-Demand-Subs | - | 10,213 |
| 36 | 66 | 5819_DISDPRI | Accts 581-589 - Distribution-Demand-Primary | - | 29,136 |
| 37 | 67 | 5819_DISDSEC | Accts 581-589 - Distribution-Demand-Secondary | - | 15,059 |
| 38 | 68 | 5819_DISCSRV | Accts 581-589 - Distribution-Customer-Services | - | - |
| 39 | 69 | 5819_DISCMTR | Accts 581-589 - Distribution-Customer-Meters | 608 | 36,019 |
| 40 | 70 | 5819_DISCMTRR | Accts 581-589 - Distribution-Customer-Meter Reading | - | - |

This schedule is sponsored by PNM Witness Larkin

**PUBLIC SERVICE OF NEW MEXICO**
**Base Period Ending June 30th, 2026**

| Class_Factors Line No. | Factor No. | | | Schedule 11 Water & Sewage | Schedule 15 Industrial Power |
|---|---|---|---|---|---|
| 2 | 32 | NP_DIS_CMTRTOT | Net Plant with GI - Distribution-Customer-Meters | 1,432,901 | 35,600.02 |
| 3 | 33 | NP_DIS_CMTRRTOT | Net Plant with GI - Distribution-Customer-Meter Reading | 5,568 | 138.33 |
| 4 | 34 | NP_DIS_CBILTOT | Net Plant with GI - Distribution-Customer-Billing & Collections | 7,610 | 189.08 |
| 5 | 35 | NP_DIS_CINFTOT | Net Plant with GI - Distribution-Customer-Service & Info | - | - |
| 6 | 36 | NP_DIS_COTHTOT | Net Plant with GI - Distribution-Customer-Other | 88,719 | 33,413.37 |
| 7 | 37 | NP_PRO_D_GI | Net GI Plant - Production-Demand | 285,627 | 203,799.91 |
| 8 | 38 | NP_PRO_EF_GI | Net GI Plant - Production-Energy-Fuel | - | - |
| 9 | 39 | NP_PRO_ENF_GI | Net GI Plant - Production-Energy-Non-Fuel | - | - |
| 10 | 40 | NP_STO_PRO_D_GI | Net GI Plant - Storage-Production-Demand | - | - |
| 11 | 41 | NP_STO_TRA_D_GI | Net GI Plant - Storage-Transmission-Demand | - | - |
| 12 | 42 | NP_STO_DIS_DSUB_GI | Net GI Plant - Storage-Distribution-Demand-Subs | - | - |
| 13 | 43 | NP_STO_DIS_DPRI_GI | Net GI Plant - Storage-Distribution-Demand-Primary | - | - |
| 14 | 44 | NP_STO_DIS_DSEC_GI | Net GI Plant - Storage-Distribution-Demand-Secondary | - | - |
| 15 | 45 | NP_TRA_D_GI | Net GI Plant - Transmission-Demand | 113,057 | 66,277.50 |
| 16 | 46 | NP_DIS_DSUB_GI | Net GI Plant - Distribution-Demand-Subs | 286,192 | - |
| 17 | 47 | NP_DIS_DPRI_GI | Net GI Plant - Distribution-Demand-Primary | 758,252 | - |
| 18 | 48 | NP_DIS_DSEC_GI | Net GI Plant - Distribution-Demand-Secondary | - | - |
| 19 | 49 | NP_DIS_CSRV_GI | Net GI Plant - Distribution-Customer-Services | - | - |
| 20 | 50 | NP_DIS_CMTR_GI | Net GI Plant - Distribution-Customer-Meters | 380,613 | 9,456.21 |
| 21 | 51 | NP_DIS_CMTRR_GI | Net GI Plant - Distribution-Customer-Meter Reading | 5,568 | 138.33 |
| 22 | 52 | NP_DIS_CBIL_GI | Net GI Plant - Distribution-Customer-Billing & Collections | 7,610 | 189.08 |
| 23 | 53 | NP_DIS_CINF_GI | Net GI Plant - Distribution-Customer-Service & Info | - | - |
| 24 | 54 | NP_DIS_COTH_GI | Net GI Plant - Distribution-Customer-Other | 88,719 | 33,413.37 |
| 25 | 55 | NP_DIS_SVCSMTRS | Net Plant - Distribution-Customer-Services and Meters | | |
| 26 | 56 | 5819_PROD | Accts 581-589 - Production-Demand | - | - |
| 27 | 57 | 5819_PROEF | Accts 581-589 - Production-Energy-Fuel | - | - |
| 28 | 58 | 5819_PROENF | Accts 581-589 - Production-Energy-Non-Fuel | - | - |
| 29 | 59 | 5819_STO_PRO_D | Accts 581-589 - Storage-Production-Demand | - | - |
| 30 | 60 | 5819_STO_TRA_D | Accts 581-589 - Storage-Transmission-Demand | - | - |
| 31 | 61 | 5819_STO_DIS_DSUB | Accts 581-589 - Storage-Distribution-Demand-Subs | - | - |
| 32 | 62 | 5819_STO_DIS_DPRI | Accts 581-589 - Storage-Distribution-Demand-Primary | - | - |
| 33 | 63 | 5819_STO_DIS_DSEC | Accts 581-589 - Storage-Distribution-Demand-Secondary | - | - |
| 34 | 64 | 5819_TRAD | Accts 581-589 - Transmission-Demand | - | - |
| 35 | 65 | 5819_DISDSUB | Accts 581-589 - Distribution-Demand-Subs | 74,440 | - |
| 36 | 66 | 5819_DISDPRI | Accts 581-589 - Distribution-Demand-Primary | 212,368 | - |
| 37 | 67 | 5819_DISDSEC | Accts 581-589 - Distribution-Demand-Secondary | - | - |
| 38 | 68 | 5819_DISCSRV | Accts 581-589 - Distribution-Customer-Services | - | - |
| 39 | 69 | 5819_DISCMTR | Accts 581-589 - Distribution-Customer-Meters | 97,961 | 2,433.80 |
| 40 | 70 | 5819_DISCMTRR | Accts 581-589 - Distribution-Customer-Meter Reading | - | - |

This schedule is sponsored by PNM Witness Larkin

**PUBLIC SERVICE OF NEW MEXICO**
**Base Period Ending June 30th, 2026**

| Class_Factors Line No. | Factor No. | | | Schedule 30 Industrial Power | Schedule 33B Large Service |
|---|---|---|---|---|---|
| 2 | 32 | NP_DIS_CMTRTOT | Net Plant with GI - Distribution-Customer-Meters | 124,600 | 17,800 |
| 3 | 33 | NP_DIS_CMTRRTOT | Net Plant with GI - Distribution-Customer-Meter Reading | 484 | 69 |
| 4 | 34 | NP_DIS_CBILTOT | Net Plant with GI - Distribution-Customer-Billing & Collections | 662 | 95 |
| 5 | 35 | NP_DIS_CINFTOT | Net Plant with GI - Distribution-Customer-Service & Info | - | - |
| 6 | 36 | NP_DIS_COTHTOT | Net Plant with GI - Distribution-Customer-Other | 306,458 | 1,574 |
| 7 | 37 | NP_PRO_D_GI | Net GI Plant - Production-Demand | 1,686,226 | 22,903 |
| 8 | 38 | NP_PRO_EF_GI | Net GI Plant - Production-Energy-Fuel | - | - |
| 9 | 39 | NP_PRO_ENF_GI | Net GI Plant - Production-Energy-Non-Fuel | - | - |
| 10 | 40 | NP_STO_PRO_D_GI | Net GI Plant - Storage-Production-Demand | - | - |
| 11 | 41 | NP_STO_TRA_D_GI | Net GI Plant - Storage-Transmission-Demand | - | - |
| 12 | 42 | NP_STO_DIS_DSUB_GI | Net GI Plant - Storage-Distribution-Demand-Subs | - | - |
| 13 | 43 | NP_STO_DIS_DPRI_GI | Net GI Plant - Storage-Distribution-Demand-Primary | - | - |
| 14 | 44 | NP_STO_DIS_DSEC_GI | Net GI Plant - Storage-Distribution-Demand-Secondary | - | - |
| 15 | 45 | NP_TRA_D_GI | Net GI Plant - Transmission-Demand | 547,274 | 7,883 |
| 16 | 46 | NP_DIS_DSUB_GI | Net GI Plant - Distribution-Demand-Subs | 481,106 | - |
| 17 | 47 | NP_DIS_DPRI_GI | Net GI Plant - Distribution-Demand-Primary | - | - |
| 18 | 48 | NP_DIS_DSEC_GI | Net GI Plant - Distribution-Demand-Secondary | - | - |
| 19 | 49 | NP_DIS_CSRV_GI | Net GI Plant - Distribution-Customer-Services | - | - |
| 20 | 50 | NP_DIS_CMTR_GI | Net GI Plant - Distribution-Customer-Meters | 33,097 | 4,728 |
| 21 | 51 | NP_DIS_CMTRR_GI | Net GI Plant - Distribution-Customer-Meter Reading | 484 | 69 |
| 22 | 52 | NP_DIS_CBIL_GI | Net GI Plant - Distribution-Customer-Billing & Collections | 662 | 95 |
| 23 | 53 | NP_DIS_CINF_GI | Net GI Plant - Distribution-Customer-Service & Info | - | - |
| 24 | 54 | NP_DIS_COTH_GI | Net GI Plant - Distribution-Customer-Other | 306,458 | 1,574 |
| 25 | 55 | NP_DIS_SVCSMTRS | Net Plant - Distribution-Customer-Services and Meters | | |
| 26 | 56 | 5819_PROD | Accts 581-589 - Production-Demand | - | - |
| 27 | 57 | 5819_PROEF | Accts 581-589 - Production-Energy-Fuel | - | - |
| 28 | 58 | 5819_PROENF | Accts 581-589 - Production-Energy-Non-Fuel | - | - |
| 29 | 59 | 5819_STO_PRO_D | Accts 581-589 - Storage-Production-Demand | - | - |
| 30 | 60 | 5819_STO_TRA_D | Accts 581-589 - Storage-Transmission-Demand | - | - |
| 31 | 61 | 5819_STO_DIS_DSUB | Accts 581-589 - Storage-Distribution-Demand-Subs | - | - |
| 32 | 62 | 5819_STO_DIS_DPRI | Accts 581-589 - Storage-Distribution-Demand-Primary | - | - |
| 33 | 63 | 5819_STO_DIS_DSEC | Accts 581-589 - Storage-Distribution-Demand-Secondary | - | - |
| 34 | 64 | 5819_TRAD | Accts 581-589 - Transmission-Demand | - | - |
| 35 | 65 | 5819_DISDSUB | Accts 581-589 - Distribution-Demand-Subs | 125,139 | - |
| 36 | 66 | 5819_DISDPRI | Accts 581-589 - Distribution-Demand-Primary | - | - |
| 37 | 67 | 5819_DISDSEC | Accts 581-589 - Distribution-Demand-Secondary | - | - |
| 38 | 68 | 5819_DISCSRV | Accts 581-589 - Distribution-Customer-Services | - | - |
| 39 | 69 | 5819_DISCMTR | Accts 581-589 - Distribution-Customer-Meters | 8,518 | 1,217 |
| 40 | 70 | 5819_DISCMTRR | Accts 581-589 - Distribution-Customer-Meter Reading | - | - |

**PUBLIC SERVICE OF NEW MEXICO**
**Base Period Ending June 30th, 2026**

| Class_Factors Line No. | Factor No. | | | Schedule 35B Lg Power Service | Schedule 36B Special Service Rate |
|---|---|---|---|---|---|
| 2 | 32 | NP_DIS_CMTRTOT | Net Plant with GI - Distribution-Customer-Meters | 62,300 | 71,200 |
| 3 | 33 | NP_DIS_CMTRRTOT | Net Plant with GI - Distribution-Customer-Meter Reading | 242 | 277 |
| 4 | 34 | NP_DIS_CBILTOT | Net Plant with GI - Distribution-Customer-Billing & Collections | 331 | 378 |
| 5 | 35 | NP_DIS_CINFTOT | Net Plant with GI - Distribution-Customer-Service & Info | - | - |
| 6 | 36 | NP_DIS_COTHTOT | Net Plant with GI - Distribution-Customer-Other | 75,987 | 213,322 |
| 7 | 37 | NP_PRO_D_GI | Net GI Plant - Production-Demand | 467,184 | - |
| 8 | 38 | NP_PRO_EF_GI | Net GI Plant - Production-Energy-Fuel | - | - |
| 9 | 39 | NP_PRO_ENF_GI | Net GI Plant - Production-Energy-Non-Fuel | - | - |
| 10 | 40 | NP_STO_PRO_D_GI | Net GI Plant - Storage-Production-Demand | - | - |
| 11 | 41 | NP_STO_TRA_D_GI | Net GI Plant - Storage-Transmission-Demand | - | - |
| 12 | 42 | NP_STO_DIS_DSUB_GI | Net GI Plant - Storage-Distribution-Demand-Subs | - | - |
| 13 | 43 | NP_STO_DIS_DPRI_GI | Net GI Plant - Storage-Distribution-Demand-Primary | - | - |
| 14 | 44 | NP_STO_DIS_DSEC_GI | Net GI Plant - Storage-Distribution-Demand-Secondary | - | - |
| 15 | 45 | NP_TRA_D_GI | Net GI Plant - Transmission-Demand | 146,085 | 1,525,946 |
| 16 | 46 | NP_DIS_DSUB_GI | Net GI Plant - Distribution-Demand-Subs | 148,510 | - |
| 17 | 47 | NP_DIS_DPRI_GI | Net GI Plant - Distribution-Demand-Primary | - | - |
| 18 | 48 | NP_DIS_DSEC_GI | Net GI Plant - Distribution-Demand-Secondary | - | - |
| 19 | 49 | NP_DIS_CSRV_GI | Net GI Plant - Distribution-Customer-Services | - | - |
| 20 | 50 | NP_DIS_CMTR_GI | Net GI Plant - Distribution-Customer-Meters | 16,548 | 18,912 |
| 21 | 51 | NP_DIS_CMTRR_GI | Net GI Plant - Distribution-Customer-Meter Reading | 242 | 277 |
| 22 | 52 | NP_DIS_CBIL_GI | Net GI Plant - Distribution-Customer-Billing & Collections | 331 | 378 |
| 23 | 53 | NP_DIS_CINF_GI | Net GI Plant - Distribution-Customer-Service & Info | - | - |
| 24 | 54 | NP_DIS_COTH_GI | Net GI Plant - Distribution-Customer-Other | 75,987 | 213,322 |
| 25 | 55 | NP_DIS_SVCSMTRS | Net Plant - Distribution-Customer-Services and Meters | | |
| 26 | 56 | 5819_PROD | Accts 581-589 - Production-Demand | - | - |
| 27 | 57 | 5819_PROEF | Accts 581-589 - Production-Energy-Fuel | - | - |
| 28 | 58 | 5819_PROENF | Accts 581-589 - Production-Energy-Non-Fuel | - | - |
| 29 | 59 | 5819_STO_PRO_D | Accts 581-589 - Storage-Production-Demand | - | - |
| 30 | 60 | 5819_STO_TRA_D | Accts 581-589 - Storage-Transmission-Demand | - | - |
| 31 | 61 | 5819_STO_DIS_DSUB | Accts 581-589 - Storage-Distribution-Demand-Subs | - | - |
| 32 | 62 | 5819_STO_DIS_DPRI | Accts 581-589 - Storage-Distribution-Demand-Primary | - | - |
| 33 | 63 | 5819_STO_DIS_DSEC | Accts 581-589 - Storage-Distribution-Demand-Secondary | - | - |
| 34 | 64 | 5819_TRAD | Accts 581-589 - Transmission-Demand | - | - |
| 35 | 65 | 5819_DISDSUB | Accts 581-589 - Distribution-Demand-Subs | 38,628 | - |
| 36 | 66 | 5819_DISDPRI | Accts 581-589 - Distribution-Demand-Primary | - | - |
| 37 | 67 | 5819_DISDSEC | Accts 581-589 - Distribution-Demand-Secondary | - | - |
| 38 | 68 | 5819_DISCSRV | Accts 581-589 - Distribution-Customer-Services | - | - |
| 39 | 69 | 5819_DISCMTR | Accts 581-589 - Distribution-Customer-Meters | 4,259 | 4,868 |
| 40 | 70 | 5819_DISCMTRR | Accts 581-589 - Distribution-Customer-Meter Reading | - | - |

This schedule is sponsored by PNM Witness Larkin

**PUBLIC SERVICE OF NEW MEXICO**
**Base Period Ending June 30th, 2026**

| Class_Factors Line No. | Factor No. | | | Schedule 6 Priv. Area Light | Schedule 20 Streetlighting |
|---|---|---|---|---|---|
| 2 | 32 | NP_DIS_CMTRTOT | Net Plant with GI - Distribution-Customer-Meters | - | - |
| 3 | 33 | NP_DIS_CMTRRTOT | Net Plant with GI - Distribution-Customer-Meter Reading | - | - |
| 4 | 34 | NP_DIS_CBILTOT | Net Plant with GI - Distribution-Customer-Billing & Collections | - | - |
| 5 | 35 | NP_DIS_CINFTOT | Net Plant with GI - Distribution-Customer-Service & Info | - | - |
| 6 | 36 | NP_DIS_COTHTOT | Net Plant with GI - Distribution-Customer-Other | 688,819 | 18,353,306 |
| 7 | 37 | NP_PRO_D_GI | Net GI Plant - Production-Demand | 12,360 | 33,497 |
| 8 | 38 | NP_PRO_EF_GI | Net GI Plant - Production-Energy-Fuel | - | - |
| 9 | 39 | NP_PRO_ENF_GI | Net GI Plant - Production-Energy-Non-Fuel | - | - |
| 10 | 40 | NP_STO_PRO_D_GI | Net GI Plant - Storage-Production-Demand | - | - |
| 11 | 41 | NP_STO_TRA_D_GI | Net GI Plant - Storage-Transmission-Demand | - | - |
| 12 | 42 | NP_STO_DIS_DSUB_GI | Net GI Plant - Storage-Distribution-Demand-Subs | - | - |
| 13 | 43 | NP_STO_DIS_DPRI_GI | Net GI Plant - Storage-Distribution-Demand-Primary | - | - |
| 14 | 44 | NP_STO_DIS_DSEC_GI | Net GI Plant - Storage-Distribution-Demand-Secondary | - | - |
| 15 | 45 | NP_TRA_D_GI | Net GI Plant - Transmission-Demand | 10,720 | 28,266 |
| 16 | 46 | NP_DIS_DSUB_GI | Net GI Plant - Distribution-Demand-Subs | 22,965 | 78,594 |
| 17 | 47 | NP_DIS_DPRI_GI | Net GI Plant - Distribution-Demand-Primary | 60,845 | 208,231 |
| 18 | 48 | NP_DIS_DSEC_GI | Net GI Plant - Distribution-Demand-Secondary | 31,449 | 107,629 |
| 19 | 49 | NP_DIS_CSRV_GI | Net GI Plant - Distribution-Customer-Services | - | - |
| 20 | 50 | NP_DIS_CMTR_GI | Net GI Plant - Distribution-Customer-Meters | - | - |
| 21 | 51 | NP_DIS_CMTRR_GI | Net GI Plant - Distribution-Customer-Meter Reading | - | - |
| 22 | 52 | NP_DIS_CBIL_GI | Net GI Plant - Distribution-Customer-Billing & Collections | - | - |
| 23 | 53 | NP_DIS_CINF_GI | Net GI Plant - Distribution-Customer-Service & Info | - | - |
| 24 | 54 | NP_DIS_COTH_GI | Net GI Plant - Distribution-Customer-Other | 117,909 | 427,844 |
| 25 | 55 | NP_DIS_SVCSMTRS | Net Plant - Distribution-Customer-Services and Meters | | |
| 26 | 56 | 5819_PROD | Accts 581-589 - Production-Demand | - | - |
| 27 | 57 | 5819_PROEF | Accts 581-589 - Production-Energy-Fuel | - | - |
| 28 | 58 | 5819_PROENF | Accts 581-589 - Production-Energy-Non-Fuel | - | - |
| 29 | 59 | 5819_STO_PRO_D | Accts 581-589 - Storage-Production-Demand | - | - |
| 30 | 60 | 5819_STO_TRA_D | Accts 581-589 - Storage-Transmission-Demand | - | - |
| 31 | 61 | 5819_STO_DIS_DSUB | Accts 581-589 - Storage-Distribution-Demand-Subs | - | - |
| 32 | 62 | 5819_STO_DIS_DPRI | Accts 581-589 - Storage-Distribution-Demand-Primary | - | - |
| 33 | 63 | 5819_STO_DIS_DSEC | Accts 581-589 - Storage-Distribution-Demand-Secondary | - | - |
| 34 | 64 | 5819_TRAD | Accts 581-589 - Transmission-Demand | - | - |
| 35 | 65 | 5819_DISDSUB | Accts 581-589 - Distribution-Demand-Subs | 5,973 | 20,443 |
| 36 | 66 | 5819_DISDPRI | Accts 581-589 - Distribution-Demand-Primary | 17,041 | 58,320 |
| 37 | 67 | 5819_DISDSEC | Accts 581-589 - Distribution-Demand-Secondary | 8,808 | 30,144 |
| 38 | 68 | 5819_DISCSRV | Accts 581-589 - Distribution-Customer-Services | - | - |
| 39 | 69 | 5819_DISCMTR | Accts 581-589 - Distribution-Customer-Meters | - | - |
| 40 | 70 | 5819_DISCMTRR | Accts 581-589 - Distribution-Customer-Meter Reading | - | - |

This schedule is sponsored by PNM Witness Larkin

**PUBLIC SERVICE OF NEW MEXICO**
**Base Period Ending June 30th, 2026**

| Line No. | Factor No. | Class_Factors | | dule 20-Customer O |
|---|---|---|---|---|
| | | | | Streetlighting |
| 2 | 32 | NP_DIS_CMTRTOT | Net Plant with GI - Distribution-Customer-Meters | - |
| 3 | 33 | NP_DIS_CMTRRTOT | Net Plant with GI - Distribution-Customer-Meter Reading | - |
| 4 | 34 | NP_DIS_CBILTOT | Net Plant with GI - Distribution-Customer-Billing & Collections | - |
| 5 | 35 | NP_DIS_CINFTOT | Net Plant with GI - Distribution-Customer-Service & Info | - |
| 6 | 36 | NP_DIS_COTHTOT | Net Plant with GI - Distribution-Customer-Other | 0 |
| 7 | 37 | NP_PRO_D_GI | Net GI Plant - Production-Demand | 0 |
| 8 | 38 | NP_PRO_EF_GI | Net GI Plant - Production-Energy-Fuel | - |
| 9 | 39 | NP_PRO_ENF_GI | Net GI Plant - Production-Energy-Non-Fuel | - |
| 10 | 40 | NP_STO_PRO_D_GI | Net GI Plant - Storage-Production-Demand | - |
| 11 | 41 | NP_STO_TRA_D_GI | Net GI Plant - Storage-Transmission-Demand | - |
| 12 | 42 | NP_STO_DIS_DSUB_GI | Net GI Plant - Storage-Distribution-Demand-Subs | - |
| 13 | 43 | NP_STO_DIS_DPRI_GI | Net GI Plant - Storage-Distribution-Demand-Primary | - |
| 14 | 44 | NP_STO_DIS_DSEC_GI | Net GI Plant - Storage-Distribution-Demand-Secondary | - |
| 15 | 45 | NP_TRA_D_GI | Net GI Plant - Transmission-Demand | 0 |
| 16 | 46 | NP_DIS_DSUB_GI | Net GI Plant - Distribution-Demand-Subs | 0 |
| 17 | 47 | NP_DIS_DPRI_GI | Net GI Plant - Distribution-Demand-Primary | 0 |
| 18 | 48 | NP_DIS_DSEC_GI | Net GI Plant - Distribution-Demand-Secondary | 0 |
| 19 | 49 | NP_DIS_CSRV_GI | Net GI Plant - Distribution-Customer-Services | - |
| 20 | 50 | NP_DIS_CMTR_GI | Net GI Plant - Distribution-Customer-Meters | - |
| 21 | 51 | NP_DIS_CMTRR_GI | Net GI Plant - Distribution-Customer-Meter Reading | - |
| 22 | 52 | NP_DIS_CBIL_GI | Net GI Plant - Distribution-Customer-Billing & Collections | - |
| 23 | 53 | NP_DIS_CINF_GI | Net GI Plant - Distribution-Customer-Service & Info | - |
| 24 | 54 | NP_DIS_COTH_GI | Net GI Plant - Distribution-Customer-Other | 0 |
| 25 | 55 | NP_DIS_SVCSMTRS | Net Plant - Distribution-Customer-Services and Meters | |
| 26 | 56 | 5819_PROD | Accts 581-589 - Production-Demand | - |
| 27 | 57 | 5819_PROEF | Accts 581-589 - Production-Energy-Fuel | - |
| 28 | 58 | 5819_PROENF | Accts 581-589 - Production-Energy-Non-Fuel | - |
| 29 | 59 | 5819_STO_PRO_D | Accts 581-589 - Storage-Production-Demand | - |
| 30 | 60 | 5819_STO_TRA_D | Accts 581-589 - Storage-Transmission-Demand | - |
| 31 | 61 | 5819_STO_DIS_DSUB | Accts 581-589 - Storage-Distribution-Demand-Subs | - |
| 32 | 62 | 5819_STO_DIS_DPRI | Accts 581-589 - Storage-Distribution-Demand-Primary | - |
| 33 | 63 | 5819_STO_DIS_DSEC | Accts 581-589 - Storage-Distribution-Demand-Secondary | - |
| 34 | 64 | 5819_TRAD | Accts 581-589 - Transmission-Demand | - |
| 35 | 65 | 5819_DISDSUB | Accts 581-589 - Distribution-Demand-Subs | 0 |
| 36 | 66 | 5819_DISDPRI | Accts 581-589 - Distribution-Demand-Primary | 0 |
| 37 | 67 | 5819_DISDSEC | Accts 581-589 - Distribution-Demand-Secondary | 0 |
| 38 | 68 | 5819_DISCSRV | Accts 581-589 - Distribution-Customer-Services | - |
| 39 | 69 | 5819_DISCMTR | Accts 581-589 - Distribution-Customer-Meters | - |
| 40 | 70 | 5819_DISCMTRR | Accts 581-589 - Distribution-Customer-Meter Reading | - |

This schedule is sponsored by PNM Witness Larkin

**PUBLIC SERVICE OF NEW MEXICO**
**Base Period Ending June 30th, 2026**

| Line No. | Class_Factors Factor No. | | | Other Input |
|---|---|---|---|---|
| 41 | 71 | 5819_DISCBIL | Accts 581-589 - Distribution-Customer-Billing & Collections | |
| 42 | 72 | 5819_DISCINF | Accts 581-589 - Distribution-Customer-Service & Info | |
| 43 | 73 | 5819_DISCOTH | Accts 581-589 - Distribution-Customer-Other | |
| 44 | 74 | 5918_PROD | Accts 591-598 - Production-Demand | |
| 45 | 75 | 5918_PROEF | Accts 591-598 - Production-Energy-Fuel | |
| 46 | 76 | 5918_PROENF | Accts 591-598 - Production-Energy-Non-Fuel | |
| 47 | 77 | 5918_STO_PRO_D | Accts 591-598 - Storage-Production-Demand | |
| 48 | 78 | 5918_STO_TRA_D | Accts 591-598 - Storage-Transmission-Demand | |
| 49 | 79 | 5918_STO_DIS_DSUB | Accts 591-598 - Storage-Distribution-Demand-Subs | |
| 50 | 80 | 5918_STO_DIS_DPRI | Accts 591-598 - Storage-Distribution-Demand-Primary | |
| 51 | 81 | 5918_STO_DIS_DSEC | Accts 591-598 - Storage-Distribution-Demand-Secondary | |
| 52 | 82 | 5918_TRAD | Accts 591-598 - Transmission-Demand | |
| 53 | 83 | 5918_DISDSUB | Accts 591-598 - Distribution-Demand-Subs | |
| 54 | 84 | 5918_DISDPRI | Accts 591-598 - Distribution-Demand-Primary | |
| 55 | 85 | 5918_DISDSEC | Accts 591-598 - Distribution-Demand-Secondary | |
| 56 | 86 | 5918_DISCSRV | Accts 591-598 - Distribution-Customer-Services | |
| 57 | 87 | 5918_DISCMTR | Accts 591-598 - Distribution-Customer-Meters | |
| 58 | 88 | 5918_DISCMTRR | Accts 591-598 - Distribution-Customer-Meter Reading | |
| 59 | 89 | 5918_DISCBIL | Accts 591-598 - Distribution-Customer-Billing & Collections | |
| 60 | 90 | 5918_DISCINF | Accts 591-598 - Distribution-Customer-Service & Info | |
| 61 | 91 | 5918_DISCOTH | Accts 591-598 - Distribution-Customer-Other | |
| 62 | 92 | CACT_DISCMTRR | Cust Accts - Distribution-Customer-Meter Reading | |
| 63 | 93 | CACT_DISCBIL | Cust Accts - Distribution-Customer-Billing & Collections | |
| 64 | 94 | CACT_DISCINF | Cust Accts - Distribution-Customer-Service & Info | |
| 65 | 95 | CACT_DISCOTH | Cust Accts - Distribution-Customer-Other | |
| 66 | 96 | LA_PROD | Labor - Production-Demand | |
| 67 | 97 | LA_PROEF | Labor - Production-Energy-Fuel | |
| 68 | 98 | LA_PROENF | Labor - Production-Energy-Non-Fuel | |
| 69 | 99 | LA_STO_PRO_D | Labor - Storage-Production-Demand | |
| 70 | 100 | LA_STO_TRA_D | Labor - Storage-Transmission-Demand | |
| 71 | 101 | LA_STO_DIS_DSUB | Labor - Storage-Distribution-Demand-Subs | |
| 72 | 102 | LA_STO_DIS_DPRI | Labor - Storage-Distribution-Demand-Primary | |
| 73 | 103 | LA_STO_DIS_DSEC | Labor - Storage-Distribution-Demand-Secondary | |
| 74 | 104 | LA_TRAD | Labor - Transmission-Demand | |
| 75 | 105 | LA_DISDSUB | Labor - Distribution-Demand-Subs | |
| 76 | 106 | LA_DISDPRI | Labor - Distribution-Demand-Primary | |
| 77 | 107 | LA_DISDSEC | Labor - Distribution-Demand-Secondary | |
| 78 | 108 | LA_DISCSRV | Labor - Distribution-Customer-Services | |
| 1 | 109 | LA_DISCMTR | Labor - Distribution-Customer-Meters | |

**PUBLIC SERVICE OF NEW MEXICO**
**Base Period Ending June 30th, 2026**

| Class_Factors Line No. | Factor No. | | | PNM Retail | Schedule 1 Residential |
|---|---|---|---|---|---|
| 41 | 71 | 5819_DISCBIL | Accts 581-589 - Distribution-Customer-Billing & Collections | - | - |
| 42 | 72 | 5819_DISCINF | Accts 581-589 - Distribution-Customer-Service & Info | - | - |
| 43 | 73 | 5819_DISCOTH | Accts 581-589 - Distribution-Customer-Other | 10,690 | 4,418 |
| 44 | 74 | 5918_PROD | Accts 591-598 - Production-Demand | - | - |
| 45 | 75 | 5918_PROEF | Accts 591-598 - Production-Energy-Fuel | - | - |
| 46 | 76 | 5918_PROENF | Accts 591-598 - Production-Energy-Non-Fuel | - | - |
| 47 | 77 | 5918_STO_PRO_D | Accts 591-598 - Storage-Production-Demand | - | - |
| 48 | 78 | 5918_STO_TRA_D | Accts 591-598 - Storage-Transmission-Demand | - | - |
| 49 | 79 | 5918_STO_DIS_DSUB | Accts 591-598 - Storage-Distribution-Demand-Subs | - | - |
| 50 | 80 | 5918_STO_DIS_DPRI | Accts 591-598 - Storage-Distribution-Demand-Primary | - | - |
| 51 | 81 | 5918_STO_DIS_DSEC | Accts 591-598 - Storage-Distribution-Demand-Secondary | - | - |
| 52 | 82 | 5918_TRAD | Accts 591-598 - Transmission-Demand | - | - |
| 53 | 83 | 5918_DISDSUB | Accts 591-598 - Distribution-Demand-Subs | 2,474,526 | 1,267,068 |
| 54 | 84 | 5918_DISDPRI | Accts 591-598 - Distribution-Demand-Primary | 9,071,076 | 4,890,500 |
| 55 | 85 | 5918_DISDSEC | Accts 591-598 - Distribution-Demand-Secondary | 4,239,127 | 2,527,767 |
| 56 | 86 | 5918_DISCSRV | Accts 591-598 - Distribution-Customer-Services | 2,801 | 2,561 |
| 57 | 87 | 5918_DISCMTR | Accts 591-598 - Distribution-Customer-Meters | 1,100,819 | 708,719 |
| 58 | 88 | 5918_DISCMTRR | Accts 591-598 - Distribution-Customer-Meter Reading | - | - |
| 59 | 89 | 5918_DISCBIL | Accts 591-598 - Distribution-Customer-Billing & Collections | - | - |
| 60 | 90 | 5918_DISCINF | Accts 591-598 - Distribution-Customer-Service & Info | - | - |
| 61 | 91 | 5918_DISCOTH | Accts 591-598 - Distribution-Customer-Other | 362 | 150 |
| 62 | 92 | CACT_DISCMTRR | Cust Accts - Distribution-Customer-Meter Reading | 8,588,886 | 7,680,530 |
| 63 | 93 | CACT_DISCBIL | Cust Accts - Distribution-Customer-Billing & Collections | 11,739,680 | 10,498,098 |
| 64 | 94 | CACT_DISCINF | Cust Accts - Distribution-Customer-Service & Info | - | - |
| 65 | 95 | CACT_DISCOTH | Cust Accts - Distribution-Customer-Other | (236,289) | (187,266) |
| 66 | 96 | LA_PROD | Labor - Production-Demand | 11,750,190 | 5,921,271 |
| 67 | 97 | LA_PROEF | Labor - Production-Energy-Fuel | - | - |
| 68 | 98 | LA_PROENF | Labor - Production-Energy-Non-Fuel | - | - |
| 69 | 99 | LA_STO_PRO_D | Labor - Storage-Production-Demand | - | - |
| 70 | 100 | LA_STO_TRA_D | Labor - Storage-Transmission-Demand | - | - |
| 71 | 101 | LA_STO_DIS_DSUB | Labor - Storage-Distribution-Demand-Subs | - | - |
| 72 | 102 | LA_STO_DIS_DPRI | Labor - Storage-Distribution-Demand-Primary | - | - |
| 73 | 103 | LA_STO_DIS_DSEC | Labor - Storage-Distribution-Demand-Secondary | - | - |
| 74 | 104 | LA_TRAD | Labor - Transmission-Demand | 3,750,541 | 1,620,277 |
| 75 | 105 | LA_DISDSUB | Labor - Distribution-Demand-Subs | 3,274,658 | 1,676,771 |
| 76 | 106 | LA_DISDPRI | Labor - Distribution-Demand-Primary | 8,240,152 | 4,442,523 |
| 77 | 107 | LA_DISDSEC | Labor - Distribution-Demand-Secondary | 3,850,817 | 2,296,220 |
| 78 | 108 | LA_DISCSRV | Labor - Distribution-Customer-Services | 533,939 | 488,178 |
| 1 | 109 | LA_DISCMTR | Labor - Distribution-Customer-Meters | 5,186,816 | 3,339,328 |

This schedule is sponsored by PNM Witness Larkin

**PUBLIC SERVICE OF NEW MEXICO**
**Base Period Ending June 30th, 2026**

| Class_Factors Line No. | Factor No. | | | Schedule 1B Residential | Schedule 2 Small Power |
|---|---|---|---|---|---|
| 41 | 71 | 5819_DISCBIL | Accts 581-589 - Distribution-Customer-Billing & Collections | - | - |
| 42 | 72 | 5819_DISCINF | Accts 581-589 - Distribution-Customer-Service & Info | - | - |
| 43 | 73 | 5819_DISCOTH | Accts 581-589 - Distribution-Customer-Other | 0 | 559 |
| 44 | 74 | 5918_PROD | Accts 591-598 - Production-Demand | - | - |
| 45 | 75 | 5918_PROEF | Accts 591-598 - Production-Energy-Fuel | - | - |
| 46 | 76 | 5918_PROENF | Accts 591-598 - Production-Energy-Non-Fuel | - | - |
| 47 | 77 | 5918_STO_PRO_D | Accts 591-598 - Storage-Production-Demand | - | - |
| 48 | 78 | 5918_STO_TRA_D | Accts 591-598 - Storage-Transmission-Demand | - | - |
| 49 | 79 | 5918_STO_DIS_DSUB | Accts 591-598 - Storage-Distribution-Demand-Subs | - | - |
| 50 | 80 | 5918_STO_DIS_DPRI | Accts 591-598 - Storage-Distribution-Demand-Primary | - | - |
| 51 | 81 | 5918_STO_DIS_DSEC | Accts 591-598 - Storage-Distribution-Demand-Secondary | - | - |
| 52 | 82 | 5918_TRAD | Accts 591-598 - Transmission-Demand | - | - |
| 53 | 83 | 5918_DISDSUB | Accts 591-598 - Distribution-Demand-Subs | 0 | 306,097 |
| 54 | 84 | 5918_DISDPRI | Accts 591-598 - Distribution-Demand-Primary | 0 | 1,181,441 |
| 55 | 85 | 5918_DISDSEC | Accts 591-598 - Distribution-Demand-Secondary | 0 | 610,655 |
| 56 | 86 | 5918_DISCSRV | Accts 591-598 - Distribution-Customer-Services | 0 | 240 |
| 57 | 87 | 5918_DISCMTR | Accts 591-598 - Distribution-Customer-Meters | 0 | 229,784 |
| 58 | 88 | 5918_DISCMTRR | Accts 591-598 - Distribution-Customer-Meter Reading | - | - |
| 59 | 89 | 5918_DISCBIL | Accts 591-598 - Distribution-Customer-Billing & Collections | - | - |
| 60 | 90 | 5918_DISCINF | Accts 591-598 - Distribution-Customer-Service & Info | - | - |
| 61 | 91 | 5918_DISCOTH | Accts 591-598 - Distribution-Customer-Other | 0 | 19 |
| 62 | 92 | CACT_DISCMTRR | Cust Accts - Distribution-Customer-Meter Reading | - | 831,794 |
| 63 | 93 | CACT_DISCBIL | Cust Accts - Distribution-Customer-Billing & Collections | - | 1,136,933 |
| 64 | 94 | CACT_DISCINF | Cust Accts - Distribution-Customer-Service & Info | - | - |
| 65 | 95 | CACT_DISCOTH | Cust Accts - Distribution-Customer-Other | - | (23,692) |
| 66 | 96 | LA_PROD | Labor - Production-Demand | 0 | 1,332,223 |
| 67 | 97 | LA_PROEF | Labor - Production-Energy-Fuel | - | - |
| 68 | 98 | LA_PROENF | Labor - Production-Energy-Non-Fuel | - | - |
| 69 | 99 | LA_STO_PRO_D | Labor - Storage-Production-Demand | - | - |
| 70 | 100 | LA_STO_TRA_D | Labor - Storage-Transmission-Demand | - | - |
| 71 | 101 | LA_STO_DIS_DSUB | Labor - Storage-Distribution-Demand-Subs | - | - |
| 72 | 102 | LA_STO_DIS_DPRI | Labor - Storage-Distribution-Demand-Primary | - | - |
| 73 | 103 | LA_STO_DIS_DSEC | Labor - Storage-Distribution-Demand-Secondary | - | - |
| 74 | 104 | LA_TRAD | Labor - Transmission-Demand | 0 | 373,888 |
| 75 | 105 | LA_DISDSUB | Labor - Distribution-Demand-Subs | 0 | 405,072 |
| 76 | 106 | LA_DISDPRI | Labor - Distribution-Demand-Primary | 0 | 1,073,219 |
| 77 | 107 | LA_DISDSEC | Labor - Distribution-Demand-Secondary | 0 | 554,718 |
| 78 | 108 | LA_DISCSRV | Labor - Distribution-Customer-Services | 0 | 45,761 |
| 1 | 109 | LA_DISCMTR | Labor - Distribution-Customer-Meters | 0 | 1,082,690 |

This schedule is sponsored by PNM Witness Larkin

**PUBLIC SERVICE OF NEW MEXICO**
**Base Period Ending June 30th, 2026**

| Class_Factors Line No. | Factor No. | | | Schedule 2B Small Power | Schedule 3B General Power |
|---|---|---|---|---|---|
| 41 | 71 | 5819_DISCBIL | Accts 581-589 - Distribution-Customer-Billing & Collections | - | - |
| 42 | 72 | 5819_DISCINF | Accts 581-589 - Distribution-Customer-Service & Info | - | - |
| 43 | 73 | 5819_DISCOTH | Accts 581-589 - Distribution-Customer-Other | 0 | 208 |
| 44 | 74 | 5918_PROD | Accts 591-598 - Production-Demand | - | - |
| 45 | 75 | 5918_PROEF | Accts 591-598 - Production-Energy-Fuel | - | - |
| 46 | 76 | 5918_PROENF | Accts 591-598 - Production-Energy-Non-Fuel | - | - |
| 47 | 77 | 5918_STO_PRO_D | Accts 591-598 - Storage-Production-Demand | - | - |
| 48 | 78 | 5918_STO_TRA_D | Accts 591-598 - Storage-Transmission-Demand | - | - |
| 49 | 79 | 5918_STO_DIS_DSUB | Accts 591-598 - Storage-Distribution-Demand-Subs | - | - |
| 50 | 80 | 5918_STO_DIS_DPRI | Accts 591-598 - Storage-Distribution-Demand-Primary | - | - |
| 51 | 81 | 5918_STO_DIS_DSEC | Accts 591-598 - Storage-Distribution-Demand-Secondary | - | - |
| 52 | 82 | 5918_TRAD | Accts 591-598 - Transmission-Demand | - | - |
| 53 | 83 | 5918_DISDSUB | Accts 591-598 - Distribution-Demand-Subs | 0 | 370,853 |
| 54 | 84 | 5918_DISDPRI | Accts 591-598 - Distribution-Demand-Primary | 0 | 1,431,383 |
| 55 | 85 | 5918_DISDSEC | Accts 591-598 - Distribution-Demand-Secondary | 0 | 739,843 |
| 56 | 86 | 5918_DISCSRV | Accts 591-598 - Distribution-Customer-Services | 0 | - |
| 57 | 87 | 5918_DISCMTR | Accts 591-598 - Distribution-Customer-Meters | 0 | 69,065 |
| 58 | 88 | 5918_DISCMTRR | Accts 591-598 - Distribution-Customer-Meter Reading | - | - |
| 59 | 89 | 5918_DISCBIL | Accts 591-598 - Distribution-Customer-Billing & Collections | - | - |
| 60 | 90 | 5918_DISCINF | Accts 591-598 - Distribution-Customer-Service & Info | - | - |
| 61 | 91 | 5918_DISCOTH | Accts 591-598 - Distribution-Customer-Other | 0 | 7 |
| 62 | 92 | CACT_DISCMTRR | Cust Accts - Distribution-Customer-Meter Reading | - | 43,102 |
| 63 | 93 | CACT_DISCBIL | Cust Accts - Distribution-Customer-Billing & Collections | - | 58,913 |
| 64 | 94 | CACT_DISCINF | Cust Accts - Distribution-Customer-Service & Info | - | - |
| 65 | 95 | CACT_DISCOTH | Cust Accts - Distribution-Customer-Other | - | (8,816) |
| 66 | 96 | LA_PROD | Labor - Production-Demand | 0 | 1,941,067 |
| 67 | 97 | LA_PROEF | Labor - Production-Energy-Fuel | - | - |
| 68 | 98 | LA_PROENF | Labor - Production-Energy-Non-Fuel | - | - |
| 69 | 99 | LA_STO_PRO_D | Labor - Storage-Production-Demand | - | - |
| 70 | 100 | LA_STO_TRA_D | Labor - Storage-Transmission-Demand | - | - |
| 71 | 101 | LA_STO_DIS_DSUB | Labor - Storage-Distribution-Demand-Subs | - | - |
| 72 | 102 | LA_STO_DIS_DPRI | Labor - Storage-Distribution-Demand-Primary | - | - |
| 73 | 103 | LA_STO_DIS_DSEC | Labor - Storage-Distribution-Demand-Secondary | - | - |
| 74 | 104 | LA_TRAD | Labor - Transmission-Demand | 0 | 554,467 |
| 75 | 105 | LA_DISDSUB | Labor - Distribution-Demand-Subs | 0 | 490,768 |
| 76 | 106 | LA_DISDPRI | Labor - Distribution-Demand-Primary | 0 | 1,300,266 |
| 77 | 107 | LA_DISDSEC | Labor - Distribution-Demand-Secondary | 0 | 672,072 |
| 78 | 108 | LA_DISCSRV | Labor - Distribution-Customer-Services | 0 | - |
| 1 | 109 | LA_DISCMTR | Labor - Distribution-Customer-Meters | 0 | 325,419 |

This schedule is sponsored by PNM Witness Larkin

**PUBLIC SERVICE OF NEW MEXICO**
**Base Period Ending June 30th, 2026**

| Class_Factors Line No. | Factor No. | | | Schedule 3C GP Low LF | Schedule 3D General Power Gov |
|---|---|---|---|---|---|
| 41 | 71 | 5819_DISCBIL | Accts 581-589 - Distribution-Customer-Billing & Collections | - | - |
| 42 | 72 | 5819_DISCINF | Accts 581-589 - Distribution-Customer-Service & Info | - | - |
| 43 | 73 | 5819_DISCOTH | Accts 581-589 - Distribution-Customer-Other | 52 | 15 |
| 44 | 74 | 5918_PROD | Accts 591-598 - Production-Demand | - | - |
| 45 | 75 | 5918_PROEF | Accts 591-598 - Production-Energy-Fuel | - | - |
| 46 | 76 | 5918_PROENF | Accts 591-598 - Production-Energy-Non-Fuel | - | - |
| 47 | 77 | 5918_STO_PRO_D | Accts 591-598 - Storage-Production-Demand | - | - |
| 48 | 78 | 5918_STO_TRA_D | Accts 591-598 - Storage-Transmission-Demand | - | - |
| 49 | 79 | 5918_STO_DIS_DSUB | Accts 591-598 - Storage-Distribution-Demand-Subs | - | - |
| 50 | 80 | 5918_STO_DIS_DPRI | Accts 591-598 - Storage-Distribution-Demand-Primary | - | - |
| 51 | 81 | 5918_STO_DIS_DSEC | Accts 591-598 - Storage-Distribution-Demand-Secondary | - | - |
| 52 | 82 | 5918_TRAD | Accts 591-598 - Transmission-Demand | - | - |
| 53 | 83 | 5918_DISDSUB | Accts 591-598 - Distribution-Demand-Subs | 113,670 | 24,900 |
| 54 | 84 | 5918_DISDPRI | Accts 591-598 - Distribution-Demand-Primary | 438,731 | 96,108 |
| 55 | 85 | 5918_DISDSEC | Accts 591-598 - Distribution-Demand-Secondary | 226,768 | 49,676 |
| 56 | 86 | 5918_DISCSRV | Accts 591-598 - Distribution-Customer-Services | - | - |
| 57 | 87 | 5918_DISCMTR | Accts 591-598 - Distribution-Customer-Meters | 30,284 | 4,274 |
| 58 | 88 | 5918_DISCMTRR | Accts 591-598 - Distribution-Customer-Meter Reading | - | - |
| 59 | 89 | 5918_DISCBIL | Accts 591-598 - Distribution-Customer-Billing & Collections | - | - |
| 60 | 90 | 5918_DISCINF | Accts 591-598 - Distribution-Customer-Service & Info | - | - |
| 61 | 91 | 5918_DISCOTH | Accts 591-598 - Distribution-Customer-Other | 2 | 0 |
| 62 | 92 | CACT_DISCMTRR | Cust Accts - Distribution-Customer-Meter Reading | 18,899 | 2,667 |
| 63 | 93 | CACT_DISCBIL | Cust Accts - Distribution-Customer-Billing & Collections | 25,832 | 3,645 |
| 64 | 94 | CACT_DISCINF | Cust Accts - Distribution-Customer-Service & Info | - | - |
| 65 | 95 | CACT_DISCOTH | Cust Accts - Distribution-Customer-Other | (2,199) | (622) |
| 66 | 96 | LA_PROD | Labor - Production-Demand | 409,622 | 131,677 |
| 67 | 97 | LA_PROEF | Labor - Production-Energy-Fuel | - | - |
| 68 | 98 | LA_PROENF | Labor - Production-Energy-Non-Fuel | - | - |
| 69 | 99 | LA_STO_PRO_D | Labor - Storage-Production-Demand | - | - |
| 70 | 100 | LA_STO_TRA_D | Labor - Storage-Transmission-Demand | - | - |
| 71 | 101 | LA_STO_DIS_DSUB | Labor - Storage-Distribution-Demand-Subs | - | - |
| 72 | 102 | LA_STO_DIS_DPRI | Labor - Storage-Distribution-Demand-Primary | - | - |
| 73 | 103 | LA_STO_DIS_DSEC | Labor - Storage-Distribution-Demand-Secondary | - | - |
| 74 | 104 | LA_TRAD | Labor - Transmission-Demand | 112,344 | 38,057 |
| 75 | 105 | LA_DISDSUB | Labor - Distribution-Demand-Subs | 150,424 | 32,952 |
| 76 | 106 | LA_DISDPRI | Labor - Distribution-Demand-Primary | 398,542 | 87,305 |
| 77 | 107 | LA_DISDSEC | Labor - Distribution-Demand-Secondary | 205,996 | 45,125 |
| 78 | 108 | LA_DISCSRV | Labor - Distribution-Customer-Services | - | - |
| 1 | 109 | LA_DISCMTR | Labor - Distribution-Customer-Meters | 142,689 | 20,136 |

This schedule is sponsored by PNM Witness Larkin

**PUBLIC SERVICE OF NEW MEXICO**
**Base Period Ending June 30th, 2026**

| Class_Factors Line No. | Factor No. | | | Schedule 3E GP Low LF Gov |
|---|---|---|---|---|
| 41 | 71 | 5819_DISCBIL | Accts 581-589 - Distribution-Customer-Billing & Collections | - |
| 42 | 72 | 5819_DISCINF | Accts 581-589 - Distribution-Customer-Service & Info | - |
| 43 | 73 | 5819_DISCOTH | Accts 581-589 - Distribution-Customer-Other | 4 |
| 44 | 74 | 5918_PROD | Accts 591-598 - Production-Demand | - |
| 45 | 75 | 5918_PROEF | Accts 591-598 - Production-Energy-Fuel | - |
| 46 | 76 | 5918_PROENF | Accts 591-598 - Production-Energy-Non-Fuel | - |
| 47 | 77 | 5918_STO_PRO_D | Accts 591-598 - Storage-Production-Demand | - |
| 48 | 78 | 5918_STO_TRA_D | Accts 591-598 - Storage-Transmission-Demand | - |
| 49 | 79 | 5918_STO_DIS_DSUB | Accts 591-598 - Storage-Distribution-Demand-Subs | - |
| 50 | 80 | 5918_STO_DIS_DPRI | Accts 591-598 - Storage-Distribution-Demand-Primary | - |
| 51 | 81 | 5918_STO_DIS_DSEC | Accts 591-598 - Storage-Distribution-Demand-Secondary | - |
| 52 | 82 | 5918_TRAD | Accts 591-598 - Transmission-Demand | - |
| 53 | 83 | 5918_DISDSUB | Accts 591-598 - Distribution-Demand-Subs | 10,196 |
| 54 | 84 | 5918_DISDPRI | Accts 591-598 - Distribution-Demand-Primary | 39,355 |
| 55 | 85 | 5918_DISDSEC | Accts 591-598 - Distribution-Demand-Secondary | 20,341 |
| 56 | 86 | 5918_DISCSRV | Accts 591-598 - Distribution-Customer-Services | - |
| 57 | 87 | 5918_DISCMTR | Accts 591-598 - Distribution-Customer-Meters | 1,768 |
| 58 | 88 | 5918_DISCMTRR | Accts 591-598 - Distribution-Customer-Meter Reading | - |
| 59 | 89 | 5918_DISCBIL | Accts 591-598 - Distribution-Customer-Billing & Collections | - |
| 60 | 90 | 5918_DISCINF | Accts 591-598 - Distribution-Customer-Service & Info | - |
| 61 | 91 | 5918_DISCOTH | Accts 591-598 - Distribution-Customer-Other | 0 |
| 62 | 92 | CACT_DISCMTRR | Cust Accts - Distribution-Customer-Meter Reading | 1,104 |
| 63 | 93 | CACT_DISCBIL | Cust Accts - Distribution-Customer-Billing & Collections | 1,508 |
| 64 | 94 | CACT_DISCINF | Cust Accts - Distribution-Customer-Service & Info | - |
| 65 | 95 | CACT_DISCOTH | Cust Accts - Distribution-Customer-Other | (157) |
| 66 | 96 | LA_PROD | Labor - Production-Demand | 33,778 |
| 67 | 97 | LA_PROEF | Labor - Production-Energy-Fuel | - |
| 68 | 98 | LA_PROENF | Labor - Production-Energy-Non-Fuel | - |
| 69 | 99 | LA_STO_PRO_D | Labor - Storage-Production-Demand | - |
| 70 | 100 | LA_STO_TRA_D | Labor - Storage-Transmission-Demand | - |
| 71 | 101 | LA_STO_DIS_DSUB | Labor - Storage-Distribution-Demand-Subs | - |
| 72 | 102 | LA_STO_DIS_DPRI | Labor - Storage-Distribution-Demand-Primary | - |
| 73 | 103 | LA_STO_DIS_DSEC | Labor - Storage-Distribution-Demand-Secondary | - |
| 74 | 104 | LA_TRAD | Labor - Transmission-Demand | 9,043 |
| 75 | 105 | LA_DISDSUB | Labor - Distribution-Demand-Subs | 13,493 |
| 76 | 106 | LA_DISDPRI | Labor - Distribution-Demand-Primary | 35,750 |
| 77 | 107 | LA_DISDSEC | Labor - Distribution-Demand-Secondary | 18,478 |
| 78 | 108 | LA_DISCSRV | Labor - Distribution-Customer-Services | - |
| 1 | 109 | LA_DISCMTR | Labor - Distribution-Customer-Meters | 8,332 |

This schedule is sponsored by PNM Witness Larkin

**PUBLIC SERVICE OF NEW MEXICO**
**Base Period Ending June 30th, 2026**

| Class_Factors Line No. | Factor No. | | | Schedule 3F GP Charging Stations | Schedule 4 Large Power |
|---|---|---|---|---|---|
| 41 | 71 | 5819_DISCBIL | Accts 581-589 - Distribution-Customer-Billing & Collections | - | - |
| 42 | 72 | 5819_DISCINF | Accts 581-589 - Distribution-Customer-Service & Info | - | - |
| 43 | 73 | 5819_DISCOTH | Accts 581-589 - Distribution-Customer-Other | 1 | 112 |
| 44 | 74 | 5918_PROD | Accts 591-598 - Production-Demand | - | - |
| 45 | 75 | 5918_PROEF | Accts 591-598 - Production-Energy-Fuel | - | - |
| 46 | 76 | 5918_PROENF | Accts 591-598 - Production-Energy-Non-Fuel | - | - |
| 47 | 77 | 5918_STO_PRO_D | Accts 591-598 - Storage-Production-Demand | - | - |
| 48 | 78 | 5918_STO_TRA_D | Accts 591-598 - Storage-Transmission-Demand | - | - |
| 49 | 79 | 5918_STO_DIS_DSUB | Accts 591-598 - Storage-Distribution-Demand-Subs | - | - |
| 50 | 80 | 5918_STO_DIS_DPRI | Accts 591-598 - Storage-Distribution-Demand-Primary | - | - |
| 51 | 81 | 5918_STO_DIS_DSEC | Accts 591-598 - Storage-Distribution-Demand-Secondary | - | - |
| 52 | 82 | 5918_TRAD | Accts 591-598 - Transmission-Demand | - | - |
| 53 | 83 | 5918_DISDSUB | Accts 591-598 - Distribution-Demand-Subs | 4,313 | 168,788 |
| 54 | 84 | 5918_DISDPRI | Accts 591-598 - Distribution-Demand-Primary | 16,645 | 651,470 |
| 55 | 85 | 5918_DISDSEC | Accts 591-598 - Distribution-Demand-Secondary | 8,604 | - |
| 56 | 86 | 5918_DISCSRV | Accts 591-598 - Distribution-Customer-Services | - | - |
| 57 | 87 | 5918_DISCMTR | Accts 591-598 - Distribution-Customer-Meters | 393 | 22,944 |
| 58 | 88 | 5918_DISCMTRR | Accts 591-598 - Distribution-Customer-Meter Reading | - | - |
| 59 | 89 | 5918_DISCBIL | Accts 591-598 - Distribution-Customer-Billing & Collections | - | - |
| 60 | 90 | 5918_DISCINF | Accts 591-598 - Distribution-Customer-Service & Info | - | - |
| 61 | 91 | 5918_DISCOTH | Accts 591-598 - Distribution-Customer-Other | 0 | 4 |
| 62 | 92 | CACT_DISCMTRR | Cust Accts - Distribution-Customer-Meter Reading | 245 | 2,682 |
| 63 | 93 | CACT_DISCBIL | Cust Accts - Distribution-Customer-Billing & Collections | 335 | 3,666 |
| 64 | 94 | CACT_DISCINF | Cust Accts - Distribution-Customer-Service & Info | - | - |
| 65 | 95 | CACT_DISCOTH | Cust Accts - Distribution-Customer-Other | (43) | (4,753) |
| 66 | 96 | LA_PROD | Labor - Production-Demand | 8,184 | 969,598 |
| 67 | 97 | LA_PROEF | Labor - Production-Energy-Fuel | - | - |
| 68 | 98 | LA_PROENF | Labor - Production-Energy-Non-Fuel | - | - |
| 69 | 99 | LA_STO_PRO_D | Labor - Storage-Production-Demand | - | - |
| 70 | 100 | LA_STO_TRA_D | Labor - Storage-Transmission-Demand | - | - |
| 71 | 101 | LA_STO_DIS_DSUB | Labor - Storage-Distribution-Demand-Subs | - | - |
| 72 | 102 | LA_STO_DIS_DPRI | Labor - Storage-Distribution-Demand-Primary | - | - |
| 73 | 103 | LA_STO_DIS_DSEC | Labor - Storage-Distribution-Demand-Secondary | - | - |
| 74 | 104 | LA_TRAD | Labor - Transmission-Demand | 2,029 | 275,762 |
| 75 | 105 | LA_DISDSUB | Labor - Distribution-Demand-Subs | 5,707 | 223,365 |
| 76 | 106 | LA_DISDPRI | Labor - Distribution-Demand-Primary | 15,121 | 591,795 |
| 77 | 107 | LA_DISDSEC | Labor - Distribution-Demand-Secondary | 7,815 | - |
| 78 | 108 | LA_DISCSRV | Labor - Distribution-Customer-Services | - | - |
| 1 | 109 | LA_DISCMTR | Labor - Distribution-Customer-Meters | 1,852 | 108,105 |

This schedule is sponsored by PNM Witness Larkin

**PUBLIC SERVICE OF NEW MEXICO**
**Base Period Ending June 30th, 2026**

| Class_Factors Line No. | Factor No. | | | Schedule 5 Industrial Power | Schedule 10 Irrigation |
|---|---|---|---|---|---|
| 41 | 71 | 5819_DISCBIL | Accts 581-589 - Distribution-Customer-Billing & Collections | - | - |
| 42 | 72 | 5819_DISCINF | Accts 581-589 - Distribution-Customer-Service & Info | - | - |
| 43 | 73 | 5819_DISCOTH | Accts 581-589 - Distribution-Customer-Other | 2 | 6 |
| 44 | 74 | 5918_PROD | Accts 591-598 - Production-Demand | - | - |
| 45 | 75 | 5918_PROEF | Accts 591-598 - Production-Energy-Fuel | - | - |
| 46 | 76 | 5918_PROENF | Accts 591-598 - Production-Energy-Non-Fuel | - | - |
| 47 | 77 | 5918_STO_PRO_D | Accts 591-598 - Storage-Production-Demand | - | - |
| 48 | 78 | 5918_STO_TRA_D | Accts 591-598 - Storage-Transmission-Demand | - | - |
| 49 | 79 | 5918_STO_DIS_DSUB | Accts 591-598 - Storage-Distribution-Demand-Subs | - | - |
| 50 | 80 | 5918_STO_DIS_DPRI | Accts 591-598 - Storage-Distribution-Demand-Primary | - | - |
| 51 | 81 | 5918_STO_DIS_DSEC | Accts 591-598 - Storage-Distribution-Demand-Secondary | - | - |
| 52 | 82 | 5918_TRAD | Accts 591-598 - Transmission-Demand | - | - |
| 53 | 83 | 5918_DISDSUB | Accts 591-598 - Distribution-Demand-Subs | - | 7,753 |
| 54 | 84 | 5918_DISDPRI | Accts 591-598 - Distribution-Demand-Primary | - | 29,924 |
| 55 | 85 | 5918_DISDSEC | Accts 591-598 - Distribution-Demand-Secondary | - | 15,467 |
| 56 | 86 | 5918_DISCSRV | Accts 591-598 - Distribution-Customer-Services | - | - |
| 57 | 87 | 5918_DISCMTR | Accts 591-598 - Distribution-Customer-Meters | 131 | 7,761 |
| 58 | 88 | 5918_DISCMTRR | Accts 591-598 - Distribution-Customer-Meter Reading | - | - |
| 59 | 89 | 5918_DISCBIL | Accts 591-598 - Distribution-Customer-Billing & Collections | - | - |
| 60 | 90 | 5918_DISCINF | Accts 591-598 - Distribution-Customer-Service & Info | - | - |
| 61 | 91 | 5918_DISCOTH | Accts 591-598 - Distribution-Customer-Other | 0 | 0 |
| 62 | 92 | CACT_DISCMTRR | Cust Accts - Distribution-Customer-Meter Reading | 15 | 4,844 |
| 63 | 93 | CACT_DISCBIL | Cust Accts - Distribution-Customer-Billing & Collections | 21 | 6,620 |
| 64 | 94 | CACT_DISCINF | Cust Accts - Distribution-Customer-Service & Info | - | - |
| 65 | 95 | CACT_DISCOTH | Cust Accts - Distribution-Customer-Other | (66) | (236) |
| 66 | 96 | LA_PROD | Labor - Production-Demand | 20,313 | 27,634 |
| 67 | 97 | LA_PROEF | Labor - Production-Energy-Fuel | - | - |
| 68 | 98 | LA_PROENF | Labor - Production-Energy-Non-Fuel | - | - |
| 69 | 99 | LA_STO_PRO_D | Labor - Storage-Production-Demand | - | - |
| 70 | 100 | LA_STO_TRA_D | Labor - Storage-Transmission-Demand | - | - |
| 71 | 101 | LA_STO_DIS_DSUB | Labor - Storage-Distribution-Demand-Subs | - | - |
| 72 | 102 | LA_STO_DIS_DPRI | Labor - Storage-Distribution-Demand-Primary | - | - |
| 73 | 103 | LA_STO_DIS_DSEC | Labor - Storage-Distribution-Demand-Secondary | - | - |
| 74 | 104 | LA_TRAD | Labor - Transmission-Demand | 5,777 | 7,540 |
| 75 | 105 | LA_DISDSUB | Labor - Distribution-Demand-Subs | - | 10,260 |
| 76 | 106 | LA_DISDPRI | Labor - Distribution-Demand-Primary | - | 27,183 |
| 77 | 107 | LA_DISDSEC | Labor - Distribution-Demand-Secondary | - | 14,050 |
| 78 | 108 | LA_DISCSRV | Labor - Distribution-Customer-Services | - | - |
| 1 | 109 | LA_DISCMTR | Labor - Distribution-Customer-Meters | 618 | 36,569 |

This schedule is sponsored by PNM Witness Larkin

**PUBLIC SERVICE OF NEW MEXICO**
**Base Period Ending June 30th, 2026**

| Class_Factors Line No. | Factor No. | | | Schedule 11 Water & Sewage | Schedule 15 Industrial Power |
|---|---|---|---|---|---|
| 41 | 71 | 5819_DISCBIL | Accts 581-589 - Distribution-Customer-Billing & Collections | - | - |
| 42 | 72 | 5819_DISCINF | Accts 581-589 - Distribution-Customer-Service & Info | - | - |
| 43 | 73 | 5819_DISCOTH | Accts 581-589 - Distribution-Customer-Other | 24 | 8.99 |
| 44 | 74 | 5918_PROD | Accts 591-598 - Production-Demand | - | - |
| 45 | 75 | 5918_PROEF | Accts 591-598 - Production-Energy-Fuel | - | - |
| 46 | 76 | 5918_PROENF | Accts 591-598 - Production-Energy-Non-Fuel | - | - |
| 47 | 77 | 5918_STO_PRO_D | Accts 591-598 - Storage-Production-Demand | - | - |
| 48 | 78 | 5918_STO_TRA_D | Accts 591-598 - Storage-Transmission-Demand | - | - |
| 49 | 79 | 5918_STO_DIS_DSUB | Accts 591-598 - Storage-Distribution-Demand-Subs | - | - |
| 50 | 80 | 5918_STO_DIS_DPRI | Accts 591-598 - Storage-Distribution-Demand-Primary | - | - |
| 51 | 81 | 5918_STO_DIS_DSEC | Accts 591-598 - Storage-Distribution-Demand-Secondary | - | - |
| 52 | 82 | 5918_TRAD | Accts 591-598 - Transmission-Demand | - | - |
| 53 | 83 | 5918_DISDSUB | Accts 591-598 - Distribution-Demand-Subs | 56,511 | - |
| 54 | 84 | 5918_DISDPRI | Accts 591-598 - Distribution-Demand-Primary | 218,117 | - |
| 55 | 85 | 5918_DISDSEC | Accts 591-598 - Distribution-Demand-Secondary | - | - |
| 56 | 86 | 5918_DISCSRV | Accts 591-598 - Distribution-Customer-Services | - | - |
| 57 | 87 | 5918_DISCMTR | Accts 591-598 - Distribution-Customer-Meters | 21,108 | 524.43 |
| 58 | 88 | 5918_DISCMTRR | Accts 591-598 - Distribution-Customer-Meter Reading | - | - |
| 59 | 89 | 5918_DISCBIL | Accts 591-598 - Distribution-Customer-Billing & Collections | - | - |
| 60 | 90 | 5918_DISCINF | Accts 591-598 - Distribution-Customer-Service & Info | - | - |
| 61 | 91 | 5918_DISCOTH | Accts 591-598 - Distribution-Customer-Other | 1 | 0.30 |
| 62 | 92 | CACT_DISCMTRR | Cust Accts - Distribution-Customer-Meter Reading | 2,468 | 61.31 |
| 63 | 93 | CACT_DISCBIL | Cust Accts - Distribution-Customer-Billing & Collections | 3,373 | 83.80 |
| 64 | 94 | CACT_DISCINF | Cust Accts - Distribution-Customer-Service & Info | - | - |
| 65 | 95 | CACT_DISCOTH | Cust Accts - Distribution-Customer-Other | (1,011) | (380.89) |
| 66 | 96 | LA_PROD | Labor - Production-Demand | 100,577 | 71,763.30 |
| 67 | 97 | LA_PROEF | Labor - Production-Energy-Fuel | - | - |
| 68 | 98 | LA_PROENF | Labor - Production-Energy-Non-Fuel | - | - |
| 69 | 99 | LA_STO_PRO_D | Labor - Storage-Production-Demand | - | - |
| 70 | 100 | LA_STO_TRA_D | Labor - Storage-Transmission-Demand | - | - |
| 71 | 101 | LA_STO_DIS_DSUB | Labor - Storage-Distribution-Demand-Subs | - | - |
| 72 | 102 | LA_STO_DIS_DPRI | Labor - Storage-Distribution-Demand-Primary | - | - |
| 73 | 103 | LA_STO_DIS_DSEC | Labor - Storage-Distribution-Demand-Secondary | - | - |
| 74 | 104 | LA_TRAD | Labor - Transmission-Demand | 34,736 | 20,363.05 |
| 75 | 105 | LA_DISDSUB | Labor - Distribution-Demand-Subs | 74,784 | - |
| 76 | 106 | LA_DISDPRI | Labor - Distribution-Demand-Primary | 198,137 | - |
| 77 | 107 | LA_DISDSEC | Labor - Distribution-Demand-Secondary | - | - |
| 78 | 108 | LA_DISCSRV | Labor - Distribution-Customer-Services | - | - |
| 1 | 109 | LA_DISCMTR | Labor - Distribution-Customer-Meters | 99,457 | 2,470.98 |

This schedule is sponsored by PNM Witness Larkin

**PUBLIC SERVICE OF NEW MEXICO**
**Base Period Ending June 30th, 2026**

| Class_Factors Line No. | Factor No. | | | Schedule 30 Industrial Power | Schedule 33B Large Service |
|---|---|---|---|---|---|
| 41 | 71 | 5819_DISCBIL | Accts 581-589 - Distribution-Customer-Billing & Collections | - | - |
| 42 | 72 | 5819_DISCINF | Accts 581-589 - Distribution-Customer-Service & Info | - | - |
| 43 | 73 | 5819_DISCOTH | Accts 581-589 - Distribution-Customer-Other | 82 | 0 |
| 44 | 74 | 5918_PROD | Accts 591-598 - Production-Demand | - | - |
| 45 | 75 | 5918_PROEF | Accts 591-598 - Production-Energy-Fuel | - | - |
| 46 | 76 | 5918_PROENF | Accts 591-598 - Production-Energy-Non-Fuel | - | - |
| 47 | 77 | 5918_STO_PRO_D | Accts 591-598 - Storage-Production-Demand | - | - |
| 48 | 78 | 5918_STO_TRA_D | Accts 591-598 - Storage-Transmission-Demand | - | - |
| 49 | 79 | 5918_STO_DIS_DSUB | Accts 591-598 - Storage-Distribution-Demand-Subs | - | - |
| 50 | 80 | 5918_STO_DIS_DPRI | Accts 591-598 - Storage-Distribution-Demand-Primary | - | - |
| 51 | 81 | 5918_STO_DIS_DSEC | Accts 591-598 - Storage-Distribution-Demand-Secondary | - | - |
| 52 | 82 | 5918_TRAD | Accts 591-598 - Transmission-Demand | - | - |
| 53 | 83 | 5918_DISDSUB | Accts 591-598 - Distribution-Demand-Subs | 94,999 | - |
| 54 | 84 | 5918_DISDPRI | Accts 591-598 - Distribution-Demand-Primary | - | - |
| 55 | 85 | 5918_DISDSEC | Accts 591-598 - Distribution-Demand-Secondary | - | - |
| 56 | 86 | 5918_DISCSRV | Accts 591-598 - Distribution-Customer-Services | - | - |
| 57 | 87 | 5918_DISCMTR | Accts 591-598 - Distribution-Customer-Meters | 1,835 | 262 |
| 58 | 88 | 5918_DISCMTRR | Accts 591-598 - Distribution-Customer-Meter Reading | - | - |
| 59 | 89 | 5918_DISCBIL | Accts 591-598 - Distribution-Customer-Billing & Collections | - | - |
| 60 | 90 | 5918_DISCINF | Accts 591-598 - Distribution-Customer-Service & Info | - | - |
| 61 | 91 | 5918_DISCOTH | Accts 591-598 - Distribution-Customer-Other | 3 | 0 |
| 62 | 92 | CACT_DISCMTRR | Cust Accts - Distribution-Customer-Meter Reading | 215 | 31 |
| 63 | 93 | CACT_DISCBIL | Cust Accts - Distribution-Customer-Billing & Collections | 293 | 42 |
| 64 | 94 | CACT_DISCINF | Cust Accts - Distribution-Customer-Service & Info | - | - |
| 65 | 95 | CACT_DISCOTH | Cust Accts - Distribution-Customer-Other | (3,493) | (18) |
| 66 | 96 | LA_PROD | Labor - Production-Demand | 593,764 | 8,065 |
| 67 | 97 | LA_PROEF | Labor - Production-Energy-Fuel | - | - |
| 68 | 98 | LA_PROENF | Labor - Production-Energy-Non-Fuel | - | - |
| 69 | 99 | LA_STO_PRO_D | Labor - Storage-Production-Demand | - | - |
| 70 | 100 | LA_STO_TRA_D | Labor - Storage-Transmission-Demand | - | - |
| 71 | 101 | LA_STO_DIS_DSUB | Labor - Storage-Distribution-Demand-Subs | - | - |
| 72 | 102 | LA_STO_DIS_DPRI | Labor - Storage-Distribution-Demand-Primary | - | - |
| 73 | 103 | LA_STO_DIS_DSEC | Labor - Storage-Distribution-Demand-Secondary | - | - |
| 74 | 104 | LA_TRAD | Labor - Transmission-Demand | 168,144 | 2,422 |
| 75 | 105 | LA_DISDSUB | Labor - Distribution-Demand-Subs | 125,716 | - |
| 76 | 106 | LA_DISDPRI | Labor - Distribution-Demand-Primary | - | - |
| 77 | 107 | LA_DISDSEC | Labor - Distribution-Demand-Secondary | - | - |
| 78 | 108 | LA_DISCSRV | Labor - Distribution-Customer-Services | - | - |
| 1 | 109 | LA_DISCMTR | Labor - Distribution-Customer-Meters | 8,648 | 1,235 |

This schedule is sponsored by PNM Witness Larkin

**PUBLIC SERVICE OF NEW MEXICO**
**Base Period Ending June 30th, 2026**

| Class_Factors Line No. | Factor No. | | | Schedule 35B Lg Power Service | Schedule 36B Special Service Rate |
|---|---|---|---|---|---|
| 41 | 71 | 5819_DISCBIL | Accts 581-589 - Distribution-Customer-Billing & Collections | - | - |
| 42 | 72 | 5819_DISCINF | Accts 581-589 - Distribution-Customer-Service & Info | - | - |
| 43 | 73 | 5819_DISCOTH | Accts 581-589 - Distribution-Customer-Other | 20 | 57 |
| 44 | 74 | 5918_PROD | Accts 591-598 - Production-Demand | - | - |
| 45 | 75 | 5918_PROEF | Accts 591-598 - Production-Energy-Fuel | - | - |
| 46 | 76 | 5918_PROENF | Accts 591-598 - Production-Energy-Non-Fuel | - | - |
| 47 | 77 | 5918_STO_PRO_D | Accts 591-598 - Storage-Production-Demand | - | - |
| 48 | 78 | 5918_STO_TRA_D | Accts 591-598 - Storage-Transmission-Demand | - | - |
| 49 | 79 | 5918_STO_DIS_DSUB | Accts 591-598 - Storage-Distribution-Demand-Subs | - | - |
| 50 | 80 | 5918_STO_DIS_DPRI | Accts 591-598 - Storage-Distribution-Demand-Primary | - | - |
| 51 | 81 | 5918_STO_DIS_DSEC | Accts 591-598 - Storage-Distribution-Demand-Secondary | - | - |
| 52 | 82 | 5918_TRAD | Accts 591-598 - Transmission-Demand | - | - |
| 53 | 83 | 5918_DISDSUB | Accts 591-598 - Distribution-Demand-Subs | 29,325 | - |
| 54 | 84 | 5918_DISDPRI | Accts 591-598 - Distribution-Demand-Primary | - | - |
| 55 | 85 | 5918_DISDSEC | Accts 591-598 - Distribution-Demand-Secondary | - | - |
| 56 | 86 | 5918_DISCSRV | Accts 591-598 - Distribution-Customer-Services | - | - |
| 57 | 87 | 5918_DISCMTR | Accts 591-598 - Distribution-Customer-Meters | 918 | 1,049 |
| 58 | 88 | 5918_DISCMTRR | Accts 591-598 - Distribution-Customer-Meter Reading | - | - |
| 59 | 89 | 5918_DISCBIL | Accts 591-598 - Distribution-Customer-Billing & Collections | - | - |
| 60 | 90 | 5918_DISCINF | Accts 591-598 - Distribution-Customer-Service & Info | - | - |
| 61 | 91 | 5918_DISCOTH | Accts 591-598 - Distribution-Customer-Other | 1 | 2 |
| 62 | 92 | CACT_DISCMTRR | Cust Accts - Distribution-Customer-Meter Reading | 107 | 123 |
| 63 | 93 | CACT_DISCBIL | Cust Accts - Distribution-Customer-Billing & Collections | 147 | 168 |
| 64 | 94 | CACT_DISCINF | Cust Accts - Distribution-Customer-Service & Info | - | - |
| 65 | 95 | CACT_DISCOTH | Cust Accts - Distribution-Customer-Other | (866) | (2,432) |
| 66 | 96 | LA_PROD | Labor - Production-Demand | 164,508 | - |
| 67 | 97 | LA_PROEF | Labor - Production-Energy-Fuel | - | - |
| 68 | 98 | LA_PROENF | Labor - Production-Energy-Non-Fuel | - | - |
| 69 | 99 | LA_STO_PRO_D | Labor - Storage-Production-Demand | - | - |
| 70 | 100 | LA_STO_TRA_D | Labor - Storage-Transmission-Demand | - | - |
| 71 | 101 | LA_STO_DIS_DSUB | Labor - Storage-Distribution-Demand-Subs | - | - |
| 72 | 102 | LA_STO_DIS_DPRI | Labor - Storage-Distribution-Demand-Primary | - | - |
| 73 | 103 | LA_STO_DIS_DSEC | Labor - Storage-Distribution-Demand-Secondary | - | - |
| 74 | 104 | LA_TRAD | Labor - Transmission-Demand | 44,883 | 468,831 |
| 75 | 105 | LA_DISDSUB | Labor - Distribution-Demand-Subs | 38,807 | - |
| 76 | 106 | LA_DISDPRI | Labor - Distribution-Demand-Primary | - | - |
| 77 | 107 | LA_DISDSEC | Labor - Distribution-Demand-Secondary | - | - |
| 78 | 108 | LA_DISCSRV | Labor - Distribution-Customer-Services | - | - |
| 1 | 109 | LA_DISCMTR | Labor - Distribution-Customer-Meters | 4,324 | 4,942 |

This schedule is sponsored by PNM Witness Larkin

**PUBLIC SERVICE OF NEW MEXICO**
**Base Period Ending June 30th, 2026**

| Line No. | Class_Factors Factor No. | | | Schedule 6 Priv. Area Light | Schedule 20 Streetlighting |
|---|---|---|---|---|---|
| 41 | 71 | 5819_DISCBIL | Accts 581-589 - Distribution-Customer-Billing & Collections | - | - |
| 42 | 72 | 5819_DISCINF | Accts 581-589 - Distribution-Customer-Service & Info | - | - |
| 43 | 73 | 5819_DISCOTH | Accts 581-589 - Distribution-Customer-Other | 185 | 4,936 |
| 44 | 74 | 5918_PROD | Accts 591-598 - Production-Demand | - | - |
| 45 | 75 | 5918_PROEF | Accts 591-598 - Production-Energy-Fuel | - | - |
| 46 | 76 | 5918_PROENF | Accts 591-598 - Production-Energy-Non-Fuel | - | - |
| 47 | 77 | 5918_STO_PRO_D | Accts 591-598 - Storage-Production-Demand | - | - |
| 48 | 78 | 5918_STO_TRA_D | Accts 591-598 - Storage-Transmission-Demand | - | - |
| 49 | 79 | 5918_STO_DIS_DSUB | Accts 591-598 - Storage-Distribution-Demand-Subs | - | - |
| 50 | 80 | 5918_STO_DIS_DPRI | Accts 591-598 - Storage-Distribution-Demand-Primary | - | - |
| 51 | 81 | 5918_STO_DIS_DSEC | Accts 591-598 - Storage-Distribution-Demand-Secondary | - | - |
| 52 | 82 | 5918_TRAD | Accts 591-598 - Transmission-Demand | - | - |
| 53 | 83 | 5918_DISDSUB | Accts 591-598 - Distribution-Demand-Subs | 4,535 | 15,519 |
| 54 | 84 | 5918_DISDPRI | Accts 591-598 - Distribution-Demand-Primary | 17,502 | 59,899 |
| 55 | 85 | 5918_DISDSEC | Accts 591-598 - Distribution-Demand-Secondary | 9,047 | 30,960 |
| 56 | 86 | 5918_DISCSRV | Accts 591-598 - Distribution-Customer-Services | - | - |
| 57 | 87 | 5918_DISCMTR | Accts 591-598 - Distribution-Customer-Meters | - | - |
| 58 | 88 | 5918_DISCMTRR | Accts 591-598 - Distribution-Customer-Meter Reading | - | - |
| 59 | 89 | 5918_DISCBIL | Accts 591-598 - Distribution-Customer-Billing & Collections | - | - |
| 60 | 90 | 5918_DISCINF | Accts 591-598 - Distribution-Customer-Service & Info | - | - |
| 61 | 91 | 5918_DISCOTH | Accts 591-598 - Distribution-Customer-Other | 6 | 167 |
| 62 | 92 | CACT_DISCMTRR | Cust Accts - Distribution-Customer-Meter Reading | - | - |
| 63 | 93 | CACT_DISCBIL | Cust Accts - Distribution-Customer-Billing & Collections | - | - |
| 64 | 94 | CACT_DISCINF | Cust Accts - Distribution-Customer-Service & Info | - | - |
| 65 | 95 | CACT_DISCOTH | Cust Accts - Distribution-Customer-Other | (64) | (173) |
| 66 | 96 | LA_PROD | Labor - Production-Demand | 4,352 | 11,795 |
| 67 | 97 | LA_PROEF | Labor - Production-Energy-Fuel | - | - |
| 68 | 98 | LA_PROENF | Labor - Production-Energy-Non-Fuel | - | - |
| 69 | 99 | LA_STO_PRO_D | Labor - Storage-Production-Demand | - | - |
| 70 | 100 | LA_STO_TRA_D | Labor - Storage-Transmission-Demand | - | - |
| 71 | 101 | LA_STO_DIS_DSUB | Labor - Storage-Distribution-Demand-Subs | - | - |
| 72 | 102 | LA_STO_DIS_DPRI | Labor - Storage-Distribution-Demand-Primary | - | - |
| 73 | 103 | LA_STO_DIS_DSEC | Labor - Storage-Distribution-Demand-Secondary | - | - |
| 74 | 104 | LA_TRAD | Labor - Transmission-Demand | 3,294 | 8,684 |
| 75 | 105 | LA_DISDSUB | Labor - Distribution-Demand-Subs | 6,001 | 20,537 |
| 76 | 106 | LA_DISDPRI | Labor - Distribution-Demand-Primary | 15,899 | 54,412 |
| 77 | 107 | LA_DISDSEC | Labor - Distribution-Demand-Secondary | 8,218 | 28,124 |
| 78 | 108 | LA_DISCSRV | Labor - Distribution-Customer-Services | - | - |
| 1 | 109 | LA_DISCMTR | Labor - Distribution-Customer-Meters | - | - |

This schedule is sponsored by PNM Witness Larkin

**PUBLIC SERVICE OF NEW MEXICO**
**Base Period Ending June 30th, 2026**

| Line No. | Class_Factors Factor No. | | | dule 20-Customer O Streetlighting |
|---|---|---|---|---|
| 41 | 71 | 5819_DISCBIL | Accts 581-589 - Distribution-Customer-Billing & Collections | - |
| 42 | 72 | 5819_DISCINF | Accts 581-589 - Distribution-Customer-Service & Info | - |
| 43 | 73 | 5819_DISCOTH | Accts 581-589 - Distribution-Customer-Other | 0 |
| 44 | 74 | 5918_PROD | Accts 591-598 - Production-Demand | - |
| 45 | 75 | 5918_PROEF | Accts 591-598 - Production-Energy-Fuel | - |
| 46 | 76 | 5918_PROENF | Accts 591-598 - Production-Energy-Non-Fuel | - |
| 47 | 77 | 5918_STO_PRO_D | Accts 591-598 - Storage-Production-Demand | - |
| 48 | 78 | 5918_STO_TRA_D | Accts 591-598 - Storage-Transmission-Demand | - |
| 49 | 79 | 5918_STO_DIS_DSUB | Accts 591-598 - Storage-Distribution-Demand-Subs | - |
| 50 | 80 | 5918_STO_DIS_DPRI | Accts 591-598 - Storage-Distribution-Demand-Primary | - |
| 51 | 81 | 5918_STO_DIS_DSEC | Accts 591-598 - Storage-Distribution-Demand-Secondary | - |
| 52 | 82 | 5918_TRAD | Accts 591-598 - Transmission-Demand | - |
| 53 | 83 | 5918_DISDSUB | Accts 591-598 - Distribution-Demand-Subs | 0 |
| 54 | 84 | 5918_DISDPRI | Accts 591-598 - Distribution-Demand-Primary | 0 |
| 55 | 85 | 5918_DISDSEC | Accts 591-598 - Distribution-Demand-Secondary | 0 |
| 56 | 86 | 5918_DISCSRV | Accts 591-598 - Distribution-Customer-Services | - |
| 57 | 87 | 5918_DISCMTR | Accts 591-598 - Distribution-Customer-Meters | - |
| 58 | 88 | 5918_DISCMTRR | Accts 591-598 - Distribution-Customer-Meter Reading | - |
| 59 | 89 | 5918_DISCBIL | Accts 591-598 - Distribution-Customer-Billing & Collections | - |
| 60 | 90 | 5918_DISCINF | Accts 591-598 - Distribution-Customer-Service & Info | - |
| 61 | 91 | 5918_DISCOTH | Accts 591-598 - Distribution-Customer-Other | 0 |
| 62 | 92 | CACT_DISCMTRR | Cust Accts - Distribution-Customer-Meter Reading | - |
| 63 | 93 | CACT_DISCBIL | Cust Accts - Distribution-Customer-Billing & Collections | - |
| 64 | 94 | CACT_DISCINF | Cust Accts - Distribution-Customer-Service & Info | - |
| 65 | 95 | CACT_DISCOTH | Cust Accts - Distribution-Customer-Other | - |
| 66 | 96 | LA_PROD | Labor - Production-Demand | 0 |
| 67 | 97 | LA_PROEF | Labor - Production-Energy-Fuel | - |
| 68 | 98 | LA_PROENF | Labor - Production-Energy-Non-Fuel | - |
| 69 | 99 | LA_STO_PRO_D | Labor - Storage-Production-Demand | - |
| 70 | 100 | LA_STO_TRA_D | Labor - Storage-Transmission-Demand | - |
| 71 | 101 | LA_STO_DIS_DSUB | Labor - Storage-Distribution-Demand-Subs | - |
| 72 | 102 | LA_STO_DIS_DPRI | Labor - Storage-Distribution-Demand-Primary | - |
| 73 | 103 | LA_STO_DIS_DSEC | Labor - Storage-Distribution-Demand-Secondary | - |
| 74 | 104 | LA_TRAD | Labor - Transmission-Demand | 0 |
| 75 | 105 | LA_DISDSUB | Labor - Distribution-Demand-Subs | 0 |
| 76 | 106 | LA_DISDPRI | Labor - Distribution-Demand-Primary | 0 |
| 77 | 107 | LA_DISDSEC | Labor - Distribution-Demand-Secondary | 0 |
| 78 | 108 | LA_DISCSRV | Labor - Distribution-Customer-Services | - |
| 1 | 109 | LA_DISCMTR | Labor - Distribution-Customer-Meters | - |

This schedule is sponsored by PNM Witness Larkin

**PUBLIC SERVICE OF NEW MEXICO**
**Base Period Ending June 30th, 2026**

Class_Factors

| Line No. | Factor No. | | | Other Input |
|---|---|---|---|---|
| 2 | 110 | LA_DISCMTRR | Labor - Distribution-Customer-Meter Reading | |
| 3 | 111 | LA_DISCBIL | Labor - Distribution-Customer-Billing & Collections | |
| 4 | 112 | LA_DISCINF | Labor - Distribution-Customer-Service & Info | |
| 5 | 113 | LA_DISCOTH | Labor - Distribution-Customer-Other | |
| 6 | 168 | RBASE_PROD | RBASE - Production-Demand | |
| 7 | 169 | RBASE_PROEF | RBASE - Production-Energy-Fuel | |
| 8 | 170 | RBASE_PROENF | RBASE - Production-Energy-Non-Fuel | |
| 9 | 171 | RBASE_STO_PRO_D | RBASE - Storage-Production-Demand | |
| 10 | 172 | RBASE_STO_TRA_D | RBASE - Storage-Transmission-Demand | |
| 11 | 173 | RBASE_STO_DIS_DSUB | RBASE - Storage-Distribution-Demand-Subs | |
| 12 | 174 | RBASE_STO_DIS_DPRI | RBASE - Storage-Distribution-Demand-Primary | |
| 13 | 175 | RBASE_STO_DIS_DSEC | RBASE - Storage-Distribution-Demand-Secondary | |
| 14 | 176 | RBASE_TRAD | RBASE - Transmission-Demand | |
| 15 | 177 | RBASE_DISDSUB | RBASE - Distribution-Demand-Subs | |
| 16 | 178 | RBASE_DISDPRI | RBASE - Distribution-Demand-Primary | |
| 17 | 179 | RBASE_DISDSEC | RBASE - Distribution-Demand-Secondary | |
| 18 | 180 | RBASE_DISCSRV | RBASE - Distribution-Customer-Services | |
| 19 | 181 | RBASE_DISCMTR | RBASE - Distribution-Customer-Meters | |
| 20 | 182 | RBASE_DISCMTRR | RBASE - Distribution-Customer-Meter Reading | |
| 21 | 183 | RBASE_DISCBIL | RBASE - Distribution-Customer-Billing & Collections | |
| 22 | 184 | RBASE_DISCINF | RBASE - Distribution-Customer-Service & Info | |
| 23 | 185 | RBASE_DISCOTH | RBASE - Distribution-Customer-Other | |
| 24 | 186 | | | |
| 25 | 187 | | | |
| 26 | 188 | TOTAL_O&M_PROD | Total O&M Expense - Production-Demand | |
| 27 | 189 | TOTAL_O&M_PROEF | Total O&M Expense - Production-Energy-Fuel | |
| 28 | 190 | TOTAL_O&M_PROENF | Total O&M Expense - Production-Energy-Non-Fuel | |
| 29 | 191 | TOTAL_O&M_STO_PRO_D | Total O&M Expense - Storage-Production-Demand | |
| 30 | 192 | TOTAL_O&M_STO_TRA_D | Total O&M Expense - Storage-Transmission-Demand | |
| 31 | 193 | TOTAL_O&M_STO_DIS_DSUB | Total O&M Expense - Storage-Distribution-Demand-Subs | |
| 32 | 194 | TOTAL_O&M_STO_DIS_DPRI | Total O&M Expense - Storage-Distribution-Demand-Primary | |
| 33 | 195 | TOTAL_O&M_STO_DIS_DSEC | Total O&M Expense - Storage-Distribution-Demand-Secondary | |
| 34 | 196 | TOTAL_O&M_TRAD | Total O&M Expense - Transmission-Demand | |
| 35 | 197 | TOTAL_O&M_DISDSUB | Total O&M Expense - Distribution-Demand-Subs | |
| 36 | 198 | TOTAL_O&M_DISDPRI | Total O&M Expense - Distribution-Demand-Primary | |
| 37 | 199 | TOTAL_O&M_DISDSEC | Total O&M Expense - Distribution-Demand-Secondary | |
| 38 | 200 | TOTAL_O&M_DISCSRV | Total O&M Expense - Distribution-Customer-Services | |
| 39 | 201 | TOTAL_O&M_DISCMTR | Total O&M Expense - Distribution-Customer-Meters | |
| 40 | 202 | TOTAL_O&M_DISCMTRR | Total O&M Expense - Distribution-Customer-Meter Reading | |

**PUBLIC SERVICE OF NEW MEXICO**
**Base Period Ending June 30th, 2026**

| Class_Factors | | | | | Schedule 1 |
|---|---|---|---|---|---|
| Line No. | Factor No. | | | PNM Retail | Residential |
| 2 | 110 | LA_DISCMTRR | Labor - Distribution-Customer-Meter Reading | 5,063,675 | 4,528,143 |
| 3 | 111 | LA_DISCBIL | Labor - Distribution-Customer-Billing & Collections | 6,921,261 | 6,189,272 |
| 4 | 112 | LA_DISCINF | Labor - Distribution-Customer-Service & Info | - | - |
| 5 | 113 | LA_DISCOTH | Labor - Distribution-Customer-Other | 5,553,619 | 4,292,697 |
| 6 | 168 | RBASE_PROD | RBASE - Production-Demand | 895,184,845 | 451,110,313 |
| 7 | 169 | RBASE_PROEF | RBASE - Production-Energy-Fuel | - | - |
| 8 | 170 | RBASE_PROENF | RBASE - Production-Energy-Non-Fuel | 85,937,758 | 33,144,737 |
| 9 | 171 | RBASE_STO_PRO_D | RBASE - Storage-Production-Demand | 68,185,368 | 34,360,638 |
| 10 | 172 | RBASE_STO_TRA_D | RBASE - Storage-Transmission-Demand | 55,119,428 | 23,812,227 |
| 11 | 173 | RBASE_STO_DIS_DSUB | RBASE - Storage-Distribution-Demand-Subs | 1,914,581 | 980,351 |
| 12 | 174 | RBASE_STO_DIS_DPRI | RBASE - Storage-Distribution-Demand-Primary | 4,839,724 | 2,609,246 |
| 13 | 175 | RBASE_STO_DIS_DSEC | RBASE - Storage-Distribution-Demand-Secondary | - | - |
| 14 | 176 | RBASE_TRAD | RBASE - Transmission-Demand | 591,593,032 | 255,574,995 |
| 15 | 177 | RBASE_DISDSUB | RBASE - Distribution-Demand-Subs | 304,555,993 | 155,946,235 |
| 16 | 178 | RBASE_DISDPRI | RBASE - Distribution-Demand-Primary | 769,670,072 | 414,953,153 |
| 17 | 179 | RBASE_DISDSEC | RBASE - Distribution-Demand-Secondary | 359,684,935 | 214,478,035 |
| 18 | 180 | RBASE_DISCSRV | RBASE - Distribution-Customer-Services | 130,327,338 | 119,157,733 |
| 19 | 181 | RBASE_DISCMTR | RBASE - Distribution-Customer-Meters | 75,640,672 | 48,698,272 |
| 20 | 182 | RBASE_DISCMTRR | RBASE - Distribution-Customer-Meter Reading | 26,094,375 | 23,334,648 |
| 21 | 183 | RBASE_DISCBIL | RBASE - Distribution-Customer-Billing & Collections | 35,666,980 | 31,894,859 |
| 22 | 184 | RBASE_DISCINF | RBASE - Distribution-Customer-Service & Info | - | - |
| 23 | 185 | RBASE_DISCOTH | RBASE - Distribution-Customer-Other | 39,424,767 | 17,164,554 |
| 24 | 186 | | | | |
| 25 | 187 | | | | |
| 26 | 188 | TOTAL_O&M_PROD | Total O&M Expense - Production-Demand | 112,517,172 | 56,700,755 |
| 27 | 189 | TOTAL_O&M_PROEF | Total O&M Expense - Production-Energy-Fuel | - | - |
| 28 | 190 | TOTAL_O&M_PROENF | Total O&M Expense - Production-Energy-Non-Fuel | 33,510,292 | 12,924,352 |
| 29 | 191 | TOTAL_O&M_STO_PRO_D | Total O&M Expense - Storage-Production-Demand | 39,475,908 | 19,893,086 |
| 30 | 192 | TOTAL_O&M_STO_TRA_D | Total O&M Expense - Storage-Transmission-Demand | 42,801,775 | 18,490,859 |
| 31 | 193 | TOTAL_O&M_STO_DIS_DSUB | Total O&M Expense - Storage-Distribution-Demand-Subs | 8,787 | 4,499 |
| 32 | 194 | TOTAL_O&M_STO_DIS_DPRI | Total O&M Expense - Storage-Distribution-Demand-Primary | 22,211 | 11,975 |
| 33 | 195 | TOTAL_O&M_STO_DIS_DSEC | Total O&M Expense - Storage-Distribution-Demand-Secondary | - | - |
| 34 | 196 | TOTAL_O&M_TRAD | Total O&M Expense - Transmission-Demand | 56,397,581 | 24,364,404 |
| 35 | 197 | TOTAL_O&M_DISDSUB | Total O&M Expense - Distribution-Demand-Subs | 11,537,702 | 5,907,817 |
| 36 | 198 | TOTAL_O&M_DISDPRI | Total O&M Expense - Distribution-Demand-Primary | 32,508,393 | 17,526,289 |
| 37 | 199 | TOTAL_O&M_DISDSEC | Total O&M Expense - Distribution-Demand-Secondary | 15,191,937 | 9,058,864 |
| 38 | 200 | TOTAL_O&M_DISCSRV | Total O&M Expense - Distribution-Customer-Services | 1,860,948 | 1,701,457 |
| 39 | 201 | TOTAL_O&M_DISCMTR | Total O&M Expense - Distribution-Customer-Meters | 15,207,857 | 9,790,981 |
| 40 | 202 | TOTAL_O&M_DISCMTRR | Total O&M Expense - Distribution-Customer-Meter Reading | 17,350,709 | 15,515,708 |

This schedule is sponsored by PNM Witness Larkin

**PUBLIC SERVICE OF NEW MEXICO**
**Base Period Ending June 30th, 2026**

| Class_Factors Line No. | Factor No. | | | Schedule 1B Residential | Schedule 2 Small Power |
|---|---|---|---|---|---|
| 2 | 110 | LA_DISCMTRR | Labor - Distribution-Customer-Meter Reading | - | 490,393 |
| 3 | 111 | LA_DISCBIL | Labor - Distribution-Customer-Billing & Collections | - | 670,292 |
| 4 | 112 | LA_DISCINF | Labor - Distribution-Customer-Service & Info | - | - |
| 5 | 113 | LA_DISCOTH | Labor - Distribution-Customer-Other | 0 | 543,089 |
| 6 | 168 | RBASE_PROD | RBASE - Production-Demand | 0 | 101,494,991 |
| 7 | 169 | RBASE_PROEF | RBASE - Production-Energy-Fuel | - | - |
| 8 | 170 | RBASE_PROENF | RBASE - Production-Energy-Non-Fuel | - | 9,792,737 |
| 9 | 171 | RBASE_STO_PRO_D | RBASE - Storage-Production-Demand | 0 | 7,730,776 |
| 10 | 172 | RBASE_STO_TRA_D | RBASE - Storage-Transmission-Demand | 0 | 5,494,804 |
| 11 | 173 | RBASE_STO_DIS_DSUB | RBASE - Storage-Distribution-Demand-Subs | 0 | 236,832 |
| 12 | 174 | RBASE_STO_DIS_DPRI | RBASE - Storage-Distribution-Demand-Primary | 0 | 630,339 |
| 13 | 175 | RBASE_STO_DIS_DSEC | RBASE - Storage-Distribution-Demand-Secondary | - | - |
| 14 | 176 | RBASE_TRAD | RBASE - Transmission-Demand | 0 | 58,975,350 |
| 15 | 177 | RBASE_DISDSUB | RBASE - Distribution-Demand-Subs | 0 | 37,673,301 |
| 16 | 178 | RBASE_DISDPRI | RBASE - Distribution-Demand-Primary | 0 | 100,243,877 |
| 17 | 179 | RBASE_DISDSEC | RBASE - Distribution-Demand-Secondary | 0 | 51,813,342 |
| 18 | 180 | RBASE_DISCSRV | RBASE - Distribution-Customer-Services | 0 | 11,169,604 |
| 19 | 181 | RBASE_DISCMTR | RBASE - Distribution-Customer-Meters | 0 | 15,789,144 |
| 20 | 182 | RBASE_DISCMTRR | RBASE - Distribution-Customer-Meter Reading | (0) | 2,527,119 |
| 21 | 183 | RBASE_DISCBIL | RBASE - Distribution-Customer-Billing & Collections | (0) | 3,454,181 |
| 22 | 184 | RBASE_DISCINF | RBASE - Distribution-Customer-Service & Info | - | - |
| 23 | 185 | RBASE_DISCOTH | RBASE - Distribution-Customer-Other | (0) | 2,517,690 |
| 24 | 186 | | | | |
| 25 | 187 | | | | |
| 26 | 188 | TOTAL_O&M_PROD | Total O&M Expense - Production-Demand | 0 | 12,757,063 |
| 27 | 189 | TOTAL_O&M_PROEF | Total O&M Expense - Production-Energy-Fuel | - | - |
| 28 | 190 | TOTAL_O&M_PROENF | Total O&M Expense - Production-Energy-Non-Fuel | - | 3,818,548 |
| 29 | 191 | TOTAL_O&M_STO_PRO_D | Total O&M Expense - Storage-Production-Demand | - | 4,475,731 |
| 30 | 192 | TOTAL_O&M_STO_TRA_D | Total O&M Expense - Storage-Transmission-Demand | - | 4,266,868 |
| 31 | 193 | TOTAL_O&M_STO_DIS_DSUB | Total O&M Expense - Storage-Distribution-Demand-Subs | - | 1,087 |
| 32 | 194 | TOTAL_O&M_STO_DIS_DPRI | Total O&M Expense - Storage-Distribution-Demand-Primary | - | 2,893 |
| 33 | 195 | TOTAL_O&M_STO_DIS_DSEC | Total O&M Expense - Storage-Distribution-Demand-Secondary | - | - |
| 34 | 196 | TOTAL_O&M_TRAD | Total O&M Expense - Transmission-Demand | 0 | 5,622,222 |
| 35 | 197 | TOTAL_O&M_DISDSUB | Total O&M Expense - Distribution-Demand-Subs | 0 | 1,427,203 |
| 36 | 198 | TOTAL_O&M_DISDPRI | Total O&M Expense - Distribution-Demand-Primary | 0 | 4,233,980 |
| 37 | 199 | TOTAL_O&M_DISDSEC | Total O&M Expense - Distribution-Demand-Secondary | 0 | 2,188,429 |
| 38 | 200 | TOTAL_O&M_DISCSRV | Total O&M Expense - Distribution-Customer-Services | 0 | 159,491 |
| 39 | 201 | TOTAL_O&M_DISCMTR | Total O&M Expense - Distribution-Customer-Meters | 0 | 3,174,470 |
| 40 | 202 | TOTAL_O&M_DISCMTRR | Total O&M Expense - Distribution-Customer-Meter Reading | - | 1,680,335 |

This schedule is sponsored by PNM Witness Larkin

**PUBLIC SERVICE OF NEW MEXICO**
**Base Period Ending June 30th, 2026**

| Class_Factors Line No. | Factor No. | | | Schedule 2B Small Power | Schedule 3B General Power |
|---|---|---|---|---|---|
| 2 | 110 | LA_DISCMTRR | Labor - Distribution-Customer-Meter Reading | - | 25,411 |
| 3 | 111 | LA_DISCBIL | Labor - Distribution-Customer-Billing & Collections | - | 34,733 |
| 4 | 112 | LA_DISCINF | Labor - Distribution-Customer-Service & Info | - | - |
| 5 | 113 | LA_DISCOTH | Labor - Distribution-Customer-Other | 0 | 202,084 |
| 6 | 168 | RBASE_PROD | RBASE - Production-Demand | 0 | 147,879,623 |
| 7 | 169 | RBASE_PROEF | RBASE - Production-Energy-Fuel | - | - |
| 8 | 170 | RBASE_PROENF | RBASE - Production-Energy-Non-Fuel | - | 14,306,299 |
| 9 | 171 | RBASE_STO_PRO_D | RBASE - Storage-Production-Demand | 0 | 11,263,849 |
| 10 | 172 | RBASE_STO_TRA_D | RBASE - Storage-Transmission-Demand | 0 | 8,148,666 |
| 11 | 173 | RBASE_STO_DIS_DSUB | RBASE - Storage-Distribution-Demand-Subs | 0 | 286,935 |
| 12 | 174 | RBASE_STO_DIS_DPRI | RBASE - Storage-Distribution-Demand-Primary | 0 | 763,691 |
| 13 | 175 | RBASE_STO_DIS_DSEC | RBASE - Storage-Distribution-Demand-Secondary | - | - |
| 14 | 176 | RBASE_TRAD | RBASE - Transmission-Demand | 0 | 87,459,071 |
| 15 | 177 | RBASE_DISDSUB | RBASE - Distribution-Demand-Subs | 0 | 45,643,338 |
| 16 | 178 | RBASE_DISDPRI | RBASE - Distribution-Demand-Primary | 0 | 121,451,135 |
| 17 | 179 | RBASE_DISDSEC | RBASE - Distribution-Demand-Secondary | 0 | 62,774,799 |
| 18 | 180 | RBASE_DISCSRV | RBASE - Distribution-Customer-Services | 0 | - |
| 19 | 181 | RBASE_DISCMTR | RBASE - Distribution-Customer-Meters | 0 | 4,745,675 |
| 20 | 182 | RBASE_DISCMTRR | RBASE - Distribution-Customer-Meter Reading | (0) | 130,950 |
| 21 | 183 | RBASE_DISCBIL | RBASE - Distribution-Customer-Billing & Collections | (0) | 178,988 |
| 22 | 184 | RBASE_DISCINF | RBASE - Distribution-Customer-Service & Info | - | - |
| 23 | 185 | RBASE_DISCOTH | RBASE - Distribution-Customer-Other | (0) | 503,348 |
| 24 | 186 | | | | |
| 25 | 187 | | | | |
| 26 | 188 | TOTAL_O&M_PROD | Total O&M Expense - Production-Demand | 0 | 18,587,219 |
| 27 | 189 | TOTAL_O&M_PROEF | Total O&M Expense - Production-Energy-Fuel | - | - |
| 28 | 190 | TOTAL_O&M_PROENF | Total O&M Expense - Production-Energy-Non-Fuel | - | 5,578,552 |
| 29 | 191 | TOTAL_O&M_STO_PRO_D | Total O&M Expense - Storage-Production-Demand | - | 6,521,203 |
| 30 | 192 | TOTAL_O&M_STO_TRA_D | Total O&M Expense - Storage-Transmission-Demand | - | 6,327,667 |
| 31 | 193 | TOTAL_O&M_STO_DIS_DSUB | Total O&M Expense - Storage-Distribution-Demand-Subs | - | 1,317 |
| 32 | 194 | TOTAL_O&M_STO_DIS_DPRI | Total O&M Expense - Storage-Distribution-Demand-Primary | - | 3,505 |
| 33 | 195 | TOTAL_O&M_STO_DIS_DSEC | Total O&M Expense - Storage-Distribution-Demand-Secondary | - | - |
| 34 | 196 | TOTAL_O&M_TRAD | Total O&M Expense - Transmission-Demand | 0 | 8,337,624 |
| 35 | 197 | TOTAL_O&M_DISDSUB | Total O&M Expense - Distribution-Demand-Subs | 0 | 1,729,138 |
| 36 | 198 | TOTAL_O&M_DISDPRI | Total O&M Expense - Distribution-Demand-Primary | 0 | 5,129,706 |
| 37 | 199 | TOTAL_O&M_DISDSEC | Total O&M Expense - Distribution-Demand-Secondary | 0 | 2,651,406 |
| 38 | 200 | TOTAL_O&M_DISCSRV | Total O&M Expense - Distribution-Customer-Services | 0 | - |
| 39 | 201 | TOTAL_O&M_DISCMTR | Total O&M Expense - Distribution-Customer-Meters | 0 | 954,137 |
| 40 | 202 | TOTAL_O&M_DISCMTRR | Total O&M Expense - Distribution-Customer-Meter Reading | - | 87,071 |

This schedule is sponsored by PNM Witness Larkin

**PUBLIC SERVICE OF NEW MEXICO**
**Base Period Ending June 30th, 2026**

| Class_Factors Line No. | Factor No. | | | Schedule 3C GP Low LF | Schedule 3D General Power Gov |
|---|---|---|---|---|---|
| 2 | 110 | LA_DISCMTRR | Labor - Distribution-Customer-Meter Reading | 11,142 | 1,572 |
| 3 | 111 | LA_DISCBIL | Labor - Distribution-Customer-Billing & Collections | 15,230 | 2,149 |
| 4 | 112 | LA_DISCINF | Labor - Distribution-Customer-Service & Info | - | - |
| 5 | 113 | LA_DISCOTH | Labor - Distribution-Customer-Other | 50,402 | 14,258 |
| 6 | 168 | RBASE_PROD | RBASE - Production-Demand | 31,206,941 | 10,031,783 |
| 7 | 169 | RBASE_PROEF | RBASE - Production-Energy-Fuel | - | - |
| 8 | 170 | RBASE_PROENF | RBASE - Production-Energy-Non-Fuel | 3,242,017 | 1,024,348 |
| 9 | 171 | RBASE_STO_PRO_D | RBASE - Storage-Production-Demand | 2,377,003 | 764,111 |
| 10 | 172 | RBASE_STO_TRA_D | RBASE - Storage-Transmission-Demand | 1,651,050 | 559,305 |
| 11 | 173 | RBASE_STO_DIS_DSUB | RBASE - Storage-Distribution-Demand-Subs | 87,948 | 19,266 |
| 12 | 174 | RBASE_STO_DIS_DPRI | RBASE - Storage-Distribution-Demand-Primary | 234,078 | 51,277 |
| 13 | 175 | RBASE_STO_DIS_DSEC | RBASE - Storage-Distribution-Demand-Secondary | - | - |
| 14 | 176 | RBASE_TRAD | RBASE - Transmission-Demand | 17,720,602 | 6,002,980 |
| 15 | 177 | RBASE_DISDSUB | RBASE - Distribution-Demand-Subs | 13,990,059 | 3,064,661 |
| 16 | 178 | RBASE_DISDPRI | RBASE - Distribution-Demand-Primary | 37,225,771 | 8,154,675 |
| 17 | 179 | RBASE_DISDSEC | RBASE - Distribution-Demand-Secondary | 19,240,992 | 4,214,930 |
| 18 | 180 | RBASE_DISCSRV | RBASE - Distribution-Customer-Services | - | - |
| 19 | 181 | RBASE_DISCMTR | RBASE - Distribution-Customer-Meters | 2,080,874 | 293,651 |
| 20 | 182 | RBASE_DISCMTRR | RBASE - Distribution-Customer-Meter Reading | 57,419 | 8,103 |
| 21 | 183 | RBASE_DISCBIL | RBASE - Distribution-Customer-Billing & Collections | 78,482 | 11,075 |
| 22 | 184 | RBASE_DISCINF | RBASE - Distribution-Customer-Service & Info | - | - |
| 23 | 185 | RBASE_DISCOTH | RBASE - Distribution-Customer-Other | 258,306 | 72,587 |
| 24 | 186 | | | | |
| 25 | 187 | | | | |
| 26 | 188 | TOTAL_O&M_PROD | Total O&M Expense - Production-Demand | 3,922,449 | 1,260,910 |
| 27 | 189 | TOTAL_O&M_PROEF | Total O&M Expense - Production-Energy-Fuel | - | - |
| 28 | 190 | TOTAL_O&M_PROENF | Total O&M Expense - Production-Energy-Non-Fuel | 1,264,182 | 399,431 |
| 29 | 191 | TOTAL_O&M_STO_PRO_D | Total O&M Expense - Storage-Production-Demand | 1,376,165 | 442,382 |
| 30 | 192 | TOTAL_O&M_STO_TRA_D | Total O&M Expense - Storage-Transmission-Demand | 1,282,086 | 434,316 |
| 31 | 193 | TOTAL_O&M_STO_DIS_DSUB | Total O&M Expense - Storage-Distribution-Demand-Subs | 404 | 88 |
| 32 | 194 | TOTAL_O&M_STO_DIS_DPRI | Total O&M Expense - Storage-Distribution-Demand-Primary | 1,074 | 235 |
| 33 | 195 | TOTAL_O&M_STO_DIS_DSEC | Total O&M Expense - Storage-Distribution-Demand-Secondary | - | - |
| 34 | 196 | TOTAL_O&M_TRAD | Total O&M Expense - Transmission-Demand | 1,689,335 | 572,274 |
| 35 | 197 | TOTAL_O&M_DISDSUB | Total O&M Expense - Distribution-Demand-Subs | 529,995 | 116,101 |
| 36 | 198 | TOTAL_O&M_DISDPRI | Total O&M Expense - Distribution-Demand-Primary | 1,572,297 | 344,427 |
| 37 | 199 | TOTAL_O&M_DISDSEC | Total O&M Expense - Distribution-Demand-Secondary | 812,678 | 178,025 |
| 38 | 200 | TOTAL_O&M_DISCSRV | Total O&M Expense - Distribution-Customer-Services | - | - |
| 39 | 201 | TOTAL_O&M_DISCMTR | Total O&M Expense - Distribution-Customer-Meters | 418,368 | 59,040 |
| 40 | 202 | TOTAL_O&M_DISCMTRR | Total O&M Expense - Distribution-Customer-Meter Reading | 38,179 | 5,388 |

This schedule is sponsored by PNM Witness Larkin

**PUBLIC SERVICE OF NEW MEXICO**
**Base Period Ending June 30th, 2026**

| Class_Factors Line No. | Factor No. | | | Schedule 3E GP Low LF Gov |
|---|---|---|---|---|
| 2 | 110 | LA_DISCMTRR | Labor - Distribution-Customer-Meter Reading | 651 |
| 3 | 111 | LA_DISCBIL | Labor - Distribution-Customer-Billing & Collections | 889 |
| 4 | 112 | LA_DISCINF | Labor - Distribution-Customer-Service & Info | - |
| 5 | 113 | LA_DISCOTH | Labor - Distribution-Customer-Other | 3,601 |
| 6 | 168 | RBASE_PROD | RBASE - Production-Demand | 2,573,361 |
| 7 | 169 | RBASE_PROEF | RBASE - Production-Energy-Fuel | - |
| 8 | 170 | RBASE_PROENF | RBASE - Production-Energy-Non-Fuel | 241,494 |
| 9 | 171 | RBASE_STO_PRO_D | RBASE - Storage-Production-Demand | 196,010 |
| 10 | 172 | RBASE_STO_TRA_D | RBASE - Storage-Transmission-Demand | 132,901 |
| 11 | 173 | RBASE_STO_DIS_DSUB | RBASE - Storage-Distribution-Demand-Subs | 7,889 |
| 12 | 174 | RBASE_STO_DIS_DPRI | RBASE - Storage-Distribution-Demand-Primary | 20,997 |
| 13 | 175 | RBASE_STO_DIS_DSEC | RBASE - Storage-Distribution-Demand-Secondary | - |
| 14 | 176 | RBASE_TRAD | RBASE - Transmission-Demand | 1,426,422 |
| 15 | 177 | RBASE_DISDSUB | RBASE - Distribution-Demand-Subs | 1,254,925 |
| 16 | 178 | RBASE_DISDPRI | RBASE - Distribution-Demand-Primary | 3,339,195 |
| 17 | 179 | RBASE_DISDSEC | RBASE - Distribution-Demand-Secondary | 1,725,939 |
| 18 | 180 | RBASE_DISCSRV | RBASE - Distribution-Customer-Services | - |
| 19 | 181 | RBASE_DISCMTR | RBASE - Distribution-Customer-Meters | 121,511 |
| 20 | 182 | RBASE_DISCMTRR | RBASE - Distribution-Customer-Meter Reading | 3,353 |
| 21 | 183 | RBASE_DISCBIL | RBASE - Distribution-Customer-Billing & Collections | 4,583 |
| 22 | 184 | RBASE_DISCINF | RBASE - Distribution-Customer-Service & Info | - |
| 23 | 185 | RBASE_DISCOTH | RBASE - Distribution-Customer-Other | 18,410 |
| 24 | 186 | | | |
| 25 | 187 | | | |
| 26 | 188 | TOTAL_O&M_PROD | Total O&M Expense - Production-Demand | 323,450 |
| 27 | 189 | TOTAL_O&M_PROEF | Total O&M Expense - Production-Energy-Fuel | - |
| 28 | 190 | TOTAL_O&M_PROENF | Total O&M Expense - Production-Energy-Non-Fuel | 94,168 |
| 29 | 191 | TOTAL_O&M_STO_PRO_D | Total O&M Expense - Storage-Production-Demand | 113,480 |
| 30 | 192 | TOTAL_O&M_STO_TRA_D | Total O&M Expense - Storage-Transmission-Demand | 103,202 |
| 31 | 193 | TOTAL_O&M_STO_DIS_DSUB | Total O&M Expense - Storage-Distribution-Demand-Subs | 36 |
| 32 | 194 | TOTAL_O&M_STO_DIS_DPRI | Total O&M Expense - Storage-Distribution-Demand-Primary | 96 |
| 33 | 195 | TOTAL_O&M_STO_DIS_DSEC | Total O&M Expense - Storage-Distribution-Demand-Secondary | - |
| 34 | 196 | TOTAL_O&M_TRAD | Total O&M Expense - Transmission-Demand | 135,983 |
| 35 | 197 | TOTAL_O&M_DISDSUB | Total O&M Expense - Distribution-Demand-Subs | 47,541 |
| 36 | 198 | TOTAL_O&M_DISDPRI | Total O&M Expense - Distribution-Demand-Primary | 141,037 |
| 37 | 199 | TOTAL_O&M_DISDSEC | Total O&M Expense - Distribution-Demand-Secondary | 72,898 |
| 38 | 200 | TOTAL_O&M_DISCSRV | Total O&M Expense - Distribution-Customer-Services | - |
| 39 | 201 | TOTAL_O&M_DISCMTR | Total O&M Expense - Distribution-Customer-Meters | 24,430 |
| 40 | 202 | TOTAL_O&M_DISCMTRR | Total O&M Expense - Distribution-Customer-Meter Reading | 2,229 |

This schedule is sponsored by PNM Witness Larkin

**PUBLIC SERVICE OF NEW MEXICO**
**Base Period Ending June 30th, 2026**

| Class_Factors Line No. | Factor No. | | | Schedule 3F GP Charging Stations | Schedule 4 Large Power |
|---|---|---|---|---|---|
| 2 | 110 | LA_DISCMTRR | Labor - Distribution-Customer-Meter Reading | 145 | 1,581 |
| 3 | 111 | LA_DISCBIL | Labor - Distribution-Customer-Billing & Collections | 198 | 2,162 |
| 4 | 112 | LA_DISCINF | Labor - Distribution-Customer-Service & Info | - | - |
| 5 | 113 | LA_DISCOTH | Labor - Distribution-Customer-Other | 995 | 108,945 |
| 6 | 168 | RBASE_PROD | RBASE - Production-Demand | 623,488 | 73,868,523 |
| 7 | 169 | RBASE_PROEF | RBASE - Production-Energy-Fuel | - | - |
| 8 | 170 | RBASE_PROENF | RBASE - Production-Energy-Non-Fuel | 69,116 | 8,535,303 |
| 9 | 171 | RBASE_STO_PRO_D | RBASE - Storage-Production-Demand | 47,490 | 5,626,494 |
| 10 | 172 | RBASE_STO_TRA_D | RBASE - Storage-Transmission-Demand | 29,824 | 4,052,711 |
| 11 | 173 | RBASE_STO_DIS_DSUB | RBASE - Storage-Distribution-Demand-Subs | 3,337 | 130,594 |
| 12 | 174 | RBASE_STO_DIS_DPRI | RBASE - Storage-Distribution-Demand-Primary | 8,881 | 347,581 |
| 13 | 175 | RBASE_STO_DIS_DSEC | RBASE - Storage-Distribution-Demand-Secondary | - | - |
| 14 | 176 | RBASE_TRAD | RBASE - Transmission-Demand | 320,102 | 43,497,464 |
| 15 | 177 | RBASE_DISDSUB | RBASE - Distribution-Demand-Subs | 530,783 | 20,773,820 |
| 16 | 178 | RBASE_DISDPRI | RBASE - Distribution-Demand-Primary | 1,412,346 | 55,276,501 |
| 17 | 179 | RBASE_DISDSEC | RBASE - Distribution-Demand-Secondary | 730,003 | - |
| 18 | 180 | RBASE_DISCSRV | RBASE - Distribution-Customer-Services | - | - |
| 19 | 181 | RBASE_DISCMTR | RBASE - Distribution-Customer-Meters | 27,002 | 1,576,526 |
| 20 | 182 | RBASE_DISCMTRR | RBASE - Distribution-Customer-Meter Reading | 745 | 8,149 |
| 21 | 183 | RBASE_DISCBIL | RBASE - Distribution-Customer-Billing & Collections | 1,018 | 11,139 |
| 22 | 184 | RBASE_DISCINF | RBASE - Distribution-Customer-Service & Info | - | - |
| 23 | 185 | RBASE_DISCOTH | RBASE - Distribution-Customer-Other | 5,076 | 551,440 |
| 24 | 186 | | | | |
| 25 | 187 | | | | |
| 26 | 188 | TOTAL_O&M_PROD | Total O&M Expense - Production-Demand | 78,367 | 9,284,649 |
| 27 | 189 | TOTAL_O&M_PROEF | Total O&M Expense - Production-Energy-Fuel | - | - |
| 28 | 190 | TOTAL_O&M_PROENF | Total O&M Expense - Production-Energy-Non-Fuel | 26,951 | 3,328,228 |
| 29 | 191 | TOTAL_O&M_STO_PRO_D | Total O&M Expense - Storage-Production-Demand | 27,495 | 3,257,458 |
| 30 | 192 | TOTAL_O&M_STO_TRA_D | Total O&M Expense - Storage-Transmission-Demand | 23,159 | 3,147,043 |
| 31 | 193 | TOTAL_O&M_STO_DIS_DSUB | Total O&M Expense - Storage-Distribution-Demand-Subs | 15 | 599 |
| 32 | 194 | TOTAL_O&M_STO_DIS_DPRI | Total O&M Expense - Storage-Distribution-Demand-Primary | 41 | 1,595 |
| 33 | 195 | TOTAL_O&M_STO_DIS_DSEC | Total O&M Expense - Storage-Distribution-Demand-Secondary | - | - |
| 34 | 196 | TOTAL_O&M_TRAD | Total O&M Expense - Transmission-Demand | 30,516 | 4,146,688 |
| 35 | 197 | TOTAL_O&M_DISDSUB | Total O&M Expense - Distribution-Demand-Subs | 20,108 | 786,989 |
| 36 | 198 | TOTAL_O&M_DISDPRI | Total O&M Expense - Distribution-Demand-Primary | 59,653 | 2,334,702 |
| 37 | 199 | TOTAL_O&M_DISDSEC | Total O&M Expense - Distribution-Demand-Secondary | 30,833 | - |
| 38 | 200 | TOTAL_O&M_DISCSRV | Total O&M Expense - Distribution-Customer-Services | - | - |
| 39 | 201 | TOTAL_O&M_DISCMTR | Total O&M Expense - Distribution-Customer-Meters | 5,429 | 316,967 |
| 40 | 202 | TOTAL_O&M_DISCMTRR | Total O&M Expense - Distribution-Customer-Meter Reading | 495 | 5,419 |

This schedule is sponsored by PNM Witness Larkin

**PUBLIC SERVICE OF NEW MEXICO**
**Base Period Ending June 30th, 2026**

| Class_Factors Line No. | Factor No. | | | Schedule 5 Industrial Power | Schedule 10 Irrigation |
|---|---|---|---|---|---|
| 2 | 110 | LA_DISCMTRR | Labor - Distribution-Customer-Meter Reading | 9 | 2,856 |
| 3 | 111 | LA_DISCBIL | Labor - Distribution-Customer-Billing & Collections | 12 | 3,903 |
| 4 | 112 | LA_DISCINF | Labor - Distribution-Customer-Service & Info | - | - |
| 5 | 113 | LA_DISCOTH | Labor - Distribution-Customer-Other | 1,517 | 5,418 |
| 6 | 168 | RBASE_PROD | RBASE - Production-Demand | 1,547,538 | 2,105,272 |
| 7 | 169 | RBASE_PROEF | RBASE - Production-Energy-Fuel | - | - |
| 8 | 170 | RBASE_PROENF | RBASE - Production-Energy-Non-Fuel | 119,767 | 235,931 |
| 9 | 171 | RBASE_STO_PRO_D | RBASE - Storage-Production-Demand | 117,874 | 160,357 |
| 10 | 172 | RBASE_STO_TRA_D | RBASE - Storage-Transmission-Demand | 84,904 | 110,806 |
| 11 | 173 | RBASE_STO_DIS_DSUB | RBASE - Storage-Distribution-Demand-Subs | - | 5,999 |
| 12 | 174 | RBASE_STO_DIS_DPRI | RBASE - Storage-Distribution-Demand-Primary | - | 15,966 |
| 13 | 175 | RBASE_STO_DIS_DSEC | RBASE - Storage-Distribution-Demand-Secondary | - | - |
| 14 | 176 | RBASE_TRAD | RBASE - Transmission-Demand | 911,267 | 1,189,270 |
| 15 | 177 | RBASE_DISDSUB | RBASE - Distribution-Demand-Subs | - | 954,218 |
| 16 | 178 | RBASE_DISDPRI | RBASE - Distribution-Demand-Primary | - | 2,539,054 |
| 17 | 179 | RBASE_DISDSEC | RBASE - Distribution-Demand-Secondary | - | 1,312,368 |
| 18 | 180 | RBASE_DISCSRV | RBASE - Distribution-Customer-Services | - | - |
| 19 | 181 | RBASE_DISCMTR | RBASE - Distribution-Customer-Meters | 9,009 | 533,298 |
| 20 | 182 | RBASE_DISCMTRR | RBASE - Distribution-Customer-Meter Reading | 47 | 14,716 |
| 21 | 183 | RBASE_DISCBIL | RBASE - Distribution-Customer-Billing & Collections | 64 | 20,114 |
| 22 | 184 | RBASE_DISCINF | RBASE - Distribution-Customer-Service & Info | - | - |
| 23 | 185 | RBASE_DISCOTH | RBASE - Distribution-Customer-Other | 7,677 | 28,273 |
| 24 | 186 | | | | |
| 25 | 187 | | | | |
| 26 | 188 | TOTAL_O&M_PROD | Total O&M Expense - Production-Demand | 194,512 | 264,615 |
| 27 | 189 | TOTAL_O&M_PROEF | Total O&M Expense - Production-Energy-Fuel | - | - |
| 28 | 190 | TOTAL_O&M_PROENF | Total O&M Expense - Production-Energy-Non-Fuel | 46,702 | 91,998 |
| 29 | 191 | TOTAL_O&M_STO_PRO_D | Total O&M Expense - Storage-Production-Demand | 68,243 | 92,838 |
| 30 | 192 | TOTAL_O&M_STO_TRA_D | Total O&M Expense - Storage-Transmission-Demand | 65,930 | 86,044 |
| 31 | 193 | TOTAL_O&M_STO_DIS_DSUB | Total O&M Expense - Storage-Distribution-Demand-Subs | - | 28 |
| 32 | 194 | TOTAL_O&M_STO_DIS_DPRI | Total O&M Expense - Storage-Distribution-Demand-Primary | - | 73 |
| 33 | 195 | TOTAL_O&M_STO_DIS_DSEC | Total O&M Expense - Storage-Distribution-Demand-Secondary | - | - |
| 34 | 196 | TOTAL_O&M_TRAD | Total O&M Expense - Transmission-Demand | 86,873 | 113,375 |
| 35 | 197 | TOTAL_O&M_DISDSUB | Total O&M Expense - Distribution-Demand-Subs | - | 36,149 |
| 36 | 198 | TOTAL_O&M_DISDPRI | Total O&M Expense - Distribution-Demand-Primary | - | 107,242 |
| 37 | 199 | TOTAL_O&M_DISDSEC | Total O&M Expense - Distribution-Demand-Secondary | - | 55,430 |
| 38 | 200 | TOTAL_O&M_DISCSRV | Total O&M Expense - Distribution-Customer-Services | - | - |
| 39 | 201 | TOTAL_O&M_DISCMTR | Total O&M Expense - Distribution-Customer-Meters | 1,811 | 107,222 |
| 40 | 202 | TOTAL_O&M_DISCMTRR | Total O&M Expense - Distribution-Customer-Meter Reading | 31 | 9,785 |

This schedule is sponsored by PNM Witness Larkin

**PUBLIC SERVICE OF NEW MEXICO**
**Base Period Ending June 30th, 2026**

| Class_Factors Line No. | Factor No. | | | Schedule 11 Water & Sewage | Schedule 15 Industrial Power |
|---|---|---|---|---|---|
| 2 | 110 | LA_DISCMTRR | Labor - Distribution-Customer-Meter Reading | 1,455 | 36.15 |
| 3 | 111 | LA_DISCBIL | Labor - Distribution-Customer-Billing & Collections | 1,989 | 49.41 |
| 4 | 112 | LA_DISCINF | Labor - Distribution-Customer-Service & Info | - | - |
| 5 | 113 | LA_DISCOTH | Labor - Distribution-Customer-Other | 23,183 | 8,731.15 |
| 6 | 168 | RBASE_PROD | RBASE - Production-Demand | 7,662,410 | 5,467,266.33 |
| 7 | 169 | RBASE_PROEF | RBASE - Production-Energy-Fuel | - | - |
| 8 | 170 | RBASE_PROENF | RBASE - Production-Energy-Non-Fuel | 1,740,336 | 690,190.93 |
| 9 | 171 | RBASE_STO_PRO_D | RBASE - Storage-Production-Demand | 583,638 | 416,436.41 |
| 10 | 172 | RBASE_STO_TRA_D | RBASE - Storage-Transmission-Demand | 510,489 | 299,263.37 |
| 11 | 173 | RBASE_STO_DIS_DSUB | RBASE - Storage-Distribution-Demand-Subs | 43,724 | - |
| 12 | 174 | RBASE_STO_DIS_DPRI | RBASE - Storage-Distribution-Demand-Primary | 116,373 | - |
| 13 | 175 | RBASE_STO_DIS_DSEC | RBASE - Storage-Distribution-Demand-Secondary | - | - |
| 14 | 176 | RBASE_TRAD | RBASE - Transmission-Demand | 5,479,046 | 3,211,973.20 |
| 15 | 177 | RBASE_DISDSUB | RBASE - Distribution-Demand-Subs | 6,955,212 | - |
| 16 | 178 | RBASE_DISDPRI | RBASE - Distribution-Demand-Primary | 18,506,937 | - |
| 17 | 179 | RBASE_DISDSEC | RBASE - Distribution-Demand-Secondary | - | - |
| 18 | 180 | RBASE_DISCSRV | RBASE - Distribution-Customer-Services | - | - |
| 19 | 181 | RBASE_DISCMTR | RBASE - Distribution-Customer-Meters | 1,450,404 | 36,034.88 |
| 20 | 182 | RBASE_DISCMTRR | RBASE - Distribution-Customer-Meter Reading | 7,497 | 186.27 |
| 21 | 183 | RBASE_DISCBIL | RBASE - Distribution-Customer-Billing & Collections | 10,248 | 254.61 |
| 22 | 184 | RBASE_DISCINF | RBASE - Distribution-Customer-Service & Info | - | - |
| 23 | 185 | RBASE_DISCOTH | RBASE - Distribution-Customer-Other | 117,686 | 44,166.04 |
| 24 | 186 | | | | |
| 25 | 187 | | | | |
| 26 | 188 | TOTAL_O&M_PROD | Total O&M Expense - Production-Demand | 963,100 | 687,189.18 |
| 27 | 189 | TOTAL_O&M_PROEF | Total O&M Expense - Production-Energy-Fuel | - | - |
| 28 | 190 | TOTAL_O&M_PROENF | Total O&M Expense - Production-Energy-Non-Fuel | 678,621 | 269,130.82 |
| 29 | 191 | TOTAL_O&M_STO_PRO_D | Total O&M Expense - Storage-Production-Demand | 337,897 | 241,095.80 |
| 30 | 192 | TOTAL_O&M_STO_TRA_D | Total O&M Expense - Storage-Transmission-Demand | 396,409 | 232,386.36 |
| 31 | 193 | TOTAL_O&M_STO_DIS_DSUB | Total O&M Expense - Storage-Distribution-Demand-Subs | 201 | - |
| 32 | 194 | TOTAL_O&M_STO_DIS_DPRI | Total O&M Expense - Storage-Distribution-Demand-Primary | 534 | - |
| 33 | 195 | TOTAL_O&M_STO_DIS_DSEC | Total O&M Expense - Storage-Distribution-Demand-Secondary | - | - |
| 34 | 196 | TOTAL_O&M_TRAD | Total O&M Expense - Transmission-Demand | 522,327 | 306,202.93 |
| 35 | 197 | TOTAL_O&M_DISDSUB | Total O&M Expense - Distribution-Demand-Subs | 263,489 | - |
| 36 | 198 | TOTAL_O&M_DISDPRI | Total O&M Expense - Distribution-Demand-Primary | 781,674 | - |
| 37 | 199 | TOTAL_O&M_DISDSEC | Total O&M Expense - Distribution-Demand-Secondary | - | - |
| 38 | 200 | TOTAL_O&M_DISCSRV | Total O&M Expense - Distribution-Customer-Services | - | - |
| 39 | 201 | TOTAL_O&M_DISCMTR | Total O&M Expense - Distribution-Customer-Meters | 291,609 | 7,244.96 |
| 40 | 202 | TOTAL_O&M_DISCMTRR | Total O&M Expense - Distribution-Customer-Meter Reading | 4,985 | 123.86 |

This schedule is sponsored by PNM Witness Larkin

**PUBLIC SERVICE OF NEW MEXICO**
**Base Period Ending June 30th, 2026**

| Class_Factors Line No. | Factor No. | | | Schedule 30 Industrial Power | Schedule 33B Large Service |
|---|---|---|---|---|---|
| 2 | 110 | LA_DISCMTRR | Labor - Distribution-Customer-Meter Reading | 127 | 18 |
| 3 | 111 | LA_DISCBIL | Labor - Distribution-Customer-Billing & Collections | 173 | 25 |
| 4 | 112 | LA_DISCINF | Labor - Distribution-Customer-Service & Info | - | - |
| 5 | 113 | LA_DISCOTH | Labor - Distribution-Customer-Other | 80,080 | 411 |
| 6 | 168 | RBASE_PROD | RBASE - Production-Demand | 45,235,768 | 614,405 |
| 7 | 169 | RBASE_PROEF | RBASE - Production-Energy-Fuel | - | - |
| 8 | 170 | RBASE_PROENF | RBASE - Production-Energy-Non-Fuel | 6,344,144 | 31,399 |
| 9 | 171 | RBASE_STO_PRO_D | RBASE - Storage-Production-Demand | 3,445,565 | 46,799 |
| 10 | 172 | RBASE_STO_TRA_D | RBASE - Storage-Transmission-Demand | 2,471,112 | 35,595 |
| 11 | 173 | RBASE_STO_DIS_DSUB | RBASE - Storage-Distribution-Demand-Subs | 73,502 | - |
| 12 | 174 | RBASE_STO_DIS_DPRI | RBASE - Storage-Distribution-Demand-Primary | - | - |
| 13 | 175 | RBASE_STO_DIS_DSEC | RBASE - Storage-Distribution-Demand-Secondary | - | - |
| 14 | 176 | RBASE_TRAD | RBASE - Transmission-Demand | 26,522,275 | 382,035 |
| 15 | 177 | RBASE_DISDSUB | RBASE - Distribution-Demand-Subs | 11,692,122 | - |
| 16 | 178 | RBASE_DISDPRI | RBASE - Distribution-Demand-Primary | - | - |
| 17 | 179 | RBASE_DISDSEC | RBASE - Distribution-Demand-Secondary | - | - |
| 18 | 180 | RBASE_DISCSRV | RBASE - Distribution-Customer-Services | - | - |
| 19 | 181 | RBASE_DISCMTR | RBASE - Distribution-Customer-Meters | 126,122 | 18,017 |
| 20 | 182 | RBASE_DISCMTRR | RBASE - Distribution-Customer-Meter Reading | 652 | 93 |
| 21 | 183 | RBASE_DISCBIL | RBASE - Distribution-Customer-Billing & Collections | 891 | 127 |
| 22 | 184 | RBASE_DISCINF | RBASE - Distribution-Customer-Service & Info | - | - |
| 23 | 185 | RBASE_DISCOTH | RBASE - Distribution-Customer-Other | 405,015 | 2,085 |
| 24 | 186 | | | | |
| 25 | 187 | | | | |
| 26 | 188 | TOTAL_O&M_PROD | Total O&M Expense - Production-Demand | 5,685,754 | 77,225 |
| 27 | 189 | TOTAL_O&M_PROEF | Total O&M Expense - Production-Energy-Fuel | - | - |
| 28 | 190 | TOTAL_O&M_PROENF | Total O&M Expense - Production-Energy-Non-Fuel | 2,473,815 | 12,244 |
| 29 | 191 | TOTAL_O&M_STO_PRO_D | Total O&M Expense - Storage-Production-Demand | 1,994,809 | 27,094 |
| 30 | 192 | TOTAL_O&M_STO_TRA_D | Total O&M Expense - Storage-Transmission-Demand | 1,918,887 | 27,640 |
| 31 | 193 | TOTAL_O&M_STO_DIS_DSUB | Total O&M Expense - Storage-Distribution-Demand-Subs | 337 | - |
| 32 | 194 | TOTAL_O&M_STO_DIS_DPRI | Total O&M Expense - Storage-Distribution-Demand-Primary | - | - |
| 33 | 195 | TOTAL_O&M_STO_DIS_DSEC | Total O&M Expense - Storage-Distribution-Demand-Secondary | - | - |
| 34 | 196 | TOTAL_O&M_TRAD | Total O&M Expense - Transmission-Demand | 2,528,414 | 36,420 |
| 35 | 197 | TOTAL_O&M_DISDSUB | Total O&M Expense - Distribution-Demand-Subs | 442,941 | - |
| 36 | 198 | TOTAL_O&M_DISDPRI | Total O&M Expense - Distribution-Demand-Primary | - | - |
| 37 | 199 | TOTAL_O&M_DISDSEC | Total O&M Expense - Distribution-Demand-Secondary | - | - |
| 38 | 200 | TOTAL_O&M_DISCSRV | Total O&M Expense - Distribution-Customer-Services | - | - |
| 39 | 201 | TOTAL_O&M_DISCMTR | Total O&M Expense - Distribution-Customer-Meters | 25,357 | 3,622 |
| 40 | 202 | TOTAL_O&M_DISCMTRR | Total O&M Expense - Distribution-Customer-Meter Reading | 433 | 62 |

This schedule is sponsored by PNM Witness Larkin

**PUBLIC SERVICE OF NEW MEXICO**
**Base Period Ending June 30th, 2026**

| Class_Factors Line No. | Factor No. | | | Schedule 35B Lg Power Service | Schedule 36B Special Service Rate |
|---|---|---|---|---|---|
| 2 | 110 | LA_DISCMTRR | Labor - Distribution-Customer-Meter Reading | 63 | 72 |
| 3 | 111 | LA_DISCBIL | Labor - Distribution-Customer-Billing & Collections | 86 | 99 |
| 4 | 112 | LA_DISCINF | Labor - Distribution-Customer-Service & Info | - | - |
| 5 | 113 | LA_DISCOTH | Labor - Distribution-Customer-Other | 19,856 | 55,743 |
| 6 | 168 | RBASE_PROD | RBASE - Production-Demand | 12,532,981 | - |
| 7 | 169 | RBASE_PROEF | RBASE - Production-Energy-Fuel | - | - |
| 8 | 170 | RBASE_PROENF | RBASE - Production-Energy-Non-Fuel | 1,570,886 | 4,417,168 |
| 9 | 171 | RBASE_STO_PRO_D | RBASE - Storage-Production-Demand | 954,625 | - |
| 10 | 172 | RBASE_STO_TRA_D | RBASE - Storage-Transmission-Demand | 659,618 | 6,890,118 |
| 11 | 173 | RBASE_STO_DIS_DSUB | RBASE - Storage-Distribution-Demand-Subs | 22,689 | - |
| 12 | 174 | RBASE_STO_DIS_DPRI | RBASE - Storage-Distribution-Demand-Primary | - | - |
| 13 | 175 | RBASE_STO_DIS_DSEC | RBASE - Storage-Distribution-Demand-Secondary | - | - |
| 14 | 176 | RBASE_TRAD | RBASE - Transmission-Demand | 7,079,635 | 73,951,165 |
| 15 | 177 | RBASE_DISDSUB | RBASE - Distribution-Demand-Subs | 3,609,170 | - |
| 16 | 178 | RBASE_DISDPRI | RBASE - Distribution-Demand-Primary | - | - |
| 17 | 179 | RBASE_DISDSEC | RBASE - Distribution-Demand-Secondary | - | - |
| 18 | 180 | RBASE_DISCSRV | RBASE - Distribution-Customer-Services | - | - |
| 19 | 181 | RBASE_DISCMTR | RBASE - Distribution-Customer-Meters | 63,061 | 72,070 |
| 20 | 182 | RBASE_DISCMTRR | RBASE - Distribution-Customer-Meter Reading | 326 | 373 |
| 21 | 183 | RBASE_DISCBIL | RBASE - Distribution-Customer-Billing & Collections | 446 | 509 |
| 22 | 184 | RBASE_DISCINF | RBASE - Distribution-Customer-Service & Info | - | - |
| 23 | 185 | RBASE_DISCOTH | RBASE - Distribution-Customer-Other | 100,435 | 281,922 |
| 24 | 186 | | | | |
| 25 | 187 | | | | |
| 26 | 188 | TOTAL_O&M_PROD | Total O&M Expense - Production-Demand | 1,575,290 | - |
| 27 | 189 | TOTAL_O&M_PROEF | Total O&M Expense - Production-Energy-Fuel | - | - |
| 28 | 190 | TOTAL_O&M_PROENF | Total O&M Expense - Production-Energy-Non-Fuel | 612,546 | 1,722,416 |
| 29 | 191 | TOTAL_O&M_STO_PRO_D | Total O&M Expense - Storage-Production-Demand | 552,680 | - |
| 30 | 192 | TOTAL_O&M_STO_TRA_D | Total O&M Expense - Storage-Transmission-Demand | 512,212 | 5,350,369 |
| 31 | 193 | TOTAL_O&M_STO_DIS_DSUB | Total O&M Expense - Storage-Distribution-Demand-Subs | 104 | - |
| 32 | 194 | TOTAL_O&M_STO_DIS_DPRI | Total O&M Expense - Storage-Distribution-Demand-Primary | - | - |
| 33 | 195 | TOTAL_O&M_STO_DIS_DSEC | Total O&M Expense - Storage-Distribution-Demand-Secondary | - | - |
| 34 | 196 | TOTAL_O&M_TRAD | Total O&M Expense - Transmission-Demand | 674,914 | 7,049,892 |
| 35 | 197 | TOTAL_O&M_DISDSUB | Total O&M Expense - Distribution-Demand-Subs | 136,729 | - |
| 36 | 198 | TOTAL_O&M_DISDPRI | Total O&M Expense - Distribution-Demand-Primary | - | - |
| 37 | 199 | TOTAL_O&M_DISDSEC | Total O&M Expense - Distribution-Demand-Secondary | - | - |
| 38 | 200 | TOTAL_O&M_DISCSRV | Total O&M Expense - Distribution-Customer-Services | - | - |
| 39 | 201 | TOTAL_O&M_DISCMTR | Total O&M Expense - Distribution-Customer-Meters | 12,679 | 14,490 |
| 40 | 202 | TOTAL_O&M_DISCMTRR | Total O&M Expense - Distribution-Customer-Meter Reading | 217 | 248 |

This schedule is sponsored by PNM Witness Larkin

**PUBLIC SERVICE OF NEW MEXICO**
**Base Period Ending June 30th, 2026**

| Class_Factors Line No. | Factor No. | | | Schedule 6 Priv. Area Light | Schedule 20 Streetlighting |
|---|---|---|---|---|---|
| 2 | 110 | LA_DISCMTRR | Labor - Distribution-Customer-Meter Reading | - | - |
| 3 | 111 | LA_DISCBIL | Labor - Distribution-Customer-Billing & Collections | - | - |
| 4 | 112 | LA_DISCINF | Labor - Distribution-Customer-Service & Info | - | - |
| 5 | 113 | LA_DISCOTH | Labor - Distribution-Customer-Other | 30,810 | 111,799 |
| 6 | 168 | RBASE_PROD | RBASE - Production-Demand | 331,585 | 898,599 |
| 7 | 169 | RBASE_PROEF | RBASE - Production-Energy-Fuel | - | - |
| 8 | 170 | RBASE_PROENF | RBASE - Production-Energy-Non-Fuel | 116,746 | 315,137 |
| 9 | 171 | RBASE_STO_PRO_D | RBASE - Storage-Production-Demand | 25,256 | 68,445 |
| 10 | 172 | RBASE_STO_TRA_D | RBASE - Storage-Transmission-Demand | 48,405 | 127,631 |
| 11 | 173 | RBASE_STO_DIS_DSUB | RBASE - Storage-Distribution-Demand-Subs | 3,509 | 12,007 |
| 12 | 174 | RBASE_STO_DIS_DPRI | RBASE - Storage-Distribution-Demand-Primary | 9,338 | 31,958 |
| 13 | 175 | RBASE_STO_DIS_DSEC | RBASE - Storage-Distribution-Demand-Secondary | - | - |
| 14 | 176 | RBASE_TRAD | RBASE - Transmission-Demand | 519,529 | 1,369,850 |
| 15 | 177 | RBASE_DISDSUB | RBASE - Distribution-Demand-Subs | 558,111 | 1,910,037 |
| 16 | 178 | RBASE_DISDPRI | RBASE - Distribution-Demand-Primary | 1,485,063 | 5,082,366 |
| 17 | 179 | RBASE_DISDSEC | RBASE - Distribution-Demand-Secondary | 767,589 | 2,626,937 |
| 18 | 180 | RBASE_DISCSRV | RBASE - Distribution-Customer-Services | - | - |
| 19 | 181 | RBASE_DISCMTR | RBASE - Distribution-Customer-Meters | - | - |
| 20 | 182 | RBASE_DISCMTRR | RBASE - Distribution-Customer-Meter Reading | - | - |
| 21 | 183 | RBASE_DISCBIL | RBASE - Distribution-Customer-Billing & Collections | - | - |
| 22 | 184 | RBASE_DISCINF | RBASE - Distribution-Customer-Service & Info | - | - |
| 23 | 185 | RBASE_DISCOTH | RBASE - Distribution-Customer-Other | 668,958 | 16,677,141 |
| 24 | 186 | | | | |
| 25 | 187 | | | | |
| 26 | 188 | TOTAL_O&M_PROD | Total O&M Expense - Production-Demand | 41,677 | 112,946 |
| 27 | 189 | TOTAL_O&M_PROEF | Total O&M Expense - Production-Energy-Fuel | - | - |
| 28 | 190 | TOTAL_O&M_PROENF | Total O&M Expense - Production-Energy-Non-Fuel | 45,524 | 122,884 |
| 29 | 191 | TOTAL_O&M_STO_PRO_D | Total O&M Expense - Storage-Production-Demand | 14,622 | 39,626 |
| 30 | 192 | TOTAL_O&M_STO_TRA_D | Total O&M Expense - Storage-Transmission-Demand | 37,588 | 99,109 |
| 31 | 193 | TOTAL_O&M_STO_DIS_DSUB | Total O&M Expense - Storage-Distribution-Demand-Subs | 16 | 55 |
| 32 | 194 | TOTAL_O&M_STO_DIS_DPRI | Total O&M Expense - Storage-Distribution-Demand-Primary | 43 | 147 |
| 33 | 195 | TOTAL_O&M_STO_DIS_DSEC | Total O&M Expense - Storage-Distribution-Demand-Secondary | - | - |
| 34 | 196 | TOTAL_O&M_TRAD | Total O&M Expense - Transmission-Demand | 49,528 | 130,590 |
| 35 | 197 | TOTAL_O&M_DISDSUB | Total O&M Expense - Distribution-Demand-Subs | 21,143 | 72,359 |
| 36 | 198 | TOTAL_O&M_DISDPRI | Total O&M Expense - Distribution-Demand-Primary | 62,724 | 214,663 |
| 37 | 199 | TOTAL_O&M_DISDSEC | Total O&M Expense - Distribution-Demand-Secondary | 32,420 | 110,953 |
| 38 | 200 | TOTAL_O&M_DISCSRV | Total O&M Expense - Distribution-Customer-Services | - | - |
| 39 | 201 | TOTAL_O&M_DISCMTR | Total O&M Expense - Distribution-Customer-Meters | - | - |
| 40 | 202 | TOTAL_O&M_DISCMTRR | Total O&M Expense - Distribution-Customer-Meter Reading | - | - |

This schedule is sponsored by PNM Witness Larkin

**PUBLIC SERVICE OF NEW MEXICO**
**Base Period Ending June 30th, 2026**

| Line No. | Factor No. | Class_Factors | | dule 20-Customer O<br>Streetlighting |
|---|---|---|---|---|
| 2 | 110 | LA_DISCMTRR | Labor - Distribution-Customer-Meter Reading | - |
| 3 | 111 | LA_DISCBIL | Labor - Distribution-Customer-Billing & Collections | - |
| 4 | 112 | LA_DISCINF | Labor - Distribution-Customer-Service & Info | - |
| 5 | 113 | LA_DISCOTH | Labor - Distribution-Customer-Other | 0 |
| 6 | 168 | RBASE_PROD | RBASE - Production-Demand | 0 |
| 7 | 169 | RBASE_PROEF | RBASE - Production-Energy-Fuel | - |
| 8 | 170 | RBASE_PROENF | RBASE - Production-Energy-Non-Fuel | - |
| 9 | 171 | RBASE_STO_PRO_D | RBASE - Storage-Production-Demand | 0 |
| 10 | 172 | RBASE_STO_TRA_D | RBASE - Storage-Transmission-Demand | 0 |
| 11 | 173 | RBASE_STO_DIS_DSUB | RBASE - Storage-Distribution-Demand-Subs | 0 |
| 12 | 174 | RBASE_STO_DIS_DPRI | RBASE - Storage-Distribution-Demand-Primary | 0 |
| 13 | 175 | RBASE_STO_DIS_DSEC | RBASE - Storage-Distribution-Demand-Secondary | - |
| 14 | 176 | RBASE_TRAD | RBASE - Transmission-Demand | 0 |
| 15 | 177 | RBASE_DISDSUB | RBASE - Distribution-Demand-Subs | 0 |
| 16 | 178 | RBASE_DISDPRI | RBASE - Distribution-Demand-Primary | 0 |
| 17 | 179 | RBASE_DISDSEC | RBASE - Distribution-Demand-Secondary | 0 |
| 18 | 180 | RBASE_DISCSRV | RBASE - Distribution-Customer-Services | - |
| 19 | 181 | RBASE_DISCMTR | RBASE - Distribution-Customer-Meters | - |
| 20 | 182 | RBASE_DISCMTRR | RBASE - Distribution-Customer-Meter Reading | - |
| 21 | 183 | RBASE_DISCBIL | RBASE - Distribution-Customer-Billing & Collections | - |
| 22 | 184 | RBASE_DISCINF | RBASE - Distribution-Customer-Service & Info | - |
| 23 | 185 | RBASE_DISCOTH | RBASE - Distribution-Customer-Other | (0) |
| 24 | 186 | | | |
| 25 | 187 | | | |
| 26 | 188 | TOTAL_O&M_PROD | Total O&M Expense - Production-Demand | 0 |
| 27 | 189 | TOTAL_O&M_PROEF | Total O&M Expense - Production-Energy-Fuel | - |
| 28 | 190 | TOTAL_O&M_PROENF | Total O&M Expense - Production-Energy-Non-Fuel | - |
| 29 | 191 | TOTAL_O&M_STO_PRO_D | Total O&M Expense - Storage-Production-Demand | - |
| 30 | 192 | TOTAL_O&M_STO_TRA_D | Total O&M Expense - Storage-Transmission-Demand | - |
| 31 | 193 | TOTAL_O&M_STO_DIS_DSUB | Total O&M Expense - Storage-Distribution-Demand-Subs | - |
| 32 | 194 | TOTAL_O&M_STO_DIS_DPRI | Total O&M Expense - Storage-Distribution-Demand-Primary | - |
| 33 | 195 | TOTAL_O&M_STO_DIS_DSEC | Total O&M Expense - Storage-Distribution-Demand-Secondary | - |
| 34 | 196 | TOTAL_O&M_TRAD | Total O&M Expense - Transmission-Demand | 0 |
| 35 | 197 | TOTAL_O&M_DISDSUB | Total O&M Expense - Distribution-Demand-Subs | 0 |
| 36 | 198 | TOTAL_O&M_DISDPRI | Total O&M Expense - Distribution-Demand-Primary | 0 |
| 37 | 199 | TOTAL_O&M_DISDSEC | Total O&M Expense - Distribution-Demand-Secondary | 0 |
| 38 | 200 | TOTAL_O&M_DISCSRV | Total O&M Expense - Distribution-Customer-Services | - |
| 39 | 201 | TOTAL_O&M_DISCMTR | Total O&M Expense - Distribution-Customer-Meters | - |
| 40 | 202 | TOTAL_O&M_DISCMTRR | Total O&M Expense - Distribution-Customer-Meter Reading | - |

This schedule is sponsored by PNM Witness Larkin

**PUBLIC SERVICE OF NEW MEXICO**
**Base Period Ending June 30th, 2026**

Class_Factors

| Line No. | Factor No. | | | Other Input |
|---|---|---|---|---|
| 41 | 203 | TOTAL_O&M_DISCBIL | Total O&M Expense - Distribution-Customer-Billing & Collections | |
| 42 | 204 | TOTAL_O&M_DISCINF | Total O&M Expense - Distribution-Customer-Service & Info | |
| 43 | 205 | TOTAL_O&M_DISCOTH | Total O&M Expense - Distribution-Customer-Other | |

This schedule is sponsored by PNM Witness Larkin

**PUBLIC SERVICE OF NEW MEXICO**
**Base Period Ending June 30th, 2026**

Class_Factors

Schedule 1

| Line No. | Factor No. | | | PNM Retail | Residential |
|---|---|---|---|---|---|
| 41 | 203 | TOTAL_O&M_DISCBIL | Total O&M Expense - Distribution-Customer-Billing & Collections | 29,762,840 | 26,503,613 |
| 42 | 204 | TOTAL_O&M_DISCINF | Total O&M Expense - Distribution-Customer-Service & Info | - | - |
| 43 | 205 | TOTAL_O&M_DISCOTH | Total O&M Expense - Distribution-Customer-Other | 16,849,932 | 12,584,287 |

This schedule is sponsored by PNM Witness Larkin

**PUBLIC SERVICE OF NEW MEXICO**
**Base Period Ending June 30th, 2026**

| Class_Factors Line No. | Factor No. | | | Schedule 1B Residential | Schedule 2 Small Power |
|---|---|---|---|---|---|
| 41 | 203 | TOTAL_O&M_DISCBIL | Total O&M Expense - Distribution-Customer-Billing & Collections | - | 2,550,359 |
| 42 | 204 | TOTAL_O&M_DISCINF | Total O&M Expense - Distribution-Customer-Service & Info | - | - |
| 43 | 205 | TOTAL_O&M_DISCOTH | Total O&M Expense - Distribution-Customer-Other | 0 | 1,592,097 |

This schedule is sponsored by PNM Witness Larkin

**PUBLIC SERVICE OF NEW MEXICO**
**Base Period Ending June 30th, 2026**

| Class_Factors Line No. | Factor No. | | | Schedule 2B Small Power | Schedule 3B General Power |
|---|---|---|---|---|---|
| 41 | 203 | TOTAL_O&M_DISCBIL | Total O&M Expense - Distribution-Customer-Billing & Collections | - | 471,216 |
| 42 | 204 | TOTAL_O&M_DISCINF | Total O&M Expense - Distribution-Customer-Service & Info | - | - |
| 43 | 205 | TOTAL_O&M_DISCOTH | Total O&M Expense - Distribution-Customer-Other | 0 | 592,420 |

This schedule is sponsored by PNM Witness Larkin

**PUBLIC SERVICE OF NEW MEXICO**
**Base Period Ending June 30th, 2026**

| Line No. | Class_Factors Factor No. | | | Schedule 3C GP Low LF | Schedule 3D General Power Gov |
|---|---|---|---|---|---|
| 41 | 203 | TOTAL_O&M_DISCBIL | Total O&M Expense - Distribution-Customer-Billing & Collections | 197,445 | 7,364 |
| 42 | 204 | TOTAL_O&M_DISCINF | Total O&M Expense - Distribution-Customer-Service & Info | - | - |
| 43 | 205 | TOTAL_O&M_DISCOTH | Total O&M Expense - Distribution-Customer-Other | 147,757 | 41,798 |

This schedule is sponsored by PNM Witness Larkin

**PUBLIC SERVICE OF NEW MEXICO**
**Base Period Ending June 30th, 2026**

| Class_Factors Line No. | Factor No. | | | Schedule 3E GP Low LF Gov |
|---|---|---|---|---|
| 41 | 203 | TOTAL_O&M_DISCBIL | Total O&M Expense - Distribution-Customer-Billing & Collections | 3,047 |
| 42 | 204 | TOTAL_O&M_DISCINF | Total O&M Expense - Distribution-Customer-Service & Info | - |
| 43 | 205 | TOTAL_O&M_DISCOTH | Total O&M Expense - Distribution-Customer-Other | 10,556 |

This schedule is sponsored by PNM Witness Larkin

**PUBLIC SERVICE OF NEW MEXICO**
**Base Period Ending June 30th, 2026**

| Line No. | Class_Factors Factor No. | | | Schedule 3F GP Charging Stations | Schedule 4 Large Power |
|---|---|---|---|---|---|
| 41 | 203 | TOTAL_O&M_DISCBIL | Total O&M Expense - Distribution-Customer-Billing & Collections | 677 | 7,407 |
| 42 | 204 | TOTAL_O&M_DISCINF | Total O&M Expense - Distribution-Customer-Service & Info | - | - |
| 43 | 205 | TOTAL_O&M_DISCOTH | Total O&M Expense - Distribution-Customer-Other | 2,917 | 319,379 |

This schedule is sponsored by PNM Witness Larkin

**PUBLIC SERVICE OF NEW MEXICO**
**Base Period Ending June 30th, 2026**

| Class_Factors Line No. | Factor No. | | | Schedule 5 Industrial Power | Schedule 10 Irrigation |
|---|---|---|---|---|---|
| 41 | 203 | TOTAL_O&M_DISCBIL | Total O&M Expense - Distribution-Customer-Billing & Collections | 42 | 13,374 |
| 42 | 204 | TOTAL_O&M_DISCINF | Total O&M Expense - Distribution-Customer-Service & Info | - | - |
| 43 | 205 | TOTAL_O&M_DISCOTH | Total O&M Expense - Distribution-Customer-Other | 4,449 | 15,882 |

This schedule is sponsored by PNM Witness Larkin

**PUBLIC SERVICE OF NEW MEXICO**
**Base Period Ending June 30th, 2026**

| Class_Factors Line No. | Factor No. | | | Schedule 11 Water & Sewage | Schedule 15 Industrial Power |
|---|---|---|---|---|---|
| 41 | 203 | TOTAL_O&M_DISCBIL | Total O&M Expense - Distribution-Customer-Billing & Collections | 6,814 | 169.29 |
| 42 | 204 | TOTAL_O&M_DISCINF | Total O&M Expense - Distribution-Customer-Service & Info | - | - |
| 43 | 205 | TOTAL_O&M_DISCOTH | Total O&M Expense - Distribution-Customer-Other | 67,962 | 25,595.87 |

This schedule is sponsored by PNM Witness Larkin

**PUBLIC SERVICE OF NEW MEXICO**
**Base Period Ending June 30th, 2026**

| Class_Factors Line No. | Factor No. | | | Schedule 30 Industrial Power | Schedule 33B Large Service |
|---|---|---|---|---|---|
| 41 | 203 | TOTAL_O&M_DISCBIL | Total O&M Expense - Distribution-Customer-Billing & Collections | 593 | 85 |
| 42 | 204 | TOTAL_O&M_DISCINF | Total O&M Expense - Distribution-Customer-Service & Info | - | - |
| 43 | 205 | TOTAL_O&M_DISCOTH | Total O&M Expense - Distribution-Customer-Other | 234,758 | 1,206 |

This schedule is sponsored by PNM Witness Larkin

**PUBLIC SERVICE OF NEW MEXICO**
**Base Period Ending June 30th, 2026**

| Line No. | Class_Factors Factor No. | | | Schedule 35B Lg Power Service | Schedule 36B Special Service Rate |
|---|---|---|---|---|---|
| 41 | 203 | TOTAL_O&M_DISCBIL | Total O&M Expense - Distribution-Customer-Billing & Collections | 296 | 339 |
| 42 | 204 | TOTAL_O&M_DISCINF | Total O&M Expense - Distribution-Customer-Service & Info | - | - |
| 43 | 205 | TOTAL_O&M_DISCOTH | Total O&M Expense - Distribution-Customer-Other | 58,209 | 163,413 |

This schedule is sponsored by PNM Witness Larkin

**PUBLIC SERVICE OF NEW MEXICO**
**Base Period Ending June 30th, 2026**

| Class_Factors Line No. | Factor No. | | | Schedule 6 Priv. Area Light | Schedule 20 Streetlighting |
|---|---|---|---|---|---|
| 41 | 203 | TOTAL_O&M_DISCBIL | Total O&M Expense - Distribution-Customer-Billing & Collections | - | - |
| 42 | 204 | TOTAL_O&M_DISCINF | Total O&M Expense - Distribution-Customer-Service & Info | - | - |
| 43 | 205 | TOTAL_O&M_DISCOTH | Total O&M Expense - Distribution-Customer-Other | 238,893 | 748,354 |

This schedule is sponsored by PNM Witness Larkin

**PUBLIC SERVICE OF NEW MEXICO**
**Base Period Ending June 30th, 2026**

| Class_Factors Line No. | Factor No. | | | dule 20-Customer O' Streetlighting |
|---|---|---|---|---|
| 41 | 203 | TOTAL_O&M_DISCBIL | Total O&M Expense - Distribution-Customer-Billing & Collections | - |
| 42 | 204 | TOTAL_O&M_DISCINF | Total O&M Expense - Distribution-Customer-Service & Info | - |
| 43 | 205 | TOTAL_O&M_DISCOTH | Total O&M Expense - Distribution-Customer-Other | 0 |

This schedule is sponsored by PNM Witness Larkin

**PUBLIC SERVICE OF NEW MEXICO**
**Test Period Ending September 30th, 2028**

| Class_Factors Line No. | Factor No. | | Other Input |
|---|---|---|---|
| 1 | | | |
| 2 | | **INDEPENDENT ALLOCATORS** | |
| 3 | 1 | RH_DEMAND | Risk Hour Demand |
| 4 | 2 | TRANS_12CP | Transmission Demand (based on 12CP) |
| 5 | 3 | NCP | Max Non Coincident Peak |
| 6 | 4 | NCP_SUBS | Max Non Coincident Peak - Substation Level |
| 7 | 5 | NCP_PRI | Max Non Coincident Peak - Primary Level |
| 8 | 6 | NCP_SEC | Max Non Coincident Peak - Secondary Level |
| 9 | 7 | STORAGE_3S1W | 3S1W Demand at Storage Dispatch Peak Hours |
| 10 | 8 | AVGDEMAND | Average Demand |
| 11 | 9 | ENERGY | Energy - kWh at Generation (used for Base Fuel Items) |
| 12 | 10 | ENERGY3 | ANNUAL KWH SALES @ METER (excl 36B) |
| 13 | 11 | ENERGY4 | Energy - kWh at Meter (Non-renewable only) |
| 14 | 12 | FUELREV | Current Fuel Revenues |
| 15 | 13 | REV | Current Non Fuel Revenues |
| 16 | 14 | CUST371 | Installation on Customer Premises - Direct Assignment |
| 17 | 15 | CUST373 | Street Lighting and Signal Systems - Direct Assignment |
| 18 | 16 | CUST_DEP | Customer Deposits |
| 19 | 17 | NFREV | Non-Fuel Revenues |
| 20 | 18 | ST_LIGHTS | Streetlight Energy - kWh at generation |
| 21 | 19 | CUST902 | 902-Meter Reading Expenses |
| 22 | 20 | CUST903 | 903-Customer Records and Collection Expenses |
| 23 | 21 | _EXP904 | Uncollectible Percentages |
| 24 | 22 | WTD_SERV | Customer Weighted Service Costs |
| 25 | 23 | WTD_METE | Customer Weighted Meter Costs |
| 26 | 24 | CUSTS | Annual Number of Customers |
| 27 | 25 | CUSTEXP | Weighted Customer/Energy Allocator |
| 28 | 26 | 36B_Dedicated | Dedicated 36B Allocator |
| 29 | 27 | STORAGE_3S1W | 3S1W Demand at Storage Dispatch Peak Hours Transmission |
| 30 | | | |
| 31 | | **DEPENDENT ALLOCATORS** | |
| 32 | 19 | NP_PRO_DTOT | Net Plant with GI - Production-Demand |
| 33 | 20 | NP_PRO_EFTOT | Net Plant with GI - Production-Energy-Fuel |
| 34 | 21 | NP_PRO_ENFTOT | Net Plant with GI - Production-Energy-Non-Fuel |
| 35 | 22 | NP_STO_PRO_DTOT | Net Plant with GI - Storage-Production-Demand |
| 36 | 23 | NP_STO_TRA_DTOT | Net Plant with GI - Storage-Transmission-Demand |
| 37 | 24 | NP_STO_DIS_DSUBTOT | Net Plant with GI - Storage-Distribution-Demand-Subs |
| 38 | 25 | NP_STO_DIS_DPRITOT | Net Plant with GI - Storage-Distribution-Demand-Primary |

This schedule is sponsored by PNM Witness Larkin

**PUBLIC SERVICE OF NEW MEXICO**
**Test Period Ending September 30th, 2028**

| Class_Factors Line No. | Factor No. | | | PNM Retail | Schedule 1 Residential |
|---|---|---|---|---|---|
| | | | | | 1 |
| 1 | | | | | |
| 2 | | **INDEPENDENT ALLOCATORS** | | | |
| 3 | 1 | RH_DEMAND | Risk Hour Demand | 1.00000 | 0.48544 |
| 4 | 2 | TRANS_12CP | Transmission Demand (based on 12CP) | 1.00000 | 0.37657 |
| 5 | 3 | NCP | Max Non Coincident Peak | 1.00000 | 0.40153 |
| 6 | 4 | NCP_SUBS | Max Non Coincident Peak - Substation Level | 1.00000 | 0.50167 |
| 7 | 5 | NCP_PRI | Max Non Coincident Peak - Primary Level | 1.00000 | 0.53302 |
| 8 | 6 | NCP_SEC | Max Non Coincident Peak - Secondary Level | 1.00000 | 0.59278 |
| 9 | 7 | STORAGE_3S1W | 3S1W Demand at Storage Dispatch Peak Hours | - | - |
| 10 | 8 | AVGDEMAND | Average Demand | 1.00000 | 0.39753 |
| 11 | 9 | ENERGY | Energy - kWh at Generation (used for Base Fuel Items) | 1.00000 | 0.39753 |
| 12 | 10 | ENERGY3 | ANNUAL KWH SALES @ METER (excl 36B) | - | - |
| 13 | 11 | ENERGY4 | Energy - kWh at Meter (Non-renewable only) | 1.00000 | 0.33186 |
| 14 | 12 | FUELREV | Current Fuel Revenues | 1.00000 | 0.33865 |
| 15 | 13 | REV | Current Non Fuel Revenues | 1.00000 | 0.48117 |
| 16 | 14 | CUST371 | Installation on Customer Premises - Direct Assignment | 1.00000 | - |
| 17 | 15 | CUST373 | Street Lighting and Signal Systems - Direct Assignment | 1.00000 | - |
| 18 | 16 | CUST_DEP | Customer Deposits | 1.00000 | 0.85026 |
| 19 | 17 | NFREV | Non-Fuel Revenues | 1.00000 | 0.48117 |
| 20 | 18 | ST_LIGHTS | Streetlight Energy - kWh at generation | 1.00000 | - |
| 21 | 19 | CUST902 | 902-Meter Reading Expenses | 1.00000 | 0.87976 |
| 22 | 20 | CUST903 | 903-Customer Records and Collection Expenses | 1.00000 | 0.87976 |
| 23 | 21 | _EXP904 | Uncollectible Percentages | 1.00000 | 0.85832 |
| 24 | 22 | WTD_SERV | Customer Weighted Service Costs | 1.00000 | 0.91879 |
| 25 | 23 | WTD_METE | Customer Weighted Meter Costs | 1.00000 | 0.69636 |
| 26 | 24 | CUSTS | Annual Number of Customers | 1.00000 | 0.87976 |
| 27 | 25 | CUSTEXP | Weighted Customer/Energy Allocator | 1.00000 | 0.77018 |
| 28 | 26 | 36B_Dedicated | Dedicated 36B Allocator | 1.00000 | - |
| 29 | 27 | STORAGE_3S1W | 3S1W Demand at Storage Dispatch Peak Hours Transmission | - | - |
| 30 | | | | | |
| 31 | | **DEPENDENT ALLOCATORS** | | | |
| 32 | 19 | NP_PRO_DTOT | Net Plant with GI - Production-Demand | 1.00000 | 0.48544 |
| 33 | 20 | NP_PRO_EFTOT | Net Plant with GI - Production-Energy-Fuel | - | - |
| 34 | 21 | NP_PRO_ENFTOT | Net Plant with GI - Production-Energy-Non-Fuel | - | - |
| 35 | 22 | NP_STO_PRO_DTOT | Net Plant with GI - Storage-Production-Demand | 1.00000 | 0.48544 |
| 36 | 23 | NP_STO_TRA_DTOT | Net Plant with GI - Storage-Transmission-Demand | 1.00000 | 0.37657 |
| 37 | 24 | NP_STO_DIS_DSUBTOT | Net Plant with GI - Storage-Distribution-Demand-Subs | 1.00000 | 0.50167 |
| 38 | 25 | NP_STO_DIS_DPRITOT | Net Plant with GI - Storage-Distribution-Demand-Primary | 1.00000 | 0.53302 |

This schedule is sponsored by PNM Witness Larkin

**PUBLIC SERVICE OF NEW MEXICO**
**Test Period Ending September 30th, 2028**

| Class_Factors Line No. | Factor No. | | | Schedule 1B Residential 2 | Schedule 2 Small Power 3 |
|---|---|---|---|---|---|
| 1 | | | | | |
| 2 | | **INDEPENDENT ALLOCATORS** | | | |
| 3 | 1 | RH_DEMAND | Risk Hour Demand | 0.00524 | 0.10730 |
| 4 | 2 | TRANS_12CP | Transmission Demand (based on 12CP) | 0.00400 | 0.08161 |
| 5 | 3 | NCP | Max Non Coincident Peak | 0.00445 | 0.09741 |
| 6 | 4 | NCP_SUBS | Max Non Coincident Peak - Substation Level | 0.00555 | 0.12171 |
| 7 | 5 | NCP_PRI | Max Non Coincident Peak - Primary Level | 0.00590 | 0.12931 |
| 8 | 6 | NCP_SEC | Max Non Coincident Peak - Secondary Level | 0.00656 | 0.14381 |
| 9 | 7 | STORAGE_3S1W | 3S1W Demand at Storage Dispatch Peak Hours | - | - |
| 10 | 8 | AVGDEMAND | Average Demand | 0.00441 | 0.10923 |
| 11 | 9 | ENERGY | Energy - kWh at Generation (used for Base Fuel Items) | 0.00441 | 0.10923 |
| 12 | 10 | ENERGY3 | ANNUAL KWH SALES @ METER (excl 36B) | - | - |
| 13 | 11 | ENERGY4 | Energy - kWh at Meter (Non-renewable only) | 0.00367 | 0.09329 |
| 14 | 12 | FUELREV | Current Fuel Revenues | 0.00705 | 0.09548 |
| 15 | 13 | REV | Current Non Fuel Revenues | 0.00980 | 0.11651 |
| 16 | 14 | CUST371 | Installation on Customer Premises - Direct Assignment | - | - |
| 17 | 15 | CUST373 | Street Lighting and Signal Systems - Direct Assignment | - | - |
| 18 | 16 | CUST_DEP | Customer Deposits | 0.01731 | 0.05437 |
| 19 | 17 | NFREV | Non-Fuel Revenues | 0.00980 | 0.11651 |
| 20 | 18 | ST_LIGHTS | Streetlight Energy - kWh at generation | - | - |
| 21 | 19 | CUST902 | 902-Meter Reading Expenses | 0.01418 | 0.09645 |
| 22 | 20 | CUST903 | 903-Customer Records and Collection Expenses | 0.01418 | 0.09645 |
| 23 | 21 | _EXP904 | Uncollectible Percentages | 0.01747 | 0.04113 |
| 24 | 22 | WTD_SERV | Customer Weighted Service Costs | 0.01481 | 0.06577 |
| 25 | 23 | WTD_METE | Customer Weighted Meter Costs | 0.01123 | 0.19418 |
| 26 | 24 | CUSTS | Annual Number of Customers | 0.01418 | 0.09645 |
| 27 | 25 | CUSTEXP | Weighted Customer/Energy Allocator | 0.01208 | 0.09582 |
| 28 | 26 | 36B_Dedicated | Dedicated 36B Allocator | - | - |
| 29 | 27 | STORAGE_3S1W | 3S1W Demand at Storage Dispatch Peak Hours Transmission | - | - |
| 30 | | | | | |
| 31 | | **DEPENDENT ALLOCATORS** | | | |
| 32 | 19 | NP_PRO_DTOT | Net Plant with GI - Production-Demand | 0.00524 | 0.10730 |
| 33 | 20 | NP_PRO_EFTOT | Net Plant with GI - Production-Energy-Fuel | - | - |
| 34 | 21 | NP_PRO_ENFTOT | Net Plant with GI - Production-Energy-Non-Fuel | - | - |
| 35 | 22 | NP_STO_PRO_DTOT | Net Plant with GI - Storage-Production-Demand | 0.00524 | 0.10730 |
| 36 | 23 | NP_STO_TRA_DTOT | Net Plant with GI - Storage-Transmission-Demand | 0.00400 | 0.08161 |
| 37 | 24 | NP_STO_DIS_DSUBTOT | Net Plant with GI - Storage-Distribution-Demand-Subs | 0.00555 | 0.12171 |
| 38 | 25 | NP_STO_DIS_DPRITOT | Net Plant with GI - Storage-Distribution-Demand-Primary | 0.00590 | 0.12931 |

This schedule is sponsored by PNM Witness Larkin

**PUBLIC SERVICE OF NEW MEXICO**
**Test Period Ending September 30th, 2028**

| Line No. | Class_Factors Factor No. | | | Schedule 2B Small Power 4 | Schedule 3B General Power 5 |
|---|---|---|---|---|---|
| 1 | | | | | |
| 2 | | **INDEPENDENT ALLOCATORS** | | | |
| 3 | 1 | RH_DEMAND | Risk Hour Demand | 0.00141 | 0.15830 |
| 4 | 2 | TRANS_12CP | Transmission Demand (based on 12CP) | 0.00087 | 0.12203 |
| 5 | 3 | NCP | Max Non Coincident Peak | 0.00129 | 0.11624 |
| 6 | 4 | NCP_SUBS | Max Non Coincident Peak - Substation Level | 0.00161 | 0.14523 |
| 7 | 5 | NCP_PRI | Max Non Coincident Peak - Primary Level | 0.00171 | 0.15431 |
| 8 | 6 | NCP_SEC | Max Non Coincident Peak - Secondary Level | 0.00191 | 0.17161 |
| 9 | 7 | STORAGE_3S1W | 3S1W Demand at Storage Dispatch Peak Hours | - | - |
| 10 | 8 | AVGDEMAND | Average Demand | 0.00152 | 0.16679 |
| 11 | 9 | ENERGY | Energy - kWh at Generation (used for Base Fuel Items) | 0.00152 | 0.16679 |
| 12 | 10 | ENERGY3 | ANNUAL KWH SALES @ METER (excl 36B) | - | - |
| 13 | 11 | ENERGY4 | Energy - kWh at Meter (Non-renewable only) | 0.00130 | 0.14124 |
| 14 | 12 | FUELREV | Current Fuel Revenues | 0.00204 | 0.14559 |
| 15 | 13 | REV | Current Non Fuel Revenues | 0.00229 | 0.13072 |
| 16 | 14 | CUST371 | Installation on Customer Premises - Direct Assignment | - | - |
| 17 | 15 | CUST373 | Street Lighting and Signal Systems - Direct Assignment | - | - |
| 18 | 16 | CUST_DEP | Customer Deposits | 0.00107 | 0.05506 |
| 19 | 17 | NFREV | Non-Fuel Revenues | 0.00229 | 0.13072 |
| 20 | 18 | ST_LIGHTS | Streetlight Energy - kWh at generation | - | - |
| 21 | 19 | CUST902 | 902-Meter Reading Expenses | 0.00091 | 0.00493 |
| 22 | 20 | CUST903 | 903-Customer Records and Collection Expenses | 0.00091 | 0.00493 |
| 23 | 21 | _EXP904 | Uncollectible Percentages | 0.00081 | 0.04165 |
| 24 | 22 | WTD_SERV | Customer Weighted Service Costs | 0.00062 | - |
| 25 | 23 | WTD_METE | Customer Weighted Meter Costs | 0.00184 | 0.04395 |
| 26 | 24 | CUSTS | Annual Number of Customers | 0.00091 | 0.00493 |
| 27 | 25 | CUSTEXP | Weighted Customer/Energy Allocator | 0.00099 | 0.03220 |
| 28 | 26 | 36B_Dedicated | Dedicated 36B Allocator | - | - |
| 29 | 27 | STORAGE_3S1W | 3S1W Demand at Storage Dispatch Peak Hours Transmission | - | - |
| 30 | | | | | |
| 31 | | **DEPENDENT ALLOCATORS** | | | |
| 32 | 19 | NP_PRO_DTOT | Net Plant with GI - Production-Demand | 0.00141 | 0.15830 |
| 33 | 20 | NP_PRO_EFTOT | Net Plant with GI - Production-Energy-Fuel | - | - |
| 34 | 21 | NP_PRO_ENFTOT | Net Plant with GI - Production-Energy-Non-Fuel | - | - |
| 35 | 22 | NP_STO_PRO_DTOT | Net Plant with GI - Storage-Production-Demand | 0.00141 | 0.15830 |
| 36 | 23 | NP_STO_TRA_DTOT | Net Plant with GI - Storage-Transmission-Demand | 0.00087 | 0.12203 |
| 37 | 24 | NP_STO_DIS_DSUBTOT | Net Plant with GI - Storage-Distribution-Demand-Subs | 0.00161 | 0.14523 |
| 38 | 25 | NP_STO_DIS_DPRITOT | Net Plant with GI - Storage-Distribution-Demand-Primary | 0.00171 | 0.15431 |

This schedule is sponsored by PNM Witness Larkin

**PUBLIC SERVICE OF NEW MEXICO**
**Test Period Ending September 30th, 2028**

| Class_Factors Line No. | Factor No. | | | Schedule 3C GP Low LF 6 | Schedule 3D General Power Gov 7 |
|---|---|---|---|---|---|
| 1 | | | | | |
| 2 | | **INDEPENDENT ALLOCATORS** | | | |
| 3 | 1 | RH_DEMAND | Risk Hour Demand | 0.03644 | 0.01104 |
| 4 | 2 | TRANS_12CP | Transmission Demand (based on 12CP) | 0.02615 | 0.00874 |
| 5 | 3 | NCP | Max Non Coincident Peak | 0.03648 | 0.00833 |
| 6 | 4 | NCP_SUBS | Max Non Coincident Peak - Substation Level | 0.04558 | 0.01041 |
| 7 | 5 | NCP_PRI | Max Non Coincident Peak - Primary Level | 0.04843 | 0.01106 |
| 8 | 6 | NCP_SEC | Max Non Coincident Peak - Secondary Level | 0.05386 | 0.01230 |
| 9 | 7 | STORAGE_3S1W | 3S1W Demand at Storage Dispatch Peak Hours | - | - |
| 10 | 8 | AVGDEMAND | Average Demand | 0.04115 | 0.01278 |
| 11 | 9 | ENERGY | Energy - kWh at Generation (used for Base Fuel Items) | 0.04115 | 0.01278 |
| 12 | 10 | ENERGY3 | ANNUAL KWH SALES @ METER (excl 36B) | - | - |
| 13 | 11 | ENERGY4 | Energy - kWh at Meter (Non-renewable only) | 0.03551 | 0.01077 |
| 14 | 12 | FUELREV | Current Fuel Revenues | 0.03668 | 0.01108 |
| 15 | 13 | REV | Current Non Fuel Revenues | 0.03951 | 0.00914 |
| 16 | 14 | CUST371 | Installation on Customer Premises - Direct Assignment | - | - |
| 17 | 15 | CUST373 | Street Lighting and Signal Systems - Direct Assignment | - | - |
| 18 | 16 | CUST_DEP | Customer Deposits | 0.01664 | 0.00385 |
| 19 | 17 | NFREV | Non-Fuel Revenues | 0.03951 | 0.00914 |
| 20 | 18 | ST_LIGHTS | Streetlight Energy - kWh at generation | - | - |
| 21 | 19 | CUST902 | 902-Meter Reading Expenses | 0.00223 | 0.00029 |
| 22 | 20 | CUST903 | 903-Customer Records and Collection Expenses | 0.00223 | 0.00029 |
| 23 | 21 | _EXP904 | Uncollectible Percentages | 0.01259 | 0.00291 |
| 24 | 22 | WTD_SERV | Customer Weighted Service Costs | - | - |
| 25 | 23 | WTD_METE | Customer Weighted Meter Costs | 0.01987 | 0.00261 |
| 26 | 24 | CUSTS | Annual Number of Customers | 0.00223 | 0.00029 |
| 27 | 25 | CUSTEXP | Weighted Customer/Energy Allocator | 0.00889 | 0.00239 |
| 28 | 26 | 36B_Dedicated | Dedicated 36B Allocator | - | - |
| 29 | 27 | STORAGE_3S1W | 3S1W Demand at Storage Dispatch Peak Hours Transmission | - | - |
| 30 | | | | | |
| 31 | | **DEPENDENT ALLOCATORS** | | | |
| 32 | 19 | NP_PRO_DTOT | Net Plant with GI - Production-Demand | 0.03644 | 0.01104 |
| 33 | 20 | NP_PRO_EFTOT | Net Plant with GI - Production-Energy-Fuel | - | - |
| 34 | 21 | NP_PRO_ENFTOT | Net Plant with GI - Production-Energy-Non-Fuel | - | - |
| 35 | 22 | NP_STO_PRO_DTOT | Net Plant with GI - Storage-Production-Demand | 0.03644 | 0.01104 |
| 36 | 23 | NP_STO_TRA_DTOT | Net Plant with GI - Storage-Transmission-Demand | 0.02615 | 0.00874 |
| 37 | 24 | NP_STO_DIS_DSUBTOT | Net Plant with GI - Storage-Distribution-Demand-Subs | 0.04558 | 0.01041 |
| 38 | 25 | NP_STO_DIS_DPRITOT | Net Plant with GI - Storage-Distribution-Demand-Primary | 0.04843 | 0.01106 |

This schedule is sponsored by PNM Witness Larkin

**PUBLIC SERVICE OF NEW MEXICO**
**Test Period Ending September 30th, 2028**

| Class_Factors Line No. | Factor No. | | | Schedule 3E GP Low LF Gov 8 |
|---|---|---|---|---|
| 1 | | | | |
| 2 | | **INDEPENDENT ALLOCATORS** | | |
| 3 | 1 | RH_DEMAND | Risk Hour Demand | 0.00233 |
| 4 | 2 | TRANS_12CP | Transmission Demand (based on 12CP) | 0.00180 |
| 5 | 3 | NCP | Max Non Coincident Peak | 0.00236 |
| 6 | 4 | NCP_SUBS | Max Non Coincident Peak - Substation Level | 0.00294 |
| 7 | 5 | NCP_PRI | Max Non Coincident Peak - Primary Level | 0.00313 |
| 8 | 6 | NCP_SEC | Max Non Coincident Peak - Secondary Level | 0.00348 |
| 9 | 7 | STORAGE_3S1W | 3S1W Demand at Storage Dispatch Peak Hours | - |
| 10 | 8 | AVGDEMAND | Average Demand | 0.00269 |
| 11 | 9 | ENERGY | Energy - kWh at Generation (used for Base Fuel Items) | 0.00269 |
| 12 | 10 | ENERGY3 | ANNUAL KWH SALES @ METER (excl 36B) | - |
| 13 | 11 | ENERGY4 | Energy - kWh at Meter (Non-renewable only) | 0.00227 |
| 14 | 12 | FUELREV | Current Fuel Revenues | 0.00234 |
| 15 | 13 | REV | Current Non Fuel Revenues | 0.00244 |
| 16 | 14 | CUST371 | Installation on Customer Premises - Direct Assignment | - |
| 17 | 15 | CUST373 | Street Lighting and Signal Systems - Direct Assignment | - |
| 18 | 16 | CUST_DEP | Customer Deposits | 0.00103 |
| 19 | 17 | NFREV | Non-Fuel Revenues | 0.00244 |
| 20 | 18 | ST_LIGHTS | Streetlight Energy - kWh at generation | - |
| 21 | 19 | CUST902 | 902-Meter Reading Expenses | 0.00013 |
| 22 | 20 | CUST903 | 903-Customer Records and Collection Expenses | 0.00013 |
| 23 | 21 | _EXP904 | Uncollectible Percentages | 0.00078 |
| 24 | 22 | WTD_SERV | Customer Weighted Service Costs | - |
| 25 | 23 | WTD_METE | Customer Weighted Meter Costs | 0.00114 |
| 26 | 24 | CUSTS | Annual Number of Customers | 0.00013 |
| 27 | 25 | CUSTEXP | Weighted Customer/Energy Allocator | 0.00056 |
| 28 | 26 | 36B_Dedicated | Dedicated 36B Allocator | - |
| 29 | 27 | STORAGE_3S1W | 3S1W Demand at Storage Dispatch Peak Hours Transmission | - |
| 30 | | | | |
| 31 | | **DEPENDENT ALLOCATORS** | | |
| 32 | 19 | NP_PRO_DTOT | Net Plant with GI - Production-Demand | 0.00233 |
| 33 | 20 | NP_PRO_EFTOT | Net Plant with GI - Production-Energy-Fuel | - |
| 34 | 21 | NP_PRO_ENFTOT | Net Plant with GI - Production-Energy-Non-Fuel | - |
| 35 | 22 | NP_STO_PRO_DTOT | Net Plant with GI - Storage-Production-Demand | 0.00233 |
| 36 | 23 | NP_STO_TRA_DTOT | Net Plant with GI - Storage-Transmission-Demand | 0.00180 |
| 37 | 24 | NP_STO_DIS_DSUBTOT | Net Plant with GI - Storage-Distribution-Demand-Subs | 0.00294 |
| 38 | 25 | NP_STO_DIS_DPRITOT | Net Plant with GI - Storage-Distribution-Demand-Primary | 0.00313 |

This schedule is sponsored by PNM Witness Larkin

**PUBLIC SERVICE OF NEW MEXICO**
**Test Period Ending September 30th, 2028**

| Class_Factors Line No. | Factor No. | | | Schedule 3F GP Charging Stations 9 | Schedule 4 Large Power 10 |
|---|---|---|---|---|---|
| 1 | | | | | |
| 2 | | **INDEPENDENT ALLOCATORS** | | | |
| 3 | 1 | RH_DEMAND | Risk Hour Demand | 0.00091 | 0.09341 |
| 4 | 2 | TRANS_12CP | Transmission Demand (based on 12CP) | 0.00066 | 0.07136 |
| 5 | 3 | NCP | Max Non Coincident Peak | 0.00157 | 0.06048 |
| 6 | 4 | NCP_SUBS | Max Non Coincident Peak - Substation Level | 0.00196 | 0.07557 |
| 7 | 5 | NCP_PRI | Max Non Coincident Peak - Primary Level | 0.00208 | 0.08029 |
| 8 | 6 | NCP_SEC | Max Non Coincident Peak - Secondary Level | 0.00231 | - |
| 9 | 7 | STORAGE_3S1W | 3S1W Demand at Storage Dispatch Peak Hours | - | - |
| 10 | 8 | AVGDEMAND | Average Demand | 0.00110 | 0.11289 |
| 11 | 9 | ENERGY | Energy - kWh at Generation (used for Base Fuel Items) | 0.00110 | 0.11289 |
| 12 | 10 | ENERGY3 | ANNUAL KWH SALES @ METER (excl 36B) | - | - |
| 13 | 11 | ENERGY4 | Energy - kWh at Meter (Non-renewable only) | 0.00099 | 0.09886 |
| 14 | 12 | FUELREV | Current Fuel Revenues | 0.00102 | 0.09971 |
| 15 | 13 | REV | Current Non Fuel Revenues | 0.00100 | 0.07124 |
| 16 | 14 | CUST371 | Installation on Customer Premises - Direct Assignment | - | - |
| 17 | 15 | CUST373 | Street Lighting and Signal Systems - Direct Assignment | - | - |
| 18 | 16 | CUST_DEP | Customer Deposits | 0.00042 | - |
| 19 | 17 | NFREV | Non-Fuel Revenues | 0.00100 | 0.07124 |
| 20 | 18 | ST_LIGHTS | Streetlight Energy - kWh at generation | - | - |
| 21 | 19 | CUST902 | 902-Meter Reading Expenses | 0.00004 | 0.00028 |
| 22 | 20 | CUST903 | 903-Customer Records and Collection Expenses | 0.00004 | 0.00028 |
| 23 | 21 | _EXP904 | Uncollectible Percentages | 0.00032 | 0.02402 |
| 24 | 22 | WTD_SERV | Customer Weighted Service Costs | - | - |
| 25 | 23 | WTD_METE | Customer Weighted Meter Costs | 0.00035 | 0.01283 |
| 26 | 24 | CUSTS | Annual Number of Customers | 0.00004 | 0.00028 |
| 27 | 25 | CUSTEXP | Weighted Customer/Energy Allocator | 0.00023 | 0.01999 |
| 28 | 26 | 36B_Dedicated | Dedicated 36B Allocator | - | - |
| 29 | 27 | STORAGE_3S1W | 3S1W Demand at Storage Dispatch Peak Hours Transmission | - | - |
| 30 | | | | | |
| 31 | | **DEPENDENT ALLOCATORS** | | | |
| 32 | 19 | NP_PRO_DTOT | Net Plant with GI - Production-Demand | 0.00091 | 0.09341 |
| 33 | 20 | NP_PRO_EFTOT | Net Plant with GI - Production-Energy-Fuel | - | - |
| 34 | 21 | NP_PRO_ENFTOT | Net Plant with GI - Production-Energy-Non-Fuel | - | - |
| 35 | 22 | NP_STO_PRO_DTOT | Net Plant with GI - Storage-Production-Demand | 0.00091 | 0.09341 |
| 36 | 23 | NP_STO_TRA_DTOT | Net Plant with GI - Storage-Transmission-Demand | 0.00066 | 0.07136 |
| 37 | 24 | NP_STO_DIS_DSUBTOT | Net Plant with GI - Storage-Distribution-Demand-Subs | 0.00196 | 0.07557 |
| 38 | 25 | NP_STO_DIS_DPRITOT | Net Plant with GI - Storage-Distribution-Demand-Primary | 0.00208 | 0.08029 |

This schedule is sponsored by PNM Witness Larkin

**PUBLIC SERVICE OF NEW MEXICO**
**Test Period Ending September 30th, 2028**

| Class_Factors Line No. | Factor No. | | | Schedule 5 Industrial Power 11 | Schedule 10 Irrigation 12 |
|---|---|---|---|---|---|
| 1 | | | | | |
| 2 | | **INDEPENDENT ALLOCATORS** | | | |
| 3 | 1 | RH_DEMAND | Risk Hour Demand | - | 0.00247 |
| 4 | 2 | TRANS_12CP | Transmission Demand (based on 12CP) | - | 0.00170 |
| 5 | 3 | NCP | Max Non Coincident Peak | - | 0.00241 |
| 6 | 4 | NCP_SUBS | Max Non Coincident Peak - Substation Level | - | 0.00301 |
| 7 | 5 | NCP_PRI | Max Non Coincident Peak - Primary Level | - | 0.00320 |
| 8 | 6 | NCP_SEC | Max Non Coincident Peak - Secondary Level | - | 0.00355 |
| 9 | 7 | STORAGE_3S1W | 3S1W Demand at Storage Dispatch Peak Hours | - | - |
| 10 | 8 | AVGDEMAND | Average Demand | - | 0.00286 |
| 11 | 9 | ENERGY | Energy - kWh at Generation (used for Base Fuel Items) | - | 0.00286 |
| 12 | 10 | ENERGY3 | ANNUAL KWH SALES @ METER (excl 36B) | - | - |
| 13 | 11 | ENERGY4 | Energy - kWh at Meter (Non-renewable only) | - | 0.00243 |
| 14 | 12 | FUELREV | Current Fuel Revenues | - | 0.00249 |
| 15 | 13 | REV | Current Non Fuel Revenues | - | 0.00240 |
| 16 | 14 | CUST371 | Installation on Customer Premises - Direct Assignment | - | - |
| 17 | 15 | CUST373 | Street Lighting and Signal Systems - Direct Assignment | - | - |
| 18 | 16 | CUST_DEP | Customer Deposits | - | - |
| 19 | 17 | NFREV | Non-Fuel Revenues | - | 0.00240 |
| 20 | 18 | ST_LIGHTS | Streetlight Energy - kWh at generation | - | - |
| 21 | 19 | CUST902 | 902-Meter Reading Expenses | - | 0.00055 |
| 22 | 20 | CUST903 | 903-Customer Records and Collection Expenses | - | 0.00055 |
| 23 | 21 | _EXP904 | Uncollectible Percentages | - | - |
| 24 | 22 | WTD_SERV | Customer Weighted Service Costs | - | - |
| 25 | 23 | WTD_METE | Customer Weighted Meter Costs | - | 0.00492 |
| 26 | 24 | CUSTS | Annual Number of Customers | - | 0.00055 |
| 27 | 25 | CUSTEXP | Weighted Customer/Energy Allocator | - | 0.00093 |
| 28 | 26 | 36B_Dedicated | Dedicated 36B Allocator | - | - |
| 29 | 27 | STORAGE_3S1W | 3S1W Demand at Storage Dispatch Peak Hours Transmission | - | - |
| 30 | | | | | |
| 31 | | **DEPENDENT ALLOCATORS** | | | |
| 32 | 19 | NP_PRO_DTOT | Net Plant with GI - Production-Demand | - | 0.00247 |
| 33 | 20 | NP_PRO_EFTOT | Net Plant with GI - Production-Energy-Fuel | - | - |
| 34 | 21 | NP_PRO_ENFTOT | Net Plant with GI - Production-Energy-Non-Fuel | - | - |
| 35 | 22 | NP_STO_PRO_DTOT | Net Plant with GI - Storage-Production-Demand | - | 0.00247 |
| 36 | 23 | NP_STO_TRA_DTOT | Net Plant with GI - Storage-Transmission-Demand | - | 0.00170 |
| 37 | 24 | NP_STO_DIS_DSUBTOT | Net Plant with GI - Storage-Distribution-Demand-Subs | - | 0.00301 |
| 38 | 25 | NP_STO_DIS_DPRITOT | Net Plant with GI - Storage-Distribution-Demand-Primary | - | 0.00320 |

This schedule is sponsored by PNM Witness Larkin

**PUBLIC SERVICE OF NEW MEXICO**
**Test Period Ending September 30th, 2028**

| Class_Factors Line No. | Factor No. | | | Schedule 11 Water & Sewage 13 | Schedule 15 Industrial Power 14 |
|---|---|---|---|---|---|
| 1 | | | | | |
| 2 | | **INDEPENDENT ALLOCATORS** | | | |
| 3 | 1 | RH_DEMAND | Risk Hour Demand | 0.00720 | 0.01 |
| 4 | 2 | TRANS_12CP | Transmission Demand (based on 12CP) | 0.00667 | 0.00 |
| 5 | 3 | NCP | Max Non Coincident Peak | 0.01546 | 0.01 |
| 6 | 4 | NCP_SUBS | Max Non Coincident Peak - Substation Level | 0.01931 | - |
| 7 | 5 | NCP_PRI | Max Non Coincident Peak - Primary Level | 0.02052 | - |
| 8 | 6 | NCP_SEC | Max Non Coincident Peak - Secondary Level | - | - |
| 9 | 7 | STORAGE_3S1W | 3S1W Demand at Storage Dispatch Peak Hours | - | - |
| 10 | 8 | AVGDEMAND | Average Demand | 0.01886 | 0.01 |
| 11 | 9 | ENERGY | Energy - kWh at Generation (used for Base Fuel Items) | 0.01886 | 0.01 |
| 12 | 10 | ENERGY3 | ANNUAL KWH SALES @ METER (excl 36B) | - | - |
| 13 | 11 | ENERGY4 | Energy - kWh at Meter (Non-renewable only) | 0.01653 | 0.01 |
| 14 | 12 | FUELREV | Current Fuel Revenues | 0.01663 | 0.01 |
| 15 | 13 | REV | Current Non Fuel Revenues | 0.00853 | 0.00 |
| 16 | 14 | CUST371 | Installation on Customer Premises - Direct Assignment | - | - |
| 17 | 15 | CUST373 | Street Lighting and Signal Systems - Direct Assignment | - | - |
| 18 | 16 | CUST_DEP | Customer Deposits | - | - |
| 19 | 17 | NFREV | Non-Fuel Revenues | 0.00853 | 0.00 |
| 20 | 18 | ST_LIGHTS | Streetlight Energy - kWh at generation | - | - |
| 21 | 19 | CUST902 | 902-Meter Reading Expenses | 0.00020 | 0.00 |
| 22 | 20 | CUST903 | 903-Customer Records and Collection Expenses | 0.00020 | 0.00 |
| 23 | 21 | _EXP904 | Uncollectible Percentages | - | - |
| 24 | 22 | WTD_SERV | Customer Weighted Service Costs | - | - |
| 25 | 23 | WTD_METE | Customer Weighted Meter Costs | 0.00927 | 0.00 |
| 26 | 24 | CUSTS | Annual Number of Customers | 0.00020 | 0.00 |
| 27 | 25 | CUSTEXP | Weighted Customer/Energy Allocator | 0.00347 | 0.00 |
| 28 | 26 | 36B_Dedicated | Dedicated 36B Allocator | - | - |
| 29 | 27 | STORAGE_3S1W | 3S1W Demand at Storage Dispatch Peak Hours Transmission | - | - |
| 30 | | | | | |
| 31 | | **DEPENDENT ALLOCATORS** | | | |
| 32 | 19 | NP_PRO_DTOT | Net Plant with GI - Production-Demand | 0.00720 | 0.01 |
| 33 | 20 | NP_PRO_EFTOT | Net Plant with GI - Production-Energy-Fuel | - | - |
| 34 | 21 | NP_PRO_ENFTOT | Net Plant with GI - Production-Energy-Non-Fuel | - | - |
| 35 | 22 | NP_STO_PRO_DTOT | Net Plant with GI - Storage-Production-Demand | 0.00720 | 0.01 |
| 36 | 23 | NP_STO_TRA_DTOT | Net Plant with GI - Storage-Transmission-Demand | 0.00667 | 0.00 |
| 37 | 24 | NP_STO_DIS_DSUBTOT | Net Plant with GI - Storage-Distribution-Demand-Subs | 0.01931 | - |
| 38 | 25 | NP_STO_DIS_DPRITOT | Net Plant with GI - Storage-Distribution-Demand-Primary | 0.02052 | - |

This schedule is sponsored by PNM Witness Larkin

**PUBLIC SERVICE OF NEW MEXICO**
**Test Period Ending September 30th, 2028**

| Class_Factors Line No. | Factor No. | | | Schedule 30 Industrial Power 15 | Schedule 33B Large Service 16 |
|---|---|---|---|---|---|
| 1 | | | | | |
| 2 | | **INDEPENDENT ALLOCATORS** | | | |
| 3 | 1 | RH_DEMAND | Risk Hour Demand | 0.05697 | 0.00071 |
| 4 | 2 | TRANS_12CP | Transmission Demand (based on 12CP) | 0.04397 | 0.00064 |
| 5 | 3 | NCP | Max Non Coincident Peak | 0.03215 | 0.00168 |
| 6 | 4 | NCP_SUBS | Max Non Coincident Peak - Substation Level | 0.04017 | - |
| 7 | 5 | NCP_PRI | Max Non Coincident Peak - Primary Level | - | - |
| 8 | 6 | NCP_SEC | Max Non Coincident Peak - Secondary Level | - | - |
| 9 | 7 | STORAGE_3S1W | 3S1W Demand at Storage Dispatch Peak Hours | - | - |
| 10 | 8 | AVGDEMAND | Average Demand | 0.08003 | 0.00147 |
| 11 | 9 | ENERGY | Energy - kWh at Generation (used for Base Fuel Items) | 0.08003 | 0.00147 |
| 12 | 10 | ENERGY3 | ANNUAL KWH SALES @ METER (excl 36B) | - | - |
| 13 | 11 | ENERGY4 | Energy - kWh at Meter (Non-renewable only) | 0.07212 | 0.00134 |
| 14 | 12 | FUELREV | Current Fuel Revenues | 0.07161 | 0.00104 |
| 15 | 13 | REV | Current Non Fuel Revenues | 0.03402 | 0.00142 |
| 16 | 14 | CUST371 | Installation on Customer Premises - Direct Assignment | - | - |
| 17 | 15 | CUST373 | Street Lighting and Signal Systems - Direct Assignment | - | - |
| 18 | 16 | CUST_DEP | Customer Deposits | - | - |
| 19 | 17 | NFREV | Non-Fuel Revenues | 0.03402 | 0.00142 |
| 20 | 18 | ST_LIGHTS | Streetlight Energy - kWh at generation | - | - |
| 21 | 19 | CUST902 | 902-Meter Reading Expenses | 0.00000 | 0.00002 |
| 22 | 20 | CUST903 | 903-Customer Records and Collection Expenses | 0.00000 | 0.00002 |
| 23 | 21 | _EXP904 | Uncollectible Percentages | - | - |
| 24 | 22 | WTD_SERV | Customer Weighted Service Costs | - | - |
| 25 | 23 | WTD_METE | Customer Weighted Meter Costs | 0.00008 | 0.00081 |
| 26 | 24 | CUSTS | Annual Number of Customers | 0.00000 | 0.00002 |
| 27 | 25 | CUSTEXP | Weighted Customer/Energy Allocator | 0.01443 | 0.00028 |
| 28 | 26 | 36B_Dedicated | Dedicated 36B Allocator | - | - |
| 29 | 27 | STORAGE_3S1W | 3S1W Demand at Storage Dispatch Peak Hours Transmission | - | - |
| 30 | | | | | |
| 31 | | **DEPENDENT ALLOCATORS** | | | |
| 32 | 19 | NP_PRO_DTOT | Net Plant with GI - Production-Demand | 0.05697 | 0.00071 |
| 33 | 20 | NP_PRO_EFTOT | Net Plant with GI - Production-Energy-Fuel | - | - |
| 34 | 21 | NP_PRO_ENFTOT | Net Plant with GI - Production-Energy-Non-Fuel | - | - |
| 35 | 22 | NP_STO_PRO_DTOT | Net Plant with GI - Storage-Production-Demand | 0.05697 | 0.00071 |
| 36 | 23 | NP_STO_TRA_DTOT | Net Plant with GI - Storage-Transmission-Demand | 0.04397 | 0.00064 |
| 37 | 24 | NP_STO_DIS_DSUBTOT | Net Plant with GI - Storage-Distribution-Demand-Subs | 0.04017 | - |
| 38 | 25 | NP_STO_DIS_DPRITOT | Net Plant with GI - Storage-Distribution-Demand-Primary | - | - |

This schedule is sponsored by PNM Witness Larkin

**PUBLIC SERVICE OF NEW MEXICO**
**Test Period Ending September 30th, 2028**

| Class_Factors Line No. | Factor No. | | | Schedule 35B Lg Power Service 17 | Schedule 36B Special Service Rate 18 |
|---|---|---|---|---|---|
| 1 | | | | | |
| 2 | | **INDEPENDENT ALLOCATORS** | | | |
| 3 | 1 | RH_DEMAND | Risk Hour Demand | 0.02397 | - |
| 4 | 2 | TRANS_12CP | Transmission Demand (based on 12CP) | 0.01832 | 0.22744 |
| 5 | 3 | NCP | Max Non Coincident Peak | 0.01493 | 0.19175 |
| 6 | 4 | NCP_SUBS | Max Non Coincident Peak - Substation Level | 0.01866 | - |
| 7 | 5 | NCP_PRI | Max Non Coincident Peak - Primary Level | - | - |
| 8 | 6 | NCP_SEC | Max Non Coincident Peak - Secondary Level | - | - |
| 9 | 7 | STORAGE_3S1W | 3S1W Demand at Storage Dispatch Peak Hours | - | - |
| 10 | 8 | AVGDEMAND | Average Demand | 0.03341 | - |
| 11 | 9 | ENERGY | Energy - kWh at Generation (used for Base Fuel Items) | 0.03341 | - |
| 12 | 10 | ENERGY3 | ANNUAL KWH SALES @ METER (excl 36B) | - | - |
| 13 | 11 | ENERGY4 | Energy - kWh at Meter (Non-renewable only) | 0.03011 | 0.14629 |
| 14 | 12 | FUELREV | Current Fuel Revenues | 0.02989 | 0.12729 |
| 15 | 13 | REV | Current Non Fuel Revenues | 0.01517 | 0.06174 |
| 16 | 14 | CUST371 | Installation on Customer Premises - Direct Assignment | - | - |
| 17 | 15 | CUST373 | Street Lighting and Signal Systems - Direct Assignment | - | - |
| 18 | 16 | CUST_DEP | Customer Deposits | - | - |
| 19 | 17 | NFREV | Non-Fuel Revenues | 0.01517 | 0.06174 |
| 20 | 18 | ST_LIGHTS | Streetlight Energy - kWh at generation | - | - |
| 21 | 19 | CUST902 | 902-Meter Reading Expenses | 0.00001 | 0.00000 |
| 22 | 20 | CUST903 | 903-Customer Records and Collection Expenses | 0.00001 | 0.00000 |
| 23 | 21 | _EXP904 | Uncollectible Percentages | - | - |
| 24 | 22 | WTD_SERV | Customer Weighted Service Costs | - | - |
| 25 | 23 | WTD_METE | Customer Weighted Meter Costs | 0.00040 | 0.00008 |
| 26 | 24 | CUSTS | Annual Number of Customers | 0.00001 | 0.00000 |
| 27 | 25 | CUSTEXP | Weighted Customer/Energy Allocator | 0.00603 | 0.02926 |
| 28 | 26 | 36B_Dedicated | Dedicated 36B Allocator | - | - |
| 29 | 27 | STORAGE_3S1W | 3S1W Demand at Storage Dispatch Peak Hours Transmission | - | - |
| 30 | | | | | |
| 31 | | **DEPENDENT ALLOCATORS** | | | |
| 32 | 19 | NP_PRO_DTOT | Net Plant with GI - Production-Demand | 0.02397 | - |
| 33 | 20 | NP_PRO_EFTOT | Net Plant with GI - Production-Energy-Fuel | - | - |
| 34 | 21 | NP_PRO_ENFTOT | Net Plant with GI - Production-Energy-Non-Fuel | - | - |
| 35 | 22 | NP_STO_PRO_DTOT | Net Plant with GI - Storage-Production-Demand | 0.02397 | - |
| 36 | 23 | NP_STO_TRA_DTOT | Net Plant with GI - Storage-Transmission-Demand | 0.01832 | 0.22744 |
| 37 | 24 | NP_STO_DIS_DSUBTOT | Net Plant with GI - Storage-Distribution-Demand-Subs | 0.01866 | - |
| 38 | 25 | NP_STO_DIS_DPRITOT | Net Plant with GI - Storage-Distribution-Demand-Primary | - | - |

This schedule is sponsored by PNM Witness Larkin

**PUBLIC SERVICE OF NEW MEXICO**
**Test Period Ending September 30th, 2028**

| Class_Factors Line No. | Factor No. | | | Schedule 6 Priv. Area Light 19 | Schedule 20 Streetlighting 20 |
|---|---|---|---|---|---|
| 1 | | | | | |
| 2 | | **INDEPENDENT ALLOCATORS** | | | |
| 3 | 1 | RH_DEMAND | Risk Hour Demand | 0.00036 | 0.00041 |
| 4 | 2 | TRANS_12CP | Transmission Demand (based on 12CP) | 0.00086 | 0.00132 |
| 5 | 3 | NCP | Max Non Coincident Peak | 0.00142 | 0.00166 |
| 6 | 4 | NCP_SUBS | Max Non Coincident Peak - Substation Level | 0.00177 | 0.00207 |
| 7 | 5 | NCP_PRI | Max Non Coincident Peak - Primary Level | 0.00189 | 0.00220 |
| 8 | 6 | NCP_SEC | Max Non Coincident Peak - Secondary Level | 0.00210 | 0.00245 |
| 9 | 7 | STORAGE_3S1W | 3S1W Demand at Storage Dispatch Peak Hours | - | - |
| 10 | 8 | AVGDEMAND | Average Demand | 0.00145 | 0.00166 |
| 11 | 9 | ENERGY | Energy - kWh at Generation (used for Base Fuel Items) | 0.00145 | 0.00166 |
| 12 | 10 | ENERGY3 | ANNUAL KWH SALES @ METER (excl 36B) | - | - |
| 13 | 11 | ENERGY4 | Energy - kWh at Meter (Non-renewable only) | 0.00113 | 0.00129 |
| 14 | 12 | FUELREV | Current Fuel Revenues | 0.00116 | 0.00067 |
| 15 | 13 | REV | Current Non Fuel Revenues | 0.00261 | 0.00445 |
| 16 | 14 | CUST371 | Installation on Customer Premises - Direct Assignment | 1.00000 | - |
| 17 | 15 | CUST373 | Street Lighting and Signal Systems - Direct Assignment | - | 1.00000 |
| 18 | 16 | CUST_DEP | Customer Deposits | - | - |
| 19 | 17 | NFREV | Non-Fuel Revenues | 0.00261 | 0.00445 |
| 20 | 18 | ST_LIGHTS | Streetlight Energy - kWh at generation | 0.27190 | 0.72810 |
| 21 | 19 | CUST902 | 902-Meter Reading Expenses | - | - |
| 22 | 20 | CUST903 | 903-Customer Records and Collection Expenses | - | - |
| 23 | 21 | _EXP904 | Uncollectible Percentages | - | - |
| 24 | 22 | WTD_SERV | Customer Weighted Service Costs | - | - |
| 25 | 23 | WTD_METE | Customer Weighted Meter Costs | - | - |
| 26 | 24 | CUSTS | Annual Number of Customers | - | - |
| 27 | 25 | CUSTEXP | Weighted Customer/Energy Allocator | 0.00023 | 0.00026 |
| 28 | 26 | 36B_Dedicated | Dedicated 36B Allocator | 1.00000 | - |
| 29 | 27 | STORAGE_3S1W | 3S1W Demand at Storage Dispatch Peak Hours Transmission | - | - |
| 30 | | | | | |
| 31 | | **DEPENDENT ALLOCATORS** | | | |
| 32 | 19 | NP_PRO_DTOT | Net Plant with GI - Production-Demand | 0.00036 | 0.00041 |
| 33 | 20 | NP_PRO_EFTOT | Net Plant with GI - Production-Energy-Fuel | - | - |
| 34 | 21 | NP_PRO_ENFTOT | Net Plant with GI - Production-Energy-Non-Fuel | - | - |
| 35 | 22 | NP_STO_PRO_DTOT | Net Plant with GI - Storage-Production-Demand | 0.00036 | 0.00041 |
| 36 | 23 | NP_STO_TRA_DTOT | Net Plant with GI - Storage-Transmission-Demand | 0.00086 | 0.00132 |
| 37 | 24 | NP_STO_DIS_DSUBTOT | Net Plant with GI - Storage-Distribution-Demand-Subs | 0.00177 | 0.00207 |
| 38 | 25 | NP_STO_DIS_DPRITOT | Net Plant with GI - Storage-Distribution-Demand-Primary | 0.00189 | 0.00220 |

This schedule is sponsored by PNM Witness Larkin

**PUBLIC SERVICE OF NEW MEXICO**
**Test Period Ending September 30th, 2028**

| Line No. | Class_Factors Factor No. | | | dule 20-Customer O Streetlighting 21 |
|---|---|---|---|---|
| 1 | | | | |
| 2 | | **INDEPENDENT ALLOCATORS** | | |
| 3 | 1 | RH_DEMAND | Risk Hour Demand | 0.00055 |
| 4 | 2 | TRANS_12CP | Transmission Demand (based on 12CP) | 0.00099 |
| 5 | 3 | NCP | Max Non Coincident Peak | 0.00222 |
| 6 | 4 | NCP_SUBS | Max Non Coincident Peak - Substation Level | 0.00278 |
| 7 | 5 | NCP_PRI | Max Non Coincident Peak - Primary Level | 0.00295 |
| 8 | 6 | NCP_SEC | Max Non Coincident Peak - Secondary Level | 0.00328 |
| 9 | 7 | STORAGE_3S1W | 3S1W Demand at Storage Dispatch Peak Hours | - |
| 10 | 8 | AVGDEMAND | Average Demand | 0.00222 |
| 11 | 9 | ENERGY | Energy - kWh at Generation (used for Base Fuel Items) | 0.00222 |
| 12 | 10 | ENERGY3 | ANNUAL KWH SALES @ METER (excl 36B) | - |
| 13 | 11 | ENERGY4 | Energy - kWh at Meter (Non-renewable only) | 0.00173 |
| 14 | 12 | FUELREV | Current Fuel Revenues | 0.00245 |
| 15 | 13 | REV | Current Non Fuel Revenues | 0.00133 |
| 16 | 14 | CUST371 | Installation on Customer Premises - Direct Assignment | - |
| 17 | 15 | CUST373 | Street Lighting and Signal Systems - Direct Assignment | - |
| 18 | 16 | CUST_DEP | Customer Deposits | - |
| 19 | 17 | NFREV | Non-Fuel Revenues | 0.00133 |
| 20 | 18 | ST_LIGHTS | Streetlight Energy - kWh at generation | - |
| 21 | 19 | CUST902 | 902-Meter Reading Expenses | - |
| 22 | 20 | CUST903 | 903-Customer Records and Collection Expenses | - |
| 23 | 21 | _EXP904 | Uncollectible Percentages | - |
| 24 | 22 | WTD_SERV | Customer Weighted Service Costs | - |
| 25 | 23 | WTD_METE | Customer Weighted Meter Costs | - |
| 26 | 24 | CUSTS | Annual Number of Customers | - |
| 27 | 25 | CUSTEXP | Weighted Customer/Energy Allocator | 0.00035 |
| 28 | 26 | 36B_Dedicated | Dedicated 36B Allocator | - |
| 29 | 27 | STORAGE_3S1W | 3S1W Demand at Storage Dispatch Peak Hours Transmission | - |
| 30 | | | | |
| 31 | | **DEPENDENT ALLOCATORS** | | |
| 32 | 19 | NP_PRO_DTOT | Net Plant with GI - Production-Demand | 0.00055 |
| 33 | 20 | NP_PRO_EFTOT | Net Plant with GI - Production-Energy-Fuel | - |
| 34 | 21 | NP_PRO_ENFTOT | Net Plant with GI - Production-Energy-Non-Fuel | - |
| 35 | 22 | NP_STO_PRO_DTOT | Net Plant with GI - Storage-Production-Demand | 0.00055 |
| 36 | 23 | NP_STO_TRA_DTOT | Net Plant with GI - Storage-Transmission-Demand | 0.00099 |
| 37 | 24 | NP_STO_DIS_DSUBTOT | Net Plant with GI - Storage-Distribution-Demand-Subs | 0.00278 |
| 38 | 25 | NP_STO_DIS_DPRITOT | Net Plant with GI - Storage-Distribution-Demand-Primary | 0.00295 |

This schedule is sponsored by PNM Witness Larkin

**PUBLIC SERVICE OF NEW MEXICO**
**Test Period Ending September 30th, 2028**

| Line No. | Class_Factors Factor No. | | | Other Input |
|---|---|---|---|---|
| 39 | 26 | NP_STO_DIS_DSECTOT | Net Plant with GI - Storage-Distribution-Demand-Secondary | |
| 40 | 27 | NP_TRA_DTOT | Net Plant with GI - Transmission-Demand | |
| 41 | 28 | NP_DIS_DSUBTOT | Net Plant with GI - Distribution-Demand-Subs | |
| 42 | 29 | NP_DIS_DPRITOT | Net Plant with GI - Distribution-Demand-Primary | |
| 43 | 30 | NP_DIS_DSECTOT | Net Plant with GI - Distribution-Demand-Secondary | |
| 44 | 31 | NP_DIS_CSRVTOT | Net Plant with GI - Distribution-Customer-Services | |
| 45 | 32 | NP_DIS_CMTRTOT | Net Plant with GI - Distribution-Customer-Meters | |
| 46 | 33 | NP_DIS_CMTRRTOT | Net Plant with GI - Distribution-Customer-Meter Reading | |
| 47 | 34 | NP_DIS_CBILTOT | Net Plant with GI - Distribution-Customer-Billing & Collections | |
| 48 | 35 | NP_DIS_CINFTOT | Net Plant with GI - Distribution-Customer-Service & Info | |
| 49 | 36 | NP_DIS_COTHTOT | Net Plant with GI - Distribution-Customer-Other | |
| 50 | 37 | NP_PRO_D_GI | Net GI Plant - Production-Demand | |
| 51 | 38 | NP_PRO_EF_GI | Net GI Plant - Production-Energy-Fuel | |
| 52 | 39 | NP_PRO_ENF_GI | Net GI Plant - Production-Energy-Non-Fuel | |
| 53 | 40 | NP_STO_PRO_D_GI | Net GI Plant - Storage-Production-Demand | |
| 54 | 41 | NP_STO_TRA_D_GI | Net GI Plant - Storage-Transmission-Demand | |
| 55 | 42 | NP_STO_DIS_DSUB_GI | Net GI Plant - Storage-Distribution-Demand-Subs | |
| 56 | 43 | NP_STO_DIS_DPRI_GI | Net GI Plant - Storage-Distribution-Demand-Primary | |
| 57 | 44 | NP_STO_DIS_DSEC_GI | Net GI Plant - Storage-Distribution-Demand-Secondary | |
| 58 | 45 | NP_TRA_D_GI | Net GI Plant - Transmission-Demand | |
| 59 | 46 | NP_DIS_DSUB_GI | Net GI Plant - Distribution-Demand-Subs | |
| 60 | 47 | NP_DIS_DPRI_GI | Net GI Plant - Distribution-Demand-Primary | |
| 61 | 48 | NP_DIS_DSEC_GI | Net GI Plant - Distribution-Demand-Secondary | |
| 62 | 49 | NP_DIS_CSRV_GI | Net GI Plant - Distribution-Customer-Services | |
| 63 | 50 | NP_DIS_CMTR_GI | Net GI Plant - Distribution-Customer-Meters | |
| 64 | 51 | NP_DIS_CMTRR_GI | Net GI Plant - Distribution-Customer-Meter Reading | |
| 65 | 52 | NP_DIS_CBIL_GI | Net GI Plant - Distribution-Customer-Billing & Collections | |
| 66 | 53 | NP_DIS_CINF_GI | Net GI Plant - Distribution-Customer-Service & Info | |
| 67 | 54 | NP_DIS_COTH_GI | Net GI Plant - Distribution-Customer-Other | |
| 68 | 55 | NP_DIS_SVCSMTRS | Net Plant - Distribution-Customer-Services and Meters | |
| 69 | 56 | 5819_PROD | Accts 581-589 - Production-Demand | |
| 70 | 57 | 5819_PROEF | Accts 581-589 - Production-Energy-Fuel | |
| 71 | 58 | 5819_PROENF | Accts 581-589 - Production-Energy-Non-Fuel | |
| 72 | 59 | 5819_STO_PRO_D | Accts 581-589 - Storage-Production-Demand | |
| 73 | 60 | 5819_STO_TRA_D | Accts 581-589 - Storage-Transmission-Demand | |
| 74 | 61 | 5819_STO_DIS_DSUB | Accts 581-589 - Storage-Distribution-Demand-Subs | |
| 75 | 62 | 5819_STO_DIS_DPRI | Accts 581-589 - Storage-Distribution-Demand-Primary | |
| 1 | 63 | 5819_STO_DIS_DSEC | Accts 581-589 - Storage-Distribution-Demand-Secondary | |

This schedule is sponsored by PNM Witness Larkin

**PUBLIC SERVICE OF NEW MEXICO**
**Test Period Ending September 30th, 2028**

| Class_Factors Line No. | Factor No. | | | Schedule 1 PNM Retail | Residential |
|---|---|---|---|---|---|
| 39 | 26 | NP_STO_DIS_DSECTOT | Net Plant with GI - Storage-Distribution-Demand-Secondary | - | - |
| 40 | 27 | NP_TRA_DTOT | Net Plant with GI - Transmission-Demand | 1.00000 | 0.37657 |
| 41 | 28 | NP_DIS_DSUBTOT | Net Plant with GI - Distribution-Demand-Subs | 1.00000 | 0.50167 |
| 42 | 29 | NP_DIS_DPRITOT | Net Plant with GI - Distribution-Demand-Primary | 1.00000 | 0.53302 |
| 43 | 30 | NP_DIS_DSECTOT | Net Plant with GI - Distribution-Demand-Secondary | 1.00000 | 0.59278 |
| 44 | 31 | NP_DIS_CSRVTOT | Net Plant with GI - Distribution-Customer-Services | 1.00000 | 0.91879 |
| 45 | 32 | NP_DIS_CMTRTOT | Net Plant with GI - Distribution-Customer-Meters | 1.00000 | 0.69636 |
| 46 | 33 | NP_DIS_CMTRRTOT | Net Plant with GI - Distribution-Customer-Meter Reading | 1.00000 | 0.87976 |
| 47 | 34 | NP_DIS_CBILTOT | Net Plant with GI - Distribution-Customer-Billing & Collections | 1.00000 | 0.87976 |
| 48 | 35 | NP_DIS_CINFTOT | Net Plant with GI - Distribution-Customer-Service & Info | - | - |
| 49 | 36 | NP_DIS_COTHTOT | Net Plant with GI - Distribution-Customer-Other | 1.00000 | 0.39226 |
| 50 | 37 | NP_PRO_D_GI | Net GI Plant - Production-Demand | 1.00000 | 0.48544 |
| 51 | 38 | NP_PRO_EF_GI | Net GI Plant - Production-Energy-Fuel | - | - |
| 52 | 39 | NP_PRO_ENF_GI | Net GI Plant - Production-Energy-Non-Fuel | - | - |
| 53 | 40 | NP_STO_PRO_D_GI | Net GI Plant - Storage-Production-Demand | - | - |
| 54 | 41 | NP_STO_TRA_D_GI | Net GI Plant - Storage-Transmission-Demand | - | - |
| 55 | 42 | NP_STO_DIS_DSUB_GI | Net GI Plant - Storage-Distribution-Demand-Subs | - | - |
| 56 | 43 | NP_STO_DIS_DPRI_GI | Net GI Plant - Storage-Distribution-Demand-Primary | - | - |
| 57 | 44 | NP_STO_DIS_DSEC_GI | Net GI Plant - Storage-Distribution-Demand-Secondary | - | - |
| 58 | 45 | NP_TRA_D_GI | Net GI Plant - Transmission-Demand | 1.00000 | 0.37657 |
| 59 | 46 | NP_DIS_DSUB_GI | Net GI Plant - Distribution-Demand-Subs | 1.00000 | 0.50167 |
| 60 | 47 | NP_DIS_DPRI_GI | Net GI Plant - Distribution-Demand-Primary | 1.00000 | 0.53302 |
| 61 | 48 | NP_DIS_DSEC_GI | Net GI Plant - Distribution-Demand-Secondary | 1.00000 | 0.59278 |
| 62 | 49 | NP_DIS_CSRV_GI | Net GI Plant - Distribution-Customer-Services | 1.00000 | 0.91879 |
| 63 | 50 | NP_DIS_CMTR_GI | Net GI Plant - Distribution-Customer-Meters | 1.00000 | 0.69636 |
| 64 | 51 | NP_DIS_CMTRR_GI | Net GI Plant - Distribution-Customer-Meter Reading | 1.00000 | 0.87976 |
| 65 | 52 | NP_DIS_CBIL_GI | Net GI Plant - Distribution-Customer-Billing & Collections | 1.00000 | 0.87976 |
| 66 | 53 | NP_DIS_CINF_GI | Net GI Plant - Distribution-Customer-Service & Info | - | - |
| 67 | 54 | NP_DIS_COTH_GI | Net GI Plant - Distribution-Customer-Other | 1.00000 | 0.75192 |
| 68 | 55 | NP_DIS_SVCSMTRS | Net Plant - Distribution-Customer-Services and Meters | - | - |
| 69 | 56 | 5819_PROD | Accts 581-589 - Production-Demand | - | - |
| 70 | 57 | 5819_PROEF | Accts 581-589 - Production-Energy-Fuel | - | - |
| 71 | 58 | 5819_PROENF | Accts 581-589 - Production-Energy-Non-Fuel | - | - |
| 72 | 59 | 5819_STO_PRO_D | Accts 581-589 - Storage-Production-Demand | - | - |
| 73 | 60 | 5819_STO_TRA_D | Accts 581-589 - Storage-Transmission-Demand | - | - |
| 74 | 61 | 5819_STO_DIS_DSUB | Accts 581-589 - Storage-Distribution-Demand-Subs | - | - |
| 75 | 62 | 5819_STO_DIS_DPRI | Accts 581-589 - Storage-Distribution-Demand-Primary | - | - |
| 1 | 63 | 5819_STO_DIS_DSEC | Accts 581-589 - Storage-Distribution-Demand-Secondary | - | - |

This schedule is sponsored by PNM Witness Larkin

**PUBLIC SERVICE OF NEW MEXICO**
**Test Period Ending September 30th, 2028**

| Class_Factors | | | | Schedule 1B | Schedule 2 |
|---|---|---|---|---|---|
| Line No. | Factor No. | | | Residential | Small Power |
| 39 | 26 | NP_STO_DIS_DSECTOT | Net Plant with GI - Storage-Distribution-Demand-Secondary | - | - |
| 40 | 27 | NP_TRA_DTOT | Net Plant with GI - Transmission-Demand | 0.00400 | 0.08161 |
| 41 | 28 | NP_DIS_DSUBTOT | Net Plant with GI - Distribution-Demand-Subs | 0.00555 | 0.12171 |
| 42 | 29 | NP_DIS_DPRITOT | Net Plant with GI - Distribution-Demand-Primary | 0.00590 | 0.12931 |
| 43 | 30 | NP_DIS_DSECTOT | Net Plant with GI - Distribution-Demand-Secondary | 0.00656 | 0.14381 |
| 44 | 31 | NP_DIS_CSRVTOT | Net Plant with GI - Distribution-Customer-Services | 0.01481 | 0.06577 |
| 45 | 32 | NP_DIS_CMTRTOT | Net Plant with GI - Distribution-Customer-Meters | 0.01123 | 0.19418 |
| 46 | 33 | NP_DIS_CMTRRTOT | Net Plant with GI - Distribution-Customer-Meter Reading | 0.01418 | 0.09645 |
| 47 | 34 | NP_DIS_CBILTOT | Net Plant with GI - Distribution-Customer-Billing & Collections | 0.01418 | 0.09645 |
| 48 | 35 | NP_DIS_CINFTOT | Net Plant with GI - Distribution-Customer-Service & Info | - | - |
| 49 | 36 | NP_DIS_COTHTOT | Net Plant with GI - Distribution-Customer-Other | 0.00615 | 0.04880 |
| 50 | 37 | NP_PRO_D_GI | Net GI Plant - Production-Demand | 0.00524 | 0.10730 |
| 51 | 38 | NP_PRO_EF_GI | Net GI Plant - Production-Energy-Fuel | - | - |
| 52 | 39 | NP_PRO_ENF_GI | Net GI Plant - Production-Energy-Non-Fuel | - | - |
| 53 | 40 | NP_STO_PRO_D_GI | Net GI Plant - Storage-Production-Demand | - | - |
| 54 | 41 | NP_STO_TRA_D_GI | Net GI Plant - Storage-Transmission-Demand | - | - |
| 55 | 42 | NP_STO_DIS_DSUB_GI | Net GI Plant - Storage-Distribution-Demand-Subs | - | - |
| 56 | 43 | NP_STO_DIS_DPRI_GI | Net GI Plant - Storage-Distribution-Demand-Primary | - | - |
| 57 | 44 | NP_STO_DIS_DSEC_GI | Net GI Plant - Storage-Distribution-Demand-Secondary | - | - |
| 58 | 45 | NP_TRA_D_GI | Net GI Plant - Transmission-Demand | 0.00400 | 0.08161 |
| 59 | 46 | NP_DIS_DSUB_GI | Net GI Plant - Distribution-Demand-Subs | 0.00555 | 0.12171 |
| 60 | 47 | NP_DIS_DPRI_GI | Net GI Plant - Distribution-Demand-Primary | 0.00590 | 0.12931 |
| 61 | 48 | NP_DIS_DSEC_GI | Net GI Plant - Distribution-Demand-Secondary | 0.00656 | 0.14381 |
| 62 | 49 | NP_DIS_CSRV_GI | Net GI Plant - Distribution-Customer-Services | 0.01481 | 0.06577 |
| 63 | 50 | NP_DIS_CMTR_GI | Net GI Plant - Distribution-Customer-Meters | 0.01123 | 0.19418 |
| 64 | 51 | NP_DIS_CMTRR_GI | Net GI Plant - Distribution-Customer-Meter Reading | 0.01418 | 0.09645 |
| 65 | 52 | NP_DIS_CBIL_GI | Net GI Plant - Distribution-Customer-Billing & Collections | 0.01418 | 0.09645 |
| 66 | 53 | NP_DIS_CINF_GI | Net GI Plant - Distribution-Customer-Service & Info | - | - |
| 67 | 54 | NP_DIS_COTH_GI | Net GI Plant - Distribution-Customer-Other | 0.01180 | 0.09355 |
| 68 | 55 | NP_DIS_SVCSMTRS | Net Plant - Distribution-Customer-Services and Meters | - | - |
| 69 | 56 | 5819_PROD | Accts 581-589 - Production-Demand | - | - |
| 70 | 57 | 5819_PROEF | Accts 581-589 - Production-Energy-Fuel | - | - |
| 71 | 58 | 5819_PROENF | Accts 581-589 - Production-Energy-Non-Fuel | - | - |
| 72 | 59 | 5819_STO_PRO_D | Accts 581-589 - Storage-Production-Demand | - | - |
| 73 | 60 | 5819_STO_TRA_D | Accts 581-589 - Storage-Transmission-Demand | - | - |
| 74 | 61 | 5819_STO_DIS_DSUB | Accts 581-589 - Storage-Distribution-Demand-Subs | - | - |
| 75 | 62 | 5819_STO_DIS_DPRI | Accts 581-589 - Storage-Distribution-Demand-Primary | - | - |
| 1 | 63 | 5819_STO_DIS_DSEC | Accts 581-589 - Storage-Distribution-Demand-Secondary | - | - |

This schedule is sponsored by PNM Witness Larkin

**PUBLIC SERVICE OF NEW MEXICO**
**Test Period Ending September 30th, 2028**

| Class_Factors Line No. | Factor No. | | | Schedule 2B Small Power | Schedule 3B General Power |
|---|---|---|---|---|---|
| 39 | 26 | NP_STO_DIS_DSECTOT | Net Plant with GI - Storage-Distribution-Demand-Secondary | - | - |
| 40 | 27 | NP_TRA_DTOT | Net Plant with GI - Transmission-Demand | 0.00087 | 0.12203 |
| 41 | 28 | NP_DIS_DSUBTOT | Net Plant with GI - Distribution-Demand-Subs | 0.00161 | 0.14523 |
| 42 | 29 | NP_DIS_DPRITOT | Net Plant with GI - Distribution-Demand-Primary | 0.00171 | 0.15431 |
| 43 | 30 | NP_DIS_DSECTOT | Net Plant with GI - Distribution-Demand-Secondary | 0.00191 | 0.17161 |
| 44 | 31 | NP_DIS_CSRVTOT | Net Plant with GI - Distribution-Customer-Services | 0.00062 | - |
| 45 | 32 | NP_DIS_CMTRTOT | Net Plant with GI - Distribution-Customer-Meters | 0.00184 | 0.04395 |
| 46 | 33 | NP_DIS_CMTRRTOT | Net Plant with GI - Distribution-Customer-Meter Reading | 0.00091 | 0.00493 |
| 47 | 34 | NP_DIS_CBILTOT | Net Plant with GI - Distribution-Customer-Billing & Collections | 0.00091 | 0.00493 |
| 48 | 35 | NP_DIS_CINFTOT | Net Plant with GI - Distribution-Customer-Service & Info | - | - |
| 49 | 36 | NP_DIS_COTHTOT | Net Plant with GI - Distribution-Customer-Other | 0.00050 | 0.01640 |
| 50 | 37 | NP_PRO_D_GI | Net GI Plant - Production-Demand | 0.00141 | 0.15830 |
| 51 | 38 | NP_PRO_EF_GI | Net GI Plant - Production-Energy-Fuel | - | - |
| 52 | 39 | NP_PRO_ENF_GI | Net GI Plant - Production-Energy-Non-Fuel | - | - |
| 53 | 40 | NP_STO_PRO_D_GI | Net GI Plant - Storage-Production-Demand | - | - |
| 54 | 41 | NP_STO_TRA_D_GI | Net GI Plant - Storage-Transmission-Demand | - | - |
| 55 | 42 | NP_STO_DIS_DSUB_GI | Net GI Plant - Storage-Distribution-Demand-Subs | - | - |
| 56 | 43 | NP_STO_DIS_DPRI_GI | Net GI Plant - Storage-Distribution-Demand-Primary | - | - |
| 57 | 44 | NP_STO_DIS_DSEC_GI | Net GI Plant - Storage-Distribution-Demand-Secondary | - | - |
| 58 | 45 | NP_TRA_D_GI | Net GI Plant - Transmission-Demand | 0.00087 | 0.12203 |
| 59 | 46 | NP_DIS_DSUB_GI | Net GI Plant - Distribution-Demand-Subs | 0.00161 | 0.14523 |
| 60 | 47 | NP_DIS_DPRI_GI | Net GI Plant - Distribution-Demand-Primary | 0.00171 | 0.15431 |
| 61 | 48 | NP_DIS_DSEC_GI | Net GI Plant - Distribution-Demand-Secondary | 0.00191 | 0.17161 |
| 62 | 49 | NP_DIS_CSRV_GI | Net GI Plant - Distribution-Customer-Services | 0.00062 | - |
| 63 | 50 | NP_DIS_CMTR_GI | Net GI Plant - Distribution-Customer-Meters | 0.00184 | 0.04395 |
| 64 | 51 | NP_DIS_CMTRR_GI | Net GI Plant - Distribution-Customer-Meter Reading | 0.00091 | 0.00493 |
| 65 | 52 | NP_DIS_CBIL_GI | Net GI Plant - Distribution-Customer-Billing & Collections | 0.00091 | 0.00493 |
| 66 | 53 | NP_DIS_CINF_GI | Net GI Plant - Distribution-Customer-Service & Info | - | - |
| 67 | 54 | NP_DIS_COTH_GI | Net GI Plant - Distribution-Customer-Other | 0.00097 | 0.03143 |
| 68 | 55 | NP_DIS_SVCSMTRS | Net Plant - Distribution-Customer-Services and Meters | - | - |
| 69 | 56 | 5819_PROD | Accts 581-589 - Production-Demand | - | - |
| 70 | 57 | 5819_PROEF | Accts 581-589 - Production-Energy-Fuel | - | - |
| 71 | 58 | 5819_PROENF | Accts 581-589 - Production-Energy-Non-Fuel | - | - |
| 72 | 59 | 5819_STO_PRO_D | Accts 581-589 - Storage-Production-Demand | - | - |
| 73 | 60 | 5819_STO_TRA_D | Accts 581-589 - Storage-Transmission-Demand | - | - |
| 74 | 61 | 5819_STO_DIS_DSUB | Accts 581-589 - Storage-Distribution-Demand-Subs | - | - |
| 75 | 62 | 5819_STO_DIS_DPRI | Accts 581-589 - Storage-Distribution-Demand-Primary | - | - |
| 1 | 63 | 5819_STO_DIS_DSEC | Accts 581-589 - Storage-Distribution-Demand-Secondary | - | - |

This schedule is sponsored by PNM Witness Larkin

**PUBLIC SERVICE OF NEW MEXICO**
**Test Period Ending September 30th, 2028**

| Class_Factors Line No. | Factor No. | | | Schedule 3C GP Low LF | Schedule 3D General Power Gov |
|---|---|---|---|---|---|
| 39 | 26 | NP_STO_DIS_DSECTOT | Net Plant with GI - Storage-Distribution-Demand-Secondary | - | - |
| 40 | 27 | NP_TRA_DTOT | Net Plant with GI - Transmission-Demand | 0.02615 | 0.00874 |
| 41 | 28 | NP_DIS_DSUBTOT | Net Plant with GI - Distribution-Demand-Subs | 0.04558 | 0.01041 |
| 42 | 29 | NP_DIS_DPRITOT | Net Plant with GI - Distribution-Demand-Primary | 0.04843 | 0.01106 |
| 43 | 30 | NP_DIS_DSECTOT | Net Plant with GI - Distribution-Demand-Secondary | 0.05386 | 0.01230 |
| 44 | 31 | NP_DIS_CSRVTOT | Net Plant with GI - Distribution-Customer-Services | - | - |
| 45 | 32 | NP_DIS_CMTRTOT | Net Plant with GI - Distribution-Customer-Meters | 0.01987 | 0.00261 |
| 46 | 33 | NP_DIS_CMTRRTOT | Net Plant with GI - Distribution-Customer-Meter Reading | 0.00223 | 0.00029 |
| 47 | 34 | NP_DIS_CBILTOT | Net Plant with GI - Distribution-Customer-Billing & Collections | 0.00223 | 0.00029 |
| 48 | 35 | NP_DIS_CINFTOT | Net Plant with GI - Distribution-Customer-Service & Info | - | - |
| 49 | 36 | NP_DIS_COTHTOT | Net Plant with GI - Distribution-Customer-Other | 0.00453 | 0.00122 |
| 50 | 37 | NP_PRO_D_GI | Net GI Plant - Production-Demand | 0.03644 | 0.01104 |
| 51 | 38 | NP_PRO_EF_GI | Net GI Plant - Production-Energy-Fuel | - | - |
| 52 | 39 | NP_PRO_ENF_GI | Net GI Plant - Production-Energy-Non-Fuel | - | - |
| 53 | 40 | NP_STO_PRO_D_GI | Net GI Plant - Storage-Production-Demand | - | - |
| 54 | 41 | NP_STO_TRA_D_GI | Net GI Plant - Storage-Transmission-Demand | - | - |
| 55 | 42 | NP_STO_DIS_DSUB_GI | Net GI Plant - Storage-Distribution-Demand-Subs | - | - |
| 56 | 43 | NP_STO_DIS_DPRI_GI | Net GI Plant - Storage-Distribution-Demand-Primary | - | - |
| 57 | 44 | NP_STO_DIS_DSEC_GI | Net GI Plant - Storage-Distribution-Demand-Secondary | - | - |
| 58 | 45 | NP_TRA_D_GI | Net GI Plant - Transmission-Demand | 0.02615 | 0.00874 |
| 59 | 46 | NP_DIS_DSUB_GI | Net GI Plant - Distribution-Demand-Subs | 0.04558 | 0.01041 |
| 60 | 47 | NP_DIS_DPRI_GI | Net GI Plant - Distribution-Demand-Primary | 0.04843 | 0.01106 |
| 61 | 48 | NP_DIS_DSEC_GI | Net GI Plant - Distribution-Demand-Secondary | 0.05386 | 0.01230 |
| 62 | 49 | NP_DIS_CSRV_GI | Net GI Plant - Distribution-Customer-Services | - | - |
| 63 | 50 | NP_DIS_CMTR_GI | Net GI Plant - Distribution-Customer-Meters | 0.01987 | 0.00261 |
| 64 | 51 | NP_DIS_CMTRR_GI | Net GI Plant - Distribution-Customer-Meter Reading | 0.00223 | 0.00029 |
| 65 | 52 | NP_DIS_CBIL_GI | Net GI Plant - Distribution-Customer-Billing & Collections | 0.00223 | 0.00029 |
| 66 | 53 | NP_DIS_CINF_GI | Net GI Plant - Distribution-Customer-Service & Info | - | - |
| 67 | 54 | NP_DIS_COTH_GI | Net GI Plant - Distribution-Customer-Other | 0.00867 | 0.00233 |
| 68 | 55 | NP_DIS_SVCSMTRS | Net Plant - Distribution-Customer-Services and Meters | - | - |
| 69 | 56 | 5819_PROD | Accts 581-589 - Production-Demand | - | - |
| 70 | 57 | 5819_PROEF | Accts 581-589 - Production-Energy-Fuel | - | - |
| 71 | 58 | 5819_PROENF | Accts 581-589 - Production-Energy-Non-Fuel | - | - |
| 72 | 59 | 5819_STO_PRO_D | Accts 581-589 - Storage-Production-Demand | - | - |
| 73 | 60 | 5819_STO_TRA_D | Accts 581-589 - Storage-Transmission-Demand | - | - |
| 74 | 61 | 5819_STO_DIS_DSUB | Accts 581-589 - Storage-Distribution-Demand-Subs | - | - |
| 75 | 62 | 5819_STO_DIS_DPRI | Accts 581-589 - Storage-Distribution-Demand-Primary | - | - |
| 1 | 63 | 5819_STO_DIS_DSEC | Accts 581-589 - Storage-Distribution-Demand-Secondary | - | - |

This schedule is sponsored by PNM Witness Larkin

**PUBLIC SERVICE OF NEW MEXICO**
**Test Period Ending September 30th, 2028**

| Class_Factors Line No. | Factor No. | | | Schedule 3E GP Low LF Gov |
|---|---|---|---|---|
| 39 | 26 | NP_STO_DIS_DSECTOT | Net Plant with GI - Storage-Distribution-Demand-Secondary | - |
| 40 | 27 | NP_TRA_DTOT | Net Plant with GI - Transmission-Demand | 0.00180 |
| 41 | 28 | NP_DIS_DSUBTOT | Net Plant with GI - Distribution-Demand-Subs | 0.00294 |
| 42 | 29 | NP_DIS_DPRITOT | Net Plant with GI - Distribution-Demand-Primary | 0.00313 |
| 43 | 30 | NP_DIS_DSECTOT | Net Plant with GI - Distribution-Demand-Secondary | 0.00348 |
| 44 | 31 | NP_DIS_CSRVTOT | Net Plant with GI - Distribution-Customer-Services | - |
| 45 | 32 | NP_DIS_CMTRTOT | Net Plant with GI - Distribution-Customer-Meters | 0.00114 |
| 46 | 33 | NP_DIS_CMTRRTOT | Net Plant with GI - Distribution-Customer-Meter Reading | 0.00013 |
| 47 | 34 | NP_DIS_CBILTOT | Net Plant with GI - Distribution-Customer-Billing & Collections | 0.00013 |
| 48 | 35 | NP_DIS_CINFTOT | Net Plant with GI - Distribution-Customer-Service & Info | - |
| 49 | 36 | NP_DIS_COTHTOT | Net Plant with GI - Distribution-Customer-Other | 0.00028 |
| 50 | 37 | NP_PRO_D_GI | Net GI Plant - Production-Demand | 0.00233 |
| 51 | 38 | NP_PRO_EF_GI | Net GI Plant - Production-Energy-Fuel | - |
| 52 | 39 | NP_PRO_ENF_GI | Net GI Plant - Production-Energy-Non-Fuel | - |
| 53 | 40 | NP_STO_PRO_D_GI | Net GI Plant - Storage-Production-Demand | - |
| 54 | 41 | NP_STO_TRA_D_GI | Net GI Plant - Storage-Transmission-Demand | - |
| 55 | 42 | NP_STO_DIS_DSUB_GI | Net GI Plant - Storage-Distribution-Demand-Subs | - |
| 56 | 43 | NP_STO_DIS_DPRI_GI | Net GI Plant - Storage-Distribution-Demand-Primary | - |
| 57 | 44 | NP_STO_DIS_DSEC_GI | Net GI Plant - Storage-Distribution-Demand-Secondary | - |
| 58 | 45 | NP_TRA_D_GI | Net GI Plant - Transmission-Demand | 0.00180 |
| 59 | 46 | NP_DIS_DSUB_GI | Net GI Plant - Distribution-Demand-Subs | 0.00294 |
| 60 | 47 | NP_DIS_DPRI_GI | Net GI Plant - Distribution-Demand-Primary | 0.00313 |
| 61 | 48 | NP_DIS_DSEC_GI | Net GI Plant - Distribution-Demand-Secondary | 0.00348 |
| 62 | 49 | NP_DIS_CSRV_GI | Net GI Plant - Distribution-Customer-Services | - |
| 63 | 50 | NP_DIS_CMTR_GI | Net GI Plant - Distribution-Customer-Meters | 0.00114 |
| 64 | 51 | NP_DIS_CMTRR_GI | Net GI Plant - Distribution-Customer-Meter Reading | 0.00013 |
| 65 | 52 | NP_DIS_CBIL_GI | Net GI Plant - Distribution-Customer-Billing & Collections | 0.00013 |
| 66 | 53 | NP_DIS_CINF_GI | Net GI Plant - Distribution-Customer-Service & Info | - |
| 67 | 54 | NP_DIS_COTH_GI | Net GI Plant - Distribution-Customer-Other | 0.00054 |
| 68 | 55 | NP_DIS_SVCSMTRS | Net Plant - Distribution-Customer-Services and Meters | - |
| 69 | 56 | 5819_PROD | Accts 581-589 - Production-Demand | - |
| 70 | 57 | 5819_PROEF | Accts 581-589 - Production-Energy-Fuel | - |
| 71 | 58 | 5819_PROENF | Accts 581-589 - Production-Energy-Non-Fuel | - |
| 72 | 59 | 5819_STO_PRO_D | Accts 581-589 - Storage-Production-Demand | - |
| 73 | 60 | 5819_STO_TRA_D | Accts 581-589 - Storage-Transmission-Demand | - |
| 74 | 61 | 5819_STO_DIS_DSUB | Accts 581-589 - Storage-Distribution-Demand-Subs | - |
| 75 | 62 | 5819_STO_DIS_DPRI | Accts 581-589 - Storage-Distribution-Demand-Primary | - |
| 1 | 63 | 5819_STO_DIS_DSEC | Accts 581-589 - Storage-Distribution-Demand-Secondary | - |

This schedule is sponsored by PNM Witness Larkin

**PUBLIC SERVICE OF NEW MEXICO**
**Test Period Ending September 30th, 2028**

| Class_Factors Line No. | Factor No. | | | Schedule 3F GP Charging Stations | Schedule 4 Large Power |
|---|---|---|---|---|---|
| 39 | 26 | NP_STO_DIS_DSECTOT | Net Plant with GI - Storage-Distribution-Demand-Secondary | - | - |
| 40 | 27 | NP_TRA_DTOT | Net Plant with GI - Transmission-Demand | 0.00066 | 0.07136 |
| 41 | 28 | NP_DIS_DSUBTOT | Net Plant with GI - Distribution-Demand-Subs | 0.00196 | 0.07557 |
| 42 | 29 | NP_DIS_DPRITOT | Net Plant with GI - Distribution-Demand-Primary | 0.00208 | 0.08029 |
| 43 | 30 | NP_DIS_DSECTOT | Net Plant with GI - Distribution-Demand-Secondary | 0.00231 | - |
| 44 | 31 | NP_DIS_CSRVTOT | Net Plant with GI - Distribution-Customer-Services | - | - |
| 45 | 32 | NP_DIS_CMTRTOT | Net Plant with GI - Distribution-Customer-Meters | 0.00035 | 0.01283 |
| 46 | 33 | NP_DIS_CMTRRTOT | Net Plant with GI - Distribution-Customer-Meter Reading | 0.00004 | 0.00028 |
| 47 | 34 | NP_DIS_CBILTOT | Net Plant with GI - Distribution-Customer-Billing & Collections | 0.00004 | 0.00028 |
| 48 | 35 | NP_DIS_CINFTOT | Net Plant with GI - Distribution-Customer-Service & Info | - | - |
| 49 | 36 | NP_DIS_COTHTOT | Net Plant with GI - Distribution-Customer-Other | 0.00012 | 0.01018 |
| 50 | 37 | NP_PRO_D_GI | Net GI Plant - Production-Demand | 0.00091 | 0.09341 |
| 51 | 38 | NP_PRO_EF_GI | Net GI Plant - Production-Energy-Fuel | - | - |
| 52 | 39 | NP_PRO_ENF_GI | Net GI Plant - Production-Energy-Non-Fuel | - | - |
| 53 | 40 | NP_STO_PRO_D_GI | Net GI Plant - Storage-Production-Demand | - | - |
| 54 | 41 | NP_STO_TRA_D_GI | Net GI Plant - Storage-Transmission-Demand | - | - |
| 55 | 42 | NP_STO_DIS_DSUB_GI | Net GI Plant - Storage-Distribution-Demand-Subs | - | - |
| 56 | 43 | NP_STO_DIS_DPRI_GI | Net GI Plant - Storage-Distribution-Demand-Primary | - | - |
| 57 | 44 | NP_STO_DIS_DSEC_GI | Net GI Plant - Storage-Distribution-Demand-Secondary | - | - |
| 58 | 45 | NP_TRA_D_GI | Net GI Plant - Transmission-Demand | 0.00066 | 0.07136 |
| 59 | 46 | NP_DIS_DSUB_GI | Net GI Plant - Distribution-Demand-Subs | 0.00196 | 0.07557 |
| 60 | 47 | NP_DIS_DPRI_GI | Net GI Plant - Distribution-Demand-Primary | 0.00208 | 0.08029 |
| 61 | 48 | NP_DIS_DSEC_GI | Net GI Plant - Distribution-Demand-Secondary | 0.00231 | - |
| 62 | 49 | NP_DIS_CSRV_GI | Net GI Plant - Distribution-Customer-Services | - | - |
| 63 | 50 | NP_DIS_CMTR_GI | Net GI Plant - Distribution-Customer-Meters | 0.00035 | 0.01283 |
| 64 | 51 | NP_DIS_CMTRR_GI | Net GI Plant - Distribution-Customer-Meter Reading | 0.00004 | 0.00028 |
| 65 | 52 | NP_DIS_CBIL_GI | Net GI Plant - Distribution-Customer-Billing & Collections | 0.00004 | 0.00028 |
| 66 | 53 | NP_DIS_CINF_GI | Net GI Plant - Distribution-Customer-Service & Info | - | - |
| 67 | 54 | NP_DIS_COTH_GI | Net GI Plant - Distribution-Customer-Other | 0.00022 | 0.01952 |
| 68 | 55 | NP_DIS_SVCSMTRS | Net Plant - Distribution-Customer-Services and Meters | - | - |
| 69 | 56 | 5819_PROD | Accts 581-589 - Production-Demand | - | - |
| 70 | 57 | 5819_PROEF | Accts 581-589 - Production-Energy-Fuel | - | - |
| 71 | 58 | 5819_PROENF | Accts 581-589 - Production-Energy-Non-Fuel | - | - |
| 72 | 59 | 5819_STO_PRO_D | Accts 581-589 - Storage-Production-Demand | - | - |
| 73 | 60 | 5819_STO_TRA_D | Accts 581-589 - Storage-Transmission-Demand | - | - |
| 74 | 61 | 5819_STO_DIS_DSUB | Accts 581-589 - Storage-Distribution-Demand-Subs | - | - |
| 75 | 62 | 5819_STO_DIS_DPRI | Accts 581-589 - Storage-Distribution-Demand-Primary | - | - |
| 1 | 63 | 5819_STO_DIS_DSEC | Accts 581-589 - Storage-Distribution-Demand-Secondary | - | - |

This schedule is sponsored by PNM Witness Larkin

**PUBLIC SERVICE OF NEW MEXICO**
**Test Period Ending September 30th, 2028**

| Class_Factors Line No. | Factor No. | | | Schedule 5 Industrial Power | Schedule 10 Irrigation |
|---|---|---|---|---|---|
| 39 | 26 | NP_STO_DIS_DSECTOT | Net Plant with GI - Storage-Distribution-Demand-Secondary | - | - |
| 40 | 27 | NP_TRA_DTOT | Net Plant with GI - Transmission-Demand | - | 0.00170 |
| 41 | 28 | NP_DIS_DSUBTOT | Net Plant with GI - Distribution-Demand-Subs | - | 0.00301 |
| 42 | 29 | NP_DIS_DPRITOT | Net Plant with GI - Distribution-Demand-Primary | - | 0.00320 |
| 43 | 30 | NP_DIS_DSECTOT | Net Plant with GI - Distribution-Demand-Secondary | - | 0.00355 |
| 44 | 31 | NP_DIS_CSRVTOT | Net Plant with GI - Distribution-Customer-Services | - | - |
| 45 | 32 | NP_DIS_CMTRTOT | Net Plant with GI - Distribution-Customer-Meters | - | 0.00492 |
| 46 | 33 | NP_DIS_CMTRRTOT | Net Plant with GI - Distribution-Customer-Meter Reading | - | 0.00055 |
| 47 | 34 | NP_DIS_CBILTOT | Net Plant with GI - Distribution-Customer-Billing & Collections | - | 0.00055 |
| 48 | 35 | NP_DIS_CINFTOT | Net Plant with GI - Distribution-Customer-Service & Info | - | - |
| 49 | 36 | NP_DIS_COTHTOT | Net Plant with GI - Distribution-Customer-Other | - | 0.00047 |
| 50 | 37 | NP_PRO_D_GI | Net GI Plant - Production-Demand | - | 0.00247 |
| 51 | 38 | NP_PRO_EF_GI | Net GI Plant - Production-Energy-Fuel | - | - |
| 52 | 39 | NP_PRO_ENF_GI | Net GI Plant - Production-Energy-Non-Fuel | - | - |
| 53 | 40 | NP_STO_PRO_D_GI | Net GI Plant - Storage-Production-Demand | - | - |
| 54 | 41 | NP_STO_TRA_D_GI | Net GI Plant - Storage-Transmission-Demand | - | - |
| 55 | 42 | NP_STO_DIS_DSUB_GI | Net GI Plant - Storage-Distribution-Demand-Subs | - | - |
| 56 | 43 | NP_STO_DIS_DPRI_GI | Net GI Plant - Storage-Distribution-Demand-Primary | - | - |
| 57 | 44 | NP_STO_DIS_DSEC_GI | Net GI Plant - Storage-Distribution-Demand-Secondary | - | - |
| 58 | 45 | NP_TRA_D_GI | Net GI Plant - Transmission-Demand | - | 0.00170 |
| 59 | 46 | NP_DIS_DSUB_GI | Net GI Plant - Distribution-Demand-Subs | - | 0.00301 |
| 60 | 47 | NP_DIS_DPRI_GI | Net GI Plant - Distribution-Demand-Primary | - | 0.00320 |
| 61 | 48 | NP_DIS_DSEC_GI | Net GI Plant - Distribution-Demand-Secondary | - | 0.00355 |
| 62 | 49 | NP_DIS_CSRV_GI | Net GI Plant - Distribution-Customer-Services | - | - |
| 63 | 50 | NP_DIS_CMTR_GI | Net GI Plant - Distribution-Customer-Meters | - | 0.00492 |
| 64 | 51 | NP_DIS_CMTRR_GI | Net GI Plant - Distribution-Customer-Meter Reading | - | 0.00055 |
| 65 | 52 | NP_DIS_CBIL_GI | Net GI Plant - Distribution-Customer-Billing & Collections | - | 0.00055 |
| 66 | 53 | NP_DIS_CINF_GI | Net GI Plant - Distribution-Customer-Service & Info | - | - |
| 67 | 54 | NP_DIS_COTH_GI | Net GI Plant - Distribution-Customer-Other | - | 0.00091 |
| 68 | 55 | NP_DIS_SVCSMTRS | Net Plant - Distribution-Customer-Services and Meters | - | - |
| 69 | 56 | 5819_PROD | Accts 581-589 - Production-Demand | - | - |
| 70 | 57 | 5819_PROEF | Accts 581-589 - Production-Energy-Fuel | - | - |
| 71 | 58 | 5819_PROENF | Accts 581-589 - Production-Energy-Non-Fuel | - | - |
| 72 | 59 | 5819_STO_PRO_D | Accts 581-589 - Storage-Production-Demand | - | - |
| 73 | 60 | 5819_STO_TRA_D | Accts 581-589 - Storage-Transmission-Demand | - | - |
| 74 | 61 | 5819_STO_DIS_DSUB | Accts 581-589 - Storage-Distribution-Demand-Subs | - | - |
| 75 | 62 | 5819_STO_DIS_DPRI | Accts 581-589 - Storage-Distribution-Demand-Primary | - | - |
| 1 | 63 | 5819_STO_DIS_DSEC | Accts 581-589 - Storage-Distribution-Demand-Secondary | - | - |

This schedule is sponsored by PNM Witness Larkin

**PUBLIC SERVICE OF NEW MEXICO**
**Test Period Ending September 30th, 2028**

| Class_Factors Line No. | Factor No. | | | Schedule 11 Water & Sewage | Schedule 15 Industrial Power |
|---|---|---|---|---|---|
| 39 | 26 | NP_STO_DIS_DSECTOT | Net Plant with GI - Storage-Distribution-Demand-Secondary | - | - |
| 40 | 27 | NP_TRA_DTOT | Net Plant with GI - Transmission-Demand | 0.00667 | 0.00 |
| 41 | 28 | NP_DIS_DSUBTOT | Net Plant with GI - Distribution-Demand-Subs | 0.01931 | - |
| 42 | 29 | NP_DIS_DPRITOT | Net Plant with GI - Distribution-Demand-Primary | 0.02052 | - |
| 43 | 30 | NP_DIS_DSECTOT | Net Plant with GI - Distribution-Demand-Secondary | - | - |
| 44 | 31 | NP_DIS_CSRVTOT | Net Plant with GI - Distribution-Customer-Services | - | - |
| 45 | 32 | NP_DIS_CMTRTOT | Net Plant with GI - Distribution-Customer-Meters | 0.00927 | 0.00 |
| 46 | 33 | NP_DIS_CMTRRTOT | Net Plant with GI - Distribution-Customer-Meter Reading | 0.00020 | 0.00 |
| 47 | 34 | NP_DIS_CBILTOT | Net Plant with GI - Distribution-Customer-Billing & Collections | 0.00020 | 0.00 |
| 48 | 35 | NP_DIS_CINFTOT | Net Plant with GI - Distribution-Customer-Service & Info | - | - |
| 49 | 36 | NP_DIS_COTHTOT | Net Plant with GI - Distribution-Customer-Other | 0.00177 | 0.00 |
| 50 | 37 | NP_PRO_D_GI | Net GI Plant - Production-Demand | 0.00720 | 0.01 |
| 51 | 38 | NP_PRO_EF_GI | Net GI Plant - Production-Energy-Fuel | - | - |
| 52 | 39 | NP_PRO_ENF_GI | Net GI Plant - Production-Energy-Non-Fuel | - | - |
| 53 | 40 | NP_STO_PRO_D_GI | Net GI Plant - Storage-Production-Demand | - | - |
| 54 | 41 | NP_STO_TRA_D_GI | Net GI Plant - Storage-Transmission-Demand | - | - |
| 55 | 42 | NP_STO_DIS_DSUB_GI | Net GI Plant - Storage-Distribution-Demand-Subs | - | - |
| 56 | 43 | NP_STO_DIS_DPRI_GI | Net GI Plant - Storage-Distribution-Demand-Primary | - | - |
| 57 | 44 | NP_STO_DIS_DSEC_GI | Net GI Plant - Storage-Distribution-Demand-Secondary | - | - |
| 58 | 45 | NP_TRA_D_GI | Net GI Plant - Transmission-Demand | 0.00667 | 0.00 |
| 59 | 46 | NP_DIS_DSUB_GI | Net GI Plant - Distribution-Demand-Subs | 0.01931 | - |
| 60 | 47 | NP_DIS_DPRI_GI | Net GI Plant - Distribution-Demand-Primary | 0.02052 | - |
| 61 | 48 | NP_DIS_DSEC_GI | Net GI Plant - Distribution-Demand-Secondary | - | - |
| 62 | 49 | NP_DIS_CSRV_GI | Net GI Plant - Distribution-Customer-Services | - | - |
| 63 | 50 | NP_DIS_CMTR_GI | Net GI Plant - Distribution-Customer-Meters | 0.00927 | 0.00 |
| 64 | 51 | NP_DIS_CMTRR_GI | Net GI Plant - Distribution-Customer-Meter Reading | 0.00020 | 0.00 |
| 65 | 52 | NP_DIS_CBIL_GI | Net GI Plant - Distribution-Customer-Billing & Collections | 0.00020 | 0.00 |
| 66 | 53 | NP_DIS_CINF_GI | Net GI Plant - Distribution-Customer-Service & Info | - | - |
| 67 | 54 | NP_DIS_COTH_GI | Net GI Plant - Distribution-Customer-Other | 0.00339 | 0.00 |
| 68 | 55 | NP_DIS_SVCSMTRS | Net Plant - Distribution-Customer-Services and Meters | - | - |
| 69 | 56 | 5819_PROD | Accts 581-589 - Production-Demand | - | - |
| 70 | 57 | 5819_PROEF | Accts 581-589 - Production-Energy-Fuel | - | - |
| 71 | 58 | 5819_PROENF | Accts 581-589 - Production-Energy-Non-Fuel | - | - |
| 72 | 59 | 5819_STO_PRO_D | Accts 581-589 - Storage-Production-Demand | - | - |
| 73 | 60 | 5819_STO_TRA_D | Accts 581-589 - Storage-Transmission-Demand | - | - |
| 74 | 61 | 5819_STO_DIS_DSUB | Accts 581-589 - Storage-Distribution-Demand-Subs | - | - |
| 75 | 62 | 5819_STO_DIS_DPRI | Accts 581-589 - Storage-Distribution-Demand-Primary | - | - |
| 1 | 63 | 5819_STO_DIS_DSEC | Accts 581-589 - Storage-Distribution-Demand-Secondary | - | - |

This schedule is sponsored by PNM Witness Larkin

**PUBLIC SERVICE OF NEW MEXICO**
**Test Period Ending September 30th, 2028**

| Class_Factors Line No. | Factor No. | | | Schedule 30 Industrial Power | Schedule 33B Large Service |
|---|---|---|---|---|---|
| 39 | 26 | NP_STO_DIS_DSECTOT | Net Plant with GI - Storage-Distribution-Demand-Secondary | - | - |
| 40 | 27 | NP_TRA_DTOT | Net Plant with GI - Transmission-Demand | 0.04397 | 0.00064 |
| 41 | 28 | NP_DIS_DSUBTOT | Net Plant with GI - Distribution-Demand-Subs | 0.04017 | - |
| 42 | 29 | NP_DIS_DPRITOT | Net Plant with GI - Distribution-Demand-Primary | - | - |
| 43 | 30 | NP_DIS_DSECTOT | Net Plant with GI - Distribution-Demand-Secondary | - | - |
| 44 | 31 | NP_DIS_CSRVTOT | Net Plant with GI - Distribution-Customer-Services | - | - |
| 45 | 32 | NP_DIS_CMTRTOT | Net Plant with GI - Distribution-Customer-Meters | 0.00008 | 0.00081 |
| 46 | 33 | NP_DIS_CMTRRTOT | Net Plant with GI - Distribution-Customer-Meter Reading | 0.00000 | 0.00002 |
| 47 | 34 | NP_DIS_CBILTOT | Net Plant with GI - Distribution-Customer-Billing & Collections | 0.00000 | 0.00002 |
| 48 | 35 | NP_DIS_CINFTOT | Net Plant with GI - Distribution-Customer-Service & Info | - | - |
| 49 | 36 | NP_DIS_COTHTOT | Net Plant with GI - Distribution-Customer-Other | 0.00735 | 0.00014 |
| 50 | 37 | NP_PRO_D_GI | Net GI Plant - Production-Demand | 0.05697 | 0.00071 |
| 51 | 38 | NP_PRO_EF_GI | Net GI Plant - Production-Energy-Fuel | - | - |
| 52 | 39 | NP_PRO_ENF_GI | Net GI Plant - Production-Energy-Non-Fuel | - | - |
| 53 | 40 | NP_STO_PRO_D_GI | Net GI Plant - Storage-Production-Demand | - | - |
| 54 | 41 | NP_STO_TRA_D_GI | Net GI Plant - Storage-Transmission-Demand | - | - |
| 55 | 42 | NP_STO_DIS_DSUB_GI | Net GI Plant - Storage-Distribution-Demand-Subs | - | - |
| 56 | 43 | NP_STO_DIS_DPRI_GI | Net GI Plant - Storage-Distribution-Demand-Primary | - | - |
| 57 | 44 | NP_STO_DIS_DSEC_GI | Net GI Plant - Storage-Distribution-Demand-Secondary | - | - |
| 58 | 45 | NP_TRA_D_GI | Net GI Plant - Transmission-Demand | 0.04397 | 0.00064 |
| 59 | 46 | NP_DIS_DSUB_GI | Net GI Plant - Distribution-Demand-Subs | 0.04017 | - |
| 60 | 47 | NP_DIS_DPRI_GI | Net GI Plant - Distribution-Demand-Primary | - | - |
| 61 | 48 | NP_DIS_DSEC_GI | Net GI Plant - Distribution-Demand-Secondary | - | - |
| 62 | 49 | NP_DIS_CSRV_GI | Net GI Plant - Distribution-Customer-Services | - | - |
| 63 | 50 | NP_DIS_CMTR_GI | Net GI Plant - Distribution-Customer-Meters | 0.00008 | 0.00081 |
| 64 | 51 | NP_DIS_CMTRR_GI | Net GI Plant - Distribution-Customer-Meter Reading | 0.00000 | 0.00002 |
| 65 | 52 | NP_DIS_CBIL_GI | Net GI Plant - Distribution-Customer-Billing & Collections | 0.00000 | 0.00002 |
| 66 | 53 | NP_DIS_CINF_GI | Net GI Plant - Distribution-Customer-Service & Info | - | - |
| 67 | 54 | NP_DIS_COTH_GI | Net GI Plant - Distribution-Customer-Other | 0.01408 | 0.00027 |
| 68 | 55 | NP_DIS_SVCSMTRS | Net Plant - Distribution-Customer-Services and Meters | - | - |
| 69 | 56 | 5819_PROD | Accts 581-589 - Production-Demand | - | - |
| 70 | 57 | 5819_PROEF | Accts 581-589 - Production-Energy-Fuel | - | - |
| 71 | 58 | 5819_PROENF | Accts 581-589 - Production-Energy-Non-Fuel | - | - |
| 72 | 59 | 5819_STO_PRO_D | Accts 581-589 - Storage-Production-Demand | - | - |
| 73 | 60 | 5819_STO_TRA_D | Accts 581-589 - Storage-Transmission-Demand | - | - |
| 74 | 61 | 5819_STO_DIS_DSUB | Accts 581-589 - Storage-Distribution-Demand-Subs | - | - |
| 75 | 62 | 5819_STO_DIS_DPRI | Accts 581-589 - Storage-Distribution-Demand-Primary | - | - |
| 1 | 63 | 5819_STO_DIS_DSEC | Accts 581-589 - Storage-Distribution-Demand-Secondary | - | - |

This schedule is sponsored by PNM Witness Larkin

**PUBLIC SERVICE OF NEW MEXICO**
**Test Period Ending September 30th, 2028**

| Class_Factors Line No. | Factor No. | | | Schedule 35B Lg Power Service | Schedule 36B Special Service Rate |
|---|---|---|---|---|---|
| 39 | 26 | NP_STO_DIS_DSECTOT | Net Plant with GI - Storage-Distribution-Demand-Secondary | - | - |
| 40 | 27 | NP_TRA_DTOT | Net Plant with GI - Transmission-Demand | 0.01832 | 0.22744 |
| 41 | 28 | NP_DIS_DSUBTOT | Net Plant with GI - Distribution-Demand-Subs | 0.01866 | - |
| 42 | 29 | NP_DIS_DPRITOT | Net Plant with GI - Distribution-Demand-Primary | - | - |
| 43 | 30 | NP_DIS_DSECTOT | Net Plant with GI - Distribution-Demand-Secondary | - | - |
| 44 | 31 | NP_DIS_CSRVTOT | Net Plant with GI - Distribution-Customer-Services | - | - |
| 45 | 32 | NP_DIS_CMTRTOT | Net Plant with GI - Distribution-Customer-Meters | 0.00040 | 0.00008 |
| 46 | 33 | NP_DIS_CMTRRTOT | Net Plant with GI - Distribution-Customer-Meter Reading | 0.00001 | 0.00000 |
| 47 | 34 | NP_DIS_CBILTOT | Net Plant with GI - Distribution-Customer-Billing & Collections | 0.00001 | 0.00000 |
| 48 | 35 | NP_DIS_CINFTOT | Net Plant with GI - Distribution-Customer-Service & Info | - | - |
| 49 | 36 | NP_DIS_COTHTOT | Net Plant with GI - Distribution-Customer-Other | 0.00307 | 0.01490 |
| 50 | 37 | NP_PRO_D_GI | Net GI Plant - Production-Demand | 0.02397 | - |
| 51 | 38 | NP_PRO_EF_GI | Net GI Plant - Production-Energy-Fuel | - | - |
| 52 | 39 | NP_PRO_ENF_GI | Net GI Plant - Production-Energy-Non-Fuel | - | - |
| 53 | 40 | NP_STO_PRO_D_GI | Net GI Plant - Storage-Production-Demand | - | - |
| 54 | 41 | NP_STO_TRA_D_GI | Net GI Plant - Storage-Transmission-Demand | - | - |
| 55 | 42 | NP_STO_DIS_DSUB_GI | Net GI Plant - Storage-Distribution-Demand-Subs | - | - |
| 56 | 43 | NP_STO_DIS_DPRI_GI | Net GI Plant - Storage-Distribution-Demand-Primary | - | - |
| 57 | 44 | NP_STO_DIS_DSEC_GI | Net GI Plant - Storage-Distribution-Demand-Secondary | - | - |
| 58 | 45 | NP_TRA_D_GI | Net GI Plant - Transmission-Demand | 0.01832 | 0.22744 |
| 59 | 46 | NP_DIS_DSUB_GI | Net GI Plant - Distribution-Demand-Subs | 0.01866 | - |
| 60 | 47 | NP_DIS_DPRI_GI | Net GI Plant - Distribution-Demand-Primary | - | - |
| 61 | 48 | NP_DIS_DSEC_GI | Net GI Plant - Distribution-Demand-Secondary | - | - |
| 62 | 49 | NP_DIS_CSRV_GI | Net GI Plant - Distribution-Customer-Services | - | - |
| 63 | 50 | NP_DIS_CMTR_GI | Net GI Plant - Distribution-Customer-Meters | 0.00040 | 0.00008 |
| 64 | 51 | NP_DIS_CMTRR_GI | Net GI Plant - Distribution-Customer-Meter Reading | 0.00001 | 0.00000 |
| 65 | 52 | NP_DIS_CBIL_GI | Net GI Plant - Distribution-Customer-Billing & Collections | 0.00001 | 0.00000 |
| 66 | 53 | NP_DIS_CINF_GI | Net GI Plant - Distribution-Customer-Service & Info | - | - |
| 67 | 54 | NP_DIS_COTH_GI | Net GI Plant - Distribution-Customer-Other | 0.00589 | 0.02857 |
| 68 | 55 | NP_DIS_SVCSMTRS | Net Plant - Distribution-Customer-Services and Meters | - | - |
| 69 | 56 | 5819_PROD | Accts 581-589 - Production-Demand | - | - |
| 70 | 57 | 5819_PROEF | Accts 581-589 - Production-Energy-Fuel | - | - |
| 71 | 58 | 5819_PROENF | Accts 581-589 - Production-Energy-Non-Fuel | - | - |
| 72 | 59 | 5819_STO_PRO_D | Accts 581-589 - Storage-Production-Demand | - | - |
| 73 | 60 | 5819_STO_TRA_D | Accts 581-589 - Storage-Transmission-Demand | - | - |
| 74 | 61 | 5819_STO_DIS_DSUB | Accts 581-589 - Storage-Distribution-Demand-Subs | - | - |
| 75 | 62 | 5819_STO_DIS_DPRI | Accts 581-589 - Storage-Distribution-Demand-Primary | - | - |
| 1 | 63 | 5819_STO_DIS_DSEC | Accts 581-589 - Storage-Distribution-Demand-Secondary | - | - |

This schedule is sponsored by PNM Witness Larkin

**PUBLIC SERVICE OF NEW MEXICO**
**Test Period Ending September 30th, 2028**

| Class_Factors Line No. | Factor No. | | | Schedule 6 Priv. Area Light | Schedule 20 Streetlighting |
|---|---|---|---|---|---|
| 39 | 26 | NP_STO_DIS_DSECTOT | Net Plant with GI - Storage-Distribution-Demand-Secondary | - | - |
| 40 | 27 | NP_TRA_DTOT | Net Plant with GI - Transmission-Demand | 0.00086 | 0.00132 |
| 41 | 28 | NP_DIS_DSUBTOT | Net Plant with GI - Distribution-Demand-Subs | 0.00177 | 0.00207 |
| 42 | 29 | NP_DIS_DPRITOT | Net Plant with GI - Distribution-Demand-Primary | 0.00189 | 0.00220 |
| 43 | 30 | NP_DIS_DSECTOT | Net Plant with GI - Distribution-Demand-Secondary | 0.00210 | 0.00245 |
| 44 | 31 | NP_DIS_CSRVTOT | Net Plant with GI - Distribution-Customer-Services | - | - |
| 45 | 32 | NP_DIS_CMTRTOT | Net Plant with GI - Distribution-Customer-Meters | - | - |
| 46 | 33 | NP_DIS_CMTRRTOT | Net Plant with GI - Distribution-Customer-Meter Reading | - | - |
| 47 | 34 | NP_DIS_CBILTOT | Net Plant with GI - Distribution-Customer-Billing & Collections | - | - |
| 48 | 35 | NP_DIS_CINFTOT | Net Plant with GI - Distribution-Customer-Service & Info | - | - |
| 49 | 36 | NP_DIS_COTHTOT | Net Plant with GI - Distribution-Customer-Other | 0.00676 | 0.48418 |
| 50 | 37 | NP_PRO_D_GI | Net GI Plant - Production-Demand | 0.00036 | 0.00041 |
| 51 | 38 | NP_PRO_EF_GI | Net GI Plant - Production-Energy-Fuel | - | - |
| 52 | 39 | NP_PRO_ENF_GI | Net GI Plant - Production-Energy-Non-Fuel | - | - |
| 53 | 40 | NP_STO_PRO_D_GI | Net GI Plant - Storage-Production-Demand | - | - |
| 54 | 41 | NP_STO_TRA_D_GI | Net GI Plant - Storage-Transmission-Demand | - | - |
| 55 | 42 | NP_STO_DIS_DSUB_GI | Net GI Plant - Storage-Distribution-Demand-Subs | - | - |
| 56 | 43 | NP_STO_DIS_DPRI_GI | Net GI Plant - Storage-Distribution-Demand-Primary | - | - |
| 57 | 44 | NP_STO_DIS_DSEC_GI | Net GI Plant - Storage-Distribution-Demand-Secondary | - | - |
| 58 | 45 | NP_TRA_D_GI | Net GI Plant - Transmission-Demand | 0.00086 | 0.00132 |
| 59 | 46 | NP_DIS_DSUB_GI | Net GI Plant - Distribution-Demand-Subs | 0.00177 | 0.00207 |
| 60 | 47 | NP_DIS_DPRI_GI | Net GI Plant - Distribution-Demand-Primary | 0.00189 | 0.00220 |
| 61 | 48 | NP_DIS_DSEC_GI | Net GI Plant - Distribution-Demand-Secondary | 0.00210 | 0.00245 |
| 62 | 49 | NP_DIS_CSRV_GI | Net GI Plant - Distribution-Customer-Services | - | - |
| 63 | 50 | NP_DIS_CMTR_GI | Net GI Plant - Distribution-Customer-Meters | - | - |
| 64 | 51 | NP_DIS_CMTRR_GI | Net GI Plant - Distribution-Customer-Meter Reading | - | - |
| 65 | 52 | NP_DIS_CBIL_GI | Net GI Plant - Distribution-Customer-Billing & Collections | - | - |
| 66 | 53 | NP_DIS_CINF_GI | Net GI Plant - Distribution-Customer-Service & Info | - | - |
| 67 | 54 | NP_DIS_COTH_GI | Net GI Plant - Distribution-Customer-Other | 0.00460 | 0.01959 |
| 68 | 55 | NP_DIS_SVCSMTRS | Net Plant - Distribution-Customer-Services and Meters | - | - |
| 69 | 56 | 5819_PROD | Accts 581-589 - Production-Demand | - | - |
| 70 | 57 | 5819_PROEF | Accts 581-589 - Production-Energy-Fuel | - | - |
| 71 | 58 | 5819_PROENF | Accts 581-589 - Production-Energy-Non-Fuel | - | - |
| 72 | 59 | 5819_STO_PRO_D | Accts 581-589 - Storage-Production-Demand | - | - |
| 73 | 60 | 5819_STO_TRA_D | Accts 581-589 - Storage-Transmission-Demand | - | - |
| 74 | 61 | 5819_STO_DIS_DSUB | Accts 581-589 - Storage-Distribution-Demand-Subs | - | - |
| 75 | 62 | 5819_STO_DIS_DPRI | Accts 581-589 - Storage-Distribution-Demand-Primary | - | - |
| 1 | 63 | 5819_STO_DIS_DSEC | Accts 581-589 - Storage-Distribution-Demand-Secondary | - | - |

This schedule is sponsored by PNM Witness Larkin

**PUBLIC SERVICE OF NEW MEXICO**
**Test Period Ending September 30th, 2028**

| Line No. | Factor No. | Class_Factors | | dule 20-Customer O |
|---|---|---|---|---|
| | | | | Streetlighting |
| 39 | 26 | NP_STO_DIS_DSECTOT | Net Plant with GI - Storage-Distribution-Demand-Secondary | - |
| 40 | 27 | NP_TRA_DTOT | Net Plant with GI - Transmission-Demand | 0.00099 |
| 41 | 28 | NP_DIS_DSUBTOT | Net Plant with GI - Distribution-Demand-Subs | 0.00278 |
| 42 | 29 | NP_DIS_DPRITOT | Net Plant with GI - Distribution-Demand-Primary | 0.00295 |
| 43 | 30 | NP_DIS_DSECTOT | Net Plant with GI - Distribution-Demand-Secondary | 0.00328 |
| 44 | 31 | NP_DIS_CSRVTOT | Net Plant with GI - Distribution-Customer-Services | - |
| 45 | 32 | NP_DIS_CMTRTOT | Net Plant with GI - Distribution-Customer-Meters | - |
| 46 | 33 | NP_DIS_CMTRRTOT | Net Plant with GI - Distribution-Customer-Meter Reading | - |
| 47 | 34 | NP_DIS_CBILTOT | Net Plant with GI - Distribution-Customer-Billing & Collections | - |
| 48 | 35 | NP_DIS_CINFTOT | Net Plant with GI - Distribution-Customer-Service & Info | - |
| 49 | 36 | NP_DIS_COTHTOT | Net Plant with GI - Distribution-Customer-Other | 0.00018 |
| 50 | 37 | NP_PRO_D_GI | Net GI Plant - Production-Demand | 0.00055 |
| 51 | 38 | NP_PRO_EF_GI | Net GI Plant - Production-Energy-Fuel | - |
| 52 | 39 | NP_PRO_ENF_GI | Net GI Plant - Production-Energy-Non-Fuel | - |
| 53 | 40 | NP_STO_PRO_D_GI | Net GI Plant - Storage-Production-Demand | - |
| 54 | 41 | NP_STO_TRA_D_GI | Net GI Plant - Storage-Transmission-Demand | - |
| 55 | 42 | NP_STO_DIS_DSUB_GI | Net GI Plant - Storage-Distribution-Demand-Subs | - |
| 56 | 43 | NP_STO_DIS_DPRI_GI | Net GI Plant - Storage-Distribution-Demand-Primary | - |
| 57 | 44 | NP_STO_DIS_DSEC_GI | Net GI Plant - Storage-Distribution-Demand-Secondary | - |
| 58 | 45 | NP_TRA_D_GI | Net GI Plant - Transmission-Demand | 0.00099 |
| 59 | 46 | NP_DIS_DSUB_GI | Net GI Plant - Distribution-Demand-Subs | 0.00278 |
| 60 | 47 | NP_DIS_DPRI_GI | Net GI Plant - Distribution-Demand-Primary | 0.00295 |
| 61 | 48 | NP_DIS_DSEC_GI | Net GI Plant - Distribution-Demand-Secondary | 0.00328 |
| 62 | 49 | NP_DIS_CSRV_GI | Net GI Plant - Distribution-Customer-Services | - |
| 63 | 50 | NP_DIS_CMTR_GI | Net GI Plant - Distribution-Customer-Meters | - |
| 64 | 51 | NP_DIS_CMTRR_GI | Net GI Plant - Distribution-Customer-Meter Reading | - |
| 65 | 52 | NP_DIS_CBIL_GI | Net GI Plant - Distribution-Customer-Billing & Collections | - |
| 66 | 53 | NP_DIS_CINF_GI | Net GI Plant - Distribution-Customer-Service & Info | - |
| 67 | 54 | NP_DIS_COTH_GI | Net GI Plant - Distribution-Customer-Other | 0.00034 |
| 68 | 55 | NP_DIS_SVCSMTRS | Net Plant - Distribution-Customer-Services and Meters | - |
| 69 | 56 | 5819_PROD | Accts 581-589 - Production-Demand | - |
| 70 | 57 | 5819_PROEF | Accts 581-589 - Production-Energy-Fuel | - |
| 71 | 58 | 5819_PROENF | Accts 581-589 - Production-Energy-Non-Fuel | - |
| 72 | 59 | 5819_STO_PRO_D | Accts 581-589 - Storage-Production-Demand | - |
| 73 | 60 | 5819_STO_TRA_D | Accts 581-589 - Storage-Transmission-Demand | - |
| 74 | 61 | 5819_STO_DIS_DSUB | Accts 581-589 - Storage-Distribution-Demand-Subs | - |
| 75 | 62 | 5819_STO_DIS_DPRI | Accts 581-589 - Storage-Distribution-Demand-Primary | - |
| 1 | 63 | 5819_STO_DIS_DSEC | Accts 581-589 - Storage-Distribution-Demand-Secondary | - |

This schedule is sponsored by PNM Witness Larkin

**PUBLIC SERVICE OF NEW MEXICO**
**Test Period Ending September 30th, 2028**

| Line No. | Class_Factors Factor No. | | | Other Input |
|---|---|---|---|---|
| 2 | 64 | 5819_TRAD | Accts 581-589 - Transmission-Demand | |
| 3 | 65 | 5819_DISDSUB | Accts 581-589 - Distribution-Demand-Subs | |
| 4 | 66 | 5819_DISDPRI | Accts 581-589 - Distribution-Demand-Primary | |
| 5 | 67 | 5819_DISDSEC | Accts 581-589 - Distribution-Demand-Secondary | |
| 6 | 68 | 5819_DISCSRV | Accts 581-589 - Distribution-Customer-Services | |
| 7 | 69 | 5819_DISCMTR | Accts 581-589 - Distribution-Customer-Meters | |
| 8 | 70 | 5819_DISCMTRR | Accts 581-589 - Distribution-Customer-Meter Reading | |
| 9 | 71 | 5819_DISCBIL | Accts 581-589 - Distribution-Customer-Billing & Collections | |
| 10 | 72 | 5819_DISCINF | Accts 581-589 - Distribution-Customer-Service & Info | |
| 11 | 73 | 5819_DISCOTH | Accts 581-589 - Distribution-Customer-Other | |
| 12 | 74 | 5918_PROD | Accts 591-598 - Production-Demand | |
| 13 | 75 | 5918_PROEF | Accts 591-598 - Production-Energy-Fuel | |
| 14 | 76 | 5918_PROENF | Accts 591-598 - Production-Energy-Non-Fuel | |
| 15 | 77 | 5918_STO_PRO_D | Accts 591-598 - Storage-Production-Demand | |
| 16 | 78 | 5918_STO_TRA_D | Accts 591-598 - Storage-Transmission-Demand | |
| 17 | 79 | 5918_STO_DIS_DSUB | Accts 591-598 - Storage-Distribution-Demand-Subs | |
| 18 | 80 | 5918_STO_DIS_DPRI | Accts 591-598 - Storage-Distribution-Demand-Primary | |
| 19 | 81 | 5918_STO_DIS_DSEC | Accts 591-598 - Storage-Distribution-Demand-Secondary | |
| 20 | 82 | 5918_TRAD | Accts 591-598 - Transmission-Demand | |
| 21 | 83 | 5918_DISDSUB | Accts 591-598 - Distribution-Demand-Subs | |
| 22 | 84 | 5918_DISDPRI | Accts 591-598 - Distribution-Demand-Primary | |
| 23 | 85 | 5918_DISDSEC | Accts 591-598 - Distribution-Demand-Secondary | |
| 24 | 86 | 5918_DISCSRV | Accts 591-598 - Distribution-Customer-Services | |
| 25 | 87 | 5918_DISCMTR | Accts 591-598 - Distribution-Customer-Meters | |
| 26 | 88 | 5918_DISCMTRR | Accts 591-598 - Distribution-Customer-Meter Reading | |
| 27 | 89 | 5918_DISCBIL | Accts 591-598 - Distribution-Customer-Billing & Collections | |
| 28 | 90 | 5918_DISCINF | Accts 591-598 - Distribution-Customer-Service & Info | |
| 29 | 91 | 5918_DISCOTH | Accts 591-598 - Distribution-Customer-Other | |
| 30 | 92 | CACT_DISCMTRR | Cust Accts - Distribution-Customer-Meter Reading | |
| 31 | 93 | CACT_DISCBIL | Cust Accts - Distribution-Customer-Billing & Collections | |
| 32 | 94 | CACT_DISCINF | Cust Accts - Distribution-Customer-Service & Info | |
| 33 | 95 | CACT_DISCOTH | Cust Accts - Distribution-Customer-Other | |
| 34 | 96 | LA_PROD | Labor - Production-Demand | |
| 35 | 97 | LA_PROEF | Labor - Production-Energy-Fuel | |
| 36 | 98 | LA_PROENF | Labor - Production-Energy-Non-Fuel | |
| 37 | 99 | LA_STO_PRO_D | Labor - Storage-Production-Demand | |
| 38 | 100 | LA_STO_TRA_D | Labor - Storage-Transmission-Demand | |
| 39 | 101 | LA_STO_DIS_DSUB | Labor - Storage-Distribution-Demand-Subs | |
| 40 | 102 | LA_STO_DIS_DPRI | Labor - Storage-Distribution-Demand-Primary | |

This schedule is sponsored by PNM Witness Larkin

**PUBLIC SERVICE OF NEW MEXICO**
**Test Period Ending September 30th, 2028**

| Class_Factors Line No. | Factor No. | | | Schedule 1 PNM Retail | Schedule 1 Residential |
|---|---|---|---|---|---|
| 2 | 64 | 5819_TRAD | Accts 581-589 - Transmission-Demand | - | - |
| 3 | 65 | 5819_DISDSUB | Accts 581-589 - Distribution-Demand-Subs | 1.00000 | 0.50167 |
| 4 | 66 | 5819_DISDPRI | Accts 581-589 - Distribution-Demand-Primary | 1.00000 | 0.53302 |
| 5 | 67 | 5819_DISDSEC | Accts 581-589 - Distribution-Demand-Secondary | 1.00000 | 0.59278 |
| 6 | 68 | 5819_DISCSRV | Accts 581-589 - Distribution-Customer-Services | 1.00000 | 0.91879 |
| 7 | 69 | 5819_DISCMTR | Accts 581-589 - Distribution-Customer-Meters | 1.00000 | 0.69636 |
| 8 | 70 | 5819_DISCMTRR | Accts 581-589 - Distribution-Customer-Meter Reading | - | - |
| 9 | 71 | 5819_DISCBIL | Accts 581-589 - Distribution-Customer-Billing & Collections | - | - |
| 10 | 72 | 5819_DISCINF | Accts 581-589 - Distribution-Customer-Service & Info | - | - |
| 11 | 73 | 5819_DISCOTH | Accts 581-589 - Distribution-Customer-Other | 1.00000 | 0.39226 |
| 12 | 74 | 5918_PROD | Accts 591-598 - Production-Demand | - | - |
| 13 | 75 | 5918_PROEF | Accts 591-598 - Production-Energy-Fuel | - | - |
| 14 | 76 | 5918_PROENF | Accts 591-598 - Production-Energy-Non-Fuel | - | - |
| 15 | 77 | 5918_STO_PRO_D | Accts 591-598 - Storage-Production-Demand | - | - |
| 16 | 78 | 5918_STO_TRA_D | Accts 591-598 - Storage-Transmission-Demand | - | - |
| 17 | 79 | 5918_STO_DIS_DSUB | Accts 591-598 - Storage-Distribution-Demand-Subs | - | - |
| 18 | 80 | 5918_STO_DIS_DPRI | Accts 591-598 - Storage-Distribution-Demand-Primary | - | - |
| 19 | 81 | 5918_STO_DIS_DSEC | Accts 591-598 - Storage-Distribution-Demand-Secondary | - | - |
| 20 | 82 | 5918_TRAD | Accts 591-598 - Transmission-Demand | - | - |
| 21 | 83 | 5918_DISDSUB | Accts 591-598 - Distribution-Demand-Subs | 1.00000 | 0.50167 |
| 22 | 84 | 5918_DISDPRI | Accts 591-598 - Distribution-Demand-Primary | 1.00000 | 0.53302 |
| 23 | 85 | 5918_DISDSEC | Accts 591-598 - Distribution-Demand-Secondary | 1.00000 | 0.59278 |
| 24 | 86 | 5918_DISCSRV | Accts 591-598 - Distribution-Customer-Services | 1.00000 | 0.91879 |
| 25 | 87 | 5918_DISCMTR | Accts 591-598 - Distribution-Customer-Meters | 1.00000 | 0.69636 |
| 26 | 88 | 5918_DISCMTRR | Accts 591-598 - Distribution-Customer-Meter Reading | - | - |
| 27 | 89 | 5918_DISCBIL | Accts 591-598 - Distribution-Customer-Billing & Collections | - | - |
| 28 | 90 | 5918_DISCINF | Accts 591-598 - Distribution-Customer-Service & Info | - | - |
| 29 | 91 | 5918_DISCOTH | Accts 591-598 - Distribution-Customer-Other | 1.00000 | 0.39226 |
| 30 | 92 | CACT_DISCMTRR | Cust Accts - Distribution-Customer-Meter Reading | 1.00000 | 0.87976 |
| 31 | 93 | CACT_DISCBIL | Cust Accts - Distribution-Customer-Billing & Collections | 1.00000 | 0.87976 |
| 32 | 94 | CACT_DISCINF | Cust Accts - Distribution-Customer-Service & Info | - | - |
| 33 | 95 | CACT_DISCOTH | Cust Accts - Distribution-Customer-Other | 1.00000 | 0.77018 |
| 34 | 96 | LA_PROD | Labor - Production-Demand | 1.00000 | 0.48544 |
| 35 | 97 | LA_PROEF | Labor - Production-Energy-Fuel | - | - |
| 36 | 98 | LA_PROENF | Labor - Production-Energy-Non-Fuel | - | - |
| 37 | 99 | LA_STO_PRO_D | Labor - Storage-Production-Demand | - | - |
| 38 | 100 | LA_STO_TRA_D | Labor - Storage-Transmission-Demand | - | - |
| 39 | 101 | LA_STO_DIS_DSUB | Labor - Storage-Distribution-Demand-Subs | - | - |
| 40 | 102 | LA_STO_DIS_DPRI | Labor - Storage-Distribution-Demand-Primary | - | - |

This schedule is sponsored by PNM Witness Larkin

**PUBLIC SERVICE OF NEW MEXICO**
**Test Period Ending September 30th, 2028**

| Line No. | Class_Factors Factor No. | | | Schedule 1B Residential | Schedule 2 Small Power |
|---|---|---|---|---|---|
| 2 | 64 | 5819_TRAD | Accts 581-589 - Transmission-Demand | - | - |
| 3 | 65 | 5819_DISDSUB | Accts 581-589 - Distribution-Demand-Subs | 0.00555 | 0.12171 |
| 4 | 66 | 5819_DISDPRI | Accts 581-589 - Distribution-Demand-Primary | 0.00590 | 0.12931 |
| 5 | 67 | 5819_DISDSEC | Accts 581-589 - Distribution-Demand-Secondary | 0.00656 | 0.14381 |
| 6 | 68 | 5819_DISCSRV | Accts 581-589 - Distribution-Customer-Services | 0.01481 | 0.06577 |
| 7 | 69 | 5819_DISCMTR | Accts 581-589 - Distribution-Customer-Meters | 0.01123 | 0.19418 |
| 8 | 70 | 5819_DISCMTRR | Accts 581-589 - Distribution-Customer-Meter Reading | - | - |
| 9 | 71 | 5819_DISCBIL | Accts 581-589 - Distribution-Customer-Billing & Collections | - | - |
| 10 | 72 | 5819_DISCINF | Accts 581-589 - Distribution-Customer-Service & Info | - | - |
| 11 | 73 | 5819_DISCOTH | Accts 581-589 - Distribution-Customer-Other | 0.00615 | 0.04880 |
| 12 | 74 | 5918_PROD | Accts 591-598 - Production-Demand | - | - |
| 13 | 75 | 5918_PROEF | Accts 591-598 - Production-Energy-Fuel | - | - |
| 14 | 76 | 5918_PROENF | Accts 591-598 - Production-Energy-Non-Fuel | - | - |
| 15 | 77 | 5918_STO_PRO_D | Accts 591-598 - Storage-Production-Demand | - | - |
| 16 | 78 | 5918_STO_TRA_D | Accts 591-598 - Storage-Transmission-Demand | - | - |
| 17 | 79 | 5918_STO_DIS_DSUB | Accts 591-598 - Storage-Distribution-Demand-Subs | - | - |
| 18 | 80 | 5918_STO_DIS_DPRI | Accts 591-598 - Storage-Distribution-Demand-Primary | - | - |
| 19 | 81 | 5918_STO_DIS_DSEC | Accts 591-598 - Storage-Distribution-Demand-Secondary | - | - |
| 20 | 82 | 5918_TRAD | Accts 591-598 - Transmission-Demand | - | - |
| 21 | 83 | 5918_DISDSUB | Accts 591-598 - Distribution-Demand-Subs | 0.00555 | 0.12171 |
| 22 | 84 | 5918_DISDPRI | Accts 591-598 - Distribution-Demand-Primary | 0.00590 | 0.12931 |
| 23 | 85 | 5918_DISDSEC | Accts 591-598 - Distribution-Demand-Secondary | 0.00656 | 0.14381 |
| 24 | 86 | 5918_DISCSRV | Accts 591-598 - Distribution-Customer-Services | 0.01481 | 0.06577 |
| 25 | 87 | 5918_DISCMTR | Accts 591-598 - Distribution-Customer-Meters | 0.01123 | 0.19418 |
| 26 | 88 | 5918_DISCMTRR | Accts 591-598 - Distribution-Customer-Meter Reading | - | - |
| 27 | 89 | 5918_DISCBIL | Accts 591-598 - Distribution-Customer-Billing & Collections | - | - |
| 28 | 90 | 5918_DISCINF | Accts 591-598 - Distribution-Customer-Service & Info | - | - |
| 29 | 91 | 5918_DISCOTH | Accts 591-598 - Distribution-Customer-Other | 0.00615 | 0.04880 |
| 30 | 92 | CACT_DISCMTRR | Cust Accts - Distribution-Customer-Meter Reading | 0.01418 | 0.09645 |
| 31 | 93 | CACT_DISCBIL | Cust Accts - Distribution-Customer-Billing & Collections | 0.01418 | 0.09645 |
| 32 | 94 | CACT_DISCINF | Cust Accts - Distribution-Customer-Service & Info | - | - |
| 33 | 95 | CACT_DISCOTH | Cust Accts - Distribution-Customer-Other | 0.01208 | 0.09582 |
| 34 | 96 | LA_PROD | Labor - Production-Demand | 0.00524 | 0.10730 |
| 35 | 97 | LA_PROEF | Labor - Production-Energy-Fuel | - | - |
| 36 | 98 | LA_PROENF | Labor - Production-Energy-Non-Fuel | - | - |
| 37 | 99 | LA_STO_PRO_D | Labor - Storage-Production-Demand | - | - |
| 38 | 100 | LA_STO_TRA_D | Labor - Storage-Transmission-Demand | - | - |
| 39 | 101 | LA_STO_DIS_DSUB | Labor - Storage-Distribution-Demand-Subs | - | - |
| 40 | 102 | LA_STO_DIS_DPRI | Labor - Storage-Distribution-Demand-Primary | - | - |

This schedule is sponsored by PNM Witness Larkin

**PUBLIC SERVICE OF NEW MEXICO**
**Test Period Ending September 30th, 2028**

| Class_Factors Line No. | Factor No. | | | Schedule 2B Small Power | Schedule 3B General Power |
|---|---|---|---|---|---|
| 2 | 64 | 5819_TRAD | Accts 581-589 - Transmission-Demand | - | - |
| 3 | 65 | 5819_DISDSUB | Accts 581-589 - Distribution-Demand-Subs | 0.00161 | 0.14523 |
| 4 | 66 | 5819_DISDPRI | Accts 581-589 - Distribution-Demand-Primary | 0.00171 | 0.15431 |
| 5 | 67 | 5819_DISDSEC | Accts 581-589 - Distribution-Demand-Secondary | 0.00191 | 0.17161 |
| 6 | 68 | 5819_DISCSRV | Accts 581-589 - Distribution-Customer-Services | 0.00062 | - |
| 7 | 69 | 5819_DISCMTR | Accts 581-589 - Distribution-Customer-Meters | 0.00184 | 0.04395 |
| 8 | 70 | 5819_DISCMTRR | Accts 581-589 - Distribution-Customer-Meter Reading | - | - |
| 9 | 71 | 5819_DISCBIL | Accts 581-589 - Distribution-Customer-Billing & Collections | - | - |
| 10 | 72 | 5819_DISCINF | Accts 581-589 - Distribution-Customer-Service & Info | - | - |
| 11 | 73 | 5819_DISCOTH | Accts 581-589 - Distribution-Customer-Other | 0.00050 | 0.01640 |
| 12 | 74 | 5918_PROD | Accts 591-598 - Production-Demand | - | - |
| 13 | 75 | 5918_PROEF | Accts 591-598 - Production-Energy-Fuel | - | - |
| 14 | 76 | 5918_PROENF | Accts 591-598 - Production-Energy-Non-Fuel | - | - |
| 15 | 77 | 5918_STO_PRO_D | Accts 591-598 - Storage-Production-Demand | - | - |
| 16 | 78 | 5918_STO_TRA_D | Accts 591-598 - Storage-Transmission-Demand | - | - |
| 17 | 79 | 5918_STO_DIS_DSUB | Accts 591-598 - Storage-Distribution-Demand-Subs | - | - |
| 18 | 80 | 5918_STO_DIS_DPRI | Accts 591-598 - Storage-Distribution-Demand-Primary | - | - |
| 19 | 81 | 5918_STO_DIS_DSEC | Accts 591-598 - Storage-Distribution-Demand-Secondary | - | - |
| 20 | 82 | 5918_TRAD | Accts 591-598 - Transmission-Demand | - | - |
| 21 | 83 | 5918_DISDSUB | Accts 591-598 - Distribution-Demand-Subs | 0.00161 | 0.14523 |
| 22 | 84 | 5918_DISDPRI | Accts 591-598 - Distribution-Demand-Primary | 0.00171 | 0.15431 |
| 23 | 85 | 5918_DISDSEC | Accts 591-598 - Distribution-Demand-Secondary | 0.00191 | 0.17161 |
| 24 | 86 | 5918_DISCSRV | Accts 591-598 - Distribution-Customer-Services | 0.00062 | - |
| 25 | 87 | 5918_DISCMTR | Accts 591-598 - Distribution-Customer-Meters | 0.00184 | 0.04395 |
| 26 | 88 | 5918_DISCMTRR | Accts 591-598 - Distribution-Customer-Meter Reading | - | - |
| 27 | 89 | 5918_DISCBIL | Accts 591-598 - Distribution-Customer-Billing & Collections | - | - |
| 28 | 90 | 5918_DISCINF | Accts 591-598 - Distribution-Customer-Service & Info | - | - |
| 29 | 91 | 5918_DISCOTH | Accts 591-598 - Distribution-Customer-Other | 0.00050 | 0.01640 |
| 30 | 92 | CACT_DISCMTRR | Cust Accts - Distribution-Customer-Meter Reading | 0.00091 | 0.00493 |
| 31 | 93 | CACT_DISCBIL | Cust Accts - Distribution-Customer-Billing & Collections | 0.00091 | 0.00493 |
| 32 | 94 | CACT_DISCINF | Cust Accts - Distribution-Customer-Service & Info | - | - |
| 33 | 95 | CACT_DISCOTH | Cust Accts - Distribution-Customer-Other | 0.00099 | 0.03220 |
| 34 | 96 | LA_PROD | Labor - Production-Demand | 0.00141 | 0.15830 |
| 35 | 97 | LA_PROEF | Labor - Production-Energy-Fuel | - | - |
| 36 | 98 | LA_PROENF | Labor - Production-Energy-Non-Fuel | - | - |
| 37 | 99 | LA_STO_PRO_D | Labor - Storage-Production-Demand | - | - |
| 38 | 100 | LA_STO_TRA_D | Labor - Storage-Transmission-Demand | - | - |
| 39 | 101 | LA_STO_DIS_DSUB | Labor - Storage-Distribution-Demand-Subs | - | - |
| 40 | 102 | LA_STO_DIS_DPRI | Labor - Storage-Distribution-Demand-Primary | - | - |

This schedule is sponsored by PNM Witness Larkin

**PUBLIC SERVICE OF NEW MEXICO**
**Test Period Ending September 30th, 2028**

| Class_Factors Line No. | Factor No. | | | Schedule 3C GP Low LF | Schedule 3D General Power Gov |
|---|---|---|---|---|---|
| 2 | 64 | 5819_TRAD | Accts 581-589 - Transmission-Demand | - | - |
| 3 | 65 | 5819_DISDSUB | Accts 581-589 - Distribution-Demand-Subs | 0.04558 | 0.01041 |
| 4 | 66 | 5819_DISDPRI | Accts 581-589 - Distribution-Demand-Primary | 0.04843 | 0.01106 |
| 5 | 67 | 5819_DISDSEC | Accts 581-589 - Distribution-Demand-Secondary | 0.05386 | 0.01230 |
| 6 | 68 | 5819_DISCSRV | Accts 581-589 - Distribution-Customer-Services | - | - |
| 7 | 69 | 5819_DISCMTR | Accts 581-589 - Distribution-Customer-Meters | 0.01987 | 0.00261 |
| 8 | 70 | 5819_DISCMTRR | Accts 581-589 - Distribution-Customer-Meter Reading | - | - |
| 9 | 71 | 5819_DISCBIL | Accts 581-589 - Distribution-Customer-Billing & Collections | - | - |
| 10 | 72 | 5819_DISCINF | Accts 581-589 - Distribution-Customer-Service & Info | - | - |
| 11 | 73 | 5819_DISCOTH | Accts 581-589 - Distribution-Customer-Other | 0.00453 | 0.00122 |
| 12 | 74 | 5918_PROD | Accts 591-598 - Production-Demand | - | - |
| 13 | 75 | 5918_PROEF | Accts 591-598 - Production-Energy-Fuel | - | - |
| 14 | 76 | 5918_PROENF | Accts 591-598 - Production-Energy-Non-Fuel | - | - |
| 15 | 77 | 5918_STO_PRO_D | Accts 591-598 - Storage-Production-Demand | - | - |
| 16 | 78 | 5918_STO_TRA_D | Accts 591-598 - Storage-Transmission-Demand | - | - |
| 17 | 79 | 5918_STO_DIS_DSUB | Accts 591-598 - Storage-Distribution-Demand-Subs | - | - |
| 18 | 80 | 5918_STO_DIS_DPRI | Accts 591-598 - Storage-Distribution-Demand-Primary | - | - |
| 19 | 81 | 5918_STO_DIS_DSEC | Accts 591-598 - Storage-Distribution-Demand-Secondary | - | - |
| 20 | 82 | 5918_TRAD | Accts 591-598 - Transmission-Demand | - | - |
| 21 | 83 | 5918_DISDSUB | Accts 591-598 - Distribution-Demand-Subs | 0.04558 | 0.01041 |
| 22 | 84 | 5918_DISDPRI | Accts 591-598 - Distribution-Demand-Primary | 0.04843 | 0.01106 |
| 23 | 85 | 5918_DISDSEC | Accts 591-598 - Distribution-Demand-Secondary | 0.05386 | 0.01230 |
| 24 | 86 | 5918_DISCSRV | Accts 591-598 - Distribution-Customer-Services | - | - |
| 25 | 87 | 5918_DISCMTR | Accts 591-598 - Distribution-Customer-Meters | 0.01987 | 0.00261 |
| 26 | 88 | 5918_DISCMTRR | Accts 591-598 - Distribution-Customer-Meter Reading | - | - |
| 27 | 89 | 5918_DISCBIL | Accts 591-598 - Distribution-Customer-Billing & Collections | - | - |
| 28 | 90 | 5918_DISCINF | Accts 591-598 - Distribution-Customer-Service & Info | - | - |
| 29 | 91 | 5918_DISCOTH | Accts 591-598 - Distribution-Customer-Other | 0.00453 | 0.00122 |
| 30 | 92 | CACT_DISCMTRR | Cust Accts - Distribution-Customer-Meter Reading | 0.00223 | 0.00029 |
| 31 | 93 | CACT_DISCBIL | Cust Accts - Distribution-Customer-Billing & Collections | 0.00223 | 0.00029 |
| 32 | 94 | CACT_DISCINF | Cust Accts - Distribution-Customer-Service & Info | - | - |
| 33 | 95 | CACT_DISCOTH | Cust Accts - Distribution-Customer-Other | 0.00889 | 0.00239 |
| 34 | 96 | LA_PROD | Labor - Production-Demand | 0.03644 | 0.01104 |
| 35 | 97 | LA_PROEF | Labor - Production-Energy-Fuel | - | - |
| 36 | 98 | LA_PROENF | Labor - Production-Energy-Non-Fuel | - | - |
| 37 | 99 | LA_STO_PRO_D | Labor - Storage-Production-Demand | - | - |
| 38 | 100 | LA_STO_TRA_D | Labor - Storage-Transmission-Demand | - | - |
| 39 | 101 | LA_STO_DIS_DSUB | Labor - Storage-Distribution-Demand-Subs | - | - |
| 40 | 102 | LA_STO_DIS_DPRI | Labor - Storage-Distribution-Demand-Primary | - | - |

This schedule is sponsored by PNM Witness Larkin

**PUBLIC SERVICE OF NEW MEXICO**
**Test Period Ending September 30th, 2028**

| Class_Factors Line No. | Factor No. | | | Schedule 3E GP Low LF Gov |
|---|---|---|---|---|
| 2 | 64 | 5819_TRAD | Accts 581-589 - Transmission-Demand | - |
| 3 | 65 | 5819_DISDSUB | Accts 581-589 - Distribution-Demand-Subs | 0.00294 |
| 4 | 66 | 5819_DISDPRI | Accts 581-589 - Distribution-Demand-Primary | 0.00313 |
| 5 | 67 | 5819_DISDSEC | Accts 581-589 - Distribution-Demand-Secondary | 0.00348 |
| 6 | 68 | 5819_DISCSRV | Accts 581-589 - Distribution-Customer-Services | - |
| 7 | 69 | 5819_DISCMTR | Accts 581-589 - Distribution-Customer-Meters | 0.00114 |
| 8 | 70 | 5819_DISCMTRR | Accts 581-589 - Distribution-Customer-Meter Reading | - |
| 9 | 71 | 5819_DISCBIL | Accts 581-589 - Distribution-Customer-Billing & Collections | - |
| 10 | 72 | 5819_DISCINF | Accts 581-589 - Distribution-Customer-Service & Info | - |
| 11 | 73 | 5819_DISCOTH | Accts 581-589 - Distribution-Customer-Other | 0.00028 |
| 12 | 74 | 5918_PROD | Accts 591-598 - Production-Demand | - |
| 13 | 75 | 5918_PROEF | Accts 591-598 - Production-Energy-Fuel | - |
| 14 | 76 | 5918_PROENF | Accts 591-598 - Production-Energy-Non-Fuel | - |
| 15 | 77 | 5918_STO_PRO_D | Accts 591-598 - Storage-Production-Demand | - |
| 16 | 78 | 5918_STO_TRA_D | Accts 591-598 - Storage-Transmission-Demand | - |
| 17 | 79 | 5918_STO_DIS_DSUB | Accts 591-598 - Storage-Distribution-Demand-Subs | - |
| 18 | 80 | 5918_STO_DIS_DPRI | Accts 591-598 - Storage-Distribution-Demand-Primary | - |
| 19 | 81 | 5918_STO_DIS_DSEC | Accts 591-598 - Storage-Distribution-Demand-Secondary | - |
| 20 | 82 | 5918_TRAD | Accts 591-598 - Transmission-Demand | - |
| 21 | 83 | 5918_DISDSUB | Accts 591-598 - Distribution-Demand-Subs | 0.00294 |
| 22 | 84 | 5918_DISDPRI | Accts 591-598 - Distribution-Demand-Primary | 0.00313 |
| 23 | 85 | 5918_DISDSEC | Accts 591-598 - Distribution-Demand-Secondary | 0.00348 |
| 24 | 86 | 5918_DISCSRV | Accts 591-598 - Distribution-Customer-Services | - |
| 25 | 87 | 5918_DISCMTR | Accts 591-598 - Distribution-Customer-Meters | 0.00114 |
| 26 | 88 | 5918_DISCMTRR | Accts 591-598 - Distribution-Customer-Meter Reading | - |
| 27 | 89 | 5918_DISCBIL | Accts 591-598 - Distribution-Customer-Billing & Collections | - |
| 28 | 90 | 5918_DISCINF | Accts 591-598 - Distribution-Customer-Service & Info | - |
| 29 | 91 | 5918_DISCOTH | Accts 591-598 - Distribution-Customer-Other | 0.00028 |
| 30 | 92 | CACT_DISCMTRR | Cust Accts - Distribution-Customer-Meter Reading | 0.00013 |
| 31 | 93 | CACT_DISCBIL | Cust Accts - Distribution-Customer-Billing & Collections | 0.00013 |
| 32 | 94 | CACT_DISCINF | Cust Accts - Distribution-Customer-Service & Info | - |
| 33 | 95 | CACT_DISCOTH | Cust Accts - Distribution-Customer-Other | 0.00056 |
| 34 | 96 | LA_PROD | Labor - Production-Demand | 0.00233 |
| 35 | 97 | LA_PROEF | Labor - Production-Energy-Fuel | - |
| 36 | 98 | LA_PROENF | Labor - Production-Energy-Non-Fuel | - |
| 37 | 99 | LA_STO_PRO_D | Labor - Storage-Production-Demand | - |
| 38 | 100 | LA_STO_TRA_D | Labor - Storage-Transmission-Demand | - |
| 39 | 101 | LA_STO_DIS_DSUB | Labor - Storage-Distribution-Demand-Subs | - |
| 40 | 102 | LA_STO_DIS_DPRI | Labor - Storage-Distribution-Demand-Primary | - |

This schedule is sponsored by PNM Witness Larkin

**PUBLIC SERVICE OF NEW MEXICO**
**Test Period Ending September 30th, 2028**

| Class_Factors Line No. | Factor No. | | | Schedule 3F GP Charging Stations | Schedule 4 Large Power |
|---|---|---|---|---|---|
| 2 | 64 | 5819_TRAD | Accts 581-589 - Transmission-Demand | - | - |
| 3 | 65 | 5819_DISDSUB | Accts 581-589 - Distribution-Demand-Subs | 0.00196 | 0.07557 |
| 4 | 66 | 5819_DISDPRI | Accts 581-589 - Distribution-Demand-Primary | 0.00208 | 0.08029 |
| 5 | 67 | 5819_DISDSEC | Accts 581-589 - Distribution-Demand-Secondary | 0.00231 | - |
| 6 | 68 | 5819_DISCSRV | Accts 581-589 - Distribution-Customer-Services | - | - |
| 7 | 69 | 5819_DISCMTR | Accts 581-589 - Distribution-Customer-Meters | 0.00035 | 0.01283 |
| 8 | 70 | 5819_DISCMTRR | Accts 581-589 - Distribution-Customer-Meter Reading | - | - |
| 9 | 71 | 5819_DISCBIL | Accts 581-589 - Distribution-Customer-Billing & Collections | - | - |
| 10 | 72 | 5819_DISCINF | Accts 581-589 - Distribution-Customer-Service & Info | - | - |
| 11 | 73 | 5819_DISCOTH | Accts 581-589 - Distribution-Customer-Other | 0.00012 | 0.01018 |
| 12 | 74 | 5918_PROD | Accts 591-598 - Production-Demand | - | - |
| 13 | 75 | 5918_PROEF | Accts 591-598 - Production-Energy-Fuel | - | - |
| 14 | 76 | 5918_PROENF | Accts 591-598 - Production-Energy-Non-Fuel | - | - |
| 15 | 77 | 5918_STO_PRO_D | Accts 591-598 - Storage-Production-Demand | - | - |
| 16 | 78 | 5918_STO_TRA_D | Accts 591-598 - Storage-Transmission-Demand | - | - |
| 17 | 79 | 5918_STO_DIS_DSUB | Accts 591-598 - Storage-Distribution-Demand-Subs | - | - |
| 18 | 80 | 5918_STO_DIS_DPRI | Accts 591-598 - Storage-Distribution-Demand-Primary | - | - |
| 19 | 81 | 5918_STO_DIS_DSEC | Accts 591-598 - Storage-Distribution-Demand-Secondary | - | - |
| 20 | 82 | 5918_TRAD | Accts 591-598 - Transmission-Demand | - | - |
| 21 | 83 | 5918_DISDSUB | Accts 591-598 - Distribution-Demand-Subs | 0.00196 | 0.07557 |
| 22 | 84 | 5918_DISDPRI | Accts 591-598 - Distribution-Demand-Primary | 0.00208 | 0.08029 |
| 23 | 85 | 5918_DISDSEC | Accts 591-598 - Distribution-Demand-Secondary | 0.00231 | - |
| 24 | 86 | 5918_DISCSRV | Accts 591-598 - Distribution-Customer-Services | - | - |
| 25 | 87 | 5918_DISCMTR | Accts 591-598 - Distribution-Customer-Meters | 0.00035 | 0.01283 |
| 26 | 88 | 5918_DISCMTRR | Accts 591-598 - Distribution-Customer-Meter Reading | - | - |
| 27 | 89 | 5918_DISCBIL | Accts 591-598 - Distribution-Customer-Billing & Collections | - | - |
| 28 | 90 | 5918_DISCINF | Accts 591-598 - Distribution-Customer-Service & Info | - | - |
| 29 | 91 | 5918_DISCOTH | Accts 591-598 - Distribution-Customer-Other | 0.00012 | 0.01018 |
| 30 | 92 | CACT_DISCMTRR | Cust Accts - Distribution-Customer-Meter Reading | 0.00004 | 0.00028 |
| 31 | 93 | CACT_DISCBIL | Cust Accts - Distribution-Customer-Billing & Collections | 0.00004 | 0.00028 |
| 32 | 94 | CACT_DISCINF | Cust Accts - Distribution-Customer-Service & Info | - | - |
| 33 | 95 | CACT_DISCOTH | Cust Accts - Distribution-Customer-Other | 0.00023 | 0.01999 |
| 34 | 96 | LA_PROD | Labor - Production-Demand | 0.00091 | 0.09341 |
| 35 | 97 | LA_PROEF | Labor - Production-Energy-Fuel | - | - |
| 36 | 98 | LA_PROENF | Labor - Production-Energy-Non-Fuel | - | - |
| 37 | 99 | LA_STO_PRO_D | Labor - Storage-Production-Demand | - | - |
| 38 | 100 | LA_STO_TRA_D | Labor - Storage-Transmission-Demand | - | - |
| 39 | 101 | LA_STO_DIS_DSUB | Labor - Storage-Distribution-Demand-Subs | - | - |
| 40 | 102 | LA_STO_DIS_DPRI | Labor - Storage-Distribution-Demand-Primary | - | - |

This schedule is sponsored by PNM Witness Larkin

**PUBLIC SERVICE OF NEW MEXICO**
**Test Period Ending September 30th, 2028**

| Class_Factors Line No. | Factor No. | | | Schedule 5 Industrial Power | Schedule 10 Irrigation |
|---|---|---|---|---|---|
| 2 | 64 | 5819_TRAD | Accts 581-589 - Transmission-Demand | - | - |
| 3 | 65 | 5819_DISDSUB | Accts 581-589 - Distribution-Demand-Subs | - | 0.00301 |
| 4 | 66 | 5819_DISDPRI | Accts 581-589 - Distribution-Demand-Primary | - | 0.00320 |
| 5 | 67 | 5819_DISDSEC | Accts 581-589 - Distribution-Demand-Secondary | - | 0.00355 |
| 6 | 68 | 5819_DISCSRV | Accts 581-589 - Distribution-Customer-Services | - | - |
| 7 | 69 | 5819_DISCMTR | Accts 581-589 - Distribution-Customer-Meters | - | 0.00492 |
| 8 | 70 | 5819_DISCMTRR | Accts 581-589 - Distribution-Customer-Meter Reading | - | - |
| 9 | 71 | 5819_DISCBIL | Accts 581-589 - Distribution-Customer-Billing & Collections | - | - |
| 10 | 72 | 5819_DISCINF | Accts 581-589 - Distribution-Customer-Service & Info | - | - |
| 11 | 73 | 5819_DISCOTH | Accts 581-589 - Distribution-Customer-Other | - | 0.00047 |
| 12 | 74 | 5918_PROD | Accts 591-598 - Production-Demand | - | - |
| 13 | 75 | 5918_PROEF | Accts 591-598 - Production-Energy-Fuel | - | - |
| 14 | 76 | 5918_PROENF | Accts 591-598 - Production-Energy-Non-Fuel | - | - |
| 15 | 77 | 5918_STO_PRO_D | Accts 591-598 - Storage-Production-Demand | - | - |
| 16 | 78 | 5918_STO_TRA_D | Accts 591-598 - Storage-Transmission-Demand | - | - |
| 17 | 79 | 5918_STO_DIS_DSUB | Accts 591-598 - Storage-Distribution-Demand-Subs | - | - |
| 18 | 80 | 5918_STO_DIS_DPRI | Accts 591-598 - Storage-Distribution-Demand-Primary | - | - |
| 19 | 81 | 5918_STO_DIS_DSEC | Accts 591-598 - Storage-Distribution-Demand-Secondary | - | - |
| 20 | 82 | 5918_TRAD | Accts 591-598 - Transmission-Demand | - | - |
| 21 | 83 | 5918_DISDSUB | Accts 591-598 - Distribution-Demand-Subs | - | 0.00301 |
| 22 | 84 | 5918_DISDPRI | Accts 591-598 - Distribution-Demand-Primary | - | 0.00320 |
| 23 | 85 | 5918_DISDSEC | Accts 591-598 - Distribution-Demand-Secondary | - | 0.00355 |
| 24 | 86 | 5918_DISCSRV | Accts 591-598 - Distribution-Customer-Services | - | - |
| 25 | 87 | 5918_DISCMTR | Accts 591-598 - Distribution-Customer-Meters | - | 0.00492 |
| 26 | 88 | 5918_DISCMTRR | Accts 591-598 - Distribution-Customer-Meter Reading | - | - |
| 27 | 89 | 5918_DISCBIL | Accts 591-598 - Distribution-Customer-Billing & Collections | - | - |
| 28 | 90 | 5918_DISCINF | Accts 591-598 - Distribution-Customer-Service & Info | - | - |
| 29 | 91 | 5918_DISCOTH | Accts 591-598 - Distribution-Customer-Other | - | 0.00047 |
| 30 | 92 | CACT_DISCMTRR | Cust Accts - Distribution-Customer-Meter Reading | - | 0.00055 |
| 31 | 93 | CACT_DISCBIL | Cust Accts - Distribution-Customer-Billing & Collections | - | 0.00055 |
| 32 | 94 | CACT_DISCINF | Cust Accts - Distribution-Customer-Service & Info | - | - |
| 33 | 95 | CACT_DISCOTH | Cust Accts - Distribution-Customer-Other | - | 0.00093 |
| 34 | 96 | LA_PROD | Labor - Production-Demand | - | 0.00247 |
| 35 | 97 | LA_PROEF | Labor - Production-Energy-Fuel | - | - |
| 36 | 98 | LA_PROENF | Labor - Production-Energy-Non-Fuel | - | - |
| 37 | 99 | LA_STO_PRO_D | Labor - Storage-Production-Demand | - | - |
| 38 | 100 | LA_STO_TRA_D | Labor - Storage-Transmission-Demand | - | - |
| 39 | 101 | LA_STO_DIS_DSUB | Labor - Storage-Distribution-Demand-Subs | - | - |
| 40 | 102 | LA_STO_DIS_DPRI | Labor - Storage-Distribution-Demand-Primary | - | - |

This schedule is sponsored by PNM Witness Larkin

**PUBLIC SERVICE OF NEW MEXICO**
**Test Period Ending September 30th, 2028**

| Class_Factors Line No. | Factor No. | | | Schedule 11 Water & Sewage | Schedule 15 Industrial Power |
|---|---|---|---|---|---|
| 2 | 64 | 5819_TRAD | Accts 581-589 - Transmission-Demand | - | - |
| 3 | 65 | 5819_DISDSUB | Accts 581-589 - Distribution-Demand-Subs | 0.01931 | - |
| 4 | 66 | 5819_DISDPRI | Accts 581-589 - Distribution-Demand-Primary | 0.02052 | - |
| 5 | 67 | 5819_DISDSEC | Accts 581-589 - Distribution-Demand-Secondary | - | - |
| 6 | 68 | 5819_DISCSRV | Accts 581-589 - Distribution-Customer-Services | - | - |
| 7 | 69 | 5819_DISCMTR | Accts 581-589 - Distribution-Customer-Meters | 0.00927 | 0.00 |
| 8 | 70 | 5819_DISCMTRR | Accts 581-589 - Distribution-Customer-Meter Reading | - | - |
| 9 | 71 | 5819_DISCBIL | Accts 581-589 - Distribution-Customer-Billing & Collections | - | - |
| 10 | 72 | 5819_DISCINF | Accts 581-589 - Distribution-Customer-Service & Info | - | - |
| 11 | 73 | 5819_DISCOTH | Accts 581-589 - Distribution-Customer-Other | 0.00177 | 0.00 |
| 12 | 74 | 5918_PROD | Accts 591-598 - Production-Demand | - | - |
| 13 | 75 | 5918_PROEF | Accts 591-598 - Production-Energy-Fuel | - | - |
| 14 | 76 | 5918_PROENF | Accts 591-598 - Production-Energy-Non-Fuel | - | - |
| 15 | 77 | 5918_STO_PRO_D | Accts 591-598 - Storage-Production-Demand | - | - |
| 16 | 78 | 5918_STO_TRA_D | Accts 591-598 - Storage-Transmission-Demand | - | - |
| 17 | 79 | 5918_STO_DIS_DSUB | Accts 591-598 - Storage-Distribution-Demand-Subs | - | - |
| 18 | 80 | 5918_STO_DIS_DPRI | Accts 591-598 - Storage-Distribution-Demand-Primary | - | - |
| 19 | 81 | 5918_STO_DIS_DSEC | Accts 591-598 - Storage-Distribution-Demand-Secondary | - | - |
| 20 | 82 | 5918_TRAD | Accts 591-598 - Transmission-Demand | - | - |
| 21 | 83 | 5918_DISDSUB | Accts 591-598 - Distribution-Demand-Subs | 0.01931 | - |
| 22 | 84 | 5918_DISDPRI | Accts 591-598 - Distribution-Demand-Primary | 0.02052 | - |
| 23 | 85 | 5918_DISDSEC | Accts 591-598 - Distribution-Demand-Secondary | - | - |
| 24 | 86 | 5918_DISCSRV | Accts 591-598 - Distribution-Customer-Services | - | - |
| 25 | 87 | 5918_DISCMTR | Accts 591-598 - Distribution-Customer-Meters | 0.00927 | 0.00 |
| 26 | 88 | 5918_DISCMTRR | Accts 591-598 - Distribution-Customer-Meter Reading | - | - |
| 27 | 89 | 5918_DISCBIL | Accts 591-598 - Distribution-Customer-Billing & Collections | - | - |
| 28 | 90 | 5918_DISCINF | Accts 591-598 - Distribution-Customer-Service & Info | - | - |
| 29 | 91 | 5918_DISCOTH | Accts 591-598 - Distribution-Customer-Other | 0.00177 | 0.00 |
| 30 | 92 | CACT_DISCMTRR | Cust Accts - Distribution-Customer-Meter Reading | 0.00020 | 0.00 |
| 31 | 93 | CACT_DISCBIL | Cust Accts - Distribution-Customer-Billing & Collections | 0.00020 | 0.00 |
| 32 | 94 | CACT_DISCINF | Cust Accts - Distribution-Customer-Service & Info | - | - |
| 33 | 95 | CACT_DISCOTH | Cust Accts - Distribution-Customer-Other | 0.00347 | 0.00 |
| 34 | 96 | LA_PROD | Labor - Production-Demand | 0.00720 | 0.01 |
| 35 | 97 | LA_PROEF | Labor - Production-Energy-Fuel | - | - |
| 36 | 98 | LA_PROENF | Labor - Production-Energy-Non-Fuel | - | - |
| 37 | 99 | LA_STO_PRO_D | Labor - Storage-Production-Demand | - | - |
| 38 | 100 | LA_STO_TRA_D | Labor - Storage-Transmission-Demand | - | - |
| 39 | 101 | LA_STO_DIS_DSUB | Labor - Storage-Distribution-Demand-Subs | - | - |
| 40 | 102 | LA_STO_DIS_DPRI | Labor - Storage-Distribution-Demand-Primary | - | - |

This schedule is sponsored by PNM Witness Larkin

**PUBLIC SERVICE OF NEW MEXICO**
**Test Period Ending September 30th, 2028**

| Class_Factors Line No. | Factor No. | | | Schedule 30 Industrial Power | Schedule 33B Large Service |
|---|---|---|---|---|---|
| 2 | 64 | 5819_TRAD | Accts 581-589 - Transmission-Demand | - | - |
| 3 | 65 | 5819_DISDSUB | Accts 581-589 - Distribution-Demand-Subs | 0.04017 | - |
| 4 | 66 | 5819_DISDPRI | Accts 581-589 - Distribution-Demand-Primary | - | - |
| 5 | 67 | 5819_DISDSEC | Accts 581-589 - Distribution-Demand-Secondary | - | - |
| 6 | 68 | 5819_DISCSRV | Accts 581-589 - Distribution-Customer-Services | - | - |
| 7 | 69 | 5819_DISCMTR | Accts 581-589 - Distribution-Customer-Meters | 0.00008 | 0.00081 |
| 8 | 70 | 5819_DISCMTRR | Accts 581-589 - Distribution-Customer-Meter Reading | - | - |
| 9 | 71 | 5819_DISCBIL | Accts 581-589 - Distribution-Customer-Billing & Collections | - | - |
| 10 | 72 | 5819_DISCINF | Accts 581-589 - Distribution-Customer-Service & Info | - | - |
| 11 | 73 | 5819_DISCOTH | Accts 581-589 - Distribution-Customer-Other | 0.00735 | 0.00014 |
| 12 | 74 | 5918_PROD | Accts 591-598 - Production-Demand | - | - |
| 13 | 75 | 5918_PROEF | Accts 591-598 - Production-Energy-Fuel | - | - |
| 14 | 76 | 5918_PROENF | Accts 591-598 - Production-Energy-Non-Fuel | - | - |
| 15 | 77 | 5918_STO_PRO_D | Accts 591-598 - Storage-Production-Demand | - | - |
| 16 | 78 | 5918_STO_TRA_D | Accts 591-598 - Storage-Transmission-Demand | - | - |
| 17 | 79 | 5918_STO_DIS_DSUB | Accts 591-598 - Storage-Distribution-Demand-Subs | - | - |
| 18 | 80 | 5918_STO_DIS_DPRI | Accts 591-598 - Storage-Distribution-Demand-Primary | - | - |
| 19 | 81 | 5918_STO_DIS_DSEC | Accts 591-598 - Storage-Distribution-Demand-Secondary | - | - |
| 20 | 82 | 5918_TRAD | Accts 591-598 - Transmission-Demand | - | - |
| 21 | 83 | 5918_DISDSUB | Accts 591-598 - Distribution-Demand-Subs | 0.04017 | - |
| 22 | 84 | 5918_DISDPRI | Accts 591-598 - Distribution-Demand-Primary | - | - |
| 23 | 85 | 5918_DISDSEC | Accts 591-598 - Distribution-Demand-Secondary | - | - |
| 24 | 86 | 5918_DISCSRV | Accts 591-598 - Distribution-Customer-Services | - | - |
| 25 | 87 | 5918_DISCMTR | Accts 591-598 - Distribution-Customer-Meters | 0.00008 | 0.00081 |
| 26 | 88 | 5918_DISCMTRR | Accts 591-598 - Distribution-Customer-Meter Reading | - | - |
| 27 | 89 | 5918_DISCBIL | Accts 591-598 - Distribution-Customer-Billing & Collections | - | - |
| 28 | 90 | 5918_DISCINF | Accts 591-598 - Distribution-Customer-Service & Info | - | - |
| 29 | 91 | 5918_DISCOTH | Accts 591-598 - Distribution-Customer-Other | 0.00735 | 0.00014 |
| 30 | 92 | CACT_DISCMTRR | Cust Accts - Distribution-Customer-Meter Reading | 0.00000 | 0.00002 |
| 31 | 93 | CACT_DISCBIL | Cust Accts - Distribution-Customer-Billing & Collections | 0.00000 | 0.00002 |
| 32 | 94 | CACT_DISCINF | Cust Accts - Distribution-Customer-Service & Info | - | - |
| 33 | 95 | CACT_DISCOTH | Cust Accts - Distribution-Customer-Other | 0.01443 | 0.00028 |
| 34 | 96 | LA_PROD | Labor - Production-Demand | 0.05697 | 0.00071 |
| 35 | 97 | LA_PROEF | Labor - Production-Energy-Fuel | - | - |
| 36 | 98 | LA_PROENF | Labor - Production-Energy-Non-Fuel | - | - |
| 37 | 99 | LA_STO_PRO_D | Labor - Storage-Production-Demand | - | - |
| 38 | 100 | LA_STO_TRA_D | Labor - Storage-Transmission-Demand | - | - |
| 39 | 101 | LA_STO_DIS_DSUB | Labor - Storage-Distribution-Demand-Subs | - | - |
| 40 | 102 | LA_STO_DIS_DPRI | Labor - Storage-Distribution-Demand-Primary | - | - |

This schedule is sponsored by PNM Witness Larkin

**PUBLIC SERVICE OF NEW MEXICO**
**Test Period Ending September 30th, 2028**

| Line No. | Class_Factors Factor No. | | | Schedule 35B Lg Power Service | Schedule 36B Special Service Rate |
|---|---|---|---|---|---|
| 2 | 64 | 5819_TRAD | Accts 581-589 - Transmission-Demand | - | - |
| 3 | 65 | 5819_DISDSUB | Accts 581-589 - Distribution-Demand-Subs | 0.01866 | - |
| 4 | 66 | 5819_DISDPRI | Accts 581-589 - Distribution-Demand-Primary | - | - |
| 5 | 67 | 5819_DISDSEC | Accts 581-589 - Distribution-Demand-Secondary | - | - |
| 6 | 68 | 5819_DISCSRV | Accts 581-589 - Distribution-Customer-Services | - | - |
| 7 | 69 | 5819_DISCMTR | Accts 581-589 - Distribution-Customer-Meters | 0.00040 | 0.00008 |
| 8 | 70 | 5819_DISCMTRR | Accts 581-589 - Distribution-Customer-Meter Reading | - | - |
| 9 | 71 | 5819_DISCBIL | Accts 581-589 - Distribution-Customer-Billing & Collections | - | - |
| 10 | 72 | 5819_DISCINF | Accts 581-589 - Distribution-Customer-Service & Info | - | - |
| 11 | 73 | 5819_DISCOTH | Accts 581-589 - Distribution-Customer-Other | 0.00307 | 0.01490 |
| 12 | 74 | 5918_PROD | Accts 591-598 - Production-Demand | - | - |
| 13 | 75 | 5918_PROEF | Accts 591-598 - Production-Energy-Fuel | - | - |
| 14 | 76 | 5918_PROENF | Accts 591-598 - Production-Energy-Non-Fuel | - | - |
| 15 | 77 | 5918_STO_PRO_D | Accts 591-598 - Storage-Production-Demand | - | - |
| 16 | 78 | 5918_STO_TRA_D | Accts 591-598 - Storage-Transmission-Demand | - | - |
| 17 | 79 | 5918_STO_DIS_DSUB | Accts 591-598 - Storage-Distribution-Demand-Subs | - | - |
| 18 | 80 | 5918_STO_DIS_DPRI | Accts 591-598 - Storage-Distribution-Demand-Primary | - | - |
| 19 | 81 | 5918_STO_DIS_DSEC | Accts 591-598 - Storage-Distribution-Demand-Secondary | - | - |
| 20 | 82 | 5918_TRAD | Accts 591-598 - Transmission-Demand | - | - |
| 21 | 83 | 5918_DISDSUB | Accts 591-598 - Distribution-Demand-Subs | 0.01866 | - |
| 22 | 84 | 5918_DISDPRI | Accts 591-598 - Distribution-Demand-Primary | - | - |
| 23 | 85 | 5918_DISDSEC | Accts 591-598 - Distribution-Demand-Secondary | - | - |
| 24 | 86 | 5918_DISCSRV | Accts 591-598 - Distribution-Customer-Services | - | - |
| 25 | 87 | 5918_DISCMTR | Accts 591-598 - Distribution-Customer-Meters | 0.00040 | 0.00008 |
| 26 | 88 | 5918_DISCMTRR | Accts 591-598 - Distribution-Customer-Meter Reading | - | - |
| 27 | 89 | 5918_DISCBIL | Accts 591-598 - Distribution-Customer-Billing & Collections | - | - |
| 28 | 90 | 5918_DISCINF | Accts 591-598 - Distribution-Customer-Service & Info | - | - |
| 29 | 91 | 5918_DISCOTH | Accts 591-598 - Distribution-Customer-Other | 0.00307 | 0.01490 |
| 30 | 92 | CACT_DISCMTRR | Cust Accts - Distribution-Customer-Meter Reading | 0.00001 | 0.00000 |
| 31 | 93 | CACT_DISCBIL | Cust Accts - Distribution-Customer-Billing & Collections | 0.00001 | 0.00000 |
| 32 | 94 | CACT_DISCINF | Cust Accts - Distribution-Customer-Service & Info | - | - |
| 33 | 95 | CACT_DISCOTH | Cust Accts - Distribution-Customer-Other | 0.00603 | 0.02926 |
| 34 | 96 | LA_PROD | Labor - Production-Demand | 0.02397 | - |
| 35 | 97 | LA_PROEF | Labor - Production-Energy-Fuel | - | - |
| 36 | 98 | LA_PROENF | Labor - Production-Energy-Non-Fuel | - | - |
| 37 | 99 | LA_STO_PRO_D | Labor - Storage-Production-Demand | - | - |
| 38 | 100 | LA_STO_TRA_D | Labor - Storage-Transmission-Demand | - | - |
| 39 | 101 | LA_STO_DIS_DSUB | Labor - Storage-Distribution-Demand-Subs | - | - |
| 40 | 102 | LA_STO_DIS_DPRI | Labor - Storage-Distribution-Demand-Primary | - | - |

This schedule is sponsored by PNM Witness Larkin

**PUBLIC SERVICE OF NEW MEXICO**
**Test Period Ending September 30th, 2028**

| Class_Factors Line No. | Factor No. | | | Schedule 6 Priv. Area Light | Schedule 20 Streetlighting |
|---|---|---|---|---|---|
| 2 | 64 | 5819_TRAD | Accts 581-589 - Transmission-Demand | - | - |
| 3 | 65 | 5819_DISDSUB | Accts 581-589 - Distribution-Demand-Subs | 0.00177 | 0.00207 |
| 4 | 66 | 5819_DISDPRI | Accts 581-589 - Distribution-Demand-Primary | 0.00189 | 0.00220 |
| 5 | 67 | 5819_DISDSEC | Accts 581-589 - Distribution-Demand-Secondary | 0.00210 | 0.00245 |
| 6 | 68 | 5819_DISCSRV | Accts 581-589 - Distribution-Customer-Services | - | - |
| 7 | 69 | 5819_DISCMTR | Accts 581-589 - Distribution-Customer-Meters | - | - |
| 8 | 70 | 5819_DISCMTRR | Accts 581-589 - Distribution-Customer-Meter Reading | - | - |
| 9 | 71 | 5819_DISCBIL | Accts 581-589 - Distribution-Customer-Billing & Collections | - | - |
| 10 | 72 | 5819_DISCINF | Accts 581-589 - Distribution-Customer-Service & Info | - | - |
| 11 | 73 | 5819_DISCOTH | Accts 581-589 - Distribution-Customer-Other | 0.00676 | 0.48418 |
| 12 | 74 | 5918_PROD | Accts 591-598 - Production-Demand | - | - |
| 13 | 75 | 5918_PROEF | Accts 591-598 - Production-Energy-Fuel | - | - |
| 14 | 76 | 5918_PROENF | Accts 591-598 - Production-Energy-Non-Fuel | - | - |
| 15 | 77 | 5918_STO_PRO_D | Accts 591-598 - Storage-Production-Demand | - | - |
| 16 | 78 | 5918_STO_TRA_D | Accts 591-598 - Storage-Transmission-Demand | - | - |
| 17 | 79 | 5918_STO_DIS_DSUB | Accts 591-598 - Storage-Distribution-Demand-Subs | - | - |
| 18 | 80 | 5918_STO_DIS_DPRI | Accts 591-598 - Storage-Distribution-Demand-Primary | - | - |
| 19 | 81 | 5918_STO_DIS_DSEC | Accts 591-598 - Storage-Distribution-Demand-Secondary | - | - |
| 20 | 82 | 5918_TRAD | Accts 591-598 - Transmission-Demand | - | - |
| 21 | 83 | 5918_DISDSUB | Accts 591-598 - Distribution-Demand-Subs | 0.00177 | 0.00207 |
| 22 | 84 | 5918_DISDPRI | Accts 591-598 - Distribution-Demand-Primary | 0.00189 | 0.00220 |
| 23 | 85 | 5918_DISDSEC | Accts 591-598 - Distribution-Demand-Secondary | 0.00210 | 0.00245 |
| 24 | 86 | 5918_DISCSRV | Accts 591-598 - Distribution-Customer-Services | - | - |
| 25 | 87 | 5918_DISCMTR | Accts 591-598 - Distribution-Customer-Meters | - | - |
| 26 | 88 | 5918_DISCMTRR | Accts 591-598 - Distribution-Customer-Meter Reading | - | - |
| 27 | 89 | 5918_DISCBIL | Accts 591-598 - Distribution-Customer-Billing & Collections | - | - |
| 28 | 90 | 5918_DISCINF | Accts 591-598 - Distribution-Customer-Service & Info | - | - |
| 29 | 91 | 5918_DISCOTH | Accts 591-598 - Distribution-Customer-Other | 0.00676 | 0.48418 |
| 30 | 92 | CACT_DISCMTRR | Cust Accts - Distribution-Customer-Meter Reading | - | - |
| 31 | 93 | CACT_DISCBIL | Cust Accts - Distribution-Customer-Billing & Collections | - | - |
| 32 | 94 | CACT_DISCINF | Cust Accts - Distribution-Customer-Service & Info | - | - |
| 33 | 95 | CACT_DISCOTH | Cust Accts - Distribution-Customer-Other | 0.00023 | 0.00026 |
| 34 | 96 | LA_PROD | Labor - Production-Demand | 0.00036 | 0.00041 |
| 35 | 97 | LA_PROEF | Labor - Production-Energy-Fuel | - | - |
| 36 | 98 | LA_PROENF | Labor - Production-Energy-Non-Fuel | - | - |
| 37 | 99 | LA_STO_PRO_D | Labor - Storage-Production-Demand | - | - |
| 38 | 100 | LA_STO_TRA_D | Labor - Storage-Transmission-Demand | - | - |
| 39 | 101 | LA_STO_DIS_DSUB | Labor - Storage-Distribution-Demand-Subs | - | - |
| 40 | 102 | LA_STO_DIS_DPRI | Labor - Storage-Distribution-Demand-Primary | - | - |

This schedule is sponsored by PNM Witness Larkin

**PUBLIC SERVICE OF NEW MEXICO**
**Test Period Ending September 30th, 2028**

| Line No. | Factor No. | Class_Factors | | dule 20-Customer O |
|---|---|---|---|---|
| | | | | Streetlighting |
| 2 | 64 | 5819_TRAD | Accts 581-589 - Transmission-Demand | - |
| 3 | 65 | 5819_DISDSUB | Accts 581-589 - Distribution-Demand-Subs | 0.00278 |
| 4 | 66 | 5819_DISDPRI | Accts 581-589 - Distribution-Demand-Primary | 0.00295 |
| 5 | 67 | 5819_DISDSEC | Accts 581-589 - Distribution-Demand-Secondary | 0.00328 |
| 6 | 68 | 5819_DISCSRV | Accts 581-589 - Distribution-Customer-Services | - |
| 7 | 69 | 5819_DISCMTR | Accts 581-589 - Distribution-Customer-Meters | - |
| 8 | 70 | 5819_DISCMTRR | Accts 581-589 - Distribution-Customer-Meter Reading | - |
| 9 | 71 | 5819_DISCBIL | Accts 581-589 - Distribution-Customer-Billing & Collections | - |
| 10 | 72 | 5819_DISCINF | Accts 581-589 - Distribution-Customer-Service & Info | - |
| 11 | 73 | 5819_DISCOTH | Accts 581-589 - Distribution-Customer-Other | 0.00018 |
| 12 | 74 | 5918_PROD | Accts 591-598 - Production-Demand | - |
| 13 | 75 | 5918_PROEF | Accts 591-598 - Production-Energy-Fuel | - |
| 14 | 76 | 5918_PROENF | Accts 591-598 - Production-Energy-Non-Fuel | - |
| 15 | 77 | 5918_STO_PRO_D | Accts 591-598 - Storage-Production-Demand | - |
| 16 | 78 | 5918_STO_TRA_D | Accts 591-598 - Storage-Transmission-Demand | - |
| 17 | 79 | 5918_STO_DIS_DSUB | Accts 591-598 - Storage-Distribution-Demand-Subs | - |
| 18 | 80 | 5918_STO_DIS_DPRI | Accts 591-598 - Storage-Distribution-Demand-Primary | - |
| 19 | 81 | 5918_STO_DIS_DSEC | Accts 591-598 - Storage-Distribution-Demand-Secondary | - |
| 20 | 82 | 5918_TRAD | Accts 591-598 - Transmission-Demand | - |
| 21 | 83 | 5918_DISDSUB | Accts 591-598 - Distribution-Demand-Subs | 0.00278 |
| 22 | 84 | 5918_DISDPRI | Accts 591-598 - Distribution-Demand-Primary | 0.00295 |
| 23 | 85 | 5918_DISDSEC | Accts 591-598 - Distribution-Demand-Secondary | 0.00328 |
| 24 | 86 | 5918_DISCSRV | Accts 591-598 - Distribution-Customer-Services | - |
| 25 | 87 | 5918_DISCMTR | Accts 591-598 - Distribution-Customer-Meters | - |
| 26 | 88 | 5918_DISCMTRR | Accts 591-598 - Distribution-Customer-Meter Reading | - |
| 27 | 89 | 5918_DISCBIL | Accts 591-598 - Distribution-Customer-Billing & Collections | - |
| 28 | 90 | 5918_DISCINF | Accts 591-598 - Distribution-Customer-Service & Info | - |
| 29 | 91 | 5918_DISCOTH | Accts 591-598 - Distribution-Customer-Other | 0.00018 |
| 30 | 92 | CACT_DISCMTRR | Cust Accts - Distribution-Customer-Meter Reading | - |
| 31 | 93 | CACT_DISCBIL | Cust Accts - Distribution-Customer-Billing & Collections | - |
| 32 | 94 | CACT_DISCINF | Cust Accts - Distribution-Customer-Service & Info | - |
| 33 | 95 | CACT_DISCOTH | Cust Accts - Distribution-Customer-Other | 0.00035 |
| 34 | 96 | LA_PROD | Labor - Production-Demand | 0.00055 |
| 35 | 97 | LA_PROEF | Labor - Production-Energy-Fuel | - |
| 36 | 98 | LA_PROENF | Labor - Production-Energy-Non-Fuel | - |
| 37 | 99 | LA_STO_PRO_D | Labor - Storage-Production-Demand | - |
| 38 | 100 | LA_STO_TRA_D | Labor - Storage-Transmission-Demand | - |
| 39 | 101 | LA_STO_DIS_DSUB | Labor - Storage-Distribution-Demand-Subs | - |
| 40 | 102 | LA_STO_DIS_DPRI | Labor - Storage-Distribution-Demand-Primary | - |

This schedule is sponsored by PNM Witness Larkin

**PUBLIC SERVICE OF NEW MEXICO**
**Test Period Ending September 30th, 2028**

Class_Factors

| Line No. | Factor No. | | | Other Input |
|---|---|---|---|---|
| 41 | 103 | LA_STO_DIS_DSEC | Labor - Storage-Distribution-Demand-Secondary | |
| 42 | 104 | LA_TRAD | Labor - Transmission-Demand | |
| 43 | 105 | LA_DISDSUB | Labor - Distribution-Demand-Subs | |
| 44 | 106 | LA_DISDPRI | Labor - Distribution-Demand-Primary | |
| 45 | 107 | LA_DISDSEC | Labor - Distribution-Demand-Secondary | |
| 46 | 108 | LA_DISCSRV | Labor - Distribution-Customer-Services | |
| 47 | 109 | LA_DISCMTR | Labor - Distribution-Customer-Meters | |
| 48 | 110 | LA_DISCMTRR | Labor - Distribution-Customer-Meter Reading | |
| 49 | 111 | LA_DISCBIL | Labor - Distribution-Customer-Billing & Collections | |
| 50 | 112 | LA_DISCINF | Labor - Distribution-Customer-Service & Info | |
| 51 | 113 | LA_DISCOTH | Labor - Distribution-Customer-Other | |
| 52 | 168 | RBASE_PROD | RBASE - Production-Demand | |
| 53 | 169 | RBASE_PROEF | RBASE - Production-Energy-Fuel | |
| 54 | 170 | RBASE_PROENF | RBASE - Production-Energy-Non-Fuel | |
| 55 | 171 | RBASE_STO_PRO_D | RBASE - Storage-Production-Demand | |
| 56 | 172 | RBASE_STO_TRA_D | RBASE - Storage-Transmission-Demand | |
| 57 | 173 | RBASE_STO_DIS_DSUB | RBASE - Storage-Distribution-Demand-Subs | |
| 58 | 174 | RBASE_STO_DIS_DPRI | RBASE - Storage-Distribution-Demand-Primary | |
| 59 | 175 | RBASE_STO_DIS_DSEC | RBASE - Storage-Distribution-Demand-Secondary | |
| 60 | 176 | RBASE_TRAD | RBASE - Transmission-Demand | |
| 61 | 177 | RBASE_DISDSUB | RBASE - Distribution-Demand-Subs | |
| 62 | 178 | RBASE_DISDPRI | RBASE - Distribution-Demand-Primary | |
| 1 | 179 | RBASE_DISDSEC | RBASE - Distribution-Demand-Secondary | |

**PUBLIC SERVICE OF NEW MEXICO**
**Test Period Ending September 30th, 2028**

| Class_Factors Line No. | Factor No. | | | PNM Retail | Schedule 1 Residential |
|---|---|---|---|---|---|
| 41 | 103 | LA_STO_DIS_DSEC | Labor - Storage-Distribution-Demand-Secondary | - | - |
| 42 | 104 | LA_TRAD | Labor - Transmission-Demand | 1.00000 | 0.37657 |
| 43 | 105 | LA_DISDSUB | Labor - Distribution-Demand-Subs | 1.00000 | 0.50167 |
| 44 | 106 | LA_DISDPRI | Labor - Distribution-Demand-Primary | 1.00000 | 0.53302 |
| 45 | 107 | LA_DISDSEC | Labor - Distribution-Demand-Secondary | 1.00000 | 0.59278 |
| 46 | 108 | LA_DISCSRV | Labor - Distribution-Customer-Services | 1.00000 | 0.91879 |
| 47 | 109 | LA_DISCMTR | Labor - Distribution-Customer-Meters | 1.00000 | 0.69636 |
| 48 | 110 | LA_DISCMTRR | Labor - Distribution-Customer-Meter Reading | 1.00000 | 0.87976 |
| 49 | 111 | LA_DISCBIL | Labor - Distribution-Customer-Billing & Collections | 1.00000 | 0.87976 |
| 50 | 112 | LA_DISCINF | Labor - Distribution-Customer-Service & Info | - | - |
| 51 | 113 | LA_DISCOTH | Labor - Distribution-Customer-Other | 1.00000 | 0.75192 |
| 52 | 168 | RBASE_PROD | RBASE - Production-Demand | 1.00000 | 0.48544 |
| 53 | 169 | RBASE_PROEF | RBASE - Production-Energy-Fuel | - | - |
| 54 | 170 | RBASE_PROENF | RBASE - Production-Energy-Non-Fuel | 1.00000 | 0.33186 |
| 55 | 171 | RBASE_STO_PRO_D | RBASE - Storage-Production-Demand | 1.00000 | 0.48544 |
| 56 | 172 | RBASE_STO_TRA_D | RBASE - Storage-Transmission-Demand | 1.00000 | 0.37657 |
| 57 | 173 | RBASE_STO_DIS_DSUB | RBASE - Storage-Distribution-Demand-Subs | 1.00000 | 0.50167 |
| 58 | 174 | RBASE_STO_DIS_DPRI | RBASE - Storage-Distribution-Demand-Primary | 1.00000 | 0.53302 |
| 59 | 175 | RBASE_STO_DIS_DSEC | RBASE - Storage-Distribution-Demand-Secondary | - | - |
| 60 | 176 | RBASE_TRAD | RBASE - Transmission-Demand | 1.00000 | 0.37657 |
| 61 | 177 | RBASE_DISDSUB | RBASE - Distribution-Demand-Subs | 1.00000 | 0.50167 |
| 62 | 178 | RBASE_DISDPRI | RBASE - Distribution-Demand-Primary | 1.00000 | 0.53302 |
| 1 | 179 | RBASE_DISDSEC | RBASE - Distribution-Demand-Secondary | 1.00000 | 0.59278 |

**PUBLIC SERVICE OF NEW MEXICO**
**Test Period Ending September 30th, 2028**

| Class_Factors Line No. | Factor No. | | | Schedule 1B Residential | Schedule 2 Small Power |
|---|---|---|---|---|---|
| 41 | 103 | LA_STO_DIS_DSEC | Labor - Storage-Distribution-Demand-Secondary | - | - |
| 42 | 104 | LA_TRAD | Labor - Transmission-Demand | 0.00400 | 0.08161 |
| 43 | 105 | LA_DISDSUB | Labor - Distribution-Demand-Subs | 0.00555 | 0.12171 |
| 44 | 106 | LA_DISDPRI | Labor - Distribution-Demand-Primary | 0.00590 | 0.12931 |
| 45 | 107 | LA_DISDSEC | Labor - Distribution-Demand-Secondary | 0.00656 | 0.14381 |
| 46 | 108 | LA_DISCSRV | Labor - Distribution-Customer-Services | 0.01481 | 0.06577 |
| 47 | 109 | LA_DISCMTR | Labor - Distribution-Customer-Meters | 0.01123 | 0.19418 |
| 48 | 110 | LA_DISCMTRR | Labor - Distribution-Customer-Meter Reading | 0.01418 | 0.09645 |
| 49 | 111 | LA_DISCBIL | Labor - Distribution-Customer-Billing & Collections | 0.01418 | 0.09645 |
| 50 | 112 | LA_DISCINF | Labor - Distribution-Customer-Service & Info | - | - |
| 51 | 113 | LA_DISCOTH | Labor - Distribution-Customer-Other | 0.01180 | 0.09355 |
| 52 | 168 | RBASE_PROD | RBASE - Production-Demand | 0.00524 | 0.10730 |
| 53 | 169 | RBASE_PROEF | RBASE - Production-Energy-Fuel | - | - |
| 54 | 170 | RBASE_PROENF | RBASE - Production-Energy-Non-Fuel | 0.00367 | 0.09329 |
| 55 | 171 | RBASE_STO_PRO_D | RBASE - Storage-Production-Demand | 0.00524 | 0.10730 |
| 56 | 172 | RBASE_STO_TRA_D | RBASE - Storage-Transmission-Demand | 0.00400 | 0.08161 |
| 57 | 173 | RBASE_STO_DIS_DSUB | RBASE - Storage-Distribution-Demand-Subs | 0.00555 | 0.12171 |
| 58 | 174 | RBASE_STO_DIS_DPRI | RBASE - Storage-Distribution-Demand-Primary | 0.00590 | 0.12931 |
| 59 | 175 | RBASE_STO_DIS_DSEC | RBASE - Storage-Distribution-Demand-Secondary | - | - |
| 60 | 176 | RBASE_TRAD | RBASE - Transmission-Demand | 0.00400 | 0.08161 |
| 61 | 177 | RBASE_DISDSUB | RBASE - Distribution-Demand-Subs | 0.00555 | 0.12171 |
| 62 | 178 | RBASE_DISDPRI | RBASE - Distribution-Demand-Primary | 0.00590 | 0.12931 |
| 1 | 179 | RBASE_DISDSEC | RBASE - Distribution-Demand-Secondary | 0.00656 | 0.14381 |

This schedule is sponsored by PNM Witness Larkin

**PUBLIC SERVICE OF NEW MEXICO**
**Test Period Ending September 30th, 2028**

| Class_Factors Line No. | Factor No. | | | Schedule 2B Small Power | Schedule 3B General Power |
|---|---|---|---|---|---|
| 41 | 103 | LA_STO_DIS_DSEC | Labor - Storage-Distribution-Demand-Secondary | - | - |
| 42 | 104 | LA_TRAD | Labor - Transmission-Demand | 0.00087 | 0.12203 |
| 43 | 105 | LA_DISDSUB | Labor - Distribution-Demand-Subs | 0.00161 | 0.14523 |
| 44 | 106 | LA_DISDPRI | Labor - Distribution-Demand-Primary | 0.00171 | 0.15431 |
| 45 | 107 | LA_DISDSEC | Labor - Distribution-Demand-Secondary | 0.00191 | 0.17161 |
| 46 | 108 | LA_DISCSRV | Labor - Distribution-Customer-Services | 0.00062 | - |
| 47 | 109 | LA_DISCMTR | Labor - Distribution-Customer-Meters | 0.00184 | 0.04395 |
| 48 | 110 | LA_DISCMTRR | Labor - Distribution-Customer-Meter Reading | 0.00091 | 0.00493 |
| 49 | 111 | LA_DISCBIL | Labor - Distribution-Customer-Billing & Collections | 0.00091 | 0.00493 |
| 50 | 112 | LA_DISCINF | Labor - Distribution-Customer-Service & Info | - | - |
| 51 | 113 | LA_DISCOTH | Labor - Distribution-Customer-Other | 0.00097 | 0.03143 |
| 52 | 168 | RBASE_PROD | RBASE - Production-Demand | 0.00141 | 0.15830 |
| 53 | 169 | RBASE_PROEF | RBASE - Production-Energy-Fuel | - | - |
| 54 | 170 | RBASE_PROENF | RBASE - Production-Energy-Non-Fuel | 0.00130 | 0.14124 |
| 55 | 171 | RBASE_STO_PRO_D | RBASE - Storage-Production-Demand | 0.00141 | 0.15830 |
| 56 | 172 | RBASE_STO_TRA_D | RBASE - Storage-Transmission-Demand | 0.00087 | 0.12203 |
| 57 | 173 | RBASE_STO_DIS_DSUB | RBASE - Storage-Distribution-Demand-Subs | 0.00161 | 0.14523 |
| 58 | 174 | RBASE_STO_DIS_DPRI | RBASE - Storage-Distribution-Demand-Primary | 0.00171 | 0.15431 |
| 59 | 175 | RBASE_STO_DIS_DSEC | RBASE - Storage-Distribution-Demand-Secondary | - | - |
| 60 | 176 | RBASE_TRAD | RBASE - Transmission-Demand | 0.00087 | 0.12203 |
| 61 | 177 | RBASE_DISDSUB | RBASE - Distribution-Demand-Subs | 0.00161 | 0.14523 |
| 62 | 178 | RBASE_DISDPRI | RBASE - Distribution-Demand-Primary | 0.00171 | 0.15431 |
| 1 | 179 | RBASE_DISDSEC | RBASE - Distribution-Demand-Secondary | 0.00191 | 0.17161 |

This schedule is sponsored by PNM Witness Larkin

**PUBLIC SERVICE OF NEW MEXICO**
**Test Period Ending September 30th, 2028**

| Class_Factors Line No. | Factor No. | | | Schedule 3C GP Low LF | Schedule 3D General Power Gov |
|---|---|---|---|---|---|
| 41 | 103 | LA_STO_DIS_DSEC | Labor - Storage-Distribution-Demand-Secondary | - | - |
| 42 | 104 | LA_TRAD | Labor - Transmission-Demand | 0.02615 | 0.00874 |
| 43 | 105 | LA_DISDSUB | Labor - Distribution-Demand-Subs | 0.04558 | 0.01041 |
| 44 | 106 | LA_DISDPRI | Labor - Distribution-Demand-Primary | 0.04843 | 0.01106 |
| 45 | 107 | LA_DISDSEC | Labor - Distribution-Demand-Secondary | 0.05386 | 0.01230 |
| 46 | 108 | LA_DISCSRV | Labor - Distribution-Customer-Services | - | - |
| 47 | 109 | LA_DISCMTR | Labor - Distribution-Customer-Meters | 0.01987 | 0.00261 |
| 48 | 110 | LA_DISCMTRR | Labor - Distribution-Customer-Meter Reading | 0.00223 | 0.00029 |
| 49 | 111 | LA_DISCBIL | Labor - Distribution-Customer-Billing & Collections | 0.00223 | 0.00029 |
| 50 | 112 | LA_DISCINF | Labor - Distribution-Customer-Service & Info | - | - |
| 51 | 113 | LA_DISCOTH | Labor - Distribution-Customer-Other | 0.00867 | 0.00233 |
| 52 | 168 | RBASE_PROD | RBASE - Production-Demand | 0.03644 | 0.01104 |
| 53 | 169 | RBASE_PROEF | RBASE - Production-Energy-Fuel | - | - |
| 54 | 170 | RBASE_PROENF | RBASE - Production-Energy-Non-Fuel | 0.03551 | 0.01077 |
| 55 | 171 | RBASE_STO_PRO_D | RBASE - Storage-Production-Demand | 0.03644 | 0.01104 |
| 56 | 172 | RBASE_STO_TRA_D | RBASE - Storage-Transmission-Demand | 0.02615 | 0.00874 |
| 57 | 173 | RBASE_STO_DIS_DSUB | RBASE - Storage-Distribution-Demand-Subs | 0.04558 | 0.01041 |
| 58 | 174 | RBASE_STO_DIS_DPRI | RBASE - Storage-Distribution-Demand-Primary | 0.04843 | 0.01106 |
| 59 | 175 | RBASE_STO_DIS_DSEC | RBASE - Storage-Distribution-Demand-Secondary | - | - |
| 60 | 176 | RBASE_TRAD | RBASE - Transmission-Demand | 0.02615 | 0.00874 |
| 61 | 177 | RBASE_DISDSUB | RBASE - Distribution-Demand-Subs | 0.04558 | 0.01041 |
| 62 | 178 | RBASE_DISDPRI | RBASE - Distribution-Demand-Primary | 0.04843 | 0.01106 |
| 1 | 179 | RBASE_DISDSEC | RBASE - Distribution-Demand-Secondary | 0.05386 | 0.01230 |

This schedule is sponsored by PNM Witness Larkin

**PUBLIC SERVICE OF NEW MEXICO**
**Test Period Ending September 30th, 2028**

| Class_Factors Line No. | Factor No. | | | Schedule 3E GP Low LF Gov |
|---|---|---|---|---|
| 41 | 103 | LA_STO_DIS_DSEC | Labor - Storage-Distribution-Demand-Secondary | - |
| 42 | 104 | LA_TRAD | Labor - Transmission-Demand | 0.00180 |
| 43 | 105 | LA_DISDSUB | Labor - Distribution-Demand-Subs | 0.00294 |
| 44 | 106 | LA_DISDPRI | Labor - Distribution-Demand-Primary | 0.00313 |
| 45 | 107 | LA_DISDSEC | Labor - Distribution-Demand-Secondary | 0.00348 |
| 46 | 108 | LA_DISCSRV | Labor - Distribution-Customer-Services | - |
| 47 | 109 | LA_DISCMTR | Labor - Distribution-Customer-Meters | 0.00114 |
| 48 | 110 | LA_DISCMTRR | Labor - Distribution-Customer-Meter Reading | 0.00013 |
| 49 | 111 | LA_DISCBIL | Labor - Distribution-Customer-Billing & Collections | 0.00013 |
| 50 | 112 | LA_DISCINF | Labor - Distribution-Customer-Service & Info | - |
| 51 | 113 | LA_DISCOTH | Labor - Distribution-Customer-Other | 0.00054 |
| 52 | 168 | RBASE_PROD | RBASE - Production-Demand | 0.00233 |
| 53 | 169 | RBASE_PROEF | RBASE - Production-Energy-Fuel | - |
| 54 | 170 | RBASE_PROENF | RBASE - Production-Energy-Non-Fuel | 0.00227 |
| 55 | 171 | RBASE_STO_PRO_D | RBASE - Storage-Production-Demand | 0.00233 |
| 56 | 172 | RBASE_STO_TRA_D | RBASE - Storage-Transmission-Demand | 0.00180 |
| 57 | 173 | RBASE_STO_DIS_DSUB | RBASE - Storage-Distribution-Demand-Subs | 0.00294 |
| 58 | 174 | RBASE_STO_DIS_DPRI | RBASE - Storage-Distribution-Demand-Primary | 0.00313 |
| 59 | 175 | RBASE_STO_DIS_DSEC | RBASE - Storage-Distribution-Demand-Secondary | - |
| 60 | 176 | RBASE_TRAD | RBASE - Transmission-Demand | 0.00180 |
| 61 | 177 | RBASE_DISDSUB | RBASE - Distribution-Demand-Subs | 0.00294 |
| 62 | 178 | RBASE_DISDPRI | RBASE - Distribution-Demand-Primary | 0.00313 |
| 1 | 179 | RBASE_DISDSEC | RBASE - Distribution-Demand-Secondary | 0.00348 |

This schedule is sponsored by PNM Witness Larkin

**PUBLIC SERVICE OF NEW MEXICO**
**Test Period Ending September 30th, 2028**

| Class_Factors Line No. | Factor No. | | | Schedule 3F GP Charging Stations | Schedule 4 Large Power |
|---|---|---|---|---|---|
| 41 | 103 | LA_STO_DIS_DSEC | Labor - Storage-Distribution-Demand-Secondary | - | - |
| 42 | 104 | LA_TRAD | Labor - Transmission-Demand | 0.00066 | 0.07136 |
| 43 | 105 | LA_DISDSUB | Labor - Distribution-Demand-Subs | 0.00196 | 0.07557 |
| 44 | 106 | LA_DISDPRI | Labor - Distribution-Demand-Primary | 0.00208 | 0.08029 |
| 45 | 107 | LA_DISDSEC | Labor - Distribution-Demand-Secondary | 0.00231 | - |
| 46 | 108 | LA_DISCSRV | Labor - Distribution-Customer-Services | - | - |
| 47 | 109 | LA_DISCMTR | Labor - Distribution-Customer-Meters | 0.00035 | 0.01283 |
| 48 | 110 | LA_DISCMTRR | Labor - Distribution-Customer-Meter Reading | 0.00004 | 0.00028 |
| 49 | 111 | LA_DISCBIL | Labor - Distribution-Customer-Billing & Collections | 0.00004 | 0.00028 |
| 50 | 112 | LA_DISCINF | Labor - Distribution-Customer-Service & Info | - | - |
| 51 | 113 | LA_DISCOTH | Labor - Distribution-Customer-Other | 0.00022 | 0.01952 |
| 52 | 168 | RBASE_PROD | RBASE - Production-Demand | 0.00091 | 0.09341 |
| 53 | 169 | RBASE_PROEF | RBASE - Production-Energy-Fuel | - | - |
| 54 | 170 | RBASE_PROENF | RBASE - Production-Energy-Non-Fuel | 0.00099 | 0.09886 |
| 55 | 171 | RBASE_STO_PRO_D | RBASE - Storage-Production-Demand | 0.00091 | 0.09341 |
| 56 | 172 | RBASE_STO_TRA_D | RBASE - Storage-Transmission-Demand | 0.00066 | 0.07136 |
| 57 | 173 | RBASE_STO_DIS_DSUB | RBASE - Storage-Distribution-Demand-Subs | 0.00196 | 0.07557 |
| 58 | 174 | RBASE_STO_DIS_DPRI | RBASE - Storage-Distribution-Demand-Primary | 0.00208 | 0.08029 |
| 59 | 175 | RBASE_STO_DIS_DSEC | RBASE - Storage-Distribution-Demand-Secondary | - | - |
| 60 | 176 | RBASE_TRAD | RBASE - Transmission-Demand | 0.00066 | 0.07136 |
| 61 | 177 | RBASE_DISDSUB | RBASE - Distribution-Demand-Subs | 0.00196 | 0.07557 |
| 62 | 178 | RBASE_DISDPRI | RBASE - Distribution-Demand-Primary | 0.00208 | 0.08029 |
| 1 | 179 | RBASE_DISDSEC | RBASE - Distribution-Demand-Secondary | 0.00231 | - |

This schedule is sponsored by PNM Witness Larkin

**PUBLIC SERVICE OF NEW MEXICO**
**Test Period Ending September 30th, 2028**

| Class_Factors Line No. | Factor No. | | | Schedule 5 Industrial Power | Schedule 10 Irrigation |
|---|---|---|---|---|---|
| 41 | 103 | LA_STO_DIS_DSEC | Labor - Storage-Distribution-Demand-Secondary | - | - |
| 42 | 104 | LA_TRAD | Labor - Transmission-Demand | - | 0.00170 |
| 43 | 105 | LA_DISDSUB | Labor - Distribution-Demand-Subs | - | 0.00301 |
| 44 | 106 | LA_DISDPRI | Labor - Distribution-Demand-Primary | - | 0.00320 |
| 45 | 107 | LA_DISDSEC | Labor - Distribution-Demand-Secondary | - | 0.00355 |
| 46 | 108 | LA_DISCSRV | Labor - Distribution-Customer-Services | - | - |
| 47 | 109 | LA_DISCMTR | Labor - Distribution-Customer-Meters | - | 0.00492 |
| 48 | 110 | LA_DISCMTRR | Labor - Distribution-Customer-Meter Reading | - | 0.00055 |
| 49 | 111 | LA_DISCBIL | Labor - Distribution-Customer-Billing & Collections | - | 0.00055 |
| 50 | 112 | LA_DISCINF | Labor - Distribution-Customer-Service & Info | - | - |
| 51 | 113 | LA_DISCOTH | Labor - Distribution-Customer-Other | - | 0.00091 |
| 52 | 168 | RBASE_PROD | RBASE - Production-Demand | - | 0.00247 |
| 53 | 169 | RBASE_PROEF | RBASE - Production-Energy-Fuel | - | - |
| 54 | 170 | RBASE_PROENF | RBASE - Production-Energy-Non-Fuel | - | 0.00243 |
| 55 | 171 | RBASE_STO_PRO_D | RBASE - Storage-Production-Demand | - | 0.00247 |
| 56 | 172 | RBASE_STO_TRA_D | RBASE - Storage-Transmission-Demand | - | 0.00170 |
| 57 | 173 | RBASE_STO_DIS_DSUB | RBASE - Storage-Distribution-Demand-Subs | - | 0.00301 |
| 58 | 174 | RBASE_STO_DIS_DPRI | RBASE - Storage-Distribution-Demand-Primary | - | 0.00320 |
| 59 | 175 | RBASE_STO_DIS_DSEC | RBASE - Storage-Distribution-Demand-Secondary | - | - |
| 60 | 176 | RBASE_TRAD | RBASE - Transmission-Demand | - | 0.00170 |
| 61 | 177 | RBASE_DISDSUB | RBASE - Distribution-Demand-Subs | - | 0.00301 |
| 62 | 178 | RBASE_DISDPRI | RBASE - Distribution-Demand-Primary | - | 0.00320 |
| 1 | 179 | RBASE_DISDSEC | RBASE - Distribution-Demand-Secondary | - | 0.00355 |

**PUBLIC SERVICE OF NEW MEXICO**
**Test Period Ending September 30th, 2028**

| Class_Factors Line No. | Factor No. | | | Schedule 11 Water & Sewage | Schedule 15 Industrial Power |
|---|---|---|---|---|---|
| 41 | 103 | LA_STO_DIS_DSEC | Labor - Storage-Distribution-Demand-Secondary | - | - |
| 42 | 104 | LA_TRAD | Labor - Transmission-Demand | 0.00667 | 0.00 |
| 43 | 105 | LA_DISDSUB | Labor - Distribution-Demand-Subs | 0.01931 | - |
| 44 | 106 | LA_DISDPRI | Labor - Distribution-Demand-Primary | 0.02052 | - |
| 45 | 107 | LA_DISDSEC | Labor - Distribution-Demand-Secondary | - | - |
| 46 | 108 | LA_DISCSRV | Labor - Distribution-Customer-Services | - | - |
| 47 | 109 | LA_DISCMTR | Labor - Distribution-Customer-Meters | 0.00927 | 0.00 |
| 48 | 110 | LA_DISCMTRR | Labor - Distribution-Customer-Meter Reading | 0.00020 | 0.00 |
| 49 | 111 | LA_DISCBIL | Labor - Distribution-Customer-Billing & Collections | 0.00020 | 0.00 |
| 50 | 112 | LA_DISCINF | Labor - Distribution-Customer-Service & Info | - | - |
| 51 | 113 | LA_DISCOTH | Labor - Distribution-Customer-Other | 0.00339 | 0.00 |
| 52 | 168 | RBASE_PROD | RBASE - Production-Demand | 0.00720 | 0.01 |
| 53 | 169 | RBASE_PROEF | RBASE - Production-Energy-Fuel | - | - |
| 54 | 170 | RBASE_PROENF | RBASE - Production-Energy-Non-Fuel | 0.01653 | 0.01 |
| 55 | 171 | RBASE_STO_PRO_D | RBASE - Storage-Production-Demand | 0.00720 | 0.01 |
| 56 | 172 | RBASE_STO_TRA_D | RBASE - Storage-Transmission-Demand | 0.00667 | 0.00 |
| 57 | 173 | RBASE_STO_DIS_DSUB | RBASE - Storage-Distribution-Demand-Subs | 0.01931 | - |
| 58 | 174 | RBASE_STO_DIS_DPRI | RBASE - Storage-Distribution-Demand-Primary | 0.02052 | - |
| 59 | 175 | RBASE_STO_DIS_DSEC | RBASE - Storage-Distribution-Demand-Secondary | - | - |
| 60 | 176 | RBASE_TRAD | RBASE - Transmission-Demand | 0.00667 | 0.00 |
| 61 | 177 | RBASE_DISDSUB | RBASE - Distribution-Demand-Subs | 0.01931 | - |
| 62 | 178 | RBASE_DISDPRI | RBASE - Distribution-Demand-Primary | 0.02052 | - |
| 1 | 179 | RBASE_DISDSEC | RBASE - Distribution-Demand-Secondary | - | - |

**PUBLIC SERVICE OF NEW MEXICO**
**Test Period Ending September 30th, 2028**

| Class_Factors Line No. | Factor No. | | | Schedule 30 Industrial Power | Schedule 33B Large Service |
|---|---|---|---|---|---|
| 41 | 103 | LA_STO_DIS_DSEC | Labor - Storage-Distribution-Demand-Secondary | - | - |
| 42 | 104 | LA_TRAD | Labor - Transmission-Demand | 0.04397 | 0.00064 |
| 43 | 105 | LA_DISDSUB | Labor - Distribution-Demand-Subs | 0.04017 | - |
| 44 | 106 | LA_DISDPRI | Labor - Distribution-Demand-Primary | - | - |
| 45 | 107 | LA_DISDSEC | Labor - Distribution-Demand-Secondary | - | - |
| 46 | 108 | LA_DISCSRV | Labor - Distribution-Customer-Services | - | - |
| 47 | 109 | LA_DISCMTR | Labor - Distribution-Customer-Meters | 0.00008 | 0.00081 |
| 48 | 110 | LA_DISCMTRR | Labor - Distribution-Customer-Meter Reading | 0.00000 | 0.00002 |
| 49 | 111 | LA_DISCBIL | Labor - Distribution-Customer-Billing & Collections | 0.00000 | 0.00002 |
| 50 | 112 | LA_DISCINF | Labor - Distribution-Customer-Service & Info | - | - |
| 51 | 113 | LA_DISCOTH | Labor - Distribution-Customer-Other | 0.01408 | 0.00027 |
| 52 | 168 | RBASE_PROD | RBASE - Production-Demand | 0.05697 | 0.00071 |
| 53 | 169 | RBASE_PROEF | RBASE - Production-Energy-Fuel | - | - |
| 54 | 170 | RBASE_PROENF | RBASE - Production-Energy-Non-Fuel | 0.07212 | 0.00134 |
| 55 | 171 | RBASE_STO_PRO_D | RBASE - Storage-Production-Demand | 0.05697 | 0.00071 |
| 56 | 172 | RBASE_STO_TRA_D | RBASE - Storage-Transmission-Demand | 0.04397 | 0.00064 |
| 57 | 173 | RBASE_STO_DIS_DSUB | RBASE - Storage-Distribution-Demand-Subs | 0.04017 | - |
| 58 | 174 | RBASE_STO_DIS_DPRI | RBASE - Storage-Distribution-Demand-Primary | - | - |
| 59 | 175 | RBASE_STO_DIS_DSEC | RBASE - Storage-Distribution-Demand-Secondary | - | - |
| 60 | 176 | RBASE_TRAD | RBASE - Transmission-Demand | 0.04397 | 0.00064 |
| 61 | 177 | RBASE_DISDSUB | RBASE - Distribution-Demand-Subs | 0.04017 | - |
| 62 | 178 | RBASE_DISDPRI | RBASE - Distribution-Demand-Primary | - | - |
| 1 | 179 | RBASE_DISDSEC | RBASE - Distribution-Demand-Secondary | - | - |

**PUBLIC SERVICE OF NEW MEXICO**
**Test Period Ending September 30th, 2028**

| Class_Factors Line No. | Factor No. | | | Schedule 35B Lg Power Service | Schedule 36B Special Service Rate |
|---|---|---|---|---|---|
| 41 | 103 | LA_STO_DIS_DSEC | Labor - Storage-Distribution-Demand-Secondary | - | - |
| 42 | 104 | LA_TRAD | Labor - Transmission-Demand | 0.01832 | 0.22744 |
| 43 | 105 | LA_DISDSUB | Labor - Distribution-Demand-Subs | 0.01866 | - |
| 44 | 106 | LA_DISDPRI | Labor - Distribution-Demand-Primary | - | - |
| 45 | 107 | LA_DISDSEC | Labor - Distribution-Demand-Secondary | - | - |
| 46 | 108 | LA_DISCSRV | Labor - Distribution-Customer-Services | - | - |
| 47 | 109 | LA_DISCMTR | Labor - Distribution-Customer-Meters | 0.00040 | 0.00008 |
| 48 | 110 | LA_DISCMTRR | Labor - Distribution-Customer-Meter Reading | 0.00001 | 0.00000 |
| 49 | 111 | LA_DISCBIL | Labor - Distribution-Customer-Billing & Collections | 0.00001 | 0.00000 |
| 50 | 112 | LA_DISCINF | Labor - Distribution-Customer-Service & Info | - | - |
| 51 | 113 | LA_DISCOTH | Labor - Distribution-Customer-Other | 0.00589 | 0.02857 |
| 52 | 168 | RBASE_PROD | RBASE - Production-Demand | 0.02397 | - |
| 53 | 169 | RBASE_PROEF | RBASE - Production-Energy-Fuel | - | - |
| 54 | 170 | RBASE_PROENF | RBASE - Production-Energy-Non-Fuel | 0.03011 | 0.14629 |
| 55 | 171 | RBASE_STO_PRO_D | RBASE - Storage-Production-Demand | 0.02397 | - |
| 56 | 172 | RBASE_STO_TRA_D | RBASE - Storage-Transmission-Demand | 0.01832 | 0.22744 |
| 57 | 173 | RBASE_STO_DIS_DSUB | RBASE - Storage-Distribution-Demand-Subs | 0.01866 | - |
| 58 | 174 | RBASE_STO_DIS_DPRI | RBASE - Storage-Distribution-Demand-Primary | - | - |
| 59 | 175 | RBASE_STO_DIS_DSEC | RBASE - Storage-Distribution-Demand-Secondary | - | - |
| 60 | 176 | RBASE_TRAD | RBASE - Transmission-Demand | 0.01832 | 0.22744 |
| 61 | 177 | RBASE_DISDSUB | RBASE - Distribution-Demand-Subs | 0.01866 | - |
| 62 | 178 | RBASE_DISDPRI | RBASE - Distribution-Demand-Primary | - | - |
| 1 | 179 | RBASE_DISDSEC | RBASE - Distribution-Demand-Secondary | - | - |

This schedule is sponsored by PNM Witness Larkin

**PUBLIC SERVICE OF NEW MEXICO**
**Test Period Ending September 30th, 2028**

| Class_Factors Line No. | Factor No. | | | Schedule 6 Priv. Area Light | Schedule 20 Streetlighting |
|---|---|---|---|---|---|
| 41 | 103 | LA_STO_DIS_DSEC | Labor - Storage-Distribution-Demand-Secondary | - | - |
| 42 | 104 | LA_TRAD | Labor - Transmission-Demand | 0.00086 | 0.00132 |
| 43 | 105 | LA_DISDSUB | Labor - Distribution-Demand-Subs | 0.00177 | 0.00207 |
| 44 | 106 | LA_DISDPRI | Labor - Distribution-Demand-Primary | 0.00189 | 0.00220 |
| 45 | 107 | LA_DISDSEC | Labor - Distribution-Demand-Secondary | 0.00210 | 0.00245 |
| 46 | 108 | LA_DISCSRV | Labor - Distribution-Customer-Services | - | - |
| 47 | 109 | LA_DISCMTR | Labor - Distribution-Customer-Meters | - | - |
| 48 | 110 | LA_DISCMTRR | Labor - Distribution-Customer-Meter Reading | - | - |
| 49 | 111 | LA_DISCBIL | Labor - Distribution-Customer-Billing & Collections | - | - |
| 50 | 112 | LA_DISCINF | Labor - Distribution-Customer-Service & Info | - | - |
| 51 | 113 | LA_DISCOTH | Labor - Distribution-Customer-Other | 0.00460 | 0.01959 |
| 52 | 168 | RBASE_PROD | RBASE - Production-Demand | 0.00036 | 0.00041 |
| 53 | 169 | RBASE_PROEF | RBASE - Production-Energy-Fuel | - | - |
| 54 | 170 | RBASE_PROENF | RBASE - Production-Energy-Non-Fuel | 0.00113 | 0.00129 |
| 55 | 171 | RBASE_STO_PRO_D | RBASE - Storage-Production-Demand | 0.00036 | 0.00041 |
| 56 | 172 | RBASE_STO_TRA_D | RBASE - Storage-Transmission-Demand | 0.00086 | 0.00132 |
| 57 | 173 | RBASE_STO_DIS_DSUB | RBASE - Storage-Distribution-Demand-Subs | 0.00177 | 0.00207 |
| 58 | 174 | RBASE_STO_DIS_DPRI | RBASE - Storage-Distribution-Demand-Primary | 0.00189 | 0.00220 |
| 59 | 175 | RBASE_STO_DIS_DSEC | RBASE - Storage-Distribution-Demand-Secondary | - | - |
| 60 | 176 | RBASE_TRAD | RBASE - Transmission-Demand | 0.00086 | 0.00132 |
| 61 | 177 | RBASE_DISDSUB | RBASE - Distribution-Demand-Subs | 0.00177 | 0.00207 |
| 62 | 178 | RBASE_DISDPRI | RBASE - Distribution-Demand-Primary | 0.00189 | 0.00220 |
| 1 | 179 | RBASE_DISDSEC | RBASE - Distribution-Demand-Secondary | 0.00210 | 0.00245 |

This schedule is sponsored by PNM Witness Larkin

**PUBLIC SERVICE OF NEW MEXICO**
**Test Period Ending September 30th, 2028**

| Line No. | Factor No. | Class_Factors | | dule 20-Customer O<br>Streetlighting |
|---|---|---|---|---|
| 41 | 103 | LA_STO_DIS_DSEC | Labor - Storage-Distribution-Demand-Secondary | - |
| 42 | 104 | LA_TRAD | Labor - Transmission-Demand | 0.00099 |
| 43 | 105 | LA_DISDSUB | Labor - Distribution-Demand-Subs | 0.00278 |
| 44 | 106 | LA_DISDPRI | Labor - Distribution-Demand-Primary | 0.00295 |
| 45 | 107 | LA_DISDSEC | Labor - Distribution-Demand-Secondary | 0.00328 |
| 46 | 108 | LA_DISCSRV | Labor - Distribution-Customer-Services | - |
| 47 | 109 | LA_DISCMTR | Labor - Distribution-Customer-Meters | - |
| 48 | 110 | LA_DISCMTRR | Labor - Distribution-Customer-Meter Reading | - |
| 49 | 111 | LA_DISCBIL | Labor - Distribution-Customer-Billing & Collections | - |
| 50 | 112 | LA_DISCINF | Labor - Distribution-Customer-Service & Info | - |
| 51 | 113 | LA_DISCOTH | Labor - Distribution-Customer-Other | 0.00034 |
| 52 | 168 | RBASE_PROD | RBASE - Production-Demand | 0.00055 |
| 53 | 169 | RBASE_PROEF | RBASE - Production-Energy-Fuel | - |
| 54 | 170 | RBASE_PROENF | RBASE - Production-Energy-Non-Fuel | 0.00173 |
| 55 | 171 | RBASE_STO_PRO_D | RBASE - Storage-Production-Demand | 0.00055 |
| 56 | 172 | RBASE_STO_TRA_D | RBASE - Storage-Transmission-Demand | 0.00099 |
| 57 | 173 | RBASE_STO_DIS_DSUB | RBASE - Storage-Distribution-Demand-Subs | 0.00278 |
| 58 | 174 | RBASE_STO_DIS_DPRI | RBASE - Storage-Distribution-Demand-Primary | 0.00295 |
| 59 | 175 | RBASE_STO_DIS_DSEC | RBASE - Storage-Distribution-Demand-Secondary | - |
| 60 | 176 | RBASE_TRAD | RBASE - Transmission-Demand | 0.00099 |
| 61 | 177 | RBASE_DISDSUB | RBASE - Distribution-Demand-Subs | 0.00278 |
| 62 | 178 | RBASE_DISDPRI | RBASE - Distribution-Demand-Primary | 0.00295 |
| 1 | 179 | RBASE_DISDSEC | RBASE - Distribution-Demand-Secondary | 0.00328 |

**PUBLIC SERVICE OF NEW MEXICO**
**Test Period Ending September 30th, 2028**

| Class_Factors Line No. | Factor No. | | | Other Input |
|---|---|---|---|---|
| 2 | 180 | RBASE_DISCSRV | RBASE - Distribution-Customer-Services | |
| 3 | 181 | RBASE_DISCMTR | RBASE - Distribution-Customer-Meters | |
| 4 | 182 | RBASE_DISCMTRR | RBASE - Distribution-Customer-Meter Reading | |
| 5 | 183 | RBASE_DISCBIL | RBASE - Distribution-Customer-Billing & Collections | |
| 6 | 184 | RBASE_DISCINF | RBASE - Distribution-Customer-Service & Info | |
| 7 | 185 | RBASE_DISCOTH | RBASE - Distribution-Customer-Other | |
| 8 | 186 | | | |
| 9 | 187 | | | |
| 10 | 188 | TOTAL_O&M_PROD | Total O&M Expense - Production-Demand | |
| 11 | 189 | TOTAL_O&M_PROEF | Total O&M Expense - Production-Energy-Fuel | |
| 12 | 190 | TOTAL_O&M_PROENF | Total O&M Expense - Production-Energy-Non-Fuel | |
| 13 | 191 | TOTAL_O&M_STO_PRO_D | Total O&M Expense - Storage-Production-Demand | |
| 14 | 192 | TOTAL_O&M_STO_TRA_D | Total O&M Expense - Storage-Transmission-Demand | |
| 15 | 193 | TOTAL_O&M_STO_DIS_DSUB | Total O&M Expense - Storage-Distribution-Demand-Subs | |
| 16 | 194 | TOTAL_O&M_STO_DIS_DPRI | Total O&M Expense - Storage-Distribution-Demand-Primary | |
| 17 | 195 | TOTAL_O&M_STO_DIS_DSEC | Total O&M Expense - Storage-Distribution-Demand-Secondary | |
| 18 | 196 | TOTAL_O&M_TRAD | Total O&M Expense - Transmission-Demand | |
| 19 | 197 | TOTAL_O&M_DISDSUB | Total O&M Expense - Distribution-Demand-Subs | |
| 20 | 198 | TOTAL_O&M_DISDPRI | Total O&M Expense - Distribution-Demand-Primary | |
| 21 | 199 | TOTAL_O&M_DISDSEC | Total O&M Expense - Distribution-Demand-Secondary | |
| 22 | 200 | TOTAL_O&M_DISCSRV | Total O&M Expense - Distribution-Customer-Services | |
| 23 | 201 | TOTAL_O&M_DISCMTR | Total O&M Expense - Distribution-Customer-Meters | |
| 24 | 202 | TOTAL_O&M_DISCMTRR | Total O&M Expense - Distribution-Customer-Meter Reading | |
| 25 | 203 | TOTAL_O&M_DISCBIL | Total O&M Expense - Distribution-Customer-Billing & Collections | |
| 26 | 204 | TOTAL_O&M_DISCINF | Total O&M Expense - Distribution-Customer-Service & Info | |
| 27 | 205 | TOTAL_O&M_DISCOTH | Total O&M Expense - Distribution-Customer-Other | |
| 28 | | | | |
| 29 | | **ALLOCATION DETERMINANT TABLES** | | |
| 30 | | **INDEPENDENT ALLOCATORS** | | |
| 31 | 1 | RH_DEMAND | Risk Hour Demand | |
| 32 | 2 | TRANS_12CP | Transmission Demand (based on 12CP) | |
| 33 | 3 | NCP | Max Non Coincident Peak | |
| 34 | 4 | NCP_SUBS | Max Non Coincident Peak - Substation Level | |
| 35 | 5 | NCP_PRI | Max Non Coincident Peak - Primary Level | |
| 36 | 6 | NCP_SEC | Max Non Coincident Peak - Secondary Level | |
| 37 | 7 | STORAGE_3S1W | 4CP Demand at Storage Dispatch Peak Hours | |
| 38 | 8 | AVGDEMAND | Average Demand | 8,760 |
| 39 | 9 | ENERGY | Energy - kWh at Generation (used for Base Fuel Items) | |
| 40 | 10 | ENERGY3 | ANNUAL KWH SALES @ METER (excl 36B) | |

This schedule is sponsored by PNM Witness Larkin

**PUBLIC SERVICE OF NEW MEXICO**
**Test Period Ending September 30th, 2028**

| Class_Factors | | | | | Schedule 1 |
|---|---|---|---|---|---|
| Line No. | Factor No. | | | PNM Retail | Residential |
| 2 | 180 | RBASE_DISCSRV | RBASE - Distribution-Customer-Services | 1.00000 | 0.91879 |
| 3 | 181 | RBASE_DISCMTR | RBASE - Distribution-Customer-Meters | 1.00000 | 0.69636 |
| 4 | 182 | RBASE_DISCMTRR | RBASE - Distribution-Customer-Meter Reading | 1.00000 | 0.87976 |
| 5 | 183 | RBASE_DISCBIL | RBASE - Distribution-Customer-Billing & Collections | 1.00000 | 0.87976 |
| 6 | 184 | RBASE_DISCINF | RBASE - Distribution-Customer-Service & Info | - | - |
| 7 | 185 | RBASE_DISCOTH | RBASE - Distribution-Customer-Other | 1.00000 | 0.40353 |
| 8 | 186 | | | | |
| 9 | 187 | | | | |
| 10 | 188 | TOTAL_O&M_PROD | Total O&M Expense - Production-Demand | 1.000 | 0.485 |
| 11 | 189 | TOTAL_O&M_PROEF | Total O&M Expense - Production-Energy-Fuel | - | - |
| 12 | 190 | TOTAL_O&M_PROENF | Total O&M Expense - Production-Energy-Non-Fuel | 1.000 | 0.332 |
| 13 | 191 | TOTAL_O&M_STO_PRO_D | Total O&M Expense - Storage-Production-Demand | 1.000 | 0.485 |
| 14 | 192 | TOTAL_O&M_STO_TRA_D | Total O&M Expense - Storage-Transmission-Demand | 1.000 | 0.377 |
| 15 | 193 | TOTAL_O&M_STO_DIS_DSUB | Total O&M Expense - Storage-Distribution-Demand-Subs | 1.000 | 0.502 |
| 16 | 194 | TOTAL_O&M_STO_DIS_DPRI | Total O&M Expense - Storage-Distribution-Demand-Primary | 1.000 | 0.533 |
| 17 | 195 | TOTAL_O&M_STO_DIS_DSEC | Total O&M Expense - Storage-Distribution-Demand-Secondary | - | - |
| 18 | 196 | TOTAL_O&M_TRAD | Total O&M Expense - Transmission-Demand | 1.000 | 0.377 |
| 19 | 197 | TOTAL_O&M_DISDSUB | Total O&M Expense - Distribution-Demand-Subs | 1.000 | 0.502 |
| 20 | 198 | TOTAL_O&M_DISDPRI | Total O&M Expense - Distribution-Demand-Primary | 1.000 | 0.533 |
| 21 | 199 | TOTAL_O&M_DISDSEC | Total O&M Expense - Distribution-Demand-Secondary | 1.000 | 0.593 |
| 22 | 200 | TOTAL_O&M_DISCSRV | Total O&M Expense - Distribution-Customer-Services | 1.000 | 0.919 |
| 23 | 201 | TOTAL_O&M_DISCMTR | Total O&M Expense - Distribution-Customer-Meters | 1.000 | 0.696 |
| 24 | 202 | TOTAL_O&M_DISCMTRR | Total O&M Expense - Distribution-Customer-Meter Reading | 1.000 | 0.880 |
| 25 | 203 | TOTAL_O&M_DISCBIL | Total O&M Expense - Distribution-Customer-Billing & Collections | 1.000 | 0.875 |
| 26 | 204 | TOTAL_O&M_DISCINF | Total O&M Expense - Distribution-Customer-Service & Info | - | - |
| 27 | 205 | TOTAL_O&M_DISCOTH | Total O&M Expense - Distribution-Customer-Other | 1.000 | 0.730 |
| 28 | | | | | |
| 29 | | **ALLOCATION DETERMINANT TABLES** | | | |
| 30 | | **INDEPENDENT ALLOCATORS** | | | |
| 31 | 1 | RH_DEMAND | Risk Hour Demand | 21,317 | 10,348 |
| 32 | 2 | TRANS_12CP | Transmission Demand (based on 12CP) | 23,018 | 8,668 |
| 33 | 3 | NCP | Max Non Coincident Peak | 2,743 | 1,101 |
| 34 | 4 | NCP_SUBS | Max Non Coincident Peak - Substation Level | 2,196 | 1,101 |
| 35 | 5 | NCP_PRI | Max Non Coincident Peak - Primary Level | 2,066 | 1,101 |
| 36 | 6 | NCP_SEC | Max Non Coincident Peak - Secondary Level | 1,858 | 1,101 |
| 37 | 7 | STORAGE_3S1W | 4CP Demand at Storage Dispatch Peak Hours | - | - |
| 38 | 8 | AVGDEMAND | Average Demand | 1,079,704 | 429,219 |
| 39 | 9 | ENERGY | Energy - kWh at Generation (used for Base Fuel Items) | 9,458,208,157 | 3,759,960,530 |
| 40 | 10 | ENERGY3 | ANNUAL KWH SALES @ METER (excl 36B) | - | - |

This schedule is sponsored by PNM Witness Larkin

**PUBLIC SERVICE OF NEW MEXICO**
**Test Period Ending September 30th, 2028**

| Class_Factors Line No. | Factor No. | | | Schedule 1B Residential | Schedule 2 Small Power |
|---|---|---|---|---|---|
| 2 | 180 | RBASE_DISCSRV | RBASE - Distribution-Customer-Services | 0.01481 | 0.06577 |
| 3 | 181 | RBASE_DISCMTR | RBASE - Distribution-Customer-Meters | 0.01123 | 0.19418 |
| 4 | 182 | RBASE_DISCMTRR | RBASE - Distribution-Customer-Meter Reading | 0.01418 | 0.09645 |
| 5 | 183 | RBASE_DISCBIL | RBASE - Distribution-Customer-Billing & Collections | 0.01418 | 0.09645 |
| 6 | 184 | RBASE_DISCINF | RBASE - Distribution-Customer-Service & Info | - | - |
| 7 | 185 | RBASE_DISCOTH | RBASE - Distribution-Customer-Other | 0.00583 | 0.05668 |
| 8 | 186 | | | | |
| 9 | 187 | | | | |
| 10 | 188 | TOTAL_O&M_PROD | Total O&M Expense - Production-Demand | 0.005 | 0.107 |
| 11 | 189 | TOTAL_O&M_PROEF | Total O&M Expense - Production-Energy-Fuel | - | - |
| 12 | 190 | TOTAL_O&M_PROENF | Total O&M Expense - Production-Energy-Non-Fuel | 0.004 | 0.093 |
| 13 | 191 | TOTAL_O&M_STO_PRO_D | Total O&M Expense - Storage-Production-Demand | 0.005 | 0.107 |
| 14 | 192 | TOTAL_O&M_STO_TRA_D | Total O&M Expense - Storage-Transmission-Demand | 0.004 | 0.082 |
| 15 | 193 | TOTAL_O&M_STO_DIS_DSUB | Total O&M Expense - Storage-Distribution-Demand-Subs | 0.006 | 0.122 |
| 16 | 194 | TOTAL_O&M_STO_DIS_DPRI | Total O&M Expense - Storage-Distribution-Demand-Primary | 0.006 | 0.129 |
| 17 | 195 | TOTAL_O&M_STO_DIS_DSEC | Total O&M Expense - Storage-Distribution-Demand-Secondary | - | - |
| 18 | 196 | TOTAL_O&M_TRAD | Total O&M Expense - Transmission-Demand | 0.004 | 0.082 |
| 19 | 197 | TOTAL_O&M_DISDSUB | Total O&M Expense - Distribution-Demand-Subs | 0.006 | 0.122 |
| 20 | 198 | TOTAL_O&M_DISDPRI | Total O&M Expense - Distribution-Demand-Primary | 0.006 | 0.129 |
| 21 | 199 | TOTAL_O&M_DISDSEC | Total O&M Expense - Distribution-Demand-Secondary | 0.007 | 0.144 |
| 22 | 200 | TOTAL_O&M_DISCSRV | Total O&M Expense - Distribution-Customer-Services | 0.015 | 0.066 |
| 23 | 201 | TOTAL_O&M_DISCMTR | Total O&M Expense - Distribution-Customer-Meters | 0.011 | 0.194 |
| 24 | 202 | TOTAL_O&M_DISCMTRR | Total O&M Expense - Distribution-Customer-Meter Reading | 0.014 | 0.096 |
| 25 | 203 | TOTAL_O&M_DISCBIL | Total O&M Expense - Distribution-Customer-Billing & Collections | 0.015 | 0.085 |
| 26 | 204 | TOTAL_O&M_DISCINF | Total O&M Expense - Distribution-Customer-Service & Info | - | - |
| 27 | 205 | TOTAL_O&M_DISCOTH | Total O&M Expense - Distribution-Customer-Other | 0.011 | 0.091 |
| 28 | | | | | |
| 29 | | **ALLOCATION DETERMINANT TABLES** | | | |
| 30 | | **INDEPENDENT ALLOCATORS** | | | |
| 31 | 1 | RH_DEMAND | Risk Hour Demand | 112 | 2,287 |
| 32 | 2 | TRANS_12CP | Transmission Demand (based on 12CP) | 92 | 1,879 |
| 33 | 3 | NCP | Max Non Coincident Peak | 12 | 267 |
| 34 | 4 | NCP_SUBS | Max Non Coincident Peak - Substation Level | 12 | 267 |
| 35 | 5 | NCP_PRI | Max Non Coincident Peak - Primary Level | 12 | 267 |
| 36 | 6 | NCP_SEC | Max Non Coincident Peak - Secondary Level | 12 | 267 |
| 37 | 7 | STORAGE_3S1W | 4CP Demand at Storage Dispatch Peak Hours | - | - |
| 38 | 8 | AVGDEMAND | Average Demand | 4,766 | 117,933 |
| 39 | 9 | ENERGY | Energy - kWh at Generation (used for Base Fuel Items) | 41,753,307 | 1,033,095,028 |
| 40 | 10 | ENERGY3 | ANNUAL KWH SALES @ METER (excl 36B) | - | - |

This schedule is sponsored by PNM Witness Larkin

**PUBLIC SERVICE OF NEW MEXICO**
**Test Period Ending September 30th, 2028**

| Line No. | Class_Factors Factor No. | | | Schedule 2B Small Power | Schedule 3B General Power |
|---|---|---|---|---|---|
| 2 | 180 | RBASE_DISCSRV | RBASE - Distribution-Customer-Services | 0.00062 | - |
| 3 | 181 | RBASE_DISCMTR | RBASE - Distribution-Customer-Meters | 0.00184 | 0.04395 |
| 4 | 182 | RBASE_DISCMTRR | RBASE - Distribution-Customer-Meter Reading | 0.00091 | 0.00493 |
| 5 | 183 | RBASE_DISCBIL | RBASE - Distribution-Customer-Billing & Collections | 0.00091 | 0.00493 |
| 6 | 184 | RBASE_DISCINF | RBASE - Distribution-Customer-Service & Info | - | - |
| 7 | 185 | RBASE_DISCOTH | RBASE - Distribution-Customer-Other | 0.00052 | 0.01417 |
| 8 | 186 | | | | |
| 9 | 187 | | | | |
| 10 | 188 | TOTAL_O&M_PROD | Total O&M Expense - Production-Demand | 0.001 | 0.158 |
| 11 | 189 | TOTAL_O&M_PROEF | Total O&M Expense - Production-Energy-Fuel | - | - |
| 12 | 190 | TOTAL_O&M_PROENF | Total O&M Expense - Production-Energy-Non-Fuel | 0.001 | 0.141 |
| 13 | 191 | TOTAL_O&M_STO_PRO_D | Total O&M Expense - Storage-Production-Demand | 0.001 | 0.158 |
| 14 | 192 | TOTAL_O&M_STO_TRA_D | Total O&M Expense - Storage-Transmission-Demand | 0.001 | 0.122 |
| 15 | 193 | TOTAL_O&M_STO_DIS_DSUB | Total O&M Expense - Storage-Distribution-Demand-Subs | 0.002 | 0.145 |
| 16 | 194 | TOTAL_O&M_STO_DIS_DPRI | Total O&M Expense - Storage-Distribution-Demand-Primary | 0.002 | 0.154 |
| 17 | 195 | TOTAL_O&M_STO_DIS_DSEC | Total O&M Expense - Storage-Distribution-Demand-Secondary | - | - |
| 18 | 196 | TOTAL_O&M_TRAD | Total O&M Expense - Transmission-Demand | 0.001 | 0.122 |
| 19 | 197 | TOTAL_O&M_DISDSUB | Total O&M Expense - Distribution-Demand-Subs | 0.002 | 0.145 |
| 20 | 198 | TOTAL_O&M_DISDPRI | Total O&M Expense - Distribution-Demand-Primary | 0.002 | 0.154 |
| 21 | 199 | TOTAL_O&M_DISDSEC | Total O&M Expense - Distribution-Demand-Secondary | 0.002 | 0.172 |
| 22 | 200 | TOTAL_O&M_DISCSRV | Total O&M Expense - Distribution-Customer-Services | 0.001 | - |
| 23 | 201 | TOTAL_O&M_DISCMTR | Total O&M Expense - Distribution-Customer-Meters | 0.002 | 0.044 |
| 24 | 202 | TOTAL_O&M_DISCMTRR | Total O&M Expense - Distribution-Customer-Meter Reading | 0.001 | 0.005 |
| 25 | 203 | TOTAL_O&M_DISCBIL | Total O&M Expense - Distribution-Customer-Billing & Collections | 0.001 | 0.012 |
| 26 | 204 | TOTAL_O&M_DISCINF | Total O&M Expense - Distribution-Customer-Service & Info | - | - |
| 27 | 205 | TOTAL_O&M_DISCOTH | Total O&M Expense - Distribution-Customer-Other | 0.001 | 0.030 |
| 28 | | | | | |
| 29 | | **ALLOCATION DETERMINANT TABLES** | | | |
| 30 | | **INDEPENDENT ALLOCATORS** | | | |
| 31 | 1 | RH_DEMAND | Risk Hour Demand | 30 | 3,374 |
| 32 | 2 | TRANS_12CP | Transmission Demand (based on 12CP) | 20 | 2,809 |
| 33 | 3 | NCP | Max Non Coincident Peak | 4 | 319 |
| 34 | 4 | NCP_SUBS | Max Non Coincident Peak - Substation Level | 4 | 319 |
| 35 | 5 | NCP_PRI | Max Non Coincident Peak - Primary Level | 4 | 319 |
| 36 | 6 | NCP_SEC | Max Non Coincident Peak - Secondary Level | 4 | 319 |
| 37 | 7 | STORAGE_3S1W | 4CP Demand at Storage Dispatch Peak Hours | - | - |
| 38 | 8 | AVGDEMAND | Average Demand | 1,637 | 180,087 |
| 39 | 9 | ENERGY | Energy - kWh at Generation (used for Base Fuel Items) | 14,344,214 | 1,577,566,272 |
| 40 | 10 | ENERGY3 | ANNUAL KWH SALES @ METER (excl 36B) | - | - |

This schedule is sponsored by PNM Witness Larkin

**PUBLIC SERVICE OF NEW MEXICO**
**Test Period Ending September 30th, 2028**

| Line No. | Class_Factors Factor No. | | | Schedule 3C GP Low LF | Schedule 3D General Power Gov |
|---|---|---|---|---|---|
| 2 | 180 | RBASE_DISCSRV | RBASE - Distribution-Customer-Services | - | - |
| 3 | 181 | RBASE_DISCMTR | RBASE - Distribution-Customer-Meters | 0.01987 | 0.00261 |
| 4 | 182 | RBASE_DISCMTRR | RBASE - Distribution-Customer-Meter Reading | 0.00223 | 0.00029 |
| 5 | 183 | RBASE_DISCBIL | RBASE - Distribution-Customer-Billing & Collections | 0.00223 | 0.00029 |
| 6 | 184 | RBASE_DISCINF | RBASE - Distribution-Customer-Service & Info | - | - |
| 7 | 185 | RBASE_DISCOTH | RBASE - Distribution-Customer-Other | 0.00373 | 0.00108 |
| 8 | 186 | | | | |
| 9 | 187 | | | | |
| 10 | 188 | TOTAL_O&M_PROD | Total O&M Expense - Production-Demand | 0.036 | 0.011 |
| 11 | 189 | TOTAL_O&M_PROEF | Total O&M Expense - Production-Energy-Fuel | - | - |
| 12 | 190 | TOTAL_O&M_PROENF | Total O&M Expense - Production-Energy-Non-Fuel | 0.036 | 0.011 |
| 13 | 191 | TOTAL_O&M_STO_PRO_D | Total O&M Expense - Storage-Production-Demand | 0.036 | 0.011 |
| 14 | 192 | TOTAL_O&M_STO_TRA_D | Total O&M Expense - Storage-Transmission-Demand | 0.026 | 0.009 |
| 15 | 193 | TOTAL_O&M_STO_DIS_DSUB | Total O&M Expense - Storage-Distribution-Demand-Subs | 0.046 | 0.010 |
| 16 | 194 | TOTAL_O&M_STO_DIS_DPRI | Total O&M Expense - Storage-Distribution-Demand-Primary | 0.048 | 0.011 |
| 17 | 195 | TOTAL_O&M_STO_DIS_DSEC | Total O&M Expense - Storage-Distribution-Demand-Secondary | - | - |
| 18 | 196 | TOTAL_O&M_TRAD | Total O&M Expense - Transmission-Demand | 0.026 | 0.009 |
| 19 | 197 | TOTAL_O&M_DISDSUB | Total O&M Expense - Distribution-Demand-Subs | 0.046 | 0.010 |
| 20 | 198 | TOTAL_O&M_DISDPRI | Total O&M Expense - Distribution-Demand-Primary | 0.048 | 0.011 |
| 21 | 199 | TOTAL_O&M_DISDSEC | Total O&M Expense - Distribution-Demand-Secondary | 0.054 | 0.012 |
| 22 | 200 | TOTAL_O&M_DISCSRV | Total O&M Expense - Distribution-Customer-Services | - | - |
| 23 | 201 | TOTAL_O&M_DISCMTR | Total O&M Expense - Distribution-Customer-Meters | 0.020 | 0.003 |
| 24 | 202 | TOTAL_O&M_DISCMTRR | Total O&M Expense - Distribution-Customer-Meter Reading | 0.002 | 0.000 |
| 25 | 203 | TOTAL_O&M_DISCBIL | Total O&M Expense - Distribution-Customer-Billing & Collections | 0.004 | 0.001 |
| 26 | 204 | TOTAL_O&M_DISCINF | Total O&M Expense - Distribution-Customer-Service & Info | - | - |
| 27 | 205 | TOTAL_O&M_DISCOTH | Total O&M Expense - Distribution-Customer-Other | 0.008 | 0.002 |
| 28 | | | | | |
| 29 | | **ALLOCATION DETERMINANT TABLES** | | | |
| 30 | | **INDEPENDENT ALLOCATORS** | | | |
| 31 | 1 | RH_DEMAND | Risk Hour Demand | 777 | 235 |
| 32 | 2 | TRANS_12CP | Transmission Demand (based on 12CP) | 602 | 201 |
| 33 | 3 | NCP | Max Non Coincident Peak | 100 | 23 |
| 34 | 4 | NCP_SUBS | Max Non Coincident Peak - Substation Level | 100 | 23 |
| 35 | 5 | NCP_PRI | Max Non Coincident Peak - Primary Level | 100 | 23 |
| 36 | 6 | NCP_SEC | Max Non Coincident Peak - Secondary Level | 100 | 23 |
| 37 | 7 | STORAGE_3S1W | 4CP Demand at Storage Dispatch Peak Hours | - | - |
| 38 | 8 | AVGDEMAND | Average Demand | 44,426 | 13,797 |
| 39 | 9 | ENERGY | Energy - kWh at Generation (used for Base Fuel Items) | 389,170,558 | 120,865,183 |
| 40 | 10 | ENERGY3 | ANNUAL KWH SALES @ METER (excl 36B) | - | - |

This schedule is sponsored by PNM Witness Larkin

**PUBLIC SERVICE OF NEW MEXICO**
**Test Period Ending September 30th, 2028**

| Class_Factors Line No. | Factor No. | | | Schedule 3E GP Low LF Gov |
|---|---|---|---|---|
| 2 | 180 | RBASE_DISCSRV | RBASE - Distribution-Customer-Services | - |
| 3 | 181 | RBASE_DISCMTR | RBASE - Distribution-Customer-Meters | 0.00114 |
| 4 | 182 | RBASE_DISCMTRR | RBASE - Distribution-Customer-Meter Reading | 0.00013 |
| 5 | 183 | RBASE_DISCBIL | RBASE - Distribution-Customer-Billing & Collections | 0.00013 |
| 6 | 184 | RBASE_DISCINF | RBASE - Distribution-Customer-Service & Info | - |
| 7 | 185 | RBASE_DISCOTH | RBASE - Distribution-Customer-Other | 0.00023 |
| 8 | 186 | | | |
| 9 | 187 | | | |
| 10 | 188 | TOTAL_O&M_PROD | Total O&M Expense - Production-Demand | 0.002 |
| 11 | 189 | TOTAL_O&M_PROEF | Total O&M Expense - Production-Energy-Fuel | - |
| 12 | 190 | TOTAL_O&M_PROENF | Total O&M Expense - Production-Energy-Non-Fuel | 0.002 |
| 13 | 191 | TOTAL_O&M_STO_PRO_D | Total O&M Expense - Storage-Production-Demand | 0.002 |
| 14 | 192 | TOTAL_O&M_STO_TRA_D | Total O&M Expense - Storage-Transmission-Demand | 0.002 |
| 15 | 193 | TOTAL_O&M_STO_DIS_DSUB | Total O&M Expense - Storage-Distribution-Demand-Subs | 0.003 |
| 16 | 194 | TOTAL_O&M_STO_DIS_DPRI | Total O&M Expense - Storage-Distribution-Demand-Primary | 0.003 |
| 17 | 195 | TOTAL_O&M_STO_DIS_DSEC | Total O&M Expense - Storage-Distribution-Demand-Secondary | - |
| 18 | 196 | TOTAL_O&M_TRAD | Total O&M Expense - Transmission-Demand | 0.002 |
| 19 | 197 | TOTAL_O&M_DISDSUB | Total O&M Expense - Distribution-Demand-Subs | 0.003 |
| 20 | 198 | TOTAL_O&M_DISDPRI | Total O&M Expense - Distribution-Demand-Primary | 0.003 |
| 21 | 199 | TOTAL_O&M_DISDSEC | Total O&M Expense - Distribution-Demand-Secondary | 0.003 |
| 22 | 200 | TOTAL_O&M_DISCSRV | Total O&M Expense - Distribution-Customer-Services | - |
| 23 | 201 | TOTAL_O&M_DISCMTR | Total O&M Expense - Distribution-Customer-Meters | 0.001 |
| 24 | 202 | TOTAL_O&M_DISCMTRR | Total O&M Expense - Distribution-Customer-Meter Reading | 0.000 |
| 25 | 203 | TOTAL_O&M_DISCBIL | Total O&M Expense - Distribution-Customer-Billing & Collections | 0.000 |
| 26 | 204 | TOTAL_O&M_DISCINF | Total O&M Expense - Distribution-Customer-Service & Info | - |
| 27 | 205 | TOTAL_O&M_DISCOTH | Total O&M Expense - Distribution-Customer-Other | 0.001 |
| 28 | | | | |
| 29 | | **ALLOCATION DETERMINANT TABLES** | | |
| 30 | | **INDEPENDENT ALLOCATORS** | | |
| 31 | 1 | RH_DEMAND | Risk Hour Demand | 50 |
| 32 | 2 | TRANS_12CP | Transmission Demand (based on 12CP) | 41 |
| 33 | 3 | NCP | Max Non Coincident Peak | 6 |
| 34 | 4 | NCP_SUBS | Max Non Coincident Peak - Substation Level | 6 |
| 35 | 5 | NCP_PRI | Max Non Coincident Peak - Primary Level | 6 |
| 36 | 6 | NCP_SEC | Max Non Coincident Peak - Secondary Level | 6 |
| 37 | 7 | STORAGE_3S1W | 4CP Demand at Storage Dispatch Peak Hours | - |
| 38 | 8 | AVGDEMAND | Average Demand | 2,900 |
| 39 | 9 | ENERGY | Energy - kWh at Generation (used for Base Fuel Items) | 25,399,725 |
| 40 | 10 | ENERGY3 | ANNUAL KWH SALES @ METER (excl 36B) | - |

This schedule is sponsored by PNM Witness Larkin

**PUBLIC SERVICE OF NEW MEXICO**
**Test Period Ending September 30th, 2028**

| Line No. | Class_Factors Factor No. | | | Schedule 3F GP Charging Stations | Schedule 4 Large Power |
|---|---|---|---|---|---|
| 2 | 180 | RBASE_DISCSRV | RBASE - Distribution-Customer-Services | - | - |
| 3 | 181 | RBASE_DISCMTR | RBASE - Distribution-Customer-Meters | 0.00035 | 0.01283 |
| 4 | 182 | RBASE_DISCMTRR | RBASE - Distribution-Customer-Meter Reading | 0.00004 | 0.00028 |
| 5 | 183 | RBASE_DISCBIL | RBASE - Distribution-Customer-Billing & Collections | 0.00004 | 0.00028 |
| 6 | 184 | RBASE_DISCINF | RBASE - Distribution-Customer-Service & Info | - | - |
| 7 | 185 | RBASE_DISCOTH | RBASE - Distribution-Customer-Other | 0.00010 | 0.01314 |
| 8 | 186 | | | | |
| 9 | 187 | | | | |
| 10 | 188 | TOTAL_O&M_PROD | Total O&M Expense - Production-Demand | 0.001 | 0.093 |
| 11 | 189 | TOTAL_O&M_PROEF | Total O&M Expense - Production-Energy-Fuel | - | - |
| 12 | 190 | TOTAL_O&M_PROENF | Total O&M Expense - Production-Energy-Non-Fuel | 0.001 | 0.099 |
| 13 | 191 | TOTAL_O&M_STO_PRO_D | Total O&M Expense - Storage-Production-Demand | 0.001 | 0.093 |
| 14 | 192 | TOTAL_O&M_STO_TRA_D | Total O&M Expense - Storage-Transmission-Demand | 0.001 | 0.071 |
| 15 | 193 | TOTAL_O&M_STO_DIS_DSUB | Total O&M Expense - Storage-Distribution-Demand-Subs | 0.002 | 0.076 |
| 16 | 194 | TOTAL_O&M_STO_DIS_DPRI | Total O&M Expense - Storage-Distribution-Demand-Primary | 0.002 | 0.080 |
| 17 | 195 | TOTAL_O&M_STO_DIS_DSEC | Total O&M Expense - Storage-Distribution-Demand-Secondary | - | - |
| 18 | 196 | TOTAL_O&M_TRAD | Total O&M Expense - Transmission-Demand | 0.001 | 0.071 |
| 19 | 197 | TOTAL_O&M_DISDSUB | Total O&M Expense - Distribution-Demand-Subs | 0.002 | 0.076 |
| 20 | 198 | TOTAL_O&M_DISDPRI | Total O&M Expense - Distribution-Demand-Primary | 0.002 | 0.080 |
| 21 | 199 | TOTAL_O&M_DISDSEC | Total O&M Expense - Distribution-Demand-Secondary | 0.002 | - |
| 22 | 200 | TOTAL_O&M_DISCSRV | Total O&M Expense - Distribution-Customer-Services | - | - |
| 23 | 201 | TOTAL_O&M_DISCMTR | Total O&M Expense - Distribution-Customer-Meters | 0.000 | 0.013 |
| 24 | 202 | TOTAL_O&M_DISCMTRR | Total O&M Expense - Distribution-Customer-Meter Reading | 0.000 | 0.000 |
| 25 | 203 | TOTAL_O&M_DISCBIL | Total O&M Expense - Distribution-Customer-Billing & Collections | 0.000 | 0.005 |
| 26 | 204 | TOTAL_O&M_DISCINF | Total O&M Expense - Distribution-Customer-Service & Info | - | - |
| 27 | 205 | TOTAL_O&M_DISCOTH | Total O&M Expense - Distribution-Customer-Other | 0.000 | 0.019 |
| 28 | | | | | |
| 29 | | **ALLOCATION DETERMINANT TABLES** | | | |
| 30 | | **INDEPENDENT ALLOCATORS** | | | |
| 31 | 1 | RH_DEMAND | Risk Hour Demand | 19 | 1,991 |
| 32 | 2 | TRANS_12CP | Transmission Demand (based on 12CP) | 15 | 1,642 |
| 33 | 3 | NCP | Max Non Coincident Peak | 4 | 166 |
| 34 | 4 | NCP_SUBS | Max Non Coincident Peak - Substation Level | 4 | 166 |
| 35 | 5 | NCP_PRI | Max Non Coincident Peak - Primary Level | 4 | 166 |
| 36 | 6 | NCP_SEC | Max Non Coincident Peak - Secondary Level | 4 | - |
| 37 | 7 | STORAGE_3S1W | 4CP Demand at Storage Dispatch Peak Hours | - | - |
| 38 | 8 | AVGDEMAND | Average Demand | 1,184 | 121,884 |
| 39 | 9 | ENERGY | Energy - kWh at Generation (used for Base Fuel Items) | 10,373,763 | 1,067,708,057 |
| 40 | 10 | ENERGY3 | ANNUAL KWH SALES @ METER (excl 36B) | - | - |

This schedule is sponsored by PNM Witness Larkin

**PUBLIC SERVICE OF NEW MEXICO**
**Test Period Ending September 30th, 2028**

| Class_Factors Line No. | Factor No. | | | Schedule 5 Industrial Power | Schedule 10 Irrigation |
|---|---|---|---|---|---|
| 2 | 180 | RBASE_DISCSRV | RBASE - Distribution-Customer-Services | - | - |
| 3 | 181 | RBASE_DISCMTR | RBASE - Distribution-Customer-Meters | - | 0.00492 |
| 4 | 182 | RBASE_DISCMTRR | RBASE - Distribution-Customer-Meter Reading | - | 0.00055 |
| 5 | 183 | RBASE_DISCBIL | RBASE - Distribution-Customer-Billing & Collections | - | 0.00055 |
| 6 | 184 | RBASE_DISCINF | RBASE - Distribution-Customer-Service & Info | - | - |
| 7 | 185 | RBASE_DISCOTH | RBASE - Distribution-Customer-Other | - | 0.00061 |
| 8 | 186 | | | | |
| 9 | 187 | | | | |
| 10 | 188 | TOTAL_O&M_PROD | Total O&M Expense - Production-Demand | - | 0.002 |
| 11 | 189 | TOTAL_O&M_PROEF | Total O&M Expense - Production-Energy-Fuel | - | - |
| 12 | 190 | TOTAL_O&M_PROENF | Total O&M Expense - Production-Energy-Non-Fuel | - | 0.002 |
| 13 | 191 | TOTAL_O&M_STO_PRO_D | Total O&M Expense - Storage-Production-Demand | - | 0.002 |
| 14 | 192 | TOTAL_O&M_STO_TRA_D | Total O&M Expense - Storage-Transmission-Demand | - | 0.002 |
| 15 | 193 | TOTAL_O&M_STO_DIS_DSUB | Total O&M Expense - Storage-Distribution-Demand-Subs | - | 0.003 |
| 16 | 194 | TOTAL_O&M_STO_DIS_DPRI | Total O&M Expense - Storage-Distribution-Demand-Primary | - | 0.003 |
| 17 | 195 | TOTAL_O&M_STO_DIS_DSEC | Total O&M Expense - Storage-Distribution-Demand-Secondary | - | - |
| 18 | 196 | TOTAL_O&M_TRAD | Total O&M Expense - Transmission-Demand | - | 0.002 |
| 19 | 197 | TOTAL_O&M_DISDSUB | Total O&M Expense - Distribution-Demand-Subs | - | 0.003 |
| 20 | 198 | TOTAL_O&M_DISDPRI | Total O&M Expense - Distribution-Demand-Primary | - | 0.003 |
| 21 | 199 | TOTAL_O&M_DISDSEC | Total O&M Expense - Distribution-Demand-Secondary | - | 0.004 |
| 22 | 200 | TOTAL_O&M_DISCSRV | Total O&M Expense - Distribution-Customer-Services | - | - |
| 23 | 201 | TOTAL_O&M_DISCMTR | Total O&M Expense - Distribution-Customer-Meters | - | 0.005 |
| 24 | 202 | TOTAL_O&M_DISCMTRR | Total O&M Expense - Distribution-Customer-Meter Reading | - | 0.001 |
| 25 | 203 | TOTAL_O&M_DISCBIL | Total O&M Expense - Distribution-Customer-Billing & Collections | - | 0.000 |
| 26 | 204 | TOTAL_O&M_DISCINF | Total O&M Expense - Distribution-Customer-Service & Info | - | - |
| 27 | 205 | TOTAL_O&M_DISCOTH | Total O&M Expense - Distribution-Customer-Other | - | 0.001 |
| 28 | | | | | |
| 29 | | **ALLOCATION DETERMINANT TABLES** | | | |
| 30 | | **INDEPENDENT ALLOCATORS** | | | |
| 31 | 1 | RH_DEMAND | Risk Hour Demand | - | 53 |
| 32 | 2 | TRANS_12CP | Transmission Demand (based on 12CP) | - | 39 |
| 33 | 3 | NCP | Max Non Coincident Peak | - | 7 |
| 34 | 4 | NCP_SUBS | Max Non Coincident Peak - Substation Level | - | 7 |
| 35 | 5 | NCP_PRI | Max Non Coincident Peak - Primary Level | - | 7 |
| 36 | 6 | NCP_SEC | Max Non Coincident Peak - Secondary Level | - | 7 |
| 37 | 7 | STORAGE_3S1W | 4CP Demand at Storage Dispatch Peak Hours | - | - |
| 38 | 8 | AVGDEMAND | Average Demand | - | 3,090 |
| 39 | 9 | ENERGY | Energy - kWh at Generation (used for Base Fuel Items) | - | 27,067,032 |
| 40 | 10 | ENERGY3 | ANNUAL KWH SALES @ METER (excl 36B) | - | - |

This schedule is sponsored by PNM Witness Larkin

**PUBLIC SERVICE OF NEW MEXICO**
**Test Period Ending September 30th, 2028**

| Class_Factors Line No. | Factor No. | | | Schedule 11 Water & Sewage | Schedule 15 Industrial Power |
|---|---|---|---|---|---|
| 2 | 180 | RBASE_DISCSRV | RBASE - Distribution-Customer-Services | - | - |
| 3 | 181 | RBASE_DISCMTR | RBASE - Distribution-Customer-Meters | 0.00927 | 0.00 |
| 4 | 182 | RBASE_DISCMTRR | RBASE - Distribution-Customer-Meter Reading | 0.00020 | 0.00 |
| 5 | 183 | RBASE_DISCBIL | RBASE - Distribution-Customer-Billing & Collections | 0.00020 | 0.00 |
| 6 | 184 | RBASE_DISCINF | RBASE - Distribution-Customer-Service & Info | - | - |
| 7 | 185 | RBASE_DISCOTH | RBASE - Distribution-Customer-Other | 0.00228 | 0.00 |
| 8 | 186 | | | | |
| 9 | 187 | | | | |
| 10 | 188 | TOTAL_O&M_PROD | Total O&M Expense - Production-Demand | 0.007 | 0.01 |
| 11 | 189 | TOTAL_O&M_PROEF | Total O&M Expense - Production-Energy-Fuel | - | - |
| 12 | 190 | TOTAL_O&M_PROENF | Total O&M Expense - Production-Energy-Non-Fuel | 0.017 | 0.01 |
| 13 | 191 | TOTAL_O&M_STO_PRO_D | Total O&M Expense - Storage-Production-Demand | 0.007 | 0.01 |
| 14 | 192 | TOTAL_O&M_STO_TRA_D | Total O&M Expense - Storage-Transmission-Demand | 0.007 | 0.00 |
| 15 | 193 | TOTAL_O&M_STO_DIS_DSUB | Total O&M Expense - Storage-Distribution-Demand-Subs | 0.019 | - |
| 16 | 194 | TOTAL_O&M_STO_DIS_DPRI | Total O&M Expense - Storage-Distribution-Demand-Primary | 0.021 | - |
| 17 | 195 | TOTAL_O&M_STO_DIS_DSEC | Total O&M Expense - Storage-Distribution-Demand-Secondary | - | - |
| 18 | 196 | TOTAL_O&M_TRAD | Total O&M Expense - Transmission-Demand | 0.007 | 0.00 |
| 19 | 197 | TOTAL_O&M_DISDSUB | Total O&M Expense - Distribution-Demand-Subs | 0.019 | - |
| 20 | 198 | TOTAL_O&M_DISDPRI | Total O&M Expense - Distribution-Demand-Primary | 0.021 | - |
| 21 | 199 | TOTAL_O&M_DISDSEC | Total O&M Expense - Distribution-Demand-Secondary | - | - |
| 22 | 200 | TOTAL_O&M_DISCSRV | Total O&M Expense - Distribution-Customer-Services | - | - |
| 23 | 201 | TOTAL_O&M_DISCMTR | Total O&M Expense - Distribution-Customer-Meters | 0.009 | 0.00 |
| 24 | 202 | TOTAL_O&M_DISCMTRR | Total O&M Expense - Distribution-Customer-Meter Reading | 0.000 | 0.00 |
| 25 | 203 | TOTAL_O&M_DISCBIL | Total O&M Expense - Distribution-Customer-Billing & Collections | 0.000 | 0.00 |
| 26 | 204 | TOTAL_O&M_DISCINF | Total O&M Expense - Distribution-Customer-Service & Info | - | - |
| 27 | 205 | TOTAL_O&M_DISCOTH | Total O&M Expense - Distribution-Customer-Other | 0.003 | 0.00 |
| 28 | | | | | |
| 29 | | **ALLOCATION DETERMINANT TABLES** | | | |
| 30 | | **INDEPENDENT ALLOCATORS** | | | |
| 31 | 1 | RH_DEMAND | Risk Hour Demand | 154 | 117.83 |
| 32 | 2 | TRANS_12CP | Transmission Demand (based on 12CP) | 154 | 98.49 |
| 33 | 3 | NCP | Max Non Coincident Peak | 42 | 17.00 |
| 34 | 4 | NCP_SUBS | Max Non Coincident Peak - Substation Level | 42 | - |
| 35 | 5 | NCP_PRI | Max Non Coincident Peak - Primary Level | 42 | - |
| 36 | 6 | NCP_SEC | Max Non Coincident Peak - Secondary Level | - | - |
| 37 | 7 | STORAGE_3S1W | 4CP Demand at Storage Dispatch Peak Hours | - | - |
| 38 | 8 | AVGDEMAND | Average Demand | 20,362 | 8,599 |
| 39 | 9 | ENERGY | Energy - kWh at Generation (used for Base Fuel Items) | 178,374,546 | 75,328,752.91 |
| 40 | 10 | ENERGY3 | ANNUAL KWH SALES @ METER (excl 36B) | - | - |

This schedule is sponsored by PNM Witness Larkin

**PUBLIC SERVICE OF NEW MEXICO**
**Test Period Ending September 30th, 2028**

| Class_Factors Line No. | Factor No. | | | Schedule 30 Industrial Power | Schedule 33B Large Service |
|---|---|---|---|---|---|
| 2 | 180 | RBASE_DISCSRV | RBASE - Distribution-Customer-Services | - | - |
| 3 | 181 | RBASE_DISCMTR | RBASE - Distribution-Customer-Meters | 0.00008 | 0.00081 |
| 4 | 182 | RBASE_DISCMTRR | RBASE - Distribution-Customer-Meter Reading | 0.00000 | 0.00002 |
| 5 | 183 | RBASE_DISCBIL | RBASE - Distribution-Customer-Billing & Collections | 0.00000 | 0.00002 |
| 6 | 184 | RBASE_DISCINF | RBASE - Distribution-Customer-Service & Info | - | - |
| 7 | 185 | RBASE_DISCOTH | RBASE - Distribution-Customer-Other | 0.00948 | 0.00019 |
| 8 | 186 | | | | |
| 9 | 187 | | | | |
| 10 | 188 | TOTAL_O&M_PROD | Total O&M Expense - Production-Demand | 0.057 | 0.001 |
| 11 | 189 | TOTAL_O&M_PROEF | Total O&M Expense - Production-Energy-Fuel | - | - |
| 12 | 190 | TOTAL_O&M_PROENF | Total O&M Expense - Production-Energy-Non-Fuel | 0.072 | 0.001 |
| 13 | 191 | TOTAL_O&M_STO_PRO_D | Total O&M Expense - Storage-Production-Demand | 0.057 | 0.001 |
| 14 | 192 | TOTAL_O&M_STO_TRA_D | Total O&M Expense - Storage-Transmission-Demand | 0.044 | 0.001 |
| 15 | 193 | TOTAL_O&M_STO_DIS_DSUB | Total O&M Expense - Storage-Distribution-Demand-Subs | 0.040 | - |
| 16 | 194 | TOTAL_O&M_STO_DIS_DPRI | Total O&M Expense - Storage-Distribution-Demand-Primary | - | - |
| 17 | 195 | TOTAL_O&M_STO_DIS_DSEC | Total O&M Expense - Storage-Distribution-Demand-Secondary | - | - |
| 18 | 196 | TOTAL_O&M_TRAD | Total O&M Expense - Transmission-Demand | 0.044 | 0.001 |
| 19 | 197 | TOTAL_O&M_DISDSUB | Total O&M Expense - Distribution-Demand-Subs | 0.040 | - |
| 20 | 198 | TOTAL_O&M_DISDPRI | Total O&M Expense - Distribution-Demand-Primary | - | - |
| 21 | 199 | TOTAL_O&M_DISDSEC | Total O&M Expense - Distribution-Demand-Secondary | - | - |
| 22 | 200 | TOTAL_O&M_DISCSRV | Total O&M Expense - Distribution-Customer-Services | - | - |
| 23 | 201 | TOTAL_O&M_DISCMTR | Total O&M Expense - Distribution-Customer-Meters | 0.000 | 0.001 |
| 24 | 202 | TOTAL_O&M_DISCMTRR | Total O&M Expense - Distribution-Customer-Meter Reading | 0.000 | 0.000 |
| 25 | 203 | TOTAL_O&M_DISCBIL | Total O&M Expense - Distribution-Customer-Billing & Collections | 0.000 | 0.000 |
| 26 | 204 | TOTAL_O&M_DISCINF | Total O&M Expense - Distribution-Customer-Service & Info | - | - |
| 27 | 205 | TOTAL_O&M_DISCOTH | Total O&M Expense - Distribution-Customer-Other | 0.014 | 0.000 |
| 28 | | | | | |
| 29 | | **ALLOCATION DETERMINANT TABLES** | | | |
| 30 | | **INDEPENDENT ALLOCATORS** | | | |
| 31 | 1 | RH_DEMAND | Risk Hour Demand | 1,215 | 15 |
| 32 | 2 | TRANS_12CP | Transmission Demand (based on 12CP) | 1,012 | 15 |
| 33 | 3 | NCP | Max Non Coincident Peak | 88 | 5 |
| 34 | 4 | NCP_SUBS | Max Non Coincident Peak - Substation Level | 88 | - |
| 35 | 5 | NCP_PRI | Max Non Coincident Peak - Primary Level | - | - |
| 36 | 6 | NCP_SEC | Max Non Coincident Peak - Secondary Level | - | - |
| 37 | 7 | STORAGE_3S1W | 4CP Demand at Storage Dispatch Peak Hours | - | - |
| 38 | 8 | AVGDEMAND | Average Demand | 86,408 | 1,588 |
| 39 | 9 | ENERGY | Energy - kWh at Generation (used for Base Fuel Items) | 756,936,737 | 13,906,518 |
| 40 | 10 | ENERGY3 | ANNUAL KWH SALES @ METER (excl 36B) | - | - |

This schedule is sponsored by PNM Witness Larkin

**PUBLIC SERVICE OF NEW MEXICO**
**Test Period Ending September 30th, 2028**

| Line No. | Class_Factors Factor No. | | | Schedule 35B Lg Power Service | Schedule 36B Special Service Rate |
|---|---|---|---|---|---|
| 2 | 180 | RBASE_DISCSRV | RBASE - Distribution-Customer-Services | - | - |
| 3 | 181 | RBASE_DISCMTR | RBASE - Distribution-Customer-Meters | 0.00040 | 0.00008 |
| 4 | 182 | RBASE_DISCMTRR | RBASE - Distribution-Customer-Meter Reading | 0.00001 | 0.00000 |
| 5 | 183 | RBASE_DISCBIL | RBASE - Distribution-Customer-Billing & Collections | 0.00001 | 0.00000 |
| 6 | 184 | RBASE_DISCINF | RBASE - Distribution-Customer-Service & Info | - | - |
| 7 | 185 | RBASE_DISCOTH | RBASE - Distribution-Customer-Other | 0.00396 | 0.01923 |
| 8 | 186 | | | | |
| 9 | 187 | | | | |
| 10 | 188 | TOTAL_O&M_PROD | Total O&M Expense - Production-Demand | 0.024 | - |
| 11 | 189 | TOTAL_O&M_PROEF | Total O&M Expense - Production-Energy-Fuel | - | - |
| 12 | 190 | TOTAL_O&M_PROENF | Total O&M Expense - Production-Energy-Non-Fuel | 0.030 | 0.146 |
| 13 | 191 | TOTAL_O&M_STO_PRO_D | Total O&M Expense - Storage-Production-Demand | 0.024 | - |
| 14 | 192 | TOTAL_O&M_STO_TRA_D | Total O&M Expense - Storage-Transmission-Demand | 0.018 | 0.227 |
| 15 | 193 | TOTAL_O&M_STO_DIS_DSUB | Total O&M Expense - Storage-Distribution-Demand-Subs | 0.019 | - |
| 16 | 194 | TOTAL_O&M_STO_DIS_DPRI | Total O&M Expense - Storage-Distribution-Demand-Primary | - | - |
| 17 | 195 | TOTAL_O&M_STO_DIS_DSEC | Total O&M Expense - Storage-Distribution-Demand-Secondary | - | - |
| 18 | 196 | TOTAL_O&M_TRAD | Total O&M Expense - Transmission-Demand | 0.018 | 0.227 |
| 19 | 197 | TOTAL_O&M_DISDSUB | Total O&M Expense - Distribution-Demand-Subs | 0.019 | - |
| 20 | 198 | TOTAL_O&M_DISDPRI | Total O&M Expense - Distribution-Demand-Primary | - | - |
| 21 | 199 | TOTAL_O&M_DISDSEC | Total O&M Expense - Distribution-Demand-Secondary | - | - |
| 22 | 200 | TOTAL_O&M_DISCSRV | Total O&M Expense - Distribution-Customer-Services | - | - |
| 23 | 201 | TOTAL_O&M_DISCMTR | Total O&M Expense - Distribution-Customer-Meters | 0.000 | 0.000 |
| 24 | 202 | TOTAL_O&M_DISCMTRR | Total O&M Expense - Distribution-Customer-Meter Reading | 0.000 | 0.000 |
| 25 | 203 | TOTAL_O&M_DISCBIL | Total O&M Expense - Distribution-Customer-Billing & Collections | 0.000 | 0.000 |
| 26 | 204 | TOTAL_O&M_DISCINF | Total O&M Expense - Distribution-Customer-Service & Info | - | - |
| 27 | 205 | TOTAL_O&M_DISCOTH | Total O&M Expense - Distribution-Customer-Other | 0.006 | 0.028 |
| 28 | | | | | |
| 29 | | **ALLOCATION DETERMINANT TABLES** | | | |
| 30 | | **INDEPENDENT ALLOCATORS** | | | |
| 31 | 1 | RH_DEMAND | Risk Hour Demand | 511 | - |
| 32 | 2 | TRANS_12CP | Transmission Demand (based on 12CP) | 422 | 5,235 |
| 33 | 3 | NCP | Max Non Coincident Peak | 41 | 526 |
| 34 | 4 | NCP_SUBS | Max Non Coincident Peak - Substation Level | 41 | - |
| 35 | 5 | NCP_PRI | Max Non Coincident Peak - Primary Level | - | - |
| 36 | 6 | NCP_SEC | Max Non Coincident Peak - Secondary Level | - | - |
| 37 | 7 | STORAGE_3S1W | 4CP Demand at Storage Dispatch Peak Hours | - | - |
| 38 | 8 | AVGDEMAND | Average Demand | 36,074 | - |
| 39 | 9 | ENERGY | Energy - kWh at Generation (used for Base Fuel Items) | 316,008,292 | - |
| 40 | 10 | ENERGY3 | ANNUAL KWH SALES @ METER (excl 36B) | - | - |

This schedule is sponsored by PNM Witness Larkin

**PUBLIC SERVICE OF NEW MEXICO**
**Test Period Ending September 30th, 2028**

| Line No. | Factor No. | Class_Factors | | Schedule 6 Priv. Area Light | Schedule 20 Streetlighting |
|---|---|---|---|---|---|
| 2 | 180 | RBASE_DISCSRV | RBASE - Distribution-Customer-Services | - | - |
| 3 | 181 | RBASE_DISCMTR | RBASE - Distribution-Customer-Meters | - | - |
| 4 | 182 | RBASE_DISCMTRR | RBASE - Distribution-Customer-Meter Reading | - | - |
| 5 | 183 | RBASE_DISCBIL | RBASE - Distribution-Customer-Billing & Collections | - | - |
| 6 | 184 | RBASE_DISCINF | RBASE - Distribution-Customer-Service & Info | - | - |
| 7 | 185 | RBASE_DISCOTH | RBASE - Distribution-Customer-Other | 0.00718 | 0.45688 |
| 8 | 186 | | | | |
| 9 | 187 | | | | |
| 10 | 188 | TOTAL_O&M_PROD | Total O&M Expense - Production-Demand | 0.000 | 0.000 |
| 11 | 189 | TOTAL_O&M_PROEF | Total O&M Expense - Production-Energy-Fuel | - | - |
| 12 | 190 | TOTAL_O&M_PROENF | Total O&M Expense - Production-Energy-Non-Fuel | 0.001 | 0.001 |
| 13 | 191 | TOTAL_O&M_STO_PRO_D | Total O&M Expense - Storage-Production-Demand | 0.000 | 0.000 |
| 14 | 192 | TOTAL_O&M_STO_TRA_D | Total O&M Expense - Storage-Transmission-Demand | 0.001 | 0.001 |
| 15 | 193 | TOTAL_O&M_STO_DIS_DSUB | Total O&M Expense - Storage-Distribution-Demand-Subs | 0.002 | 0.002 |
| 16 | 194 | TOTAL_O&M_STO_DIS_DPRI | Total O&M Expense - Storage-Distribution-Demand-Primary | 0.002 | 0.002 |
| 17 | 195 | TOTAL_O&M_STO_DIS_DSEC | Total O&M Expense - Storage-Distribution-Demand-Secondary | - | - |
| 18 | 196 | TOTAL_O&M_TRAD | Total O&M Expense - Transmission-Demand | 0.001 | 0.001 |
| 19 | 197 | TOTAL_O&M_DISDSUB | Total O&M Expense - Distribution-Demand-Subs | 0.002 | 0.002 |
| 20 | 198 | TOTAL_O&M_DISDPRI | Total O&M Expense - Distribution-Demand-Primary | 0.002 | 0.002 |
| 21 | 199 | TOTAL_O&M_DISDSEC | Total O&M Expense - Distribution-Demand-Secondary | 0.002 | 0.002 |
| 22 | 200 | TOTAL_O&M_DISCSRV | Total O&M Expense - Distribution-Customer-Services | - | - |
| 23 | 201 | TOTAL_O&M_DISCMTR | Total O&M Expense - Distribution-Customer-Meters | - | - |
| 24 | 202 | TOTAL_O&M_DISCMTRR | Total O&M Expense - Distribution-Customer-Meter Reading | - | - |
| 25 | 203 | TOTAL_O&M_DISCBIL | Total O&M Expense - Distribution-Customer-Billing & Collections | - | - |
| 26 | 204 | TOTAL_O&M_DISCINF | Total O&M Expense - Distribution-Customer-Service & Info | - | - |
| 27 | 205 | TOTAL_O&M_DISCOTH | Total O&M Expense - Distribution-Customer-Other | 0.011 | 0.042 |
| 28 | | | | | |
| 29 | | **ALLOCATION DETERMINANT TABLES** | | | |
| 30 | | **INDEPENDENT ALLOCATORS** | | | |
| 31 | 1 | RH_DEMAND | Risk Hour Demand | 8 | 9 |
| 32 | 2 | TRANS_12CP | Transmission Demand (based on 12CP) | 20 | 30 |
| 33 | 3 | NCP | Max Non Coincident Peak | 4 | 5 |
| 34 | 4 | NCP_SUBS | Max Non Coincident Peak - Substation Level | 4 | 5 |
| 35 | 5 | NCP_PRI | Max Non Coincident Peak - Primary Level | 4 | 5 |
| 36 | 6 | NCP_SEC | Max Non Coincident Peak - Secondary Level | 4 | 5 |
| 37 | 7 | STORAGE_3S1W | 4CP Demand at Storage Dispatch Peak Hours | - | - |
| 38 | 8 | AVGDEMAND | Average Demand | 1,563 | 1,788 |
| 39 | 9 | ENERGY | Energy - kWh at Generation (used for Base Fuel Items) | 13,689,902 | 15,666,382 |
| 40 | 10 | ENERGY3 | ANNUAL KWH SALES @ METER (excl 36B) | - | - |

This schedule is sponsored by PNM Witness Larkin

**PUBLIC SERVICE OF NEW MEXICO**
**Test Period Ending September 30th, 2028**

| Line No. | Factor No. | Class_Factors | | dule 20-Customer O<br>Streetlighting |
|---|---|---|---|---|
| 2 | 180 | RBASE_DISCSRV | RBASE - Distribution-Customer-Services | - |
| 3 | 181 | RBASE_DISCMTR | RBASE - Distribution-Customer-Meters | - |
| 4 | 182 | RBASE_DISCMTRR | RBASE - Distribution-Customer-Meter Reading | - |
| 5 | 183 | RBASE_DISCBIL | RBASE - Distribution-Customer-Billing & Collections | - |
| 6 | 184 | RBASE_DISCINF | RBASE - Distribution-Customer-Service & Info | - |
| 7 | 185 | RBASE_DISCOTH | RBASE - Distribution-Customer-Other | 0.00023 |
| 8 | 186 | | | |
| 9 | 187 | | | |
| 10 | 188 | TOTAL_O&M_PROD | Total O&M Expense - Production-Demand | 0.001 |
| 11 | 189 | TOTAL_O&M_PROEF | Total O&M Expense - Production-Energy-Fuel | - |
| 12 | 190 | TOTAL_O&M_PROENF | Total O&M Expense - Production-Energy-Non-Fuel | 0.002 |
| 13 | 191 | TOTAL_O&M_STO_PRO_D | Total O&M Expense - Storage-Production-Demand | 0.001 |
| 14 | 192 | TOTAL_O&M_STO_TRA_D | Total O&M Expense - Storage-Transmission-Demand | 0.001 |
| 15 | 193 | TOTAL_O&M_STO_DIS_DSUB | Total O&M Expense - Storage-Distribution-Demand-Subs | 0.003 |
| 16 | 194 | TOTAL_O&M_STO_DIS_DPRI | Total O&M Expense - Storage-Distribution-Demand-Primary | 0.003 |
| 17 | 195 | TOTAL_O&M_STO_DIS_DSEC | Total O&M Expense - Storage-Distribution-Demand-Secondary | - |
| 18 | 196 | TOTAL_O&M_TRAD | Total O&M Expense - Transmission-Demand | 0.001 |
| 19 | 197 | TOTAL_O&M_DISDSUB | Total O&M Expense - Distribution-Demand-Subs | 0.003 |
| 20 | 198 | TOTAL_O&M_DISDPRI | Total O&M Expense - Distribution-Demand-Primary | 0.003 |
| 21 | 199 | TOTAL_O&M_DISDSEC | Total O&M Expense - Distribution-Demand-Secondary | 0.003 |
| 22 | 200 | TOTAL_O&M_DISCSRV | Total O&M Expense - Distribution-Customer-Services | - |
| 23 | 201 | TOTAL_O&M_DISCMTR | Total O&M Expense - Distribution-Customer-Meters | - |
| 24 | 202 | TOTAL_O&M_DISCMTRR | Total O&M Expense - Distribution-Customer-Meter Reading | - |
| 25 | 203 | TOTAL_O&M_DISCBIL | Total O&M Expense - Distribution-Customer-Billing & Collections | - |
| 26 | 204 | TOTAL_O&M_DISCINF | Total O&M Expense - Distribution-Customer-Service & Info | - |
| 27 | 205 | TOTAL_O&M_DISCOTH | Total O&M Expense - Distribution-Customer-Other | 0.000 |
| 28 | | | | |
| 29 | | **ALLOCATION DETERMINANT TABLES** | | |
| 30 | | **INDEPENDENT ALLOCATORS** | | |
| 31 | 1 | RH_DEMAND | Risk Hour Demand | 12 |
| 32 | 2 | TRANS_12CP | Transmission Demand (based on 12CP) | 23 |
| 33 | 3 | NCP | Max Non Coincident Peak | 6 |
| 34 | 4 | NCP_SUBS | Max Non Coincident Peak - Substation Level | 6 |
| 35 | 5 | NCP_PRI | Max Non Coincident Peak - Primary Level | 6 |
| 36 | 6 | NCP_SEC | Max Non Coincident Peak - Secondary Level | 6 |
| 37 | 7 | STORAGE_3S1W | 4CP Demand at Storage Dispatch Peak Hours | - |
| 38 | 8 | AVGDEMAND | Average Demand | 2,397 |
| 39 | 9 | ENERGY | Energy - kWh at Generation (used for Base Fuel Items) | 20,993,357 |
| 40 | 10 | ENERGY3 | ANNUAL KWH SALES @ METER (excl 36B) | - |

This schedule is sponsored by PNM Witness Larkin

**PUBLIC SERVICE OF NEW MEXICO**
**Test Period Ending September 30th, 2028**

| Class_Factors Line No. | Factor No. | | | Other Input | |
|---|---|---|---|---|---|
| 41 | 11 | ENERGY4 | Energy - kWh at Meter (Non-renewable only) | | |
| 42 | 12 | FUELREV | Current Fuel Revenues | Fuel Revenue | |
| 43 | 13 | REV | Current Non Fuel Revenues | Non Fuel Revenue | |
| 44 | 14 | CUST371 | Installation on Customer Premises - Direct Assignment | | |
| 45 | 15 | CUST373 | Street Lighting and Signal Systems - Direct Assignment | | |
| 46 | 16 | CUST_DEP | Customer Deposits | | |
| 47 | 17 | NFREV | Non-Fuel Revenues | | |
| 48 | 18 | ST_LIGHTS | Streetlight Energy - kWh at generation | | |
| 49 | 19 | CUST902 | 902-Meter Reading Expenses | | |
| 50 | 20 | CUST903 | 903-Customer Records and Collection Expenses | | |
| 51 | 21 | _EXP904 | Uncollectible Percentages | | |
| 52 | | SERVICES | Number of Services | | |
| 53 | | SVCCOST | Marginal Capital Cost for Secondary Service | | |
| 54 | 22 | WTD_SERV | Customer Weighted Service Costs | | |
| 55 | | | Number of Meters | | |
| 56 | | MTRCOST | Marginal Capital Cost for Meters | | |
| 57 | 23 | WTD_METE | Customer Weighted Meter Costs | | |
| 58 | 24 | CUSTS | Annual Number of Customers | | |
| 59 | | | Annual Customers | | 80.00% |
| 60 | | | Annual kWh @ Meter | | 20.00% |
| 61 | 25 | CUSTEXP | Weighted Customer/Energy Allocator | | |
| 62 | 26 | 36B_Dedicated | Dedicated 36B Allocator | | |
| 63 | 27 | | | | |
| 64 | | | | | |
| 65 | | | | | |
| 66 | | **DEPENDENT ALLOCATORS** | | | |
| 67 | 19 | NP_PRO_DTOT | Net Plant with GI - Production-Demand | | |
| 68 | 20 | NP_PRO_EFTOT | Net Plant with GI - Production-Energy-Fuel | | |
| 69 | 21 | NP_PRO_ENFTOT | Net Plant with GI - Production-Energy-Non-Fuel | | |
| 70 | 22 | NP_STO_PRO_DTOT | Net Plant with GI - Storage-Production-Demand | | |
| 71 | 23 | NP_STO_TRA_DTOT | Net Plant with GI - Storage-Transmission-Demand | | |
| 72 | 24 | NP_STO_DIS_DSUBTOT | Net Plant with GI - Storage-Distribution-Demand-Subs | | |
| 73 | 25 | NP_STO_DIS_DPRITOT | Net Plant with GI - Storage-Distribution-Demand-Primary | | |
| 74 | 26 | NP_STO_DIS_DSECTOT | Net Plant with GI - Storage-Distribution-Demand-Secondary | | |
| 75 | 27 | NP_TRA_DTOT | Net Plant with GI - Transmission-Demand | | |
| 76 | 28 | NP_DIS_DSUBTOT | Net Plant with GI - Distribution-Demand-Subs | | |
| 77 | 29 | NP_DIS_DPRITOT | Net Plant with GI - Distribution-Demand-Primary | | |
| 78 | 30 | NP_DIS_DSECTOT | Net Plant with GI - Distribution-Demand-Secondary | | |
| 1 | 31 | NP_DIS_CSRVTOT | Net Plant with GI - Distribution-Customer-Services | | |

This schedule is sponsored by PNM Witness Larkin

**PUBLIC SERVICE OF NEW MEXICO**
**Test Period Ending September 30th, 2028**

| Class_Factors Line No. | Factor No. | | | PNM Retail | Schedule 1 Residential |
|---|---|---|---|---|---|
| 41 | 11 | ENERGY4 | Energy - kWh at Meter (Non-renewable only) | 8,255,400,633 | 2,739,613,822 |
| 42 | 12 | FUELREV | Current Fuel Revenues | 134,138,322 | 45,426,288 |
| 43 | 13 | REV | Current Non Fuel Revenues | 942,109,637 | 453,314,829 |
| 44 | 14 | CUST371 | Installation on Customer Premises - Direct Assignment | 1 | - |
| 45 | 15 | CUST373 | Street Lighting and Signal Systems - Direct Assignment | 1 | - |
| 46 | 16 | CUST_DEP | Customer Deposits | (515,727) | (438,501) |
| 47 | 17 | NFREV | Non-Fuel Revenues | 942,109,637 | 453,314,829 |
| 48 | 18 | ST_LIGHTS | Streetlight Energy - kWh at generation | 50,349,641 | - |
| 49 | 19 | CUST902 | 902-Meter Reading Expenses | 571,078 | 502,412 |
| 50 | 20 | CUST903 | 903-Customer Records and Collection Expenses | 571,078 | 502,412 |
| 51 | 21 | _EXP904 | Uncollectible Percentages | 1.00000 | 85.83% |
| 52 | | SERVICES | Number of Services | 150,177 | 118,215 |
| 53 | | SVCCOST | Marginal Capital Cost for Secondary Service | 2,046 | 2,388 |
| 54 | 22 | WTD_SERV | Customer Weighted Service Costs | 307,307,174 | 282,351,004 |
| 55 | | | Number of Meters | 571,078 | 502,412 |
| 56 | | MTRCOST | Marginal Capital Cost for Meters | 248 | 196 |
| 57 | 23 | WTD_METE | Customer Weighted Meter Costs | 141,591,170 | 98,598,422 |
| 58 | 24 | CUSTS | Annual Number of Customers | 571,078 | 502,412 |
| 59 | | | Annual Customers | 0.80000 | 0.70381 |
| 60 | | | Annual kWh @ Meter | 0.20000 | 0.06637 |
| 61 | 25 | CUSTEXP | Weighted Customer/Energy Allocator | 1.00000 | 0.77018 |
| 62 | 26 | 36B_Dedicated | Dedicated 36B Allocator | 1.00000 | - |
| 63 | 27 | | | | |
| 64 | | | | | |
| 65 | | | | | |
| 66 | | **DEPENDENT ALLOCATORS** | | | |
| 67 | 19 | NP_PRO_DTOT | Net Plant with GI - Production-Demand | 1,240,578,811 | 602,220,737 |
| 68 | 20 | NP_PRO_EFTOT | Net Plant with GI - Production-Energy-Fuel | - | - |
| 69 | 21 | NP_PRO_ENFTOT | Net Plant with GI - Production-Energy-Non-Fuel | - | - |
| 70 | 22 | NP_STO_PRO_DTOT | Net Plant with GI - Storage-Production-Demand | 194,363,523 | 94,350,913 |
| 71 | 23 | NP_STO_TRA_DTOT | Net Plant with GI - Storage-Transmission-Demand | 64,401,840 | 24,251,747 |
| 72 | 24 | NP_STO_DIS_DSUBTOT | Net Plant with GI - Storage-Distribution-Demand-Subs | 15,218,941 | 7,634,875 |
| 73 | 25 | NP_STO_DIS_DPRITOT | Net Plant with GI - Storage-Distribution-Demand-Primary | 35,391,315 | 18,864,444 |
| 74 | 26 | NP_STO_DIS_DSECTOT | Net Plant with GI - Storage-Distribution-Demand-Secondary | - | - |
| 75 | 27 | NP_TRA_DTOT | Net Plant with GI - Transmission-Demand | 703,357,079 | 264,862,583 |
| 76 | 28 | NP_DIS_DSUBTOT | Net Plant with GI - Distribution-Demand-Subs | 452,461,187 | 226,985,878 |
| 77 | 29 | NP_DIS_DPRITOT | Net Plant with GI - Distribution-Demand-Primary | 1,054,549,375 | 562,100,820 |
| 78 | 30 | NP_DIS_DSECTOT | Net Plant with GI - Distribution-Demand-Secondary | 436,193,825 | 258,567,436 |
| 1 | 31 | NP_DIS_CSRVTOT | Net Plant with GI - Distribution-Customer-Services | 173,899,604 | 159,777,357 |

This schedule is sponsored by PNM Witness Larkin

**PUBLIC SERVICE OF NEW MEXICO**
**Test Period Ending September 30th, 2028**

| Class_Factors Line No. | Factor No. | | | Schedule 1B Residential | Schedule 2 Small Power |
|---|---|---|---|---|---|
| 41 | 11 | ENERGY4 | Energy - kWh at Meter (Non-renewable only) | 30,336,999 | 770,108,502 |
| 42 | 12 | FUELREV | Current Fuel Revenues | 946,066 | 12,807,829 |
| 43 | 13 | REV | Current Non Fuel Revenues | 9,228,456 | 109,761,611 |
| 44 | 14 | CUST371 | Installation on Customer Premises - Direct Assignment | - | - |
| 45 | 15 | CUST373 | Street Lighting and Signal Systems - Direct Assignment | - | - |
| 46 | 16 | CUST_DEP | Customer Deposits | (8,927) | (28,041) |
| 47 | 17 | NFREV | Non-Fuel Revenues | 9,228,456 | 109,761,611 |
| 48 | 18 | ST_LIGHTS | Streetlight Energy - kWh at generation | - | - |
| 49 | 19 | CUST902 | 902-Meter Reading Expenses | 8,100 | 55,083 |
| 50 | 20 | CUST903 | 903-Customer Records and Collection Expenses | 8,100 | 55,083 |
| 51 | 21 | _EXP904 | Uncollectible Percentages | 1.75% | 4.11% |
| 52 | | SERVICES | Number of Services | 1,906 | 29,775 |
| 53 | | SVCCOST | Marginal Capital Cost for Secondary Service | 2,388 | 679 |
| 54 | 22 | WTD_SERV | Customer Weighted Service Costs | 4,552,263 | 20,212,429 |
| 55 | | | Number of Meters | 8,100 | 55,083 |
| 56 | | MTRCOST | Marginal Capital Cost for Meters | 196 | 499 |
| 57 | 23 | WTD_METE | Customer Weighted Meter Costs | 1,589,674 | 27,493,492 |
| 58 | 24 | CUSTS | Annual Number of Customers | 8,100 | 55,083 |
| 59 | | | Annual Customers | 0.01135 | 0.07716 |
| 60 | | | Annual kWh @ Meter | 0.00073 | 0.01866 |
| 61 | 25 | CUSTEXP | Weighted Customer/Energy Allocator | 0.01208 | 0.09582 |
| 62 | 26 | 36B_Dedicated | Dedicated 36B Allocator | - | - |
| 63 | 27 | | | | |
| 64 | | | | | |
| 65 | | | | | |
| 66 | | **DEPENDENT ALLOCATORS** | | | |
| 67 | 19 | NP_PRO_DTOT | Net Plant with GI - Production-Demand | 6,496,347 | 133,117,255 |
| 68 | 20 | NP_PRO_EFTOT | Net Plant with GI - Production-Energy-Fuel | - | - |
| 69 | 21 | NP_PRO_ENFTOT | Net Plant with GI - Production-Energy-Non-Fuel | - | - |
| 70 | 22 | NP_STO_PRO_DTOT | Net Plant with GI - Storage-Production-Demand | 1,017,793 | 20,855,699 |
| 71 | 23 | NP_STO_TRA_DTOT | Net Plant with GI - Storage-Transmission-Demand | 257,766 | 5,256,089 |
| 72 | 24 | NP_STO_DIS_DSUBTOT | Net Plant with GI - Storage-Distribution-Demand-Subs | 84,530 | 1,852,253 |
| 73 | 25 | NP_STO_DIS_DPRITOT | Net Plant with GI - Storage-Distribution-Demand-Primary | 208,859 | 4,576,594 |
| 74 | 26 | NP_STO_DIS_DSECTOT | Net Plant with GI - Storage-Distribution-Demand-Secondary | - | - |
| 75 | 27 | NP_TRA_DTOT | Net Plant with GI - Transmission-Demand | 2,815,159 | 57,403,757 |
| 76 | 28 | NP_DIS_DSUBTOT | Net Plant with GI - Distribution-Demand-Subs | 2,513,091 | 55,067,738 |
| 77 | 29 | NP_DIS_DPRITOT | Net Plant with GI - Distribution-Demand-Primary | 6,223,340 | 136,368,045 |
| 78 | 30 | NP_DIS_DSECTOT | Net Plant with GI - Distribution-Demand-Secondary | 2,862,748 | 62,729,557 |
| 1 | 31 | NP_DIS_CSRVTOT | Net Plant with GI - Distribution-Customer-Services | 2,576,044 | 11,437,850 |

This schedule is sponsored by PNM Witness Larkin

**PUBLIC SERVICE OF NEW MEXICO**
**Test Period Ending September 30th, 2028**

| Class_Factors Line No. | Factor No. | | | Schedule 2B Small Power | Schedule 3B General Power |
|---|---|---|---|---|---|
| 41 | 11 | ENERGY4 | Energy - kWh at Meter (Non-renewable only) | 10,745,912 | 1,166,008,602 |
| 42 | 12 | FUELREV | Current Fuel Revenues | 274,031 | 19,529,750 |
| 43 | 13 | REV | Current Non Fuel Revenues | 2,154,494 | 123,151,613 |
| 44 | 14 | CUST371 | Installation on Customer Premises - Direct Assignment | - | - |
| 45 | 15 | CUST373 | Street Lighting and Signal Systems - Direct Assignment | - | - |
| 46 | 16 | CUST_DEP | Customer Deposits | (550) | (28,393) |
| 47 | 17 | NFREV | Non-Fuel Revenues | 2,154,494 | 123,151,613 |
| 48 | 18 | ST_LIGHTS | Streetlight Energy - kWh at generation | - | - |
| 49 | 19 | CUST902 | 902-Meter Reading Expenses | 522 | 2,818 |
| 50 | 20 | CUST903 | 903-Customer Records and Collection Expenses | 522 | 2,818 |
| 51 | 21 | _EXP904 | Uncollectible Percentages | 0.08% | 4.16% |
| 52 | | SERVICES | Number of Services | 282 | - |
| 53 | | SVCCOST | Marginal Capital Cost for Secondary Service | 679 | - |
| 54 | 22 | WTD_SERV | Customer Weighted Service Costs | 191,478 | - |
| 55 | | | Number of Meters | 522 | 2,818 |
| 56 | | MTRCOST | Marginal Capital Cost for Meters | 499 | 2,209 |
| 57 | 23 | WTD_METE | Customer Weighted Meter Costs | 260,454 | 6,223,412 |
| 58 | 24 | CUSTS | Annual Number of Customers | 522 | 2,818 |
| 59 | | | Annual Customers | 0.00073 | 0.00395 |
| 60 | | | Annual kWh @ Meter | 0.00026 | 0.02825 |
| 61 | 25 | CUSTEXP | Weighted Customer/Energy Allocator | 0.00099 | 0.03220 |
| 62 | 26 | 36B_Dedicated | Dedicated 36B Allocator | - | - |
| 63 | 27 | | | | |
| 64 | | | | | |
| 65 | | | | | |
| 66 | | **DEPENDENT ALLOCATORS** | | | |
| 67 | 19 | NP_PRO_DTOT | Net Plant with GI - Production-Demand | 1,746,576 | 196,379,440 |
| 68 | 20 | NP_PRO_EFTOT | Net Plant with GI - Production-Energy-Fuel | - | - |
| 69 | 21 | NP_PRO_ENFTOT | Net Plant with GI - Production-Energy-Non-Fuel | - | - |
| 70 | 22 | NP_STO_PRO_DTOT | Net Plant with GI - Storage-Production-Demand | 273,639 | 30,767,090 |
| 71 | 23 | NP_STO_TRA_DTOT | Net Plant with GI - Storage-Transmission-Demand | 55,906 | 7,859,200 |
| 72 | 24 | NP_STO_DIS_DSUBTOT | Net Plant with GI - Storage-Distribution-Demand-Subs | 24,546 | 2,210,299 |
| 73 | 25 | NP_STO_DIS_DPRITOT | Net Plant with GI - Storage-Distribution-Demand-Primary | 60,648 | 5,461,264 |
| 74 | 26 | NP_STO_DIS_DSECTOT | Net Plant with GI - Storage-Distribution-Demand-Secondary | - | - |
| 75 | 27 | NP_TRA_DTOT | Net Plant with GI - Transmission-Demand | 610,571 | 85,833,320 |
| 76 | 28 | NP_DIS_DSUBTOT | Net Plant with GI - Distribution-Demand-Subs | 729,747 | 65,712,498 |
| 77 | 29 | NP_DIS_DPRITOT | Net Plant with GI - Distribution-Demand-Primary | 1,807,122 | 162,728,400 |
| 78 | 30 | NP_DIS_DSECTOT | Net Plant with GI - Distribution-Demand-Secondary | 831,280 | 74,855,371 |
| 1 | 31 | NP_DIS_CSRVTOT | Net Plant with GI - Distribution-Customer-Services | 108,354 | - |

This schedule is sponsored by PNM Witness Larkin

**PUBLIC SERVICE OF NEW MEXICO**
**Test Period Ending September 30th, 2028**

| Class_Factors Line No. | Factor No. | | | Schedule 3C GP Low LF | Schedule 3D General Power Gov |
|---|---|---|---|---|---|
| 41 | 11 | ENERGY4 | Energy - kWh at Meter (Non-renewable only) | 293,112,357 | 88,941,272 |
| 42 | 12 | FUELREV | Current Fuel Revenues | 4,920,667 | 1,486,012 |
| 43 | 13 | REV | Current Non Fuel Revenues | 37,223,540 | 8,607,191 |
| 44 | 14 | CUST371 | Installation on Customer Premises - Direct Assignment | - | - |
| 45 | 15 | CUST373 | Street Lighting and Signal Systems - Direct Assignment | - | - |
| 46 | 16 | CUST_DEP | Customer Deposits | (8,582) | (1,984) |
| 47 | 17 | NFREV | Non-Fuel Revenues | 37,223,540 | 8,607,191 |
| 48 | 18 | ST_LIGHTS | Streetlight Energy - kWh at generation | - | - |
| 49 | 19 | CUST902 | 902-Meter Reading Expenses | 1,273 | 167 |
| 50 | 20 | CUST903 | 903-Customer Records and Collection Expenses | 1,273 | 167 |
| 51 | 21 | _EXP904 | Uncollectible Percentages | 1.26% | 0.29% |
| 52 | | SERVICES | Number of Services | - | - |
| 53 | | SVCCOST | Marginal Capital Cost for Secondary Service | - | - |
| 54 | 22 | WTD_SERV | Customer Weighted Service Costs | - | - |
| 55 | | | Number of Meters | 1,273 | 167 |
| 56 | | MTRCOST | Marginal Capital Cost for Meters | 2,209 | 2,209 |
| 57 | 23 | WTD_METE | Customer Weighted Meter Costs | 2,812,746 | 369,930 |
| 58 | 24 | CUSTS | Annual Number of Customers | 1,273 | 167 |
| 59 | | | Annual Customers | 0.00178 | 0.00023 |
| 60 | | | Annual kWh @ Meter | 0.00710 | 0.00215 |
| 61 | 25 | CUSTEXP | Weighted Customer/Energy Allocator | 0.00889 | 0.00239 |
| 62 | 26 | 36B_Dedicated | Dedicated 36B Allocator | - | - |
| 63 | 27 | | | | |
| 64 | | | | | |
| 65 | | | | | |
| 66 | | **DEPENDENT ALLOCATORS** | | | |
| 67 | 19 | NP_PRO_DTOT | Net Plant with GI - Production-Demand | 45,210,566 | 13,693,533 |
| 68 | 20 | NP_PRO_EFTOT | Net Plant with GI - Production-Energy-Fuel | - | - |
| 69 | 21 | NP_PRO_ENFTOT | Net Plant with GI - Production-Energy-Non-Fuel | - | - |
| 70 | 22 | NP_STO_PRO_DTOT | Net Plant with GI - Storage-Production-Demand | 7,083,214 | 2,145,388 |
| 71 | 23 | NP_STO_TRA_DTOT | Net Plant with GI - Storage-Transmission-Demand | 1,684,362 | 563,167 |
| 72 | 24 | NP_STO_DIS_DSUBTOT | Net Plant with GI - Storage-Distribution-Demand-Subs | 693,648 | 158,404 |
| 73 | 25 | NP_STO_DIS_DPRITOT | Net Plant with GI - Storage-Distribution-Demand-Primary | 1,713,882 | 391,389 |
| 74 | 26 | NP_STO_DIS_DSECTOT | Net Plant with GI - Storage-Distribution-Demand-Secondary | - | - |
| 75 | 27 | NP_TRA_DTOT | Net Plant with GI - Transmission-Demand | 18,395,565 | 6,150,565 |
| 76 | 28 | NP_DIS_DSUBTOT | Net Plant with GI - Distribution-Demand-Subs | 20,622,239 | 4,709,381 |
| 77 | 29 | NP_DIS_DPRITOT | Net Plant with GI - Distribution-Demand-Primary | 51,068,275 | 11,662,165 |
| 78 | 30 | NP_DIS_DSECTOT | Net Plant with GI - Distribution-Demand-Secondary | 23,491,503 | 5,364,618 |
| 1 | 31 | NP_DIS_CSRVTOT | Net Plant with GI - Distribution-Customer-Services | - | - |

This schedule is sponsored by PNM Witness Larkin

**PUBLIC SERVICE OF NEW MEXICO**
**Test Period Ending September 30th, 2028**

| Class_Factors Line No. | Factor No. | | | Schedule 3E GP Low LF Gov |
|---|---|---|---|---|
| 41 | 11 | ENERGY4 | Energy - kWh at Meter (Non-renewable only) | 18,718,795 |
| 42 | 12 | FUELREV | Current Fuel Revenues | 313,800 |
| 43 | 13 | REV | Current Non Fuel Revenues | 2,303,000 |
| 44 | 14 | CUST371 | Installation on Customer Premises - Direct Assignment | - |
| 45 | 15 | CUST373 | Street Lighting and Signal Systems - Direct Assignment | - |
| 46 | 16 | CUST_DEP | Customer Deposits | (531) |
| 47 | 17 | NFREV | Non-Fuel Revenues | 2,303,000 |
| 48 | 18 | ST_LIGHTS | Streetlight Energy - kWh at generation | - |
| 49 | 19 | CUST902 | 902-Meter Reading Expenses | 73 |
| 50 | 20 | CUST903 | 903-Customer Records and Collection Expenses | 73 |
| 51 | 21 | _EXP904 | Uncollectible Percentages | 0.08% |
| 52 | | SERVICES | Number of Services | - |
| 53 | | SVCCOST | Marginal Capital Cost for Secondary Service | - |
| 54 | 22 | WTD_SERV | Customer Weighted Service Costs | - |
| 55 | | | Number of Meters | 73 |
| 56 | | MTRCOST | Marginal Capital Cost for Meters | 2,209 |
| 57 | 23 | WTD_METE | Customer Weighted Meter Costs | 160,896 |
| 58 | 24 | CUSTS | Annual Number of Customers | 73 |
| 59 | | | Annual Customers | 0.00010 |
| 60 | | | Annual kWh @ Meter | 0.00045 |
| 61 | 25 | CUSTEXP | Weighted Customer/Energy Allocator | 0.00056 |
| 62 | 26 | 36B_Dedicated | Dedicated 36B Allocator | - |
| 63 | 27 | | | |
| 64 | | | | |
| 65 | | | | |
| 66 | | **DEPENDENT ALLOCATORS** | | |
| 67 | 19 | NP_PRO_DTOT | Net Plant with GI - Production-Demand | 2,892,153 |
| 68 | 20 | NP_PRO_EFTOT | Net Plant with GI - Production-Energy-Fuel | - |
| 69 | 21 | NP_PRO_ENFTOT | Net Plant with GI - Production-Energy-Non-Fuel | - |
| 70 | 22 | NP_STO_PRO_DTOT | Net Plant with GI - Storage-Production-Demand | 453,118 |
| 71 | 23 | NP_STO_TRA_DTOT | Net Plant with GI - Storage-Transmission-Demand | 115,813 |
| 72 | 24 | NP_STO_DIS_DSUBTOT | Net Plant with GI - Storage-Distribution-Demand-Subs | 44,812 |
| 73 | 25 | NP_STO_DIS_DPRITOT | Net Plant with GI - Storage-Distribution-Demand-Primary | 110,722 |
| 74 | 26 | NP_STO_DIS_DSECTOT | Net Plant with GI - Storage-Distribution-Demand-Secondary | - |
| 75 | 27 | NP_TRA_DTOT | Net Plant with GI - Transmission-Demand | 1,264,838 |
| 76 | 28 | NP_DIS_DSUBTOT | Net Plant with GI - Distribution-Demand-Subs | 1,332,254 |
| 77 | 29 | NP_DIS_DPRITOT | Net Plant with GI - Distribution-Demand-Primary | 3,299,151 |
| 78 | 30 | NP_DIS_DSECTOT | Net Plant with GI - Distribution-Demand-Secondary | 1,517,616 |
| 1 | 31 | NP_DIS_CSRVTOT | Net Plant with GI - Distribution-Customer-Services | - |

This schedule is sponsored by PNM Witness Larkin

**PUBLIC SERVICE OF NEW MEXICO**
**Test Period Ending September 30th, 2028**

| Class_Factors Line No. | Factor No. | | | Schedule 3F GP Charging Stations | Schedule 4 Large Power |
|---|---|---|---|---|---|
| 41 | 11 | ENERGY4 | Energy - kWh at Meter (Non-renewable only) | 8,138,066 | 816,147,690 |
| 42 | 12 | FUELREV | Current Fuel Revenues | 136,447 | 13,374,713 |
| 43 | 13 | REV | Current Non Fuel Revenues | 941,870 | 67,116,066 |
| 44 | 14 | CUST371 | Installation on Customer Premises - Direct Assignment | - | - |
| 45 | 15 | CUST373 | Street Lighting and Signal Systems - Direct Assignment | - | - |
| 46 | 16 | CUST_DEP | Customer Deposits | (217) | - |
| 47 | 17 | NFREV | Non-Fuel Revenues | 941,870 | 67,116,066 |
| 48 | 18 | ST_LIGHTS | Streetlight Energy - kWh at generation | - | - |
| 49 | 19 | CUST902 | 902-Meter Reading Expenses | 22 | 159 |
| 50 | 20 | CUST903 | 903-Customer Records and Collection Expenses | 22 | 159 |
| 51 | 21 | _EXP904 | Uncollectible Percentages | 0.03% | 2.40% |
| 52 | | SERVICES | Number of Services | - | - |
| 53 | | SVCCOST | Marginal Capital Cost for Secondary Service | - | - |
| 54 | 22 | WTD_SERV | Customer Weighted Service Costs | - | - |
| 55 | | | Number of Meters | 22 | 159 |
| 56 | | MTRCOST | Marginal Capital Cost for Meters | 2,209 | 11,441 |
| 57 | 23 | WTD_METE | Customer Weighted Meter Costs | 49,692 | 1,816,652 |
| 58 | 24 | CUSTS | Annual Number of Customers | 22 | 159 |
| 59 | | | Annual Customers | 0.00003 | 0.00022 |
| 60 | | | Annual kWh @ Meter | 0.00020 | 0.01977 |
| 61 | 25 | CUSTEXP | Weighted Customer/Energy Allocator | 0.00023 | 0.01999 |
| 62 | 26 | 36B_Dedicated | Dedicated 36B Allocator | - | - |
| 63 | 27 | | | | |
| 64 | | | | | |
| 65 | | | | | |
| 66 | | **DEPENDENT ALLOCATORS** | | | |
| 67 | 19 | NP_PRO_DTOT | Net Plant with GI - Production-Demand | 1,129,340 | 115,888,200 |
| 68 | 20 | NP_PRO_EFTOT | Net Plant with GI - Production-Energy-Fuel | - | - |
| 69 | 21 | NP_PRO_ENFTOT | Net Plant with GI - Production-Energy-Non-Fuel | - | - |
| 70 | 22 | NP_STO_PRO_DTOT | Net Plant with GI - Storage-Production-Demand | 176,936 | 18,156,395 |
| 71 | 23 | NP_STO_TRA_DTOT | Net Plant with GI - Storage-Transmission-Demand | 42,377 | 4,595,488 |
| 72 | 24 | NP_STO_DIS_DSUBTOT | Net Plant with GI - Storage-Distribution-Demand-Subs | 29,811 | 1,150,031 |
| 73 | 25 | NP_STO_DIS_DPRITOT | Net Plant with GI - Storage-Distribution-Demand-Primary | 73,657 | 2,841,525 |
| 74 | 26 | NP_STO_DIS_DSECTOT | Net Plant with GI - Storage-Distribution-Demand-Secondary | - | - |
| 75 | 27 | NP_TRA_DTOT | Net Plant with GI - Transmission-Demand | 462,811 | 50,189,073 |
| 76 | 28 | NP_DIS_DSUBTOT | Net Plant with GI - Distribution-Demand-Subs | 886,274 | 34,190,571 |
| 77 | 29 | NP_DIS_DPRITOT | Net Plant with GI - Distribution-Demand-Primary | 2,194,740 | 84,668,474 |
| 78 | 30 | NP_DIS_DSECTOT | Net Plant with GI - Distribution-Demand-Secondary | 1,009,585 | - |
| 1 | 31 | NP_DIS_CSRVTOT | Net Plant with GI - Distribution-Customer-Services | - | - |

This schedule is sponsored by PNM Witness Larkin

**PUBLIC SERVICE OF NEW MEXICO**
**Test Period Ending September 30th, 2028**

| Class_Factors Line No. | Factor No. | | | Schedule 5 Industrial Power | Schedule 10 Irrigation |
|---|---|---|---|---|---|
| 41 | 11 | ENERGY4 | Energy - kWh at Meter (Non-renewable only) | - | 20,085,254 |
| 42 | 12 | FUELREV | Current Fuel Revenues | - | 334,643 |
| 43 | 13 | REV | Current Non Fuel Revenues | - | 2,258,961 |
| 44 | 14 | CUST371 | Installation on Customer Premises - Direct Assignment | - | - |
| 45 | 15 | CUST373 | Street Lighting and Signal Systems - Direct Assignment | - | - |
| 46 | 16 | CUST_DEP | Customer Deposits | - | - |
| 47 | 17 | NFREV | Non-Fuel Revenues | - | 2,258,961 |
| 48 | 18 | ST_LIGHTS | Streetlight Energy - kWh at generation | - | - |
| 49 | 19 | CUST902 | 902-Meter Reading Expenses | - | 316 |
| 50 | 20 | CUST903 | 903-Customer Records and Collection Expenses | - | 316 |
| 51 | 21 | _EXP904 | Uncollectible Percentages | 0.00% | 0.00% |
| 52 | | SERVICES | Number of Services | - | - |
| 53 | | SVCCOST | Marginal Capital Cost for Secondary Service | - | - |
| 54 | 22 | WTD_SERV | Customer Weighted Service Costs | - | - |
| 55 | | | Number of Meters | - | 316 |
| 56 | | MTRCOST | Marginal Capital Cost for Meters | 11,441 | 2,209 |
| 57 | 23 | WTD_METE | Customer Weighted Meter Costs | - | 697,022 |
| 58 | 24 | CUSTS | Annual Number of Customers | - | 316 |
| 59 | | | Annual Customers | - | 0.00044 |
| 60 | | | Annual kWh @ Meter | - | 0.00049 |
| 61 | 25 | CUSTEXP | Weighted Customer/Energy Allocator | - | 0.00093 |
| 62 | 26 | 36B_Dedicated | Dedicated 36B Allocator | - | - |
| 63 | 27 | | | | |
| 64 | | | | | |
| 65 | | | | | |
| 66 | | **DEPENDENT ALLOCATORS** | | | |
| 67 | 19 | NP_PRO_DTOT | Net Plant with GI - Production-Demand | - | 3,068,835 |
| 68 | 20 | NP_PRO_EFTOT | Net Plant with GI - Production-Energy-Fuel | - | - |
| 69 | 21 | NP_PRO_ENFTOT | Net Plant with GI - Production-Energy-Non-Fuel | - | - |
| 70 | 22 | NP_STO_PRO_DTOT | Net Plant with GI - Storage-Production-Demand | - | 480,799 |
| 71 | 23 | NP_STO_TRA_DTOT | Net Plant with GI - Storage-Transmission-Demand | - | 109,530 |
| 72 | 24 | NP_STO_DIS_DSUBTOT | Net Plant with GI - Storage-Distribution-Demand-Subs | - | 45,781 |
| 73 | 25 | NP_STO_DIS_DPRITOT | Net Plant with GI - Storage-Distribution-Demand-Primary | - | 113,117 |
| 74 | 26 | NP_STO_DIS_DSECTOT | Net Plant with GI - Storage-Distribution-Demand-Secondary | - | - |
| 75 | 27 | NP_TRA_DTOT | Net Plant with GI - Transmission-Demand | - | 1,196,221 |
| 76 | 28 | NP_DIS_DSUBTOT | Net Plant with GI - Distribution-Demand-Subs | - | 1,361,082 |
| 77 | 29 | NP_DIS_DPRITOT | Net Plant with GI - Distribution-Demand-Primary | - | 3,370,542 |
| 78 | 30 | NP_DIS_DSECTOT | Net Plant with GI - Distribution-Demand-Secondary | - | 1,550,456 |
| 1 | 31 | NP_DIS_CSRVTOT | Net Plant with GI - Distribution-Customer-Services | - | - |

This schedule is sponsored by PNM Witness Larkin

**PUBLIC SERVICE OF NEW MEXICO**
**Test Period Ending September 30th, 2028**

| Class_Factors Line No. | Factor No. | | | Schedule 11 Water & Sewage | Schedule 15 Industrial Power |
|---|---|---|---|---|---|
| 41 | 11 | ENERGY4 | Energy - kWh at Meter (Non-renewable only) | 136,496,598 | 59,889,010.52 |
| 42 | 12 | FUELREV | Current Fuel Revenues | 2,230,594 | 955,056.75 |
| 43 | 13 | REV | Current Non Fuel Revenues | 8,035,388 | 4,258,972.10 |
| 44 | 14 | CUST371 | Installation on Customer Premises - Direct Assignment | - | - |
| 45 | 15 | CUST373 | Street Lighting and Signal Systems - Direct Assignment | - | - |
| 46 | 16 | CUST_DEP | Customer Deposits | - | - |
| 47 | 17 | NFREV | Non-Fuel Revenues | 8,035,388 | 4,258,972.10 |
| 48 | 18 | ST_LIGHTS | Streetlight Energy - kWh at generation | - | - |
| 49 | 19 | CUST902 | 902-Meter Reading Expenses | 115 | 1.00 |
| 50 | 20 | CUST903 | 903-Customer Records and Collection Expenses | 115 | 1.00 |
| 51 | 21 | _EXP904 | Uncollectible Percentages | 0.00% | - |
| 52 | | SERVICES | Number of Services | - | - |
| 53 | | SVCCOST | Marginal Capital Cost for Secondary Service | - | - |
| 54 | 22 | WTD_SERV | Customer Weighted Service Costs | - | - |
| 55 | | | Number of Meters | 115 | 1.00 |
| 56 | | MTRCOST | Marginal Capital Cost for Meters | 11,441 | 11,440.91 |
| 57 | 23 | WTD_METE | Customer Weighted Meter Costs | 1,312,844 | 11,440.91 |
| 58 | 24 | CUSTS | Annual Number of Customers | 115 | 1.00 |
| 59 | | | Annual Customers | 0.00016 | 0.00 |
| 60 | | | Annual kWh @ Meter | 0.00331 | 0.00 |
| 61 | 25 | CUSTEXP | Weighted Customer/Energy Allocator | 0.00347 | 0.00 |
| 62 | 26 | 36B_Dedicated | Dedicated 36B Allocator | - | - |
| 63 | 27 | | | | |
| 64 | | | | | |
| 65 | | | | | |
| 66 | | **DEPENDENT ALLOCATORS** | | | |
| 67 | 19 | NP_PRO_DTOT | Net Plant with GI - Production-Demand | 8,934,297 | 6,857,022.30 |
| 68 | 20 | NP_PRO_EFTOT | Net Plant with GI - Production-Energy-Fuel | - | - |
| 69 | 21 | NP_PRO_ENFTOT | Net Plant with GI - Production-Energy-Non-Fuel | - | - |
| 70 | 22 | NP_STO_PRO_DTOT | Net Plant with GI - Storage-Production-Demand | 1,399,751 | 1,074,300.96 |
| 71 | 23 | NP_STO_TRA_DTOT | Net Plant with GI - Storage-Transmission-Demand | 429,736 | 275,573.27 |
| 72 | 24 | NP_STO_DIS_DSUBTOT | Net Plant with GI - Storage-Distribution-Demand-Subs | 293,895 | - |
| 73 | 25 | NP_STO_DIS_DPRITOT | Net Plant with GI - Storage-Distribution-Demand-Primary | 726,162 | - |
| 74 | 26 | NP_STO_DIS_DSECTOT | Net Plant with GI - Storage-Distribution-Demand-Secondary | - | - |
| 75 | 27 | NP_TRA_DTOT | Net Plant with GI - Transmission-Demand | 4,693,315 | 3,009,640.84 |
| 76 | 28 | NP_DIS_DSUBTOT | Net Plant with GI - Distribution-Demand-Subs | 8,737,526 | - |
| 77 | 29 | NP_DIS_DPRITOT | Net Plant with GI - Distribution-Demand-Primary | 21,637,339 | - |
| 78 | 30 | NP_DIS_DSECTOT | Net Plant with GI - Distribution-Demand-Secondary | - | - |
| 1 | 31 | NP_DIS_CSRVTOT | Net Plant with GI - Distribution-Customer-Services | - | - |

This schedule is sponsored by PNM Witness Larkin

**PUBLIC SERVICE OF NEW MEXICO**
**Test Period Ending September 30th, 2028**

| Class_Factors Line No. | Factor No. | | | Schedule 30 Industrial Power | Schedule 33B Large Service |
|---|---|---|---|---|---|
| 41 | 11 | ENERGY4 | Energy - kWh at Meter (Non-renewable only) | 595,415,179 | 11,037,575 |
| 42 | 12 | FUELREV | Current Fuel Revenues | 9,605,918 | 139,057 |
| 43 | 13 | REV | Current Non Fuel Revenues | 32,052,215 | 1,337,400 |
| 44 | 14 | CUST371 | Installation on Customer Premises - Direct Assignment | - | - |
| 45 | 15 | CUST373 | Street Lighting and Signal Systems - Direct Assignment | - | - |
| 46 | 16 | CUST_DEP | Customer Deposits | - | - |
| 47 | 17 | NFREV | Non-Fuel Revenues | 32,052,215 | 1,337,400 |
| 48 | 18 | ST_LIGHTS | Streetlight Energy - kWh at generation | - | - |
| 49 | 19 | CUST902 | 902-Meter Reading Expenses | 1 | 10 |
| 50 | 20 | CUST903 | 903-Customer Records and Collection Expenses | 1 | 10 |
| 51 | 21 | _EXP904 | Uncollectible Percentages | 0.00% | 0.00% |
| 52 | | SERVICES | Number of Services | - | - |
| 53 | | SVCCOST | Marginal Capital Cost for Secondary Service | - | - |
| 54 | 22 | WTD_SERV | Customer Weighted Service Costs | - | - |
| 55 | | | Number of Meters | 1 | 10 |
| 56 | | MTRCOST | Marginal Capital Cost for Meters | 11,441 | 11,441 |
| 57 | 23 | WTD_METE | Customer Weighted Meter Costs | 11,441 | 114,409 |
| 58 | 24 | CUSTS | Annual Number of Customers | 1 | 10 |
| 59 | | | Annual Customers | 0.00000 | 0.00001 |
| 60 | | | Annual kWh @ Meter | 0.01442 | 0.00027 |
| 61 | 25 | CUSTEXP | Weighted Customer/Energy Allocator | 0.01443 | 0.00028 |
| 62 | 26 | 36B_Dedicated | Dedicated 36B Allocator | - | - |
| 63 | 27 | | | | |
| 64 | | | | | |
| 65 | | | | | |
| 66 | | **DEPENDENT ALLOCATORS** | | | |
| 67 | 19 | NP_PRO_DTOT | Net Plant with GI - Production-Demand | 70,679,158 | 876,372 |
| 68 | 20 | NP_PRO_EFTOT | Net Plant with GI - Production-Energy-Fuel | - | - |
| 69 | 21 | NP_PRO_ENFTOT | Net Plant with GI - Production-Energy-Non-Fuel | - | - |
| 70 | 22 | NP_STO_PRO_DTOT | Net Plant with GI - Storage-Production-Demand | 11,073,420 | 137,303 |
| 71 | 23 | NP_STO_TRA_DTOT | Net Plant with GI - Storage-Transmission-Demand | 2,832,053 | 41,166 |
| 72 | 24 | NP_STO_DIS_DSUBTOT | Net Plant with GI - Storage-Distribution-Demand-Subs | 611,338 | - |
| 73 | 25 | NP_STO_DIS_DPRITOT | Net Plant with GI - Storage-Distribution-Demand-Primary | - | - |
| 74 | 26 | NP_STO_DIS_DSECTOT | Net Plant with GI - Storage-Distribution-Demand-Secondary | - | - |
| 75 | 27 | NP_TRA_DTOT | Net Plant with GI - Transmission-Demand | 30,929,936 | 449,588 |
| 76 | 28 | NP_DIS_DSUBTOT | Net Plant with GI - Distribution-Demand-Subs | 18,175,156 | - |
| 77 | 29 | NP_DIS_DPRITOT | Net Plant with GI - Distribution-Demand-Primary | - | - |
| 78 | 30 | NP_DIS_DSECTOT | Net Plant with GI - Distribution-Demand-Secondary | - | - |
| 1 | 31 | NP_DIS_CSRVTOT | Net Plant with GI - Distribution-Customer-Services | - | - |

This schedule is sponsored by PNM Witness Larkin

**PUBLIC SERVICE OF NEW MEXICO**
**Test Period Ending September 30th, 2028**

| Class_Factors Line No. | Factor No. | | | Schedule 35B Lg Power Service | Schedule 36B Special Service Rate |
|---|---|---|---|---|---|
| 41 | 11 | ENERGY4 | Energy - kWh at Meter (Non-renewable only) | 248,575,772 | 1,207,718,596 |
| 42 | 12 | FUELREV | Current Fuel Revenues | 4,009,090 | 17,074,758 |
| 43 | 13 | REV | Current Non Fuel Revenues | 14,292,144 | 58,169,054 |
| 44 | 14 | CUST371 | Installation on Customer Premises - Direct Assignment | - | - |
| 45 | 15 | CUST373 | Street Lighting and Signal Systems - Direct Assignment | - | - |
| 46 | 16 | CUST_DEP | Customer Deposits | - | - |
| 47 | 17 | NFREV | Non-Fuel Revenues | 14,292,144 | 58,169,054 |
| 48 | 18 | ST_LIGHTS | Streetlight Energy - kWh at generation | - | - |
| 49 | 19 | CUST902 | 902-Meter Reading Expenses | 5 | 1 |
| 50 | 20 | CUST903 | 903-Customer Records and Collection Expenses | 5 | 1 |
| 51 | 21 | _EXP904 | Uncollectible Percentages | 0.00% | 0.00% |
| 52 | | SERVICES | Number of Services | - | - |
| 53 | | SVCCOST | Marginal Capital Cost for Secondary Service | - | - |
| 54 | 22 | WTD_SERV | Customer Weighted Service Costs | - | - |
| 55 | | | Number of Meters | 5 | 1 |
| 56 | | MTRCOST | Marginal Capital Cost for Meters | 11,441 | 11,441 |
| 57 | 23 | WTD_METE | Customer Weighted Meter Costs | 57,205 | 11,441 |
| 58 | 24 | CUSTS | Annual Number of Customers | 5 | 1 |
| 59 | | | Annual Customers | 0.00001 | 0.00000 |
| 60 | | | Annual kWh @ Meter | 0.00602 | 0.02926 |
| 61 | 25 | CUSTEXP | Weighted Customer/Energy Allocator | 0.00603 | 0.02926 |
| 62 | 26 | 36B_Dedicated | Dedicated 36B Allocator | - | - |
| 63 | 27 | | | | |
| 64 | | | | | |
| 65 | | | | | |
| 66 | | **DEPENDENT ALLOCATORS** | | | |
| 67 | 19 | NP_PRO_DTOT | Net Plant with GI - Production-Demand | 29,742,258 | - |
| 68 | 20 | NP_PRO_EFTOT | Net Plant with GI - Production-Energy-Fuel | - | - |
| 69 | 21 | NP_PRO_ENFTOT | Net Plant with GI - Production-Energy-Non-Fuel | - | - |
| 70 | 22 | NP_STO_PRO_DTOT | Net Plant with GI - Storage-Production-Demand | 4,659,768 | - |
| 71 | 23 | NP_STO_TRA_DTOT | Net Plant with GI - Storage-Transmission-Demand | 1,179,804 | 14,647,654 |
| 72 | 24 | NP_STO_DIS_DSUBTOT | Net Plant with GI - Storage-Distribution-Demand-Subs | 283,922 | - |
| 73 | 25 | NP_STO_DIS_DPRITOT | Net Plant with GI - Storage-Distribution-Demand-Primary | - | - |
| 74 | 26 | NP_STO_DIS_DSECTOT | Net Plant with GI - Storage-Distribution-Demand-Secondary | - | - |
| 75 | 27 | NP_TRA_DTOT | Net Plant with GI - Transmission-Demand | 12,885,093 | 159,972,620 |
| 76 | 28 | NP_DIS_DSUBTOT | Net Plant with GI - Distribution-Demand-Subs | 8,441,044 | - |
| 77 | 29 | NP_DIS_DPRITOT | Net Plant with GI - Distribution-Demand-Primary | - | - |
| 78 | 30 | NP_DIS_DSECTOT | Net Plant with GI - Distribution-Demand-Secondary | - | - |
| 1 | 31 | NP_DIS_CSRVTOT | Net Plant with GI - Distribution-Customer-Services | - | - |

This schedule is sponsored by PNM Witness Larkin

**PUBLIC SERVICE OF NEW MEXICO**
**Test Period Ending September 30th, 2028**

| Class_Factors Line No. | Factor No. | | | Schedule 6 Priv. Area Light | Schedule 20 Streetlighting |
|---|---|---|---|---|---|
| 41 | 11 | ENERGY4 | Energy - kWh at Meter (Non-renewable only) | 9,329,761 | 10,675,468 |
| 42 | 12 | FUELREV | Current Fuel Revenues | 156,211 | 89,338 |
| 43 | 13 | REV | Current Non Fuel Revenues | 2,463,478 | 4,187,973 |
| 44 | 14 | CUST371 | Installation on Customer Premises - Direct Assignment | 1 | - |
| 45 | 15 | CUST373 | Street Lighting and Signal Systems - Direct Assignment | - | 1 |
| 46 | 16 | CUST_DEP | Customer Deposits | - | - |
| 47 | 17 | NFREV | Non-Fuel Revenues | 2,463,478 | 4,187,973 |
| 48 | 18 | ST_LIGHTS | Streetlight Energy - kWh at generation | 13,689,902 | 36,659,739 |
| 49 | 19 | CUST902 | 902-Meter Reading Expenses | - | - |
| 50 | 20 | CUST903 | 903-Customer Records and Collection Expenses | - | - |
| 51 | 21 | _EXP904 | Uncollectible Percentages | 0.00% | 0.00% |
| 52 | | SERVICES | Number of Services | - | - |
| 53 | | SVCCOST | Marginal Capital Cost for Secondary Service | - | - |
| 54 | 22 | WTD_SERV | Customer Weighted Service Costs | - | - |
| 55 | | | Number of Meters | - | - |
| 56 | | MTRCOST | Marginal Capital Cost for Meters | - | 499 |
| 57 | 23 | WTD_METE | Customer Weighted Meter Costs | - | - |
| 58 | 24 | CUSTS | Annual Number of Customers | - | - |
| 59 | | | Annual Customers | - | - |
| 60 | | | Annual kWh @ Meter | 0.00023 | 0.00026 |
| 61 | 25 | CUSTEXP | Weighted Customer/Energy Allocator | 0.00023 | 0.00026 |
| 62 | 26 | 36B_Dedicated | Dedicated 36B Allocator | 1 | - |
| 63 | 27 | | | | |
| 64 | | | | | |
| 65 | | | | | |
| 66 | | **DEPENDENT ALLOCATORS** | | | |
| 67 | 19 | NP_PRO_DTOT | Net Plant with GI - Production-Demand | 445,530 | 513,324 |
| 68 | 20 | NP_PRO_EFTOT | Net Plant with GI - Production-Energy-Fuel | - | - |
| 69 | 21 | NP_PRO_ENFTOT | Net Plant with GI - Production-Energy-Non-Fuel | - | - |
| 70 | 22 | NP_STO_PRO_DTOT | Net Plant with GI - Storage-Production-Demand | 69,802 | 80,423 |
| 71 | 23 | NP_STO_TRA_DTOT | Net Plant with GI - Storage-Transmission-Demand | 55,609 | 85,211 |
| 72 | 24 | NP_STO_DIS_DSUBTOT | Net Plant with GI - Storage-Distribution-Demand-Subs | 27,008 | 31,533 |
| 73 | 25 | NP_STO_DIS_DPRITOT | Net Plant with GI - Storage-Distribution-Demand-Primary | 66,733 | 77,913 |
| 74 | 26 | NP_STO_DIS_DSECTOT | Net Plant with GI - Storage-Distribution-Demand-Secondary | - | - |
| 75 | 27 | NP_TRA_DTOT | Net Plant with GI - Transmission-Demand | 607,323 | 930,620 |
| 76 | 28 | NP_DIS_DSUBTOT | Net Plant with GI - Distribution-Demand-Subs | 802,964 | 937,488 |
| 77 | 29 | NP_DIS_DPRITOT | Net Plant with GI - Distribution-Demand-Primary | 1,988,435 | 2,321,566 |
| 78 | 30 | NP_DIS_DSECTOT | Net Plant with GI - Distribution-Demand-Secondary | 914,684 | 1,067,925 |
| 1 | 31 | NP_DIS_CSRVTOT | Net Plant with GI - Distribution-Customer-Services | - | - |

This schedule is sponsored by PNM Witness Larkin

**PUBLIC SERVICE OF NEW MEXICO**
**Test Period Ending September 30th, 2028**

| Line No. | Factor No. | Class_Factors | | dule 20-Customer O<br>Streetlighting |
|---|---|---|---|---|
| 41 | 11 | ENERGY4 | Energy - kWh at Meter (Non-renewable only) | 14,305,403 |
| 42 | 12 | FUELREV | Current Fuel Revenues | 328,052 |
| 43 | 13 | REV | Current Non Fuel Revenues | 1,251,380 |
| 44 | 14 | CUST371 | Installation on Customer Premises - Direct Assignment | - |
| 45 | 15 | CUST373 | Street Lighting and Signal Systems - Direct Assignment | - |
| 46 | 16 | CUST_DEP | Customer Deposits | - |
| 47 | 17 | NFREV | Non-Fuel Revenues | 1,251,380 |
| 48 | 18 | ST_LIGHTS | Streetlight Energy - kWh at generation | |
| 49 | 19 | CUST902 | 902-Meter Reading Expenses | - |
| 50 | 20 | CUST903 | 903-Customer Records and Collection Expenses | - |
| 51 | 21 | _EXP904 | Uncollectible Percentages | 0.00% |
| 52 | | SERVICES | Number of Services | - |
| 53 | | SVCCOST | Marginal Capital Cost for Secondary Service | - |
| 54 | 22 | WTD_SERV | Customer Weighted Service Costs | - |
| 55 | | | Number of Meters | - |
| 56 | | MTRCOST | Marginal Capital Cost for Meters | 499 |
| 57 | 23 | WTD_METE | Customer Weighted Meter Costs | - |
| 58 | 24 | CUSTS | Annual Number of Customers | - |
| 59 | | | Annual Customers | - |
| 60 | | | Annual kWh @ Meter | 0.00035 |
| 61 | 25 | CUSTEXP | Weighted Customer/Energy Allocator | 0.00035 |
| 62 | 26 | 36B_Dedicated | Dedicated 36B Allocator | - |
| 63 | 27 | | | |
| 64 | | | | |
| 65 | | | | |
| 66 | | **DEPENDENT ALLOCATORS** | | |
| 67 | 19 | NP_PRO_DTOT | Net Plant with GI - Production-Demand | 687,868 |
| 68 | 20 | NP_PRO_EFTOT | Net Plant with GI - Production-Energy-Fuel | - |
| 69 | 21 | NP_PRO_ENFTOT | Net Plant with GI - Production-Energy-Non-Fuel | - |
| 70 | 22 | NP_STO_PRO_DTOT | Net Plant with GI - Storage-Production-Demand | 107,769 |
| 71 | 23 | NP_STO_TRA_DTOT | Net Plant with GI - Storage-Transmission-Demand | 63,589 |
| 72 | 24 | NP_STO_DIS_DSUBTOT | Net Plant with GI - Storage-Distribution-Demand-Subs | 42,255 |
| 73 | 25 | NP_STO_DIS_DPRITOT | Net Plant with GI - Storage-Distribution-Demand-Primary | 104,406 |
| 74 | 26 | NP_STO_DIS_DSECTOT | Net Plant with GI - Storage-Distribution-Demand-Secondary | - |
| 75 | 27 | NP_TRA_DTOT | Net Plant with GI - Transmission-Demand | 694,479 |
| 76 | 28 | NP_DIS_DSUBTOT | Net Plant with GI - Distribution-Demand-Subs | 1,256,258 |
| 77 | 29 | NP_DIS_DPRITOT | Net Plant with GI - Distribution-Demand-Primary | 3,110,959 |
| 78 | 30 | NP_DIS_DSECTOT | Net Plant with GI - Distribution-Demand-Secondary | 1,431,047 |
| 1 | 31 | NP_DIS_CSRVTOT | Net Plant with GI - Distribution-Customer-Services | - |

This schedule is sponsored by PNM Witness Larkin

**PUBLIC SERVICE OF NEW MEXICO**
**Test Period Ending September 30th, 2028**

| Line No. | Class_Factors Factor No. | | | Other Input |
|---|---|---|---|---|
| 2 | 32 | NP_DIS_CMTRTOT | Net Plant with GI - Distribution-Customer-Meters | |
| 3 | 33 | NP_DIS_CMTRRTOT | Net Plant with GI - Distribution-Customer-Meter Reading | |
| 4 | 34 | NP_DIS_CBILTOT | Net Plant with GI - Distribution-Customer-Billing & Collections | |
| 5 | 35 | NP_DIS_CINFTOT | Net Plant with GI - Distribution-Customer-Service & Info | |
| 6 | 36 | NP_DIS_COTHTOT | Net Plant with GI - Distribution-Customer-Other | |
| 7 | 37 | NP_PRO_D_GI | Net GI Plant - Production-Demand | |
| 8 | 38 | NP_PRO_EF_GI | Net GI Plant - Production-Energy-Fuel | |
| 9 | 39 | NP_PRO_ENF_GI | Net GI Plant - Production-Energy-Non-Fuel | |
| 10 | 40 | NP_STO_PRO_D_GI | Net GI Plant - Storage-Production-Demand | |
| 11 | 41 | NP_STO_TRA_D_GI | Net GI Plant - Storage-Transmission-Demand | |
| 12 | 42 | NP_STO_DIS_DSUB_GI | Net GI Plant - Storage-Distribution-Demand-Subs | |
| 13 | 43 | NP_STO_DIS_DPRI_GI | Net GI Plant - Storage-Distribution-Demand-Primary | |
| 14 | 44 | NP_STO_DIS_DSEC_GI | Net GI Plant - Storage-Distribution-Demand-Secondary | |
| 15 | 45 | NP_TRA_D_GI | Net GI Plant - Transmission-Demand | |
| 16 | 46 | NP_DIS_DSUB_GI | Net GI Plant - Distribution-Demand-Subs | |
| 17 | 47 | NP_DIS_DPRI_GI | Net GI Plant - Distribution-Demand-Primary | |
| 18 | 48 | NP_DIS_DSEC_GI | Net GI Plant - Distribution-Demand-Secondary | |
| 19 | 49 | NP_DIS_CSRV_GI | Net GI Plant - Distribution-Customer-Services | |
| 20 | 50 | NP_DIS_CMTR_GI | Net GI Plant - Distribution-Customer-Meters | |
| 21 | 51 | NP_DIS_CMTRR_GI | Net GI Plant - Distribution-Customer-Meter Reading | |
| 22 | 52 | NP_DIS_CBIL_GI | Net GI Plant - Distribution-Customer-Billing & Collections | |
| 23 | 53 | NP_DIS_CINF_GI | Net GI Plant - Distribution-Customer-Service & Info | |
| 24 | 54 | NP_DIS_COTH_GI | Net GI Plant - Distribution-Customer-Other | |
| 25 | 55 | NP_DIS_SVCSMTRS | Net Plant - Distribution-Customer-Services and Meters | |
| 26 | 56 | 5819_PROD | Accts 581-589 - Production-Demand | |
| 27 | 57 | 5819_PROEF | Accts 581-589 - Production-Energy-Fuel | |
| 28 | 58 | 5819_PROENF | Accts 581-589 - Production-Energy-Non-Fuel | |
| 29 | 59 | 5819_STO_PRO_D | Accts 581-589 - Storage-Production-Demand | |
| 30 | 60 | 5819_STO_TRA_D | Accts 581-589 - Storage-Transmission-Demand | |
| 31 | 61 | 5819_STO_DIS_DSUB | Accts 581-589 - Storage-Distribution-Demand-Subs | |
| 32 | 62 | 5819_STO_DIS_DPRI | Accts 581-589 - Storage-Distribution-Demand-Primary | |
| 33 | 63 | 5819_STO_DIS_DSEC | Accts 581-589 - Storage-Distribution-Demand-Secondary | |
| 34 | 64 | 5819_TRAD | Accts 581-589 - Transmission-Demand | |
| 35 | 65 | 5819_DISDSUB | Accts 581-589 - Distribution-Demand-Subs | |
| 36 | 66 | 5819_DISDPRI | Accts 581-589 - Distribution-Demand-Primary | |
| 37 | 67 | 5819_DISDSEC | Accts 581-589 - Distribution-Demand-Secondary | |
| 38 | 68 | 5819_DISCSRV | Accts 581-589 - Distribution-Customer-Services | |
| 39 | 69 | 5819_DISCMTR | Accts 581-589 - Distribution-Customer-Meters | |
| 40 | 70 | 5819_DISCMTRR | Accts 581-589 - Distribution-Customer-Meter Reading | |

This schedule is sponsored by PNM Witness Larkin

**PUBLIC SERVICE OF NEW MEXICO**
**Test Period Ending September 30th, 2028**

| Class_Factors | | | | | Schedule 1 |
|---|---|---|---|---|---|
| Line No. | Factor No. | | | PNM Retail | Residential |
| 2 | 32 | NP_DIS_CMTRTOT | Net Plant with GI - Distribution-Customer-Meters | 130,578,710 | 90,929,786 |
| 3 | 33 | NP_DIS_CMTRRTOT | Net Plant with GI - Distribution-Customer-Meter Reading | 17,695,592 | 15,567,889 |
| 4 | 34 | NP_DIS_CBILTOT | Net Plant with GI - Distribution-Customer-Billing & Collections | 26,129,633 | 22,987,828 |
| 5 | 35 | NP_DIS_CINFTOT | Net Plant with GI - Distribution-Customer-Service & Info | - | - |
| 6 | 36 | NP_DIS_COTHTOT | Net Plant with GI - Distribution-Customer-Other | 55,253,034 | 21,673,429 |
| 7 | 37 | NP_PRO_D_GI | Net GI Plant - Production-Demand | 37,949,643 | 18,422,096 |
| 8 | 38 | NP_PRO_EF_GI | Net GI Plant - Production-Energy-Fuel | - | - |
| 9 | 39 | NP_PRO_ENF_GI | Net GI Plant - Production-Energy-Non-Fuel | - | - |
| 10 | 40 | NP_STO_PRO_D_GI | Net GI Plant - Storage-Production-Demand | - | - |
| 11 | 41 | NP_STO_TRA_D_GI | Net GI Plant - Storage-Transmission-Demand | - | - |
| 12 | 42 | NP_STO_DIS_DSUB_GI | Net GI Plant - Storage-Distribution-Demand-Subs | - | - |
| 13 | 43 | NP_STO_DIS_DPRI_GI | Net GI Plant - Storage-Distribution-Demand-Primary | - | - |
| 14 | 44 | NP_STO_DIS_DSEC_GI | Net GI Plant - Storage-Distribution-Demand-Secondary | - | - |
| 15 | 45 | NP_TRA_D_GI | Net GI Plant - Transmission-Demand | 13,661,275 | 5,144,415 |
| 16 | 46 | NP_DIS_DSUB_GI | Net GI Plant - Distribution-Demand-Subs | 16,483,408 | 8,269,219 |
| 17 | 47 | NP_DIS_DPRI_GI | Net GI Plant - Distribution-Demand-Primary | 40,692,540 | 21,690,127 |
| 18 | 48 | NP_DIS_DSEC_GI | Net GI Plant - Distribution-Demand-Secondary | 16,831,677 | 9,977,499 |
| 19 | 49 | NP_DIS_CSRV_GI | Net GI Plant - Distribution-Customer-Services | 3,045,308 | 2,798,001 |
| 20 | 50 | NP_DIS_CMTR_GI | Net GI Plant - Distribution-Customer-Meters | 25,015,796 | 17,419,999 |
| 21 | 51 | NP_DIS_CMTRR_GI | Net GI Plant - Distribution-Customer-Meter Reading | 17,695,592 | 15,567,889 |
| 22 | 52 | NP_DIS_CBIL_GI | Net GI Plant - Distribution-Customer-Billing & Collections | 26,129,633 | 22,987,828 |
| 23 | 53 | NP_DIS_CINF_GI | Net GI Plant - Distribution-Customer-Service & Info | - | - |
| 24 | 54 | NP_DIS_COTH_GI | Net GI Plant - Distribution-Customer-Other | 28,824,208 | 21,673,429 |
| 25 | 55 | NP_DIS_SVCSMTRS | Net Plant - Distribution-Customer-Services and Meters | | |
| 26 | 56 | 5819_PROD | Accts 581-589 - Production-Demand | - | - |
| 27 | 57 | 5819_PROEF | Accts 581-589 - Production-Energy-Fuel | - | - |
| 28 | 58 | 5819_PROENF | Accts 581-589 - Production-Energy-Non-Fuel | - | - |
| 29 | 59 | 5819_STO_PRO_D | Accts 581-589 - Storage-Production-Demand | - | - |
| 30 | 60 | 5819_STO_TRA_D | Accts 581-589 - Storage-Transmission-Demand | - | - |
| 31 | 61 | 5819_STO_DIS_DSUB | Accts 581-589 - Storage-Distribution-Demand-Subs | - | - |
| 32 | 62 | 5819_STO_DIS_DPRI | Accts 581-589 - Storage-Distribution-Demand-Primary | - | - |
| 33 | 63 | 5819_STO_DIS_DSEC | Accts 581-589 - Storage-Distribution-Demand-Secondary | - | - |
| 34 | 64 | 5819_TRAD | Accts 581-589 - Transmission-Demand | - | - |
| 35 | 65 | 5819_DISDSUB | Accts 581-589 - Distribution-Demand-Subs | 6,801,723 | 3,412,216 |
| 36 | 66 | 5819_DISDPRI | Accts 581-589 - Distribution-Demand-Primary | 16,857,182 | 8,985,294 |
| 37 | 67 | 5819_DISDSEC | Accts 581-589 - Distribution-Demand-Secondary | 6,972,645 | 4,133,252 |
| 38 | 68 | 5819_DISCSRV | Accts 581-589 - Distribution-Customer-Services | 2,158,936 | 1,983,611 |
| 39 | 69 | 5819_DISCMTR | Accts 581-589 - Distribution-Customer-Meters | 12,181,315 | 8,482,580 |
| 40 | 70 | 5819_DISCMTRR | Accts 581-589 - Distribution-Customer-Meter Reading | - | - |

This schedule is sponsored by PNM Witness Larkin

**PUBLIC SERVICE OF NEW MEXICO**
**Test Period Ending September 30th, 2028**

| Class_Factors Line No. | Factor No. | | | Schedule 1B Residential | Schedule 2 Small Power |
|---|---|---|---|---|---|
| 2 | 32 | NP_DIS_CMTRTOT | Net Plant with GI - Distribution-Customer-Meters | 1,466,034 | 25,355,145 |
| 3 | 33 | NP_DIS_CMTRRTOT | Net Plant with GI - Distribution-Customer-Meter Reading | 250,997 | 1,706,812 |
| 4 | 34 | NP_DIS_CBILTOT | Net Plant with GI - Distribution-Customer-Billing & Collections | 370,626 | 2,520,309 |
| 5 | 35 | NP_DIS_CINFTOT | Net Plant with GI - Distribution-Customer-Service & Info | - | - |
| 6 | 36 | NP_DIS_COTHTOT | Net Plant with GI - Distribution-Customer-Other | 340,004 | 2,696,454 |
| 7 | 37 | NP_PRO_D_GI | Net GI Plant - Production-Demand | 198,725 | 4,072,093 |
| 8 | 38 | NP_PRO_EF_GI | Net GI Plant - Production-Energy-Fuel | - | - |
| 9 | 39 | NP_PRO_ENF_GI | Net GI Plant - Production-Energy-Non-Fuel | - | - |
| 10 | 40 | NP_STO_PRO_D_GI | Net GI Plant - Storage-Production-Demand | - | - |
| 11 | 41 | NP_STO_TRA_D_GI | Net GI Plant - Storage-Transmission-Demand | - | - |
| 12 | 42 | NP_STO_DIS_DSUB_GI | Net GI Plant - Storage-Distribution-Demand-Subs | - | - |
| 13 | 43 | NP_STO_DIS_DPRI_GI | Net GI Plant - Storage-Distribution-Demand-Primary | - | - |
| 14 | 44 | NP_STO_DIS_DSEC_GI | Net GI Plant - Storage-Distribution-Demand-Secondary | - | - |
| 15 | 45 | NP_TRA_D_GI | Net GI Plant - Transmission-Demand | 54,679 | 1,114,951 |
| 16 | 46 | NP_DIS_DSUB_GI | Net GI Plant - Distribution-Demand-Subs | 91,553 | 2,006,148 |
| 17 | 47 | NP_DIS_DPRI_GI | Net GI Plant - Distribution-Demand-Primary | 240,144 | 5,262,117 |
| 18 | 48 | NP_DIS_DSEC_GI | Net GI Plant - Distribution-Demand-Secondary | 110,467 | 2,420,584 |
| 19 | 49 | NP_DIS_CSRV_GI | Net GI Plant - Distribution-Customer-Services | 45,111 | 200,298 |
| 20 | 50 | NP_DIS_CMTR_GI | Net GI Plant - Distribution-Customer-Meters | 280,858 | 4,857,447 |
| 21 | 51 | NP_DIS_CMTRR_GI | Net GI Plant - Distribution-Customer-Meter Reading | 250,997 | 1,706,812 |
| 22 | 52 | NP_DIS_CBIL_GI | Net GI Plant - Distribution-Customer-Billing & Collections | 370,626 | 2,520,309 |
| 23 | 53 | NP_DIS_CINF_GI | Net GI Plant - Distribution-Customer-Service & Info | - | - |
| 24 | 54 | NP_DIS_COTH_GI | Net GI Plant - Distribution-Customer-Other | 340,004 | 2,696,454 |
| 25 | 55 | NP_DIS_SVCSMTRS | Net Plant - Distribution-Customer-Services and Meters | | |
| 26 | 56 | 5819_PROD | Accts 581-589 - Production-Demand | - | - |
| 27 | 57 | 5819_PROEF | Accts 581-589 - Production-Energy-Fuel | - | - |
| 28 | 58 | 5819_PROENF | Accts 581-589 - Production-Energy-Non-Fuel | - | - |
| 29 | 59 | 5819_STO_PRO_D | Accts 581-589 - Storage-Production-Demand | - | - |
| 30 | 60 | 5819_STO_TRA_D | Accts 581-589 - Storage-Transmission-Demand | - | - |
| 31 | 61 | 5819_STO_DIS_DSUB | Accts 581-589 - Storage-Distribution-Demand-Subs | - | - |
| 32 | 62 | 5819_STO_DIS_DPRI | Accts 581-589 - Storage-Distribution-Demand-Primary | - | - |
| 33 | 63 | 5819_STO_DIS_DSEC | Accts 581-589 - Storage-Distribution-Demand-Secondary | - | - |
| 34 | 64 | 5819_TRAD | Accts 581-589 - Transmission-Demand | - | - |
| 35 | 65 | 5819_DISDSUB | Accts 581-589 - Distribution-Demand-Subs | 37,779 | 827,818 |
| 36 | 66 | 5819_DISDPRI | Accts 581-589 - Distribution-Demand-Primary | 99,481 | 2,179,870 |
| 37 | 67 | 5819_DISDSEC | Accts 581-589 - Distribution-Demand-Secondary | 45,762 | 1,002,744 |
| 38 | 68 | 5819_DISCSRV | Accts 581-589 - Distribution-Customer-Services | 31,981 | 141,999 |
| 39 | 69 | 5819_DISCMTR | Accts 581-589 - Distribution-Customer-Meters | 136,762 | 2,365,309 |
| 40 | 70 | 5819_DISCMTRR | Accts 581-589 - Distribution-Customer-Meter Reading | - | - |

This schedule is sponsored by PNM Witness Larkin

**PUBLIC SERVICE OF NEW MEXICO**
**Test Period Ending September 30th, 2028**

| Class_Factors | | | | Schedule 2B | Schedule 3B |
|---|---|---|---|---|---|
| Line No. | Factor No. | | | Small Power | General Power |
| 2 | 32 | NP_DIS_CMTRTOT | Net Plant with GI - Distribution-Customer-Meters | 240,197 | 5,739,377 |
| 3 | 33 | NP_DIS_CMTRRTOT | Net Plant with GI - Distribution-Customer-Meter Reading | 16,169 | 87,309 |
| 4 | 34 | NP_DIS_CBILTOT | Net Plant with GI - Distribution-Customer-Billing & Collections | 23,876 | 128,922 |
| 5 | 35 | NP_DIS_CINFTOT | Net Plant with GI - Distribution-Customer-Service & Info | - | - |
| 6 | 36 | NP_DIS_COTHTOT | Net Plant with GI - Distribution-Customer-Other | 27,897 | 906,005 |
| 7 | 37 | NP_PRO_D_GI | Net GI Plant - Production-Demand | 53,428 | 6,007,300 |
| 8 | 38 | NP_PRO_EF_GI | Net GI Plant - Production-Energy-Fuel | - | - |
| 9 | 39 | NP_PRO_ENF_GI | Net GI Plant - Production-Energy-Non-Fuel | - | - |
| 10 | 40 | NP_STO_PRO_D_GI | Net GI Plant - Storage-Production-Demand | - | - |
| 11 | 41 | NP_STO_TRA_D_GI | Net GI Plant - Storage-Transmission-Demand | - | - |
| 12 | 42 | NP_STO_DIS_DSUB_GI | Net GI Plant - Storage-Distribution-Demand-Subs | - | - |
| 13 | 43 | NP_STO_DIS_DPRI_GI | Net GI Plant - Storage-Distribution-Demand-Primary | - | - |
| 14 | 44 | NP_STO_DIS_DSEC_GI | Net GI Plant - Storage-Distribution-Demand-Secondary | - | - |
| 15 | 45 | NP_TRA_D_GI | Net GI Plant - Transmission-Demand | 11,859 | 1,667,137 |
| 16 | 46 | NP_DIS_DSUB_GI | Net GI Plant - Distribution-Demand-Subs | 26,585 | 2,393,942 |
| 17 | 47 | NP_DIS_DPRI_GI | Net GI Plant - Distribution-Demand-Primary | 69,733 | 6,279,300 |
| 18 | 48 | NP_DIS_DSEC_GI | Net GI Plant - Distribution-Demand-Secondary | 32,077 | 2,888,490 |
| 19 | 49 | NP_DIS_CSRV_GI | Net GI Plant - Distribution-Customer-Services | 1,897 | - |
| 20 | 50 | NP_DIS_CMTR_GI | Net GI Plant - Distribution-Customer-Meters | 46,016 | 1,099,529 |
| 21 | 51 | NP_DIS_CMTRR_GI | Net GI Plant - Distribution-Customer-Meter Reading | 16,169 | 87,309 |
| 22 | 52 | NP_DIS_CBIL_GI | Net GI Plant - Distribution-Customer-Billing & Collections | 23,876 | 128,922 |
| 23 | 53 | NP_DIS_CINF_GI | Net GI Plant - Distribution-Customer-Service & Info | - | - |
| 24 | 54 | NP_DIS_COTH_GI | Net GI Plant - Distribution-Customer-Other | 27,897 | 906,005 |
| 25 | 55 | NP_DIS_SVCSMTRS | Net Plant - Distribution-Customer-Services and Meters | | |
| 26 | 56 | 5819_PROD | Accts 581-589 - Production-Demand | - | - |
| 27 | 57 | 5819_PROEF | Accts 581-589 - Production-Energy-Fuel | - | - |
| 28 | 58 | 5819_PROENF | Accts 581-589 - Production-Energy-Non-Fuel | - | - |
| 29 | 59 | 5819_STO_PRO_D | Accts 581-589 - Storage-Production-Demand | - | - |
| 30 | 60 | 5819_STO_TRA_D | Accts 581-589 - Storage-Transmission-Demand | - | - |
| 31 | 61 | 5819_STO_DIS_DSUB | Accts 581-589 - Storage-Distribution-Demand-Subs | - | - |
| 32 | 62 | 5819_STO_DIS_DPRI | Accts 581-589 - Storage-Distribution-Demand-Primary | - | - |
| 33 | 63 | 5819_STO_DIS_DSEC | Accts 581-589 - Storage-Distribution-Demand-Secondary | - | - |
| 34 | 64 | 5819_TRAD | Accts 581-589 - Transmission-Demand | - | - |
| 35 | 65 | 5819_DISDSUB | Accts 581-589 - Distribution-Demand-Subs | 10,970 | 987,838 |
| 36 | 66 | 5819_DISDPRI | Accts 581-589 - Distribution-Demand-Primary | 28,887 | 2,601,246 |
| 37 | 67 | 5819_DISDSEC | Accts 581-589 - Distribution-Demand-Secondary | 13,288 | 1,196,578 |
| 38 | 68 | 5819_DISCSRV | Accts 581-589 - Distribution-Customer-Services | 1,345 | - |
| 39 | 69 | 5819_DISCMTR | Accts 581-589 - Distribution-Customer-Meters | 22,407 | 535,410 |
| 40 | 70 | 5819_DISCMTRR | Accts 581-589 - Distribution-Customer-Meter Reading | - | - |

This schedule is sponsored by PNM Witness Larkin

**PUBLIC SERVICE OF NEW MEXICO**
**Test Period Ending September 30th, 2028**

| Class_Factors Line No. | Factor No. | | | Schedule 3C GP Low LF | Schedule 3D General Power Gov |
|---|---|---|---|---|---|
| 2 | 32 | NP_DIS_CMTRTOT | Net Plant with GI - Distribution-Customer-Meters | 2,593,980 | 341,158 |
| 3 | 33 | NP_DIS_CMTRRTOT | Net Plant with GI - Distribution-Customer-Meter Reading | 39,460 | 5,190 |
| 4 | 34 | NP_DIS_CBILTOT | Net Plant with GI - Distribution-Customer-Billing & Collections | 58,268 | 7,663 |
| 5 | 35 | NP_DIS_CINFTOT | Net Plant with GI - Distribution-Customer-Service & Info | - | - |
| 6 | 36 | NP_DIS_COTHTOT | Net Plant with GI - Distribution-Customer-Other | 250,032 | 67,238 |
| 7 | 37 | NP_PRO_D_GI | Net GI Plant - Production-Demand | 1,383,003 | 418,889 |
| 8 | 38 | NP_PRO_EF_GI | Net GI Plant - Production-Energy-Fuel | - | - |
| 9 | 39 | NP_PRO_ENF_GI | Net GI Plant - Production-Energy-Non-Fuel | - | - |
| 10 | 40 | NP_STO_PRO_D_GI | Net GI Plant - Storage-Production-Demand | - | - |
| 11 | 41 | NP_STO_TRA_D_GI | Net GI Plant - Storage-Transmission-Demand | - | - |
| 12 | 42 | NP_STO_DIS_DSUB_GI | Net GI Plant - Storage-Distribution-Demand-Subs | - | - |
| 13 | 43 | NP_STO_DIS_DPRI_GI | Net GI Plant - Storage-Distribution-Demand-Primary | - | - |
| 14 | 44 | NP_STO_DIS_DSEC_GI | Net GI Plant - Storage-Distribution-Demand-Secondary | - | - |
| 15 | 45 | NP_TRA_D_GI | Net GI Plant - Transmission-Demand | 357,296 | 119,462 |
| 16 | 46 | NP_DIS_DSUB_GI | Net GI Plant - Distribution-Demand-Subs | 751,279 | 171,565 |
| 17 | 47 | NP_DIS_DPRI_GI | Net GI Plant - Distribution-Demand-Primary | 1,970,603 | 450,015 |
| 18 | 48 | NP_DIS_DSEC_GI | Net GI Plant - Distribution-Demand-Secondary | 906,481 | 207,008 |
| 19 | 49 | NP_DIS_CSRV_GI | Net GI Plant - Distribution-Customer-Services | - | - |
| 20 | 50 | NP_DIS_CMTR_GI | Net GI Plant - Distribution-Customer-Meters | 496,945 | 65,358 |
| 21 | 51 | NP_DIS_CMTRR_GI | Net GI Plant - Distribution-Customer-Meter Reading | 39,460 | 5,190 |
| 22 | 52 | NP_DIS_CBIL_GI | Net GI Plant - Distribution-Customer-Billing & Collections | 58,268 | 7,663 |
| 23 | 53 | NP_DIS_CINF_GI | Net GI Plant - Distribution-Customer-Service & Info | - | - |
| 24 | 54 | NP_DIS_COTH_GI | Net GI Plant - Distribution-Customer-Other | 250,032 | 67,238 |
| 25 | 55 | NP_DIS_SVCSMTRS | Net Plant - Distribution-Customer-Services and Meters | | |
| 26 | 56 | 5819_PROD | Accts 581-589 - Production-Demand | - | - |
| 27 | 57 | 5819_PROEF | Accts 581-589 - Production-Energy-Fuel | - | - |
| 28 | 58 | 5819_PROENF | Accts 581-589 - Production-Energy-Non-Fuel | - | - |
| 29 | 59 | 5819_STO_PRO_D | Accts 581-589 - Storage-Production-Demand | - | - |
| 30 | 60 | 5819_STO_TRA_D | Accts 581-589 - Storage-Transmission-Demand | - | - |
| 31 | 61 | 5819_STO_DIS_DSUB | Accts 581-589 - Storage-Distribution-Demand-Subs | - | - |
| 32 | 62 | 5819_STO_DIS_DPRI | Accts 581-589 - Storage-Distribution-Demand-Primary | - | - |
| 33 | 63 | 5819_STO_DIS_DSEC | Accts 581-589 - Storage-Distribution-Demand-Secondary | - | - |
| 34 | 64 | 5819_TRAD | Accts 581-589 - Transmission-Demand | - | - |
| 35 | 65 | 5819_DISDSUB | Accts 581-589 - Distribution-Demand-Subs | 310,008 | 70,795 |
| 36 | 66 | 5819_DISDPRI | Accts 581-589 - Distribution-Demand-Primary | 816,337 | 186,422 |
| 37 | 67 | 5819_DISDSEC | Accts 581-589 - Distribution-Demand-Secondary | 375,516 | 85,754 |
| 38 | 68 | 5819_DISCSRV | Accts 581-589 - Distribution-Customer-Services | - | - |
| 39 | 69 | 5819_DISCMTR | Accts 581-589 - Distribution-Customer-Meters | 241,985 | 31,826 |
| 40 | 70 | 5819_DISCMTRR | Accts 581-589 - Distribution-Customer-Meter Reading | - | - |

This schedule is sponsored by PNM Witness Larkin

**PUBLIC SERVICE OF NEW MEXICO**
**Test Period Ending September 30th, 2028**

| Class_Factors Line No. | Factor No. | | | Schedule 3E GP Low LF Gov |
|---|---|---|---|---|
| 2 | 32 | NP_DIS_CMTRTOT | Net Plant with GI - Distribution-Customer-Meters | 148,382 |
| 3 | 33 | NP_DIS_CMTRRTOT | Net Plant with GI - Distribution-Customer-Meter Reading | 2,257 |
| 4 | 34 | NP_DIS_CBILTOT | Net Plant with GI - Distribution-Customer-Billing & Collections | 3,333 |
| 5 | 35 | NP_DIS_CINFTOT | Net Plant with GI - Distribution-Customer-Service & Info | - |
| 6 | 36 | NP_DIS_COTHTOT | Net Plant with GI - Distribution-Customer-Other | 15,633 |
| 7 | 37 | NP_PRO_D_GI | Net GI Plant - Production-Demand | 88,472 |
| 8 | 38 | NP_PRO_EF_GI | Net GI Plant - Production-Energy-Fuel | - |
| 9 | 39 | NP_PRO_ENF_GI | Net GI Plant - Production-Energy-Non-Fuel | - |
| 10 | 40 | NP_STO_PRO_D_GI | Net GI Plant - Storage-Production-Demand | - |
| 11 | 41 | NP_STO_TRA_D_GI | Net GI Plant - Storage-Transmission-Demand | - |
| 12 | 42 | NP_STO_DIS_DSUB_GI | Net GI Plant - Storage-Distribution-Demand-Subs | - |
| 13 | 43 | NP_STO_DIS_DPRI_GI | Net GI Plant - Storage-Distribution-Demand-Primary | - |
| 14 | 44 | NP_STO_DIS_DSEC_GI | Net GI Plant - Storage-Distribution-Demand-Secondary | - |
| 15 | 45 | NP_TRA_D_GI | Net GI Plant - Transmission-Demand | 24,567 |
| 16 | 46 | NP_DIS_DSUB_GI | Net GI Plant - Distribution-Demand-Subs | 48,535 |
| 17 | 47 | NP_DIS_DPRI_GI | Net GI Plant - Distribution-Demand-Primary | 127,306 |
| 18 | 48 | NP_DIS_DSEC_GI | Net GI Plant - Distribution-Demand-Secondary | 58,561 |
| 19 | 49 | NP_DIS_CSRV_GI | Net GI Plant - Distribution-Customer-Services | - |
| 20 | 50 | NP_DIS_CMTR_GI | Net GI Plant - Distribution-Customer-Meters | 28,426 |
| 21 | 51 | NP_DIS_CMTRR_GI | Net GI Plant - Distribution-Customer-Meter Reading | 2,257 |
| 22 | 52 | NP_DIS_CBIL_GI | Net GI Plant - Distribution-Customer-Billing & Collections | 3,333 |
| 23 | 53 | NP_DIS_CINF_GI | Net GI Plant - Distribution-Customer-Service & Info | - |
| 24 | 54 | NP_DIS_COTH_GI | Net GI Plant - Distribution-Customer-Other | 15,633 |
| 25 | 55 | NP_DIS_SVCSMTRS | Net Plant - Distribution-Customer-Services and Meters | |
| 26 | 56 | 5819_PROD | Accts 581-589 - Production-Demand | - |
| 27 | 57 | 5819_PROEF | Accts 581-589 - Production-Energy-Fuel | - |
| 28 | 58 | 5819_PROENF | Accts 581-589 - Production-Energy-Non-Fuel | - |
| 29 | 59 | 5819_STO_PRO_D | Accts 581-589 - Storage-Production-Demand | - |
| 30 | 60 | 5819_STO_TRA_D | Accts 581-589 - Storage-Transmission-Demand | - |
| 31 | 61 | 5819_STO_DIS_DSUB | Accts 581-589 - Storage-Distribution-Demand-Subs | - |
| 32 | 62 | 5819_STO_DIS_DPRI | Accts 581-589 - Storage-Distribution-Demand-Primary | - |
| 33 | 63 | 5819_STO_DIS_DSEC | Accts 581-589 - Storage-Distribution-Demand-Secondary | - |
| 34 | 64 | 5819_TRAD | Accts 581-589 - Transmission-Demand | - |
| 35 | 65 | 5819_DISDSUB | Accts 581-589 - Distribution-Demand-Subs | 20,027 |
| 36 | 66 | 5819_DISDPRI | Accts 581-589 - Distribution-Demand-Primary | 52,738 |
| 37 | 67 | 5819_DISDSEC | Accts 581-589 - Distribution-Demand-Secondary | 24,259 |
| 38 | 68 | 5819_DISCSRV | Accts 581-589 - Distribution-Customer-Services | - |
| 39 | 69 | 5819_DISCMTR | Accts 581-589 - Distribution-Customer-Meters | 13,842 |
| 40 | 70 | 5819_DISCMTRR | Accts 581-589 - Distribution-Customer-Meter Reading | - |

This schedule is sponsored by PNM Witness Larkin

**PUBLIC SERVICE OF NEW MEXICO**
**Test Period Ending September 30th, 2028**

| Class_Factors Line No. | Factor No. | | | Schedule 3F GP Charging Stations | Schedule 4 Large Power |
|---|---|---|---|---|---|
| 2 | 32 | NP_DIS_CMTRTOT | Net Plant with GI - Distribution-Customer-Meters | 45,827 | 1,675,359 |
| 3 | 33 | NP_DIS_CMTRRTOT | Net Plant with GI - Distribution-Customer-Meter Reading | 697 | 4,920 |
| 4 | 34 | NP_DIS_CBILTOT | Net Plant with GI - Distribution-Customer-Billing & Collections | 1,029 | 7,265 |
| 5 | 35 | NP_DIS_CINFTOT | Net Plant with GI - Distribution-Customer-Service & Info | - | - |
| 6 | 36 | NP_DIS_COTHTOT | Net Plant with GI - Distribution-Customer-Other | 6,435 | 562,671 |
| 7 | 37 | NP_PRO_D_GI | Net GI Plant - Production-Demand | 34,547 | 3,545,051 |
| 8 | 38 | NP_PRO_EF_GI | Net GI Plant - Production-Energy-Fuel | - | - |
| 9 | 39 | NP_PRO_ENF_GI | Net GI Plant - Production-Energy-Non-Fuel | - | - |
| 10 | 40 | NP_STO_PRO_D_GI | Net GI Plant - Storage-Production-Demand | - | - |
| 11 | 41 | NP_STO_TRA_D_GI | Net GI Plant - Storage-Transmission-Demand | - | - |
| 12 | 42 | NP_STO_DIS_DSUB_GI | Net GI Plant - Storage-Distribution-Demand-Subs | - | - |
| 13 | 43 | NP_STO_DIS_DPRI_GI | Net GI Plant - Storage-Distribution-Demand-Primary | - | - |
| 14 | 44 | NP_STO_DIS_DSEC_GI | Net GI Plant - Storage-Distribution-Demand-Secondary | - | - |
| 15 | 45 | NP_TRA_D_GI | Net GI Plant - Transmission-Demand | 8,989 | 974,820 |
| 16 | 46 | NP_DIS_DSUB_GI | Net GI Plant - Distribution-Demand-Subs | 32,287 | 1,245,581 |
| 17 | 47 | NP_DIS_DPRI_GI | Net GI Plant - Distribution-Demand-Primary | 84,690 | 3,267,154 |
| 18 | 48 | NP_DIS_DSEC_GI | Net GI Plant - Distribution-Demand-Secondary | 38,957 | - |
| 19 | 49 | NP_DIS_CSRV_GI | Net GI Plant - Distribution-Customer-Services | - | - |
| 20 | 50 | NP_DIS_CMTR_GI | Net GI Plant - Distribution-Customer-Meters | 8,779 | 320,959 |
| 21 | 51 | NP_DIS_CMTRR_GI | Net GI Plant - Distribution-Customer-Meter Reading | 697 | 4,920 |
| 22 | 52 | NP_DIS_CBIL_GI | Net GI Plant - Distribution-Customer-Billing & Collections | 1,029 | 7,265 |
| 23 | 53 | NP_DIS_CINF_GI | Net GI Plant - Distribution-Customer-Service & Info | - | - |
| 24 | 54 | NP_DIS_COTH_GI | Net GI Plant - Distribution-Customer-Other | 6,435 | 562,671 |
| 25 | 55 | NP_DIS_SVCSMTRS | Net Plant - Distribution-Customer-Services and Meters | | |
| 26 | 56 | 5819_PROD | Accts 581-589 - Production-Demand | - | - |
| 27 | 57 | 5819_PROEF | Accts 581-589 - Production-Energy-Fuel | - | - |
| 28 | 58 | 5819_PROENF | Accts 581-589 - Production-Energy-Non-Fuel | - | - |
| 29 | 59 | 5819_STO_PRO_D | Accts 581-589 - Storage-Production-Demand | - | - |
| 30 | 60 | 5819_STO_TRA_D | Accts 581-589 - Storage-Transmission-Demand | - | - |
| 31 | 61 | 5819_STO_DIS_DSUB | Accts 581-589 - Storage-Distribution-Demand-Subs | - | - |
| 32 | 62 | 5819_STO_DIS_DPRI | Accts 581-589 - Storage-Distribution-Demand-Primary | - | - |
| 33 | 63 | 5819_STO_DIS_DSEC | Accts 581-589 - Storage-Distribution-Demand-Secondary | - | - |
| 34 | 64 | 5819_TRAD | Accts 581-589 - Transmission-Demand | - | - |
| 35 | 65 | 5819_DISDSUB | Accts 581-589 - Distribution-Demand-Subs | 13,323 | 513,977 |
| 36 | 66 | 5819_DISDPRI | Accts 581-589 - Distribution-Demand-Primary | 35,083 | 1,353,442 |
| 37 | 67 | 5819_DISDSEC | Accts 581-589 - Distribution-Demand-Secondary | 16,138 | - |
| 38 | 68 | 5819_DISCSRV | Accts 581-589 - Distribution-Customer-Services | - | - |
| 39 | 69 | 5819_DISCMTR | Accts 581-589 - Distribution-Customer-Meters | 4,275 | 156,289 |
| 40 | 70 | 5819_DISCMTRR | Accts 581-589 - Distribution-Customer-Meter Reading | - | - |

This schedule is sponsored by PNM Witness Larkin

**PUBLIC SERVICE OF NEW MEXICO**
**Test Period Ending September 30th, 2028**

| Class_Factors Line No. | Factor No. | | | Schedule 5 Industrial Power | Schedule 10 Irrigation |
|---|---|---|---|---|---|
| 2 | 32 | NP_DIS_CMTRTOT | Net Plant with GI - Distribution-Customer-Meters | - | 642,810 |
| 3 | 33 | NP_DIS_CMTRRTOT | Net Plant with GI - Distribution-Customer-Meter Reading | - | 9,779 |
| 4 | 34 | NP_DIS_CBILTOT | Net Plant with GI - Distribution-Customer-Billing & Collections | - | 14,439 |
| 5 | 35 | NP_DIS_CINFTOT | Net Plant with GI - Distribution-Customer-Service & Info | - | - |
| 6 | 36 | NP_DIS_COTHTOT | Net Plant with GI - Distribution-Customer-Other | - | 26,134 |
| 7 | 37 | NP_PRO_D_GI | Net GI Plant - Production-Demand | - | 93,876 |
| 8 | 38 | NP_PRO_EF_GI | Net GI Plant - Production-Energy-Fuel | - | - |
| 9 | 39 | NP_PRO_ENF_GI | Net GI Plant - Production-Energy-Non-Fuel | - | - |
| 10 | 40 | NP_STO_PRO_D_GI | Net GI Plant - Storage-Production-Demand | - | - |
| 11 | 41 | NP_STO_TRA_D_GI | Net GI Plant - Storage-Transmission-Demand | - | - |
| 12 | 42 | NP_STO_DIS_DSUB_GI | Net GI Plant - Storage-Distribution-Demand-Subs | - | - |
| 13 | 43 | NP_STO_DIS_DPRI_GI | Net GI Plant - Storage-Distribution-Demand-Primary | - | - |
| 14 | 44 | NP_STO_DIS_DSEC_GI | Net GI Plant - Storage-Distribution-Demand-Secondary | - | - |
| 15 | 45 | NP_TRA_D_GI | Net GI Plant - Transmission-Demand | - | 23,234 |
| 16 | 46 | NP_DIS_DSUB_GI | Net GI Plant - Distribution-Demand-Subs | - | 49,585 |
| 17 | 47 | NP_DIS_DPRI_GI | Net GI Plant - Distribution-Demand-Primary | - | 130,061 |
| 18 | 48 | NP_DIS_DSEC_GI | Net GI Plant - Distribution-Demand-Secondary | - | 59,828 |
| 19 | 49 | NP_DIS_CSRV_GI | Net GI Plant - Distribution-Customer-Services | - | - |
| 20 | 50 | NP_DIS_CMTR_GI | Net GI Plant - Distribution-Customer-Meters | - | 123,147 |
| 21 | 51 | NP_DIS_CMTRR_GI | Net GI Plant - Distribution-Customer-Meter Reading | - | 9,779 |
| 22 | 52 | NP_DIS_CBIL_GI | Net GI Plant - Distribution-Customer-Billing & Collections | - | 14,439 |
| 23 | 53 | NP_DIS_CINF_GI | Net GI Plant - Distribution-Customer-Service & Info | - | - |
| 24 | 54 | NP_DIS_COTH_GI | Net GI Plant - Distribution-Customer-Other | - | 26,134 |
| 25 | 55 | NP_DIS_SVCSMTRS | Net Plant - Distribution-Customer-Services and Meters | | |
| 26 | 56 | 5819_PROD | Accts 581-589 - Production-Demand | - | - |
| 27 | 57 | 5819_PROEF | Accts 581-589 - Production-Energy-Fuel | - | - |
| 28 | 58 | 5819_PROENF | Accts 581-589 - Production-Energy-Non-Fuel | - | - |
| 29 | 59 | 5819_STO_PRO_D | Accts 581-589 - Storage-Production-Demand | - | - |
| 30 | 60 | 5819_STO_TRA_D | Accts 581-589 - Storage-Transmission-Demand | - | - |
| 31 | 61 | 5819_STO_DIS_DSUB | Accts 581-589 - Storage-Distribution-Demand-Subs | - | - |
| 32 | 62 | 5819_STO_DIS_DPRI | Accts 581-589 - Storage-Distribution-Demand-Primary | - | - |
| 33 | 63 | 5819_STO_DIS_DSEC | Accts 581-589 - Storage-Distribution-Demand-Secondary | - | - |
| 34 | 64 | 5819_TRAD | Accts 581-589 - Transmission-Demand | - | - |
| 35 | 65 | 5819_DISDSUB | Accts 581-589 - Distribution-Demand-Subs | - | 20,461 |
| 36 | 66 | 5819_DISDPRI | Accts 581-589 - Distribution-Demand-Primary | - | 53,879 |
| 37 | 67 | 5819_DISDSEC | Accts 581-589 - Distribution-Demand-Secondary | - | 24,784 |
| 38 | 68 | 5819_DISCSRV | Accts 581-589 - Distribution-Customer-Services | - | - |
| 39 | 69 | 5819_DISCMTR | Accts 581-589 - Distribution-Customer-Meters | - | 59,966 |
| 40 | 70 | 5819_DISCMTRR | Accts 581-589 - Distribution-Customer-Meter Reading | - | - |

This schedule is sponsored by PNM Witness Larkin

**PUBLIC SERVICE OF NEW MEXICO**
**Test Period Ending September 30th, 2028**

| Class_Factors Line No. | Factor No. | | | Schedule 11 Water & Sewage | Schedule 15 Industrial Power |
|---|---|---|---|---|---|
| 2 | 32 | NP_DIS_CMTRTOT | Net Plant with GI - Distribution-Customer-Meters | 1,210,736 | 10,551.08 |
| 3 | 33 | NP_DIS_CMTRRTOT | Net Plant with GI - Distribution-Customer-Meter Reading | 3,556 | 30.99 |
| 4 | 34 | NP_DIS_CBILTOT | Net Plant with GI - Distribution-Customer-Billing & Collections | 5,250 | 45.75 |
| 5 | 35 | NP_DIS_CINFTOT | Net Plant with GI - Distribution-Customer-Service & Info | - | - |
| 6 | 36 | NP_DIS_COTHTOT | Net Plant with GI - Distribution-Customer-Other | 97,581 | 40,868.94 |
| 7 | 37 | NP_PRO_D_GI | Net GI Plant - Production-Demand | 273,303 | 209,758.17 |
| 8 | 38 | NP_PRO_EF_GI | Net GI Plant - Production-Energy-Fuel | - | - |
| 9 | 39 | NP_PRO_ENF_GI | Net GI Plant - Production-Energy-Non-Fuel | - | - |
| 10 | 40 | NP_STO_PRO_D_GI | Net GI Plant - Storage-Production-Demand | - | - |
| 11 | 41 | NP_STO_TRA_D_GI | Net GI Plant - Storage-Transmission-Demand | - | - |
| 12 | 42 | NP_STO_DIS_DSUB_GI | Net GI Plant - Storage-Distribution-Demand-Subs | - | - |
| 13 | 43 | NP_STO_DIS_DPRI_GI | Net GI Plant - Storage-Distribution-Demand-Primary | - | - |
| 14 | 44 | NP_STO_DIS_DSEC_GI | Net GI Plant - Storage-Distribution-Demand-Secondary | - | - |
| 15 | 45 | NP_TRA_D_GI | Net GI Plant - Transmission-Demand | 91,158 | 58,456.13 |
| 16 | 46 | NP_DIS_DSUB_GI | Net GI Plant - Distribution-Demand-Subs | 318,313 | - |
| 17 | 47 | NP_DIS_DPRI_GI | Net GI Plant - Distribution-Demand-Primary | 834,933 | - |
| 18 | 48 | NP_DIS_DSEC_GI | Net GI Plant - Distribution-Demand-Secondary | - | - |
| 19 | 49 | NP_DIS_CSRV_GI | Net GI Plant - Distribution-Customer-Services | - | - |
| 20 | 50 | NP_DIS_CMTR_GI | Net GI Plant - Distribution-Customer-Meters | 231,948 | 2,021.34 |
| 21 | 51 | NP_DIS_CMTRR_GI | Net GI Plant - Distribution-Customer-Meter Reading | 3,556 | 30.99 |
| 22 | 52 | NP_DIS_CBIL_GI | Net GI Plant - Distribution-Customer-Billing & Collections | 5,250 | 45.75 |
| 23 | 53 | NP_DIS_CINF_GI | Net GI Plant - Distribution-Customer-Service & Info | - | - |
| 24 | 54 | NP_DIS_COTH_GI | Net GI Plant - Distribution-Customer-Other | 97,581 | 40,868.94 |
| 25 | 55 | NP_DIS_SVCSMTRS | Net Plant - Distribution-Customer-Services and Meters | | |
| 26 | 56 | 5819_PROD | Accts 581-589 - Production-Demand | - | - |
| 27 | 57 | 5819_PROEF | Accts 581-589 - Production-Energy-Fuel | - | - |
| 28 | 58 | 5819_PROENF | Accts 581-589 - Production-Energy-Non-Fuel | - | - |
| 29 | 59 | 5819_STO_PRO_D | Accts 581-589 - Storage-Production-Demand | - | - |
| 30 | 60 | 5819_STO_TRA_D | Accts 581-589 - Storage-Transmission-Demand | - | - |
| 31 | 61 | 5819_STO_DIS_DSUB | Accts 581-589 - Storage-Distribution-Demand-Subs | - | - |
| 32 | 62 | 5819_STO_DIS_DPRI | Accts 581-589 - Storage-Distribution-Demand-Primary | - | - |
| 33 | 63 | 5819_STO_DIS_DSEC | Accts 581-589 - Storage-Distribution-Demand-Secondary | - | - |
| 34 | 64 | 5819_TRAD | Accts 581-589 - Transmission-Demand | - | - |
| 35 | 65 | 5819_DISDSUB | Accts 581-589 - Distribution-Demand-Subs | 131,349 | - |
| 36 | 66 | 5819_DISDPRI | Accts 581-589 - Distribution-Demand-Primary | 345,877 | - |
| 37 | 67 | 5819_DISDSEC | Accts 581-589 - Distribution-Demand-Secondary | - | - |
| 38 | 68 | 5819_DISCSRV | Accts 581-589 - Distribution-Customer-Services | - | - |
| 39 | 69 | 5819_DISCMTR | Accts 581-589 - Distribution-Customer-Meters | 112,946 | 984.28 |
| 40 | 70 | 5819_DISCMTRR | Accts 581-589 - Distribution-Customer-Meter Reading | - | - |

This schedule is sponsored by PNM Witness Larkin

**PUBLIC SERVICE OF NEW MEXICO**
**Test Period Ending September 30th, 2028**

| Class_Factors Line No. | Factor No. | | | Schedule 30 Industrial Power | Schedule 33B Large Service |
|---|---|---|---|---|---|
| 2 | 32 | NP_DIS_CMTRTOT | Net Plant with GI - Distribution-Customer-Meters | 10,551 | 105,511 |
| 3 | 33 | NP_DIS_CMTRRTOT | Net Plant with GI - Distribution-Customer-Meter Reading | 31 | 310 |
| 4 | 34 | NP_DIS_CBILTOT | Net Plant with GI - Distribution-Customer-Billing & Collections | 46 | 458 |
| 5 | 35 | NP_DIS_CINFTOT | Net Plant with GI - Distribution-Customer-Service & Info | - | - |
| 6 | 36 | NP_DIS_COTHTOT | Net Plant with GI - Distribution-Customer-Other | 405,966 | 7,919 |
| 7 | 37 | NP_PRO_D_GI | Net GI Plant - Production-Demand | 2,162,095 | 26,808 |
| 8 | 38 | NP_PRO_EF_GI | Net GI Plant - Production-Energy-Fuel | - | - |
| 9 | 39 | NP_PRO_ENF_GI | Net GI Plant - Production-Energy-Non-Fuel | - | - |
| 10 | 40 | NP_STO_PRO_D_GI | Net GI Plant - Storage-Production-Demand | - | - |
| 11 | 41 | NP_STO_TRA_D_GI | Net GI Plant - Storage-Transmission-Demand | - | - |
| 12 | 42 | NP_STO_DIS_DSUB_GI | Net GI Plant - Storage-Distribution-Demand-Subs | - | - |
| 13 | 43 | NP_STO_DIS_DPRI_GI | Net GI Plant - Storage-Distribution-Demand-Primary | - | - |
| 14 | 44 | NP_STO_DIS_DSEC_GI | Net GI Plant - Storage-Distribution-Demand-Secondary | - | - |
| 15 | 45 | NP_TRA_D_GI | Net GI Plant - Transmission-Demand | 600,751 | 8,732 |
| 16 | 46 | NP_DIS_DSUB_GI | Net GI Plant - Distribution-Demand-Subs | 662,131 | - |
| 17 | 47 | NP_DIS_DPRI_GI | Net GI Plant - Distribution-Demand-Primary | - | - |
| 18 | 48 | NP_DIS_DSEC_GI | Net GI Plant - Distribution-Demand-Secondary | - | - |
| 19 | 49 | NP_DIS_CSRV_GI | Net GI Plant - Distribution-Customer-Services | - | - |
| 20 | 50 | NP_DIS_CMTR_GI | Net GI Plant - Distribution-Customer-Meters | 2,021 | 20,213 |
| 21 | 51 | NP_DIS_CMTRR_GI | Net GI Plant - Distribution-Customer-Meter Reading | 31 | 310 |
| 22 | 52 | NP_DIS_CBIL_GI | Net GI Plant - Distribution-Customer-Billing & Collections | 46 | 458 |
| 23 | 53 | NP_DIS_CINF_GI | Net GI Plant - Distribution-Customer-Service & Info | - | - |
| 24 | 54 | NP_DIS_COTH_GI | Net GI Plant - Distribution-Customer-Other | 405,966 | 7,919 |
| 25 | 55 | NP_DIS_SVCSMTRS | Net Plant - Distribution-Customer-Services and Meters | | |
| 26 | 56 | 5819_PROD | Accts 581-589 - Production-Demand | - | - |
| 27 | 57 | 5819_PROEF | Accts 581-589 - Production-Energy-Fuel | - | - |
| 28 | 58 | 5819_PROENF | Accts 581-589 - Production-Energy-Non-Fuel | - | - |
| 29 | 59 | 5819_STO_PRO_D | Accts 581-589 - Storage-Production-Demand | - | - |
| 30 | 60 | 5819_STO_TRA_D | Accts 581-589 - Storage-Transmission-Demand | - | - |
| 31 | 61 | 5819_STO_DIS_DSUB | Accts 581-589 - Storage-Distribution-Demand-Subs | - | - |
| 32 | 62 | 5819_STO_DIS_DPRI | Accts 581-589 - Storage-Distribution-Demand-Primary | - | - |
| 33 | 63 | 5819_STO_DIS_DSEC | Accts 581-589 - Storage-Distribution-Demand-Secondary | - | - |
| 34 | 64 | 5819_TRAD | Accts 581-589 - Transmission-Demand | - | - |
| 35 | 65 | 5819_DISDSUB | Accts 581-589 - Distribution-Demand-Subs | 273,222 | - |
| 36 | 66 | 5819_DISDPRI | Accts 581-589 - Distribution-Demand-Primary | - | - |
| 37 | 67 | 5819_DISDSEC | Accts 581-589 - Distribution-Demand-Secondary | - | - |
| 38 | 68 | 5819_DISCSRV | Accts 581-589 - Distribution-Customer-Services | - | - |
| 39 | 69 | 5819_DISCMTR | Accts 581-589 - Distribution-Customer-Meters | 984 | 9,843 |
| 40 | 70 | 5819_DISCMTRR | Accts 581-589 - Distribution-Customer-Meter Reading | - | - |

This schedule is sponsored by PNM Witness Larkin

**PUBLIC SERVICE OF NEW MEXICO**
**Test Period Ending September 30th, 2028**

| Class_Factors Line No. | Factor No. | | | Schedule 35B Lg Power Service | Schedule 36B Special Service Rate |
|---|---|---|---|---|---|
| 2 | 32 | NP_DIS_CMTRTOT | Net Plant with GI - Distribution-Customer-Meters | 52,755 | 10,551 |
| 3 | 33 | NP_DIS_CMTRRTOT | Net Plant with GI - Distribution-Customer-Meter Reading | 155 | 31 |
| 4 | 34 | NP_DIS_CBILTOT | Net Plant with GI - Distribution-Customer-Billing & Collections | 229 | 46 |
| 5 | 35 | NP_DIS_CINFTOT | Net Plant with GI - Distribution-Customer-Service & Info | - | - |
| 6 | 36 | NP_DIS_COTHTOT | Net Plant with GI - Distribution-Customer-Other | 169,664 | 823,405 |
| 7 | 37 | NP_PRO_D_GI | Net GI Plant - Production-Demand | 909,824 | - |
| 8 | 38 | NP_PRO_EF_GI | Net GI Plant - Production-Energy-Fuel | - | - |
| 9 | 39 | NP_PRO_ENF_GI | Net GI Plant - Production-Energy-Non-Fuel | - | - |
| 10 | 40 | NP_STO_PRO_D_GI | Net GI Plant - Storage-Production-Demand | - | - |
| 11 | 41 | NP_STO_TRA_D_GI | Net GI Plant - Storage-Transmission-Demand | - | - |
| 12 | 42 | NP_STO_DIS_DSUB_GI | Net GI Plant - Storage-Distribution-Demand-Subs | - | - |
| 13 | 43 | NP_STO_DIS_DPRI_GI | Net GI Plant - Storage-Distribution-Demand-Primary | - | - |
| 14 | 44 | NP_STO_DIS_DSEC_GI | Net GI Plant - Storage-Distribution-Demand-Secondary | - | - |
| 15 | 45 | NP_TRA_D_GI | Net GI Plant - Transmission-Demand | 250,267 | 3,107,142 |
| 16 | 46 | NP_DIS_DSUB_GI | Net GI Plant - Distribution-Demand-Subs | 307,512 | - |
| 17 | 47 | NP_DIS_DPRI_GI | Net GI Plant - Distribution-Demand-Primary | - | - |
| 18 | 48 | NP_DIS_DSEC_GI | Net GI Plant - Distribution-Demand-Secondary | - | - |
| 19 | 49 | NP_DIS_CSRV_GI | Net GI Plant - Distribution-Customer-Services | - | - |
| 20 | 50 | NP_DIS_CMTR_GI | Net GI Plant - Distribution-Customer-Meters | 10,107 | 2,021 |
| 21 | 51 | NP_DIS_CMTRR_GI | Net GI Plant - Distribution-Customer-Meter Reading | 155 | 31 |
| 22 | 52 | NP_DIS_CBIL_GI | Net GI Plant - Distribution-Customer-Billing & Collections | 229 | 46 |
| 23 | 53 | NP_DIS_CINF_GI | Net GI Plant - Distribution-Customer-Service & Info | - | - |
| 24 | 54 | NP_DIS_COTH_GI | Net GI Plant - Distribution-Customer-Other | 169,664 | 823,405 |
| 25 | 55 | NP_DIS_SVCSMTRS | Net Plant - Distribution-Customer-Services and Meters | | |
| 26 | 56 | 5819_PROD | Accts 581-589 - Production-Demand | - | - |
| 27 | 57 | 5819_PROEF | Accts 581-589 - Production-Energy-Fuel | - | - |
| 28 | 58 | 5819_PROENF | Accts 581-589 - Production-Energy-Non-Fuel | - | - |
| 29 | 59 | 5819_STO_PRO_D | Accts 581-589 - Storage-Production-Demand | - | - |
| 30 | 60 | 5819_STO_TRA_D | Accts 581-589 - Storage-Transmission-Demand | - | - |
| 31 | 61 | 5819_STO_DIS_DSUB | Accts 581-589 - Storage-Distribution-Demand-Subs | - | - |
| 32 | 62 | 5819_STO_DIS_DPRI | Accts 581-589 - Storage-Distribution-Demand-Primary | - | - |
| 33 | 63 | 5819_STO_DIS_DSEC | Accts 581-589 - Storage-Distribution-Demand-Secondary | - | - |
| 34 | 64 | 5819_TRAD | Accts 581-589 - Transmission-Demand | - | - |
| 35 | 65 | 5819_DISDSUB | Accts 581-589 - Distribution-Demand-Subs | 126,892 | - |
| 36 | 66 | 5819_DISDPRI | Accts 581-589 - Distribution-Demand-Primary | - | - |
| 37 | 67 | 5819_DISDSEC | Accts 581-589 - Distribution-Demand-Secondary | - | - |
| 38 | 68 | 5819_DISCSRV | Accts 581-589 - Distribution-Customer-Services | - | - |
| 39 | 69 | 5819_DISCMTR | Accts 581-589 - Distribution-Customer-Meters | 4,921 | 984 |
| 40 | 70 | 5819_DISCMTRR | Accts 581-589 - Distribution-Customer-Meter Reading | - | - |

This schedule is sponsored by PNM Witness Larkin

**PUBLIC SERVICE OF NEW MEXICO**
**Test Period Ending September 30th, 2028**

| Class_Factors Line No. | Factor No. | | | Schedule 6 Priv. Area Light | Schedule 20 Streetlighting |
|---|---|---|---|---|---|
| 2 | 32 | NP_DIS_CMTRTOT | Net Plant with GI - Distribution-Customer-Meters | - | - |
| 3 | 33 | NP_DIS_CMTRRTOT | Net Plant with GI - Distribution-Customer-Meter Reading | - | - |
| 4 | 34 | NP_DIS_CBILTOT | Net Plant with GI - Distribution-Customer-Billing & Collections | - | - |
| 5 | 35 | NP_DIS_CINFTOT | Net Plant with GI - Distribution-Customer-Service & Info | - | - |
| 6 | 36 | NP_DIS_COTHTOT | Net Plant with GI - Distribution-Customer-Other | 373,461 | 26,752,484 |
| 7 | 37 | NP_PRO_D_GI | Net GI Plant - Production-Demand | 13,629 | 15,703 |
| 8 | 38 | NP_PRO_EF_GI | Net GI Plant - Production-Energy-Fuel | - | - |
| 9 | 39 | NP_PRO_ENF_GI | Net GI Plant - Production-Energy-Non-Fuel | - | - |
| 10 | 40 | NP_STO_PRO_D_GI | Net GI Plant - Storage-Production-Demand | - | - |
| 11 | 41 | NP_STO_TRA_D_GI | Net GI Plant - Storage-Transmission-Demand | - | - |
| 12 | 42 | NP_STO_DIS_DSUB_GI | Net GI Plant - Storage-Distribution-Demand-Subs | - | - |
| 13 | 43 | NP_STO_DIS_DPRI_GI | Net GI Plant - Storage-Distribution-Demand-Primary | - | - |
| 14 | 44 | NP_STO_DIS_DSEC_GI | Net GI Plant - Storage-Distribution-Demand-Secondary | - | - |
| 15 | 45 | NP_TRA_D_GI | Net GI Plant - Transmission-Demand | 11,796 | 18,075 |
| 16 | 46 | NP_DIS_DSUB_GI | Net GI Plant - Distribution-Demand-Subs | 29,252 | 34,153 |
| 17 | 47 | NP_DIS_DPRI_GI | Net GI Plant - Distribution-Demand-Primary | 76,729 | 89,584 |
| 18 | 48 | NP_DIS_DSEC_GI | Net GI Plant - Distribution-Demand-Secondary | 35,295 | 41,209 |
| 19 | 49 | NP_DIS_CSRV_GI | Net GI Plant - Distribution-Customer-Services | - | - |
| 20 | 50 | NP_DIS_CMTR_GI | Net GI Plant - Distribution-Customer-Meters | - | - |
| 21 | 51 | NP_DIS_CMTRR_GI | Net GI Plant - Distribution-Customer-Meter Reading | - | - |
| 22 | 52 | NP_DIS_CBIL_GI | Net GI Plant - Distribution-Customer-Billing & Collections | - | - |
| 23 | 53 | NP_DIS_CINF_GI | Net GI Plant - Distribution-Customer-Service & Info | - | - |
| 24 | 54 | NP_DIS_COTH_GI | Net GI Plant - Distribution-Customer-Other | 132,478 | 564,641 |
| 25 | 55 | NP_DIS_SVCSMTRS | Net Plant - Distribution-Customer-Services and Meters | | |
| 26 | 56 | 5819_PROD | Accts 581-589 - Production-Demand | - | - |
| 27 | 57 | 5819_PROEF | Accts 581-589 - Production-Energy-Fuel | - | - |
| 28 | 58 | 5819_PROENF | Accts 581-589 - Production-Energy-Non-Fuel | - | - |
| 29 | 59 | 5819_STO_PRO_D | Accts 581-589 - Storage-Production-Demand | - | - |
| 30 | 60 | 5819_STO_TRA_D | Accts 581-589 - Storage-Transmission-Demand | - | - |
| 31 | 61 | 5819_STO_DIS_DSUB | Accts 581-589 - Storage-Distribution-Demand-Subs | - | - |
| 32 | 62 | 5819_STO_DIS_DPRI | Accts 581-589 - Storage-Distribution-Demand-Primary | - | - |
| 33 | 63 | 5819_STO_DIS_DSEC | Accts 581-589 - Storage-Distribution-Demand-Secondary | - | - |
| 34 | 64 | 5819_TRAD | Accts 581-589 - Transmission-Demand | - | - |
| 35 | 65 | 5819_DISDSUB | Accts 581-589 - Distribution-Demand-Subs | 12,071 | 14,093 |
| 36 | 66 | 5819_DISDPRI | Accts 581-589 - Distribution-Demand-Primary | 31,786 | 37,111 |
| 37 | 67 | 5819_DISDSEC | Accts 581-589 - Distribution-Demand-Secondary | 14,621 | 17,071 |
| 38 | 68 | 5819_DISCSRV | Accts 581-589 - Distribution-Customer-Services | - | - |
| 39 | 69 | 5819_DISCMTR | Accts 581-589 - Distribution-Customer-Meters | - | - |
| 40 | 70 | 5819_DISCMTRR | Accts 581-589 - Distribution-Customer-Meter Reading | - | - |

This schedule is sponsored by PNM Witness Larkin

**PUBLIC SERVICE OF NEW MEXICO**
**Test Period Ending September 30th, 2028**

| Line No. | Factor No. | Class_Factors | | dule 20-Customer O |
|---|---|---|---|---|
| | | | | Streetlighting |
| 2 | 32 | NP_DIS_CMTRTOT | Net Plant with GI - Distribution-Customer-Meters | - |
| 3 | 33 | NP_DIS_CMTRRTOT | Net Plant with GI - Distribution-Customer-Meter Reading | - |
| 4 | 34 | NP_DIS_CBILTOT | Net Plant with GI - Distribution-Customer-Billing & Collections | - |
| 5 | 35 | NP_DIS_CINFTOT | Net Plant with GI - Distribution-Customer-Service & Info | - |
| 6 | 36 | NP_DIS_COTHTOT | Net Plant with GI - Distribution-Customer-Other | 9,753 |
| 7 | 37 | NP_PRO_D_GI | Net GI Plant - Production-Demand | 21,042 |
| 8 | 38 | NP_PRO_EF_GI | Net GI Plant - Production-Energy-Fuel | - |
| 9 | 39 | NP_PRO_ENF_GI | Net GI Plant - Production-Energy-Non-Fuel | - |
| 10 | 40 | NP_STO_PRO_D_GI | Net GI Plant - Storage-Production-Demand | - |
| 11 | 41 | NP_STO_TRA_D_GI | Net GI Plant - Storage-Transmission-Demand | - |
| 12 | 42 | NP_STO_DIS_DSUB_GI | Net GI Plant - Storage-Distribution-Demand-Subs | - |
| 13 | 43 | NP_STO_DIS_DPRI_GI | Net GI Plant - Storage-Distribution-Demand-Primary | - |
| 14 | 44 | NP_STO_DIS_DSEC_GI | Net GI Plant - Storage-Distribution-Demand-Secondary | - |
| 15 | 45 | NP_TRA_D_GI | Net GI Plant - Transmission-Demand | 13,489 |
| 16 | 46 | NP_DIS_DSUB_GI | Net GI Plant - Distribution-Demand-Subs | 45,766 |
| 17 | 47 | NP_DIS_DPRI_GI | Net GI Plant - Distribution-Demand-Primary | 120,044 |
| 18 | 48 | NP_DIS_DSEC_GI | Net GI Plant - Distribution-Demand-Secondary | 55,221 |
| 19 | 49 | NP_DIS_CSRV_GI | Net GI Plant - Distribution-Customer-Services | - |
| 20 | 50 | NP_DIS_CMTR_GI | Net GI Plant - Distribution-Customer-Meters | - |
| 21 | 51 | NP_DIS_CMTRR_GI | Net GI Plant - Distribution-Customer-Meter Reading | - |
| 22 | 52 | NP_DIS_CBIL_GI | Net GI Plant - Distribution-Customer-Billing & Collections | - |
| 23 | 53 | NP_DIS_CINF_GI | Net GI Plant - Distribution-Customer-Service & Info | - |
| 24 | 54 | NP_DIS_COTH_GI | Net GI Plant - Distribution-Customer-Other | 9,753 |
| 25 | 55 | NP_DIS_SVCSMTRS | Net Plant - Distribution-Customer-Services and Meters | |
| 26 | 56 | 5819_PROD | Accts 581-589 - Production-Demand | - |
| 27 | 57 | 5819_PROEF | Accts 581-589 - Production-Energy-Fuel | - |
| 28 | 58 | 5819_PROENF | Accts 581-589 - Production-Energy-Non-Fuel | - |
| 29 | 59 | 5819_STO_PRO_D | Accts 581-589 - Storage-Production-Demand | - |
| 30 | 60 | 5819_STO_TRA_D | Accts 581-589 - Storage-Transmission-Demand | - |
| 31 | 61 | 5819_STO_DIS_DSUB | Accts 581-589 - Storage-Distribution-Demand-Subs | - |
| 32 | 62 | 5819_STO_DIS_DPRI | Accts 581-589 - Storage-Distribution-Demand-Primary | - |
| 33 | 63 | 5819_STO_DIS_DSEC | Accts 581-589 - Storage-Distribution-Demand-Secondary | - |
| 34 | 64 | 5819_TRAD | Accts 581-589 - Transmission-Demand | - |
| 35 | 65 | 5819_DISDSUB | Accts 581-589 - Distribution-Demand-Subs | 18,885 |
| 36 | 66 | 5819_DISDPRI | Accts 581-589 - Distribution-Demand-Primary | 49,729 |
| 37 | 67 | 5819_DISDSEC | Accts 581-589 - Distribution-Demand-Secondary | 22,876 |
| 38 | 68 | 5819_DISCSRV | Accts 581-589 - Distribution-Customer-Services | - |
| 39 | 69 | 5819_DISCMTR | Accts 581-589 - Distribution-Customer-Meters | - |
| 40 | 70 | 5819_DISCMTRR | Accts 581-589 - Distribution-Customer-Meter Reading | - |

This schedule is sponsored by PNM Witness Larkin

**PUBLIC SERVICE OF NEW MEXICO**
**Test Period Ending September 30th, 2028**

| Class_Factors Line No. | Factor No. | | | Other Input |
|---|---|---|---|---|
| 41 | 71 | 5819_DISCBIL | Accts 581-589 - Distribution-Customer-Billing & Collections | |
| 42 | 72 | 5819_DISCINF | Accts 581-589 - Distribution-Customer-Service & Info | |
| 43 | 73 | 5819_DISCOTH | Accts 581-589 - Distribution-Customer-Other | |
| 44 | 74 | 5918_PROD | Accts 591-598 - Production-Demand | |
| 45 | 75 | 5918_PROEF | Accts 591-598 - Production-Energy-Fuel | |
| 46 | 76 | 5918_PROENF | Accts 591-598 - Production-Energy-Non-Fuel | |
| 47 | 77 | 5918_STO_PRO_D | Accts 591-598 - Storage-Production-Demand | |
| 48 | 78 | 5918_STO_TRA_D | Accts 591-598 - Storage-Transmission-Demand | |
| 49 | 79 | 5918_STO_DIS_DSUB | Accts 591-598 - Storage-Distribution-Demand-Subs | |
| 50 | 80 | 5918_STO_DIS_DPRI | Accts 591-598 - Storage-Distribution-Demand-Primary | |
| 51 | 81 | 5918_STO_DIS_DSEC | Accts 591-598 - Storage-Distribution-Demand-Secondary | |
| 52 | 82 | 5918_TRAD | Accts 591-598 - Transmission-Demand | |
| 53 | 83 | 5918_DISDSUB | Accts 591-598 - Distribution-Demand-Subs | |
| 54 | 84 | 5918_DISDPRI | Accts 591-598 - Distribution-Demand-Primary | |
| 55 | 85 | 5918_DISDSEC | Accts 591-598 - Distribution-Demand-Secondary | |
| 56 | 86 | 5918_DISCSRV | Accts 591-598 - Distribution-Customer-Services | |
| 57 | 87 | 5918_DISCMTR | Accts 591-598 - Distribution-Customer-Meters | |
| 58 | 88 | 5918_DISCMTRR | Accts 591-598 - Distribution-Customer-Meter Reading | |
| 59 | 89 | 5918_DISCBIL | Accts 591-598 - Distribution-Customer-Billing & Collections | |
| 60 | 90 | 5918_DISCINF | Accts 591-598 - Distribution-Customer-Service & Info | |
| 61 | 91 | 5918_DISCOTH | Accts 591-598 - Distribution-Customer-Other | |
| 62 | 92 | CACT_DISCMTRR | Cust Accts - Distribution-Customer-Meter Reading | |
| 63 | 93 | CACT_DISCBIL | Cust Accts - Distribution-Customer-Billing & Collections | |
| 64 | 94 | CACT_DISCINF | Cust Accts - Distribution-Customer-Service & Info | |
| 65 | 95 | CACT_DISCOTH | Cust Accts - Distribution-Customer-Other | |
| 66 | 96 | LA_PROD | Labor - Production-Demand | |
| 67 | 97 | LA_PROEF | Labor - Production-Energy-Fuel | |
| 68 | 98 | LA_PROENF | Labor - Production-Energy-Non-Fuel | |
| 69 | 99 | LA_STO_PRO_D | Labor - Storage-Production-Demand | |
| 70 | 100 | LA_STO_TRA_D | Labor - Storage-Transmission-Demand | |
| 71 | 101 | LA_STO_DIS_DSUB | Labor - Storage-Distribution-Demand-Subs | |
| 72 | 102 | LA_STO_DIS_DPRI | Labor - Storage-Distribution-Demand-Primary | |
| 73 | 103 | LA_STO_DIS_DSEC | Labor - Storage-Distribution-Demand-Secondary | |
| 74 | 104 | LA_TRAD | Labor - Transmission-Demand | |
| 75 | 105 | LA_DISDSUB | Labor - Distribution-Demand-Subs | |
| 76 | 106 | LA_DISDPRI | Labor - Distribution-Demand-Primary | |
| 77 | 107 | LA_DISDSEC | Labor - Distribution-Demand-Secondary | |
| 78 | 108 | LA_DISCSRV | Labor - Distribution-Customer-Services | |
| 1 | 109 | LA_DISCMTR | Labor - Distribution-Customer-Meters | |

**PUBLIC SERVICE OF NEW MEXICO**
**Test Period Ending September 30th, 2028**

| Class_Factors Line No. | Factor No. | | | PNM Retail | Schedule 1 Residential |
|---|---|---|---|---|---|
| 41 | 71 | 5819_DISCBIL | Accts 581-589 - Distribution-Customer-Billing & Collections | - | - |
| 42 | 72 | 5819_DISCINF | Accts 581-589 - Distribution-Customer-Service & Info | - | - |
| 43 | 73 | 5819_DISCOTH | Accts 581-589 - Distribution-Customer-Other | 11,846 | 4,647 |
| 44 | 74 | 5918_PROD | Accts 591-598 - Production-Demand | - | - |
| 45 | 75 | 5918_PROEF | Accts 591-598 - Production-Energy-Fuel | - | - |
| 46 | 76 | 5918_PROENF | Accts 591-598 - Production-Energy-Non-Fuel | - | - |
| 47 | 77 | 5918_STO_PRO_D | Accts 591-598 - Storage-Production-Demand | - | - |
| 48 | 78 | 5918_STO_TRA_D | Accts 591-598 - Storage-Transmission-Demand | - | - |
| 49 | 79 | 5918_STO_DIS_DSUB | Accts 591-598 - Storage-Distribution-Demand-Subs | - | - |
| 50 | 80 | 5918_STO_DIS_DPRI | Accts 591-598 - Storage-Distribution-Demand-Primary | - | - |
| 51 | 81 | 5918_STO_DIS_DSEC | Accts 591-598 - Storage-Distribution-Demand-Secondary | - | - |
| 52 | 82 | 5918_TRAD | Accts 591-598 - Transmission-Demand | - | - |
| 53 | 83 | 5918_DISDSUB | Accts 591-598 - Distribution-Demand-Subs | 2,608,490 | 1,308,599 |
| 54 | 84 | 5918_DISDPRI | Accts 591-598 - Distribution-Demand-Primary | 9,879,401 | 5,265,964 |
| 55 | 85 | 5918_DISDSEC | Accts 591-598 - Distribution-Demand-Secondary | 4,086,422 | 2,422,354 |
| 56 | 86 | 5918_DISCSRV | Accts 591-598 - Distribution-Customer-Services | 2,800 | 2,573 |
| 57 | 87 | 5918_DISCMTR | Accts 591-598 - Distribution-Customer-Meters | 6,774,027 | 4,717,161 |
| 58 | 88 | 5918_DISCMTRR | Accts 591-598 - Distribution-Customer-Meter Reading | - | - |
| 59 | 89 | 5918_DISCBIL | Accts 591-598 - Distribution-Customer-Billing & Collections | - | - |
| 60 | 90 | 5918_DISCINF | Accts 591-598 - Distribution-Customer-Service & Info | - | - |
| 61 | 91 | 5918_DISCOTH | Accts 591-598 - Distribution-Customer-Other | 433 | 170 |
| 62 | 92 | CACT_DISCMTRR | Cust Accts - Distribution-Customer-Meter Reading | 9,111,376 | 8,015,832 |
| 63 | 93 | CACT_DISCBIL | Cust Accts - Distribution-Customer-Billing & Collections | 13,454,024 | 11,836,324 |
| 64 | 94 | CACT_DISCINF | Cust Accts - Distribution-Customer-Service & Info | - | - |
| 65 | 95 | CACT_DISCOTH | Cust Accts - Distribution-Customer-Other | 2,149,321 | 1,655,364 |
| 66 | 96 | LA_PROD | Labor - Production-Demand | 12,527,691 | 6,081,383 |
| 67 | 97 | LA_PROEF | Labor - Production-Energy-Fuel | - | - |
| 68 | 98 | LA_PROENF | Labor - Production-Energy-Non-Fuel | - | - |
| 69 | 99 | LA_STO_PRO_D | Labor - Storage-Production-Demand | - | - |
| 70 | 100 | LA_STO_TRA_D | Labor - Storage-Transmission-Demand | - | - |
| 71 | 101 | LA_STO_DIS_DSUB | Labor - Storage-Distribution-Demand-Subs | - | - |
| 72 | 102 | LA_STO_DIS_DPRI | Labor - Storage-Distribution-Demand-Primary | - | - |
| 73 | 103 | LA_STO_DIS_DSEC | Labor - Storage-Distribution-Demand-Secondary | - | - |
| 74 | 104 | LA_TRAD | Labor - Transmission-Demand | 4,052,249 | 1,525,952 |
| 75 | 105 | LA_DISDSUB | Labor - Distribution-Demand-Subs | 4,067,881 | 2,040,731 |
| 76 | 106 | LA_DISDPRI | Labor - Distribution-Demand-Primary | 10,042,367 | 5,352,829 |
| 77 | 107 | LA_DISDSEC | Labor - Distribution-Demand-Secondary | 4,153,830 | 2,462,311 |
| 78 | 108 | LA_DISCSRV | Labor - Distribution-Customer-Services | 751,541 | 690,509 |
| 1 | 109 | LA_DISCMTR | Labor - Distribution-Customer-Meters | 6,173,559 | 4,299,019 |

This schedule is sponsored by PNM Witness Larkin

**PUBLIC SERVICE OF NEW MEXICO**
**Test Period Ending September 30th, 2028**

| Class_Factors Line No. | Factor No. | | | Schedule 1B Residential | Schedule 2 Small Power |
|---|---|---|---|---|---|
| 41 | 71 | 5819_DISCBIL | Accts 581-589 - Distribution-Customer-Billing & Collections | - | - |
| 42 | 72 | 5819_DISCINF | Accts 581-589 - Distribution-Customer-Service & Info | - | - |
| 43 | 73 | 5819_DISCOTH | Accts 581-589 - Distribution-Customer-Other | 73 | 578 |
| 44 | 74 | 5918_PROD | Accts 591-598 - Production-Demand | - | - |
| 45 | 75 | 5918_PROEF | Accts 591-598 - Production-Energy-Fuel | - | - |
| 46 | 76 | 5918_PROENF | Accts 591-598 - Production-Energy-Non-Fuel | - | - |
| 47 | 77 | 5918_STO_PRO_D | Accts 591-598 - Storage-Production-Demand | - | - |
| 48 | 78 | 5918_STO_TRA_D | Accts 591-598 - Storage-Transmission-Demand | - | - |
| 49 | 79 | 5918_STO_DIS_DSUB | Accts 591-598 - Storage-Distribution-Demand-Subs | - | - |
| 50 | 80 | 5918_STO_DIS_DPRI | Accts 591-598 - Storage-Distribution-Demand-Primary | - | - |
| 51 | 81 | 5918_STO_DIS_DSEC | Accts 591-598 - Storage-Distribution-Demand-Secondary | - | - |
| 52 | 82 | 5918_TRAD | Accts 591-598 - Transmission-Demand | - | - |
| 53 | 83 | 5918_DISDSUB | Accts 591-598 - Distribution-Demand-Subs | 14,488 | 317,472 |
| 54 | 84 | 5918_DISDPRI | Accts 591-598 - Distribution-Demand-Primary | 58,303 | 1,277,545 |
| 55 | 85 | 5918_DISDSEC | Accts 591-598 - Distribution-Demand-Secondary | 26,819 | 587,673 |
| 56 | 86 | 5918_DISCSRV | Accts 591-598 - Distribution-Customer-Services | 41 | 184 |
| 57 | 87 | 5918_DISCMTR | Accts 591-598 - Distribution-Customer-Meters | 76,053 | 1,315,348 |
| 58 | 88 | 5918_DISCMTRR | Accts 591-598 - Distribution-Customer-Meter Reading | - | - |
| 59 | 89 | 5918_DISCBIL | Accts 591-598 - Distribution-Customer-Billing & Collections | - | - |
| 60 | 90 | 5918_DISCINF | Accts 591-598 - Distribution-Customer-Service & Info | - | - |
| 61 | 91 | 5918_DISCOTH | Accts 591-598 - Distribution-Customer-Other | 3 | 21 |
| 62 | 92 | CACT_DISCMTRR | Cust Accts - Distribution-Customer-Meter Reading | 129,237 | 878,829 |
| 63 | 93 | CACT_DISCBIL | Cust Accts - Distribution-Customer-Billing & Collections | 190,834 | 1,297,695 |
| 64 | 94 | CACT_DISCINF | Cust Accts - Distribution-Customer-Service & Info | - | - |
| 65 | 95 | CACT_DISCOTH | Cust Accts - Distribution-Customer-Other | 25,969 | 205,949 |
| 66 | 96 | LA_PROD | Labor - Production-Demand | 65,602 | 1,344,253 |
| 67 | 97 | LA_PROEF | Labor - Production-Energy-Fuel | - | - |
| 68 | 98 | LA_PROENF | Labor - Production-Energy-Non-Fuel | - | - |
| 69 | 99 | LA_STO_PRO_D | Labor - Storage-Production-Demand | - | - |
| 70 | 100 | LA_STO_TRA_D | Labor - Storage-Transmission-Demand | - | - |
| 71 | 101 | LA_STO_DIS_DSUB | Labor - Storage-Distribution-Demand-Subs | - | - |
| 72 | 102 | LA_STO_DIS_DPRI | Labor - Storage-Distribution-Demand-Primary | - | - |
| 73 | 103 | LA_STO_DIS_DSEC | Labor - Storage-Distribution-Demand-Secondary | - | - |
| 74 | 104 | LA_TRAD | Labor - Transmission-Demand | 16,219 | 330,720 |
| 75 | 105 | LA_DISDSUB | Labor - Distribution-Demand-Subs | 22,594 | 495,090 |
| 76 | 106 | LA_DISDPRI | Labor - Distribution-Demand-Primary | 59,264 | 1,298,619 |
| 77 | 107 | LA_DISDSEC | Labor - Distribution-Demand-Secondary | 27,262 | 597,367 |
| 78 | 108 | LA_DISCSRV | Labor - Distribution-Customer-Services | 11,133 | 49,431 |
| 1 | 109 | LA_DISCMTR | Labor - Distribution-Customer-Meters | 69,312 | 1,198,752 |

This schedule is sponsored by PNM Witness Larkin

**PUBLIC SERVICE OF NEW MEXICO**
**Test Period Ending September 30th, 2028**

| Class_Factors Line No. | Factor No. | | | Schedule 2B Small Power | Schedule 3B General Power |
|---|---|---|---|---|---|
| 41 | 71 | 5819_DISCBIL | Accts 581-589 - Distribution-Customer-Billing & Collections | - | - |
| 42 | 72 | 5819_DISCINF | Accts 581-589 - Distribution-Customer-Service & Info | - | - |
| 43 | 73 | 5819_DISCOTH | Accts 581-589 - Distribution-Customer-Other | 6 | 194 |
| 44 | 74 | 5918_PROD | Accts 591-598 - Production-Demand | - | - |
| 45 | 75 | 5918_PROEF | Accts 591-598 - Production-Energy-Fuel | - | - |
| 46 | 76 | 5918_PROENF | Accts 591-598 - Production-Energy-Non-Fuel | - | - |
| 47 | 77 | 5918_STO_PRO_D | Accts 591-598 - Storage-Production-Demand | - | - |
| 48 | 78 | 5918_STO_TRA_D | Accts 591-598 - Storage-Transmission-Demand | - | - |
| 49 | 79 | 5918_STO_DIS_DSUB | Accts 591-598 - Storage-Distribution-Demand-Subs | - | - |
| 50 | 80 | 5918_STO_DIS_DPRI | Accts 591-598 - Storage-Distribution-Demand-Primary | - | - |
| 51 | 81 | 5918_STO_DIS_DSEC | Accts 591-598 - Storage-Distribution-Demand-Secondary | - | - |
| 52 | 82 | 5918_TRAD | Accts 591-598 - Transmission-Demand | - | - |
| 53 | 83 | 5918_DISDSUB | Accts 591-598 - Distribution-Demand-Subs | 4,207 | 378,840 |
| 54 | 84 | 5918_DISDPRI | Accts 591-598 - Distribution-Demand-Primary | 16,930 | 1,524,499 |
| 55 | 85 | 5918_DISDSEC | Accts 591-598 - Distribution-Demand-Secondary | 7,788 | 701,272 |
| 56 | 86 | 5918_DISCSRV | Accts 591-598 - Distribution-Customer-Services | 2 | - |
| 57 | 87 | 5918_DISCMTR | Accts 591-598 - Distribution-Customer-Meters | 12,461 | 297,741 |
| 58 | 88 | 5918_DISCMTRR | Accts 591-598 - Distribution-Customer-Meter Reading | - | - |
| 59 | 89 | 5918_DISCBIL | Accts 591-598 - Distribution-Customer-Billing & Collections | - | - |
| 60 | 90 | 5918_DISCINF | Accts 591-598 - Distribution-Customer-Service & Info | - | - |
| 61 | 91 | 5918_DISCOTH | Accts 591-598 - Distribution-Customer-Other | 0 | 7 |
| 62 | 92 | CACT_DISCMTRR | Cust Accts - Distribution-Customer-Meter Reading | 8,325 | 44,955 |
| 63 | 93 | CACT_DISCBIL | Cust Accts - Distribution-Customer-Billing & Collections | 12,293 | 66,381 |
| 64 | 94 | CACT_DISCINF | Cust Accts - Distribution-Customer-Service & Info | - | - |
| 65 | 95 | CACT_DISCOTH | Cust Accts - Distribution-Customer-Other | 2,131 | 69,199 |
| 66 | 96 | LA_PROD | Labor - Production-Demand | 17,637 | 1,983,091 |
| 67 | 97 | LA_PROEF | Labor - Production-Energy-Fuel | - | - |
| 68 | 98 | LA_PROENF | Labor - Production-Energy-Non-Fuel | - | - |
| 69 | 99 | LA_STO_PRO_D | Labor - Storage-Production-Demand | - | - |
| 70 | 100 | LA_STO_TRA_D | Labor - Storage-Transmission-Demand | - | - |
| 71 | 101 | LA_STO_DIS_DSUB | Labor - Storage-Distribution-Demand-Subs | - | - |
| 72 | 102 | LA_STO_DIS_DPRI | Labor - Storage-Distribution-Demand-Primary | - | - |
| 73 | 103 | LA_STO_DIS_DSEC | Labor - Storage-Distribution-Demand-Secondary | - | - |
| 74 | 104 | LA_TRAD | Labor - Transmission-Demand | 3,518 | 494,511 |
| 75 | 105 | LA_DISDSUB | Labor - Distribution-Demand-Subs | 6,561 | 590,792 |
| 76 | 106 | LA_DISDPRI | Labor - Distribution-Demand-Primary | 17,209 | 1,549,646 |
| 77 | 107 | LA_DISDSEC | Labor - Distribution-Demand-Secondary | 7,916 | 712,840 |
| 78 | 108 | LA_DISCSRV | Labor - Distribution-Customer-Services | 468 | - |
| 1 | 109 | LA_DISCMTR | Labor - Distribution-Customer-Meters | 11,356 | 271,349 |

This schedule is sponsored by PNM Witness Larkin

**PUBLIC SERVICE OF NEW MEXICO**
**Test Period Ending September 30th, 2028**

| Class_Factors Line No. | Factor No. | | | Schedule 3C GP Low LF | Schedule 3D General Power Gov |
|---|---|---|---|---|---|
| 41 | 71 | 5819_DISCBIL | Accts 581-589 - Distribution-Customer-Billing & Collections | - | - |
| 42 | 72 | 5819_DISCINF | Accts 581-589 - Distribution-Customer-Service & Info | - | - |
| 43 | 73 | 5819_DISCOTH | Accts 581-589 - Distribution-Customer-Other | 54 | 14 |
| 44 | 74 | 5918_PROD | Accts 591-598 - Production-Demand | - | - |
| 45 | 75 | 5918_PROEF | Accts 591-598 - Production-Energy-Fuel | - | - |
| 46 | 76 | 5918_PROENF | Accts 591-598 - Production-Energy-Non-Fuel | - | - |
| 47 | 77 | 5918_STO_PRO_D | Accts 591-598 - Storage-Production-Demand | - | - |
| 48 | 78 | 5918_STO_TRA_D | Accts 591-598 - Storage-Transmission-Demand | - | - |
| 49 | 79 | 5918_STO_DIS_DSUB | Accts 591-598 - Storage-Distribution-Demand-Subs | - | - |
| 50 | 80 | 5918_STO_DIS_DPRI | Accts 591-598 - Storage-Distribution-Demand-Primary | - | - |
| 51 | 81 | 5918_STO_DIS_DSEC | Accts 591-598 - Storage-Distribution-Demand-Secondary | - | - |
| 52 | 82 | 5918_TRAD | Accts 591-598 - Transmission-Demand | - | - |
| 53 | 83 | 5918_DISDSUB | Accts 591-598 - Distribution-Demand-Subs | 118,890 | 27,150 |
| 54 | 84 | 5918_DISDPRI | Accts 591-598 - Distribution-Demand-Primary | 478,426 | 109,255 |
| 55 | 85 | 5918_DISDSEC | Accts 591-598 - Distribution-Demand-Secondary | 220,077 | 50,258 |
| 56 | 86 | 5918_DISCSRV | Accts 591-598 - Distribution-Customer-Services | - | - |
| 57 | 87 | 5918_DISCMTR | Accts 591-598 - Distribution-Customer-Meters | 134,568 | 17,698 |
| 58 | 88 | 5918_DISCMTRR | Accts 591-598 - Distribution-Customer-Meter Reading | - | - |
| 59 | 89 | 5918_DISCBIL | Accts 591-598 - Distribution-Customer-Billing & Collections | - | - |
| 60 | 90 | 5918_DISCINF | Accts 591-598 - Distribution-Customer-Service & Info | - | - |
| 61 | 91 | 5918_DISCOTH | Accts 591-598 - Distribution-Customer-Other | 2 | 1 |
| 62 | 92 | CACT_DISCMTRR | Cust Accts - Distribution-Customer-Meter Reading | 20,318 | 2,672 |
| 63 | 93 | CACT_DISCBIL | Cust Accts - Distribution-Customer-Billing & Collections | 30,002 | 3,946 |
| 64 | 94 | CACT_DISCINF | Cust Accts - Distribution-Customer-Service & Info | - | - |
| 65 | 95 | CACT_DISCOTH | Cust Accts - Distribution-Customer-Other | 19,097 | 5,136 |
| 66 | 96 | LA_PROD | Labor - Production-Demand | 456,548 | 138,281 |
| 67 | 97 | LA_PROEF | Labor - Production-Energy-Fuel | - | - |
| 68 | 98 | LA_PROENF | Labor - Production-Energy-Non-Fuel | - | - |
| 69 | 99 | LA_STO_PRO_D | Labor - Storage-Production-Demand | - | - |
| 70 | 100 | LA_STO_TRA_D | Labor - Storage-Transmission-Demand | - | - |
| 71 | 101 | LA_STO_DIS_DSUB | Labor - Storage-Distribution-Demand-Subs | - | - |
| 72 | 102 | LA_STO_DIS_DPRI | Labor - Storage-Distribution-Demand-Primary | - | - |
| 73 | 103 | LA_STO_DIS_DSEC | Labor - Storage-Distribution-Demand-Secondary | - | - |
| 74 | 104 | LA_TRAD | Labor - Transmission-Demand | 105,982 | 35,435 |
| 75 | 105 | LA_DISDSUB | Labor - Distribution-Demand-Subs | 185,406 | 42,340 |
| 76 | 106 | LA_DISDPRI | Labor - Distribution-Demand-Primary | 486,318 | 111,058 |
| 77 | 107 | LA_DISDSEC | Labor - Distribution-Demand-Secondary | 223,707 | 51,087 |
| 78 | 108 | LA_DISCSRV | Labor - Distribution-Customer-Services | - | - |
| 1 | 109 | LA_DISCMTR | Labor - Distribution-Customer-Meters | 122,639 | 16,129 |

This schedule is sponsored by PNM Witness Larkin

**PUBLIC SERVICE OF NEW MEXICO**
**Test Period Ending September 30th, 2028**

| Class_Factors Line No. | Factor No. | | | Schedule 3E GP Low LF Gov |
|---|---|---|---|---|
| 41 | 71 | 5819_DISCBIL | Accts 581-589 - Distribution-Customer-Billing & Collections | - |
| 42 | 72 | 5819_DISCINF | Accts 581-589 - Distribution-Customer-Service & Info | - |
| 43 | 73 | 5819_DISCOTH | Accts 581-589 - Distribution-Customer-Other | 3 |
| 44 | 74 | 5918_PROD | Accts 591-598 - Production-Demand | - |
| 45 | 75 | 5918_PROEF | Accts 591-598 - Production-Energy-Fuel | - |
| 46 | 76 | 5918_PROENF | Accts 591-598 - Production-Energy-Non-Fuel | - |
| 47 | 77 | 5918_STO_PRO_D | Accts 591-598 - Storage-Production-Demand | - |
| 48 | 78 | 5918_STO_TRA_D | Accts 591-598 - Storage-Transmission-Demand | - |
| 49 | 79 | 5918_STO_DIS_DSUB | Accts 591-598 - Storage-Distribution-Demand-Subs | - |
| 50 | 80 | 5918_STO_DIS_DPRI | Accts 591-598 - Storage-Distribution-Demand-Primary | - |
| 51 | 81 | 5918_STO_DIS_DSEC | Accts 591-598 - Storage-Distribution-Demand-Secondary | - |
| 52 | 82 | 5918_TRAD | Accts 591-598 - Transmission-Demand | - |
| 53 | 83 | 5918_DISDSUB | Accts 591-598 - Distribution-Demand-Subs | 7,681 |
| 54 | 84 | 5918_DISDPRI | Accts 591-598 - Distribution-Demand-Primary | 30,908 |
| 55 | 85 | 5918_DISDSEC | Accts 591-598 - Distribution-Demand-Secondary | 14,218 |
| 56 | 86 | 5918_DISCSRV | Accts 591-598 - Distribution-Customer-Services | - |
| 57 | 87 | 5918_DISCMTR | Accts 591-598 - Distribution-Customer-Meters | 7,698 |
| 58 | 88 | 5918_DISCMTRR | Accts 591-598 - Distribution-Customer-Meter Reading | - |
| 59 | 89 | 5918_DISCBIL | Accts 591-598 - Distribution-Customer-Billing & Collections | - |
| 60 | 90 | 5918_DISCINF | Accts 591-598 - Distribution-Customer-Service & Info | - |
| 61 | 91 | 5918_DISCOTH | Accts 591-598 - Distribution-Customer-Other | 0 |
| 62 | 92 | CACT_DISCMTRR | Cust Accts - Distribution-Customer-Meter Reading | 1,162 |
| 63 | 93 | CACT_DISCBIL | Cust Accts - Distribution-Customer-Billing & Collections | 1,716 |
| 64 | 94 | CACT_DISCINF | Cust Accts - Distribution-Customer-Service & Info | - |
| 65 | 95 | CACT_DISCOTH | Cust Accts - Distribution-Customer-Other | 1,194 |
| 66 | 96 | LA_PROD | Labor - Production-Demand | 29,206 |
| 67 | 97 | LA_PROEF | Labor - Production-Energy-Fuel | - |
| 68 | 98 | LA_PROENF | Labor - Production-Energy-Non-Fuel | - |
| 69 | 99 | LA_STO_PRO_D | Labor - Storage-Production-Demand | - |
| 70 | 100 | LA_STO_TRA_D | Labor - Storage-Transmission-Demand | - |
| 71 | 101 | LA_STO_DIS_DSUB | Labor - Storage-Distribution-Demand-Subs | - |
| 72 | 102 | LA_STO_DIS_DPRI | Labor - Storage-Distribution-Demand-Primary | - |
| 73 | 103 | LA_STO_DIS_DSEC | Labor - Storage-Distribution-Demand-Secondary | - |
| 74 | 104 | LA_TRAD | Labor - Transmission-Demand | 7,287 |
| 75 | 105 | LA_DISDSUB | Labor - Distribution-Demand-Subs | 11,978 |
| 76 | 106 | LA_DISDPRI | Labor - Distribution-Demand-Primary | 31,417 |
| 77 | 107 | LA_DISDSEC | Labor - Distribution-Demand-Secondary | 14,452 |
| 78 | 108 | LA_DISCSRV | Labor - Distribution-Customer-Services | - |
| 1 | 109 | LA_DISCMTR | Labor - Distribution-Customer-Meters | 7,015 |

This schedule is sponsored by PNM Witness Larkin

**PUBLIC SERVICE OF NEW MEXICO**
**Test Period Ending September 30th, 2028**

| Class_Factors Line No. | Factor No. | | | Schedule 3F GP Charging Stations | Schedule 4 Large Power |
|---|---|---|---|---|---|
| 41 | 71 | 5819_DISCBIL | Accts 581-589 - Distribution-Customer-Billing & Collections | - | - |
| 42 | 72 | 5819_DISCINF | Accts 581-589 - Distribution-Customer-Service & Info | - | - |
| 43 | 73 | 5819_DISCOTH | Accts 581-589 - Distribution-Customer-Other | 1 | 121 |
| 44 | 74 | 5918_PROD | Accts 591-598 - Production-Demand | - | - |
| 45 | 75 | 5918_PROEF | Accts 591-598 - Production-Energy-Fuel | - | - |
| 46 | 76 | 5918_PROENF | Accts 591-598 - Production-Energy-Non-Fuel | - | - |
| 47 | 77 | 5918_STO_PRO_D | Accts 591-598 - Storage-Production-Demand | - | - |
| 48 | 78 | 5918_STO_TRA_D | Accts 591-598 - Storage-Transmission-Demand | - | - |
| 49 | 79 | 5918_STO_DIS_DSUB | Accts 591-598 - Storage-Distribution-Demand-Subs | - | - |
| 50 | 80 | 5918_STO_DIS_DPRI | Accts 591-598 - Storage-Distribution-Demand-Primary | - | - |
| 51 | 81 | 5918_STO_DIS_DSEC | Accts 591-598 - Storage-Distribution-Demand-Secondary | - | - |
| 52 | 82 | 5918_TRAD | Accts 591-598 - Transmission-Demand | - | - |
| 53 | 83 | 5918_DISDSUB | Accts 591-598 - Distribution-Demand-Subs | 5,109 | 197,112 |
| 54 | 84 | 5918_DISDPRI | Accts 591-598 - Distribution-Demand-Primary | 20,561 | 793,205 |
| 55 | 85 | 5918_DISDSEC | Accts 591-598 - Distribution-Demand-Secondary | 9,458 | - |
| 56 | 86 | 5918_DISCSRV | Accts 591-598 - Distribution-Customer-Services | - | - |
| 57 | 87 | 5918_DISCMTR | Accts 591-598 - Distribution-Customer-Meters | 2,377 | 86,913 |
| 58 | 88 | 5918_DISCMTRR | Accts 591-598 - Distribution-Customer-Meter Reading | - | - |
| 59 | 89 | 5918_DISCBIL | Accts 591-598 - Distribution-Customer-Billing & Collections | - | - |
| 60 | 90 | 5918_DISCINF | Accts 591-598 - Distribution-Customer-Service & Info | - | - |
| 61 | 91 | 5918_DISCOTH | Accts 591-598 - Distribution-Customer-Other | 0 | 4 |
| 62 | 92 | CACT_DISCMTRR | Cust Accts - Distribution-Customer-Meter Reading | 359 | 2,533 |
| 63 | 93 | CACT_DISCBIL | Cust Accts - Distribution-Customer-Billing & Collections | 530 | 3,741 |
| 64 | 94 | CACT_DISCINF | Cust Accts - Distribution-Customer-Service & Info | - | - |
| 65 | 95 | CACT_DISCOTH | Cust Accts - Distribution-Customer-Other | 491 | 42,975 |
| 66 | 96 | LA_PROD | Labor - Production-Demand | 11,404 | 1,170,269 |
| 67 | 97 | LA_PROEF | Labor - Production-Energy-Fuel | - | - |
| 68 | 98 | LA_PROENF | Labor - Production-Energy-Non-Fuel | - | - |
| 69 | 99 | LA_STO_PRO_D | Labor - Storage-Production-Demand | - | - |
| 70 | 100 | LA_STO_TRA_D | Labor - Storage-Transmission-Demand | - | - |
| 71 | 101 | LA_STO_DIS_DSUB | Labor - Storage-Distribution-Demand-Subs | - | - |
| 72 | 102 | LA_STO_DIS_DPRI | Labor - Storage-Distribution-Demand-Primary | - | - |
| 73 | 103 | LA_STO_DIS_DSEC | Labor - Storage-Distribution-Demand-Secondary | - | - |
| 74 | 104 | LA_TRAD | Labor - Transmission-Demand | 2,666 | 289,154 |
| 75 | 105 | LA_DISDSUB | Labor - Distribution-Demand-Subs | 7,968 | 307,393 |
| 76 | 106 | LA_DISDPRI | Labor - Distribution-Demand-Primary | 20,900 | 806,289 |
| 77 | 107 | LA_DISDSEC | Labor - Distribution-Demand-Secondary | 9,614 | - |
| 78 | 108 | LA_DISCSRV | Labor - Distribution-Customer-Services | - | - |
| 1 | 109 | LA_DISCMTR | Labor - Distribution-Customer-Meters | 2,167 | 79,208 |

This schedule is sponsored by PNM Witness Larkin

**PUBLIC SERVICE OF NEW MEXICO**
**Test Period Ending September 30th, 2028**

| Line No. | Class_Factors Factor No. | | | Schedule 5 Industrial Power | Schedule 10 Irrigation |
|---|---|---|---|---|---|
| 41 | 71 | 5819_DISCBIL | Accts 581-589 - Distribution-Customer-Billing & Collections | - | - |
| 42 | 72 | 5819_DISCINF | Accts 581-589 - Distribution-Customer-Service & Info | - | - |
| 43 | 73 | 5819_DISCOTH | Accts 581-589 - Distribution-Customer-Other | - | 6 |
| 44 | 74 | 5918_PROD | Accts 591-598 - Production-Demand | - | - |
| 45 | 75 | 5918_PROEF | Accts 591-598 - Production-Energy-Fuel | - | - |
| 46 | 76 | 5918_PROENF | Accts 591-598 - Production-Energy-Non-Fuel | - | - |
| 47 | 77 | 5918_STO_PRO_D | Accts 591-598 - Storage-Production-Demand | - | - |
| 48 | 78 | 5918_STO_TRA_D | Accts 591-598 - Storage-Transmission-Demand | - | - |
| 49 | 79 | 5918_STO_DIS_DSUB | Accts 591-598 - Storage-Distribution-Demand-Subs | - | - |
| 50 | 80 | 5918_STO_DIS_DPRI | Accts 591-598 - Storage-Distribution-Demand-Primary | - | - |
| 51 | 81 | 5918_STO_DIS_DSEC | Accts 591-598 - Storage-Distribution-Demand-Secondary | - | - |
| 52 | 82 | 5918_TRAD | Accts 591-598 - Transmission-Demand | - | - |
| 53 | 83 | 5918_DISDSUB | Accts 591-598 - Distribution-Demand-Subs | - | 7,847 |
| 54 | 84 | 5918_DISDPRI | Accts 591-598 - Distribution-Demand-Primary | - | 31,576 |
| 55 | 85 | 5918_DISDSEC | Accts 591-598 - Distribution-Demand-Secondary | - | 14,525 |
| 56 | 86 | 5918_DISCSRV | Accts 591-598 - Distribution-Customer-Services | - | - |
| 57 | 87 | 5918_DISCMTR | Accts 591-598 - Distribution-Customer-Meters | - | 33,347 |
| 58 | 88 | 5918_DISCMTRR | Accts 591-598 - Distribution-Customer-Meter Reading | - | - |
| 59 | 89 | 5918_DISCBIL | Accts 591-598 - Distribution-Customer-Billing & Collections | - | - |
| 60 | 90 | 5918_DISCINF | Accts 591-598 - Distribution-Customer-Service & Info | - | - |
| 61 | 91 | 5918_DISCOTH | Accts 591-598 - Distribution-Customer-Other | - | 0 |
| 62 | 92 | CACT_DISCMTRR | Cust Accts - Distribution-Customer-Meter Reading | - | 5,035 |
| 63 | 93 | CACT_DISCBIL | Cust Accts - Distribution-Customer-Billing & Collections | - | 7,435 |
| 64 | 94 | CACT_DISCINF | Cust Accts - Distribution-Customer-Service & Info | - | - |
| 65 | 95 | CACT_DISCOTH | Cust Accts - Distribution-Customer-Other | - | 1,996 |
| 66 | 96 | LA_PROD | Labor - Production-Demand | - | 30,990 |
| 67 | 97 | LA_PROEF | Labor - Production-Energy-Fuel | - | - |
| 68 | 98 | LA_PROENF | Labor - Production-Energy-Non-Fuel | - | - |
| 69 | 99 | LA_STO_PRO_D | Labor - Storage-Production-Demand | - | - |
| 70 | 100 | LA_STO_TRA_D | Labor - Storage-Transmission-Demand | - | - |
| 71 | 101 | LA_STO_DIS_DSUB | Labor - Storage-Distribution-Demand-Subs | - | - |
| 72 | 102 | LA_STO_DIS_DPRI | Labor - Storage-Distribution-Demand-Primary | - | - |
| 73 | 103 | LA_STO_DIS_DSEC | Labor - Storage-Distribution-Demand-Secondary | - | - |
| 74 | 104 | LA_TRAD | Labor - Transmission-Demand | - | 6,892 |
| 75 | 105 | LA_DISDSUB | Labor - Distribution-Demand-Subs | - | 12,237 |
| 76 | 106 | LA_DISDPRI | Labor - Distribution-Demand-Primary | - | 32,097 |
| 77 | 107 | LA_DISDSEC | Labor - Distribution-Demand-Secondary | - | 14,765 |
| 78 | 108 | LA_DISCSRV | Labor - Distribution-Customer-Services | - | - |
| 1 | 109 | LA_DISCMTR | Labor - Distribution-Customer-Meters | - | 30,391 |

This schedule is sponsored by PNM Witness Larkin

**PUBLIC SERVICE OF NEW MEXICO**
**Test Period Ending September 30th, 2028**

| Class_Factors Line No. | Factor No. | | | Schedule 11 Water & Sewage | Schedule 15 Industrial Power |
|---|---|---|---|---|---|
| 41 | 71 | 5819_DISCBIL | Accts 581-589 - Distribution-Customer-Billing & Collections | - | - |
| 42 | 72 | 5819_DISCINF | Accts 581-589 - Distribution-Customer-Service & Info | - | - |
| 43 | 73 | 5819_DISCOTH | Accts 581-589 - Distribution-Customer-Other | 21 | 8.76 |
| 44 | 74 | 5918_PROD | Accts 591-598 - Production-Demand | - | - |
| 45 | 75 | 5918_PROEF | Accts 591-598 - Production-Energy-Fuel | - | - |
| 46 | 76 | 5918_PROENF | Accts 591-598 - Production-Energy-Non-Fuel | - | - |
| 47 | 77 | 5918_STO_PRO_D | Accts 591-598 - Storage-Production-Demand | - | - |
| 48 | 78 | 5918_STO_TRA_D | Accts 591-598 - Storage-Transmission-Demand | - | - |
| 49 | 79 | 5918_STO_DIS_DSUB | Accts 591-598 - Storage-Distribution-Demand-Subs | - | - |
| 50 | 80 | 5918_STO_DIS_DPRI | Accts 591-598 - Storage-Distribution-Demand-Primary | - | - |
| 51 | 81 | 5918_STO_DIS_DSEC | Accts 591-598 - Storage-Distribution-Demand-Secondary | - | - |
| 52 | 82 | 5918_TRAD | Accts 591-598 - Transmission-Demand | - | - |
| 53 | 83 | 5918_DISDSUB | Accts 591-598 - Distribution-Demand-Subs | 50,373 | - |
| 54 | 84 | 5918_DISDPRI | Accts 591-598 - Distribution-Demand-Primary | 202,706 | - |
| 55 | 85 | 5918_DISDSEC | Accts 591-598 - Distribution-Demand-Secondary | - | - |
| 56 | 86 | 5918_DISCSRV | Accts 591-598 - Distribution-Customer-Services | - | - |
| 57 | 87 | 5918_DISCMTR | Accts 591-598 - Distribution-Customer-Meters | 62,809 | 547.36 |
| 58 | 88 | 5918_DISCMTRR | Accts 591-598 - Distribution-Customer-Meter Reading | - | - |
| 59 | 89 | 5918_DISCBIL | Accts 591-598 - Distribution-Customer-Billing & Collections | - | - |
| 60 | 90 | 5918_DISCINF | Accts 591-598 - Distribution-Customer-Service & Info | - | - |
| 61 | 91 | 5918_DISCOTH | Accts 591-598 - Distribution-Customer-Other | 1 | 0.32 |
| 62 | 92 | CACT_DISCMTRR | Cust Accts - Distribution-Customer-Meter Reading | 1,831 | 15.95 |
| 63 | 93 | CACT_DISCBIL | Cust Accts - Distribution-Customer-Billing & Collections | 2,703 | 23.56 |
| 64 | 94 | CACT_DISCINF | Cust Accts - Distribution-Customer-Service & Info | - | - |
| 65 | 95 | CACT_DISCOTH | Cust Accts - Distribution-Customer-Other | 7,453 | 3,121.47 |
| 66 | 96 | LA_PROD | Labor - Production-Demand | 90,221 | 69,244.01 |
| 67 | 97 | LA_PROEF | Labor - Production-Energy-Fuel | - | - |
| 68 | 98 | LA_PROENF | Labor - Production-Energy-Non-Fuel | - | - |
| 69 | 99 | LA_STO_PRO_D | Labor - Storage-Production-Demand | - | - |
| 70 | 100 | LA_STO_TRA_D | Labor - Storage-Transmission-Demand | - | - |
| 71 | 101 | LA_STO_DIS_DSUB | Labor - Storage-Distribution-Demand-Subs | - | - |
| 72 | 102 | LA_STO_DIS_DPRI | Labor - Storage-Distribution-Demand-Primary | - | - |
| 73 | 103 | LA_STO_DIS_DSEC | Labor - Storage-Distribution-Demand-Secondary | - | - |
| 74 | 104 | LA_TRAD | Labor - Transmission-Demand | 27,040 | 17,339.44 |
| 75 | 105 | LA_DISDSUB | Labor - Distribution-Demand-Subs | 78,555 | - |
| 76 | 106 | LA_DISDPRI | Labor - Distribution-Demand-Primary | 206,050 | - |
| 77 | 107 | LA_DISDSEC | Labor - Distribution-Demand-Secondary | - | - |
| 78 | 108 | LA_DISCSRV | Labor - Distribution-Customer-Services | - | - |
| 1 | 109 | LA_DISCMTR | Labor - Distribution-Customer-Meters | 57,242 | 498.84 |

This schedule is sponsored by PNM Witness Larkin

**PUBLIC SERVICE OF NEW MEXICO**
**Test Period Ending September 30th, 2028**

| Class_Factors Line No. | Factor No. | | | Schedule 30 Industrial Power | Schedule 33B Large Service |
|---|---|---|---|---|---|
| 41 | 71 | 5819_DISCBIL | Accts 581-589 - Distribution-Customer-Billing & Collections | - | - |
| 42 | 72 | 5819_DISCINF | Accts 581-589 - Distribution-Customer-Service & Info | - | - |
| 43 | 73 | 5819_DISCOTH | Accts 581-589 - Distribution-Customer-Other | 87 | 2 |
| 44 | 74 | 5918_PROD | Accts 591-598 - Production-Demand | - | - |
| 45 | 75 | 5918_PROEF | Accts 591-598 - Production-Energy-Fuel | - | - |
| 46 | 76 | 5918_PROENF | Accts 591-598 - Production-Energy-Non-Fuel | - | - |
| 47 | 77 | 5918_STO_PRO_D | Accts 591-598 - Storage-Production-Demand | - | - |
| 48 | 78 | 5918_STO_TRA_D | Accts 591-598 - Storage-Transmission-Demand | - | - |
| 49 | 79 | 5918_STO_DIS_DSUB | Accts 591-598 - Storage-Distribution-Demand-Subs | - | - |
| 50 | 80 | 5918_STO_DIS_DPRI | Accts 591-598 - Storage-Distribution-Demand-Primary | - | - |
| 51 | 81 | 5918_STO_DIS_DSEC | Accts 591-598 - Storage-Distribution-Demand-Secondary | - | - |
| 52 | 82 | 5918_TRAD | Accts 591-598 - Transmission-Demand | - | - |
| 53 | 83 | 5918_DISDSUB | Accts 591-598 - Distribution-Demand-Subs | 104,782 | - |
| 54 | 84 | 5918_DISDPRI | Accts 591-598 - Distribution-Demand-Primary | - | - |
| 55 | 85 | 5918_DISDSEC | Accts 591-598 - Distribution-Demand-Secondary | - | - |
| 56 | 86 | 5918_DISCSRV | Accts 591-598 - Distribution-Customer-Services | - | - |
| 57 | 87 | 5918_DISCMTR | Accts 591-598 - Distribution-Customer-Meters | 547 | 5,474 |
| 58 | 88 | 5918_DISCMTRR | Accts 591-598 - Distribution-Customer-Meter Reading | - | - |
| 59 | 89 | 5918_DISCBIL | Accts 591-598 - Distribution-Customer-Billing & Collections | - | - |
| 60 | 90 | 5918_DISCINF | Accts 591-598 - Distribution-Customer-Service & Info | - | - |
| 61 | 91 | 5918_DISCOTH | Accts 591-598 - Distribution-Customer-Other | 3 | 0 |
| 62 | 92 | CACT_DISCMTRR | Cust Accts - Distribution-Customer-Meter Reading | 16 | 160 |
| 63 | 93 | CACT_DISCBIL | Cust Accts - Distribution-Customer-Billing & Collections | 24 | 236 |
| 64 | 94 | CACT_DISCINF | Cust Accts - Distribution-Customer-Service & Info | - | - |
| 65 | 95 | CACT_DISCOTH | Cust Accts - Distribution-Customer-Other | 31,007 | 605 |
| 66 | 96 | LA_PROD | Labor - Production-Demand | 713,737 | 8,850 |
| 67 | 97 | LA_PROEF | Labor - Production-Energy-Fuel | - | - |
| 68 | 98 | LA_PROENF | Labor - Production-Energy-Non-Fuel | - | - |
| 69 | 99 | LA_STO_PRO_D | Labor - Storage-Production-Demand | - | - |
| 70 | 100 | LA_STO_TRA_D | Labor - Storage-Transmission-Demand | - | - |
| 71 | 101 | LA_STO_DIS_DSUB | Labor - Storage-Distribution-Demand-Subs | - | - |
| 72 | 102 | LA_STO_DIS_DPRI | Labor - Storage-Distribution-Demand-Primary | - | - |
| 73 | 103 | LA_STO_DIS_DSEC | Labor - Storage-Distribution-Demand-Secondary | - | - |
| 74 | 104 | LA_TRAD | Labor - Transmission-Demand | 178,197 | 2,590 |
| 75 | 105 | LA_DISDSUB | Labor - Distribution-Demand-Subs | 163,405 | - |
| 76 | 106 | LA_DISDPRI | Labor - Distribution-Demand-Primary | - | - |
| 77 | 107 | LA_DISDSEC | Labor - Distribution-Demand-Secondary | - | - |
| 78 | 108 | LA_DISCSRV | Labor - Distribution-Customer-Services | - | - |
| 1 | 109 | LA_DISCMTR | Labor - Distribution-Customer-Meters | 499 | 4,988 |

This schedule is sponsored by PNM Witness Larkin

**PUBLIC SERVICE OF NEW MEXICO**
**Test Period Ending September 30th, 2028**

| Line No. | Class_Factors Factor No. | | | Schedule 35B Lg Power Service | Schedule 36B Special Service Rate |
|---|---|---|---|---|---|
| 41 | 71 | 5819_DISCBIL | Accts 581-589 - Distribution-Customer-Billing & Collections | - | - |
| 42 | 72 | 5819_DISCINF | Accts 581-589 - Distribution-Customer-Service & Info | - | - |
| 43 | 73 | 5819_DISCOTH | Accts 581-589 - Distribution-Customer-Other | 36 | 177 |
| 44 | 74 | 5918_PROD | Accts 591-598 - Production-Demand | - | - |
| 45 | 75 | 5918_PROEF | Accts 591-598 - Production-Energy-Fuel | - | - |
| 46 | 76 | 5918_PROENF | Accts 591-598 - Production-Energy-Non-Fuel | - | - |
| 47 | 77 | 5918_STO_PRO_D | Accts 591-598 - Storage-Production-Demand | - | - |
| 48 | 78 | 5918_STO_TRA_D | Accts 591-598 - Storage-Transmission-Demand | - | - |
| 49 | 79 | 5918_STO_DIS_DSUB | Accts 591-598 - Storage-Distribution-Demand-Subs | - | - |
| 50 | 80 | 5918_STO_DIS_DPRI | Accts 591-598 - Storage-Distribution-Demand-Primary | - | - |
| 51 | 81 | 5918_STO_DIS_DSEC | Accts 591-598 - Storage-Distribution-Demand-Secondary | - | - |
| 52 | 82 | 5918_TRAD | Accts 591-598 - Transmission-Demand | - | - |
| 53 | 83 | 5918_DISDSUB | Accts 591-598 - Distribution-Demand-Subs | 48,664 | - |
| 54 | 84 | 5918_DISDPRI | Accts 591-598 - Distribution-Demand-Primary | - | - |
| 55 | 85 | 5918_DISDSEC | Accts 591-598 - Distribution-Demand-Secondary | - | - |
| 56 | 86 | 5918_DISCSRV | Accts 591-598 - Distribution-Customer-Services | - | - |
| 57 | 87 | 5918_DISCMTR | Accts 591-598 - Distribution-Customer-Meters | 2,737 | 547 |
| 58 | 88 | 5918_DISCMTRR | Accts 591-598 - Distribution-Customer-Meter Reading | - | - |
| 59 | 89 | 5918_DISCBIL | Accts 591-598 - Distribution-Customer-Billing & Collections | - | - |
| 60 | 90 | 5918_DISCINF | Accts 591-598 - Distribution-Customer-Service & Info | - | - |
| 61 | 91 | 5918_DISCOTH | Accts 591-598 - Distribution-Customer-Other | 1 | 6 |
| 62 | 92 | CACT_DISCMTRR | Cust Accts - Distribution-Customer-Meter Reading | 80 | 16 |
| 63 | 93 | CACT_DISCBIL | Cust Accts - Distribution-Customer-Billing & Collections | 118 | 24 |
| 64 | 94 | CACT_DISCINF | Cust Accts - Distribution-Customer-Service & Info | - | - |
| 65 | 95 | CACT_DISCOTH | Cust Accts - Distribution-Customer-Other | 12,959 | 62,890 |
| 66 | 96 | LA_PROD | Labor - Production-Demand | 300,345 | - |
| 67 | 97 | LA_PROEF | Labor - Production-Energy-Fuel | - | - |
| 68 | 98 | LA_PROENF | Labor - Production-Energy-Non-Fuel | - | - |
| 69 | 99 | LA_STO_PRO_D | Labor - Storage-Production-Demand | - | - |
| 70 | 100 | LA_STO_TRA_D | Labor - Storage-Transmission-Demand | - | - |
| 71 | 101 | LA_STO_DIS_DSUB | Labor - Storage-Distribution-Demand-Subs | - | - |
| 72 | 102 | LA_STO_DIS_DPRI | Labor - Storage-Distribution-Demand-Primary | - | - |
| 73 | 103 | LA_STO_DIS_DSEC | Labor - Storage-Distribution-Demand-Secondary | - | - |
| 74 | 104 | LA_TRAD | Labor - Transmission-Demand | 74,235 | 921,650 |
| 75 | 105 | LA_DISDSUB | Labor - Distribution-Demand-Subs | 75,890 | - |
| 76 | 106 | LA_DISDPRI | Labor - Distribution-Demand-Primary | - | - |
| 77 | 107 | LA_DISDSEC | Labor - Distribution-Demand-Secondary | - | - |
| 78 | 108 | LA_DISCSRV | Labor - Distribution-Customer-Services | - | - |
| 1 | 109 | LA_DISCMTR | Labor - Distribution-Customer-Meters | 2,494 | 499 |

This schedule is sponsored by PNM Witness Larkin

**PUBLIC SERVICE OF NEW MEXICO**
**Test Period Ending September 30th, 2028**

| Line No. | Class_Factors Factor No. | | | Schedule 6 Priv. Area Light | Schedule 20 Streetlighting |
|---|---|---|---|---|---|
| 41 | 71 | 5819_DISCBIL | Accts 581-589 - Distribution-Customer-Billing & Collections | - | - |
| 42 | 72 | 5819_DISCINF | Accts 581-589 - Distribution-Customer-Service & Info | - | - |
| 43 | 73 | 5819_DISCOTH | Accts 581-589 - Distribution-Customer-Other | 80 | 5,736 |
| 44 | 74 | 5918_PROD | Accts 591-598 - Production-Demand | - | - |
| 45 | 75 | 5918_PROEF | Accts 591-598 - Production-Energy-Fuel | - | - |
| 46 | 76 | 5918_PROENF | Accts 591-598 - Production-Energy-Non-Fuel | - | - |
| 47 | 77 | 5918_STO_PRO_D | Accts 591-598 - Storage-Production-Demand | - | - |
| 48 | 78 | 5918_STO_TRA_D | Accts 591-598 - Storage-Transmission-Demand | - | - |
| 49 | 79 | 5918_STO_DIS_DSUB | Accts 591-598 - Storage-Distribution-Demand-Subs | - | - |
| 50 | 80 | 5918_STO_DIS_DPRI | Accts 591-598 - Storage-Distribution-Demand-Primary | - | - |
| 51 | 81 | 5918_STO_DIS_DSEC | Accts 591-598 - Storage-Distribution-Demand-Secondary | - | - |
| 52 | 82 | 5918_TRAD | Accts 591-598 - Transmission-Demand | - | - |
| 53 | 83 | 5918_DISDSUB | Accts 591-598 - Distribution-Demand-Subs | 4,629 | 5,405 |
| 54 | 84 | 5918_DISDPRI | Accts 591-598 - Distribution-Demand-Primary | 18,628 | 21,749 |
| 55 | 85 | 5918_DISDSEC | Accts 591-598 - Distribution-Demand-Secondary | 8,569 | 10,005 |
| 56 | 86 | 5918_DISCSRV | Accts 591-598 - Distribution-Customer-Services | - | - |
| 57 | 87 | 5918_DISCMTR | Accts 591-598 - Distribution-Customer-Meters | - | - |
| 58 | 88 | 5918_DISCMTRR | Accts 591-598 - Distribution-Customer-Meter Reading | - | - |
| 59 | 89 | 5918_DISCBIL | Accts 591-598 - Distribution-Customer-Billing & Collections | - | - |
| 60 | 90 | 5918_DISCINF | Accts 591-598 - Distribution-Customer-Service & Info | - | - |
| 61 | 91 | 5918_DISCOTH | Accts 591-598 - Distribution-Customer-Other | 3 | 210 |
| 62 | 92 | CACT_DISCMTRR | Cust Accts - Distribution-Customer-Meter Reading | - | - |
| 63 | 93 | CACT_DISCBIL | Cust Accts - Distribution-Customer-Billing & Collections | - | - |
| 64 | 94 | CACT_DISCINF | Cust Accts - Distribution-Customer-Service & Info | - | - |
| 65 | 95 | CACT_DISCOTH | Cust Accts - Distribution-Customer-Other | 486 | 556 |
| 66 | 96 | LA_PROD | Labor - Production-Demand | 4,499 | 5,184 |
| 67 | 97 | LA_PROEF | Labor - Production-Energy-Fuel | - | - |
| 68 | 98 | LA_PROENF | Labor - Production-Energy-Non-Fuel | - | - |
| 69 | 99 | LA_STO_PRO_D | Labor - Storage-Production-Demand | - | - |
| 70 | 100 | LA_STO_TRA_D | Labor - Storage-Transmission-Demand | - | - |
| 71 | 101 | LA_STO_DIS_DSUB | Labor - Storage-Distribution-Demand-Subs | - | - |
| 72 | 102 | LA_STO_DIS_DPRI | Labor - Storage-Distribution-Demand-Primary | - | - |
| 73 | 103 | LA_STO_DIS_DSEC | Labor - Storage-Distribution-Demand-Secondary | - | - |
| 74 | 104 | LA_TRAD | Labor - Transmission-Demand | 3,499 | 5,362 |
| 75 | 105 | LA_DISDSUB | Labor - Distribution-Demand-Subs | 7,219 | 8,429 |
| 76 | 106 | LA_DISDPRI | Labor - Distribution-Demand-Primary | 18,936 | 22,108 |
| 77 | 107 | LA_DISDSEC | Labor - Distribution-Demand-Secondary | 8,710 | 10,170 |
| 78 | 108 | LA_DISCSRV | Labor - Distribution-Customer-Services | - | - |
| 1 | 109 | LA_DISCMTR | Labor - Distribution-Customer-Meters | - | - |

This schedule is sponsored by PNM Witness Larkin

**PUBLIC SERVICE OF NEW MEXICO**
**Test Period Ending September 30th, 2028**

| Line No. | Factor No. | Class_Factors | | dule 20-Customer O |
|---|---|---|---|---|
| | | | | Streetlighting |
| 41 | 71 | 5819_DISCBIL | Accts 581-589 - Distribution-Customer-Billing & Collections | - |
| 42 | 72 | 5819_DISCINF | Accts 581-589 - Distribution-Customer-Service & Info | - |
| 43 | 73 | 5819_DISCOTH | Accts 581-589 - Distribution-Customer-Other | 2 |
| 44 | 74 | 5918_PROD | Accts 591-598 - Production-Demand | - |
| 45 | 75 | 5918_PROEF | Accts 591-598 - Production-Energy-Fuel | - |
| 46 | 76 | 5918_PROENF | Accts 591-598 - Production-Energy-Non-Fuel | - |
| 47 | 77 | 5918_STO_PRO_D | Accts 591-598 - Storage-Production-Demand | - |
| 48 | 78 | 5918_STO_TRA_D | Accts 591-598 - Storage-Transmission-Demand | - |
| 49 | 79 | 5918_STO_DIS_DSUB | Accts 591-598 - Storage-Distribution-Demand-Subs | - |
| 50 | 80 | 5918_STO_DIS_DPRI | Accts 591-598 - Storage-Distribution-Demand-Primary | - |
| 51 | 81 | 5918_STO_DIS_DSEC | Accts 591-598 - Storage-Distribution-Demand-Secondary | - |
| 52 | 82 | 5918_TRAD | Accts 591-598 - Transmission-Demand | - |
| 53 | 83 | 5918_DISDSUB | Accts 591-598 - Distribution-Demand-Subs | 7,242 |
| 54 | 84 | 5918_DISDPRI | Accts 591-598 - Distribution-Demand-Primary | 29,145 |
| 55 | 85 | 5918_DISDSEC | Accts 591-598 - Distribution-Demand-Secondary | 13,407 |
| 56 | 86 | 5918_DISCSRV | Accts 591-598 - Distribution-Customer-Services | - |
| 57 | 87 | 5918_DISCMTR | Accts 591-598 - Distribution-Customer-Meters | - |
| 58 | 88 | 5918_DISCMTRR | Accts 591-598 - Distribution-Customer-Meter Reading | - |
| 59 | 89 | 5918_DISCBIL | Accts 591-598 - Distribution-Customer-Billing & Collections | - |
| 60 | 90 | 5918_DISCINF | Accts 591-598 - Distribution-Customer-Service & Info | - |
| 61 | 91 | 5918_DISCOTH | Accts 591-598 - Distribution-Customer-Other | 0 |
| 62 | 92 | CACT_DISCMTRR | Cust Accts - Distribution-Customer-Meter Reading | - |
| 63 | 93 | CACT_DISCBIL | Cust Accts - Distribution-Customer-Billing & Collections | - |
| 64 | 94 | CACT_DISCINF | Cust Accts - Distribution-Customer-Service & Info | - |
| 65 | 95 | CACT_DISCOTH | Cust Accts - Distribution-Customer-Other | 745 |
| 66 | 96 | LA_PROD | Labor - Production-Demand | 6,946 |
| 67 | 97 | LA_PROEF | Labor - Production-Energy-Fuel | - |
| 68 | 98 | LA_PROENF | Labor - Production-Energy-Non-Fuel | - |
| 69 | 99 | LA_STO_PRO_D | Labor - Storage-Production-Demand | - |
| 70 | 100 | LA_STO_TRA_D | Labor - Storage-Transmission-Demand | - |
| 71 | 101 | LA_STO_DIS_DSUB | Labor - Storage-Distribution-Demand-Subs | - |
| 72 | 102 | LA_STO_DIS_DPRI | Labor - Storage-Distribution-Demand-Primary | - |
| 73 | 103 | LA_STO_DIS_DSEC | Labor - Storage-Distribution-Demand-Secondary | - |
| 74 | 104 | LA_TRAD | Labor - Transmission-Demand | 4,001 |
| 75 | 105 | LA_DISDSUB | Labor - Distribution-Demand-Subs | 11,294 |
| 76 | 106 | LA_DISDPRI | Labor - Distribution-Demand-Primary | 29,625 |
| 77 | 107 | LA_DISDSEC | Labor - Distribution-Demand-Secondary | 13,628 |
| 78 | 108 | LA_DISCSRV | Labor - Distribution-Customer-Services | - |
| 1 | 109 | LA_DISCMTR | Labor - Distribution-Customer-Meters | - |

This schedule is sponsored by PNM Witness Larkin

**PUBLIC SERVICE OF NEW MEXICO**
**Test Period Ending September 30th, 2028**

Class_Factors

| Line No. | Factor No. | | | Other Input |
|---|---|---|---|---|
| 2 | 110 | LA_DISCMTRR | Labor - Distribution-Customer-Meter Reading | |
| 3 | 111 | LA_DISCBIL | Labor - Distribution-Customer-Billing & Collections | |
| 4 | 112 | LA_DISCINF | Labor - Distribution-Customer-Service & Info | |
| 5 | 113 | LA_DISCOTH | Labor - Distribution-Customer-Other | |
| 6 | 168 | RBASE_PROD | RBASE - Production-Demand | |
| 7 | 169 | RBASE_PROEF | RBASE - Production-Energy-Fuel | |
| 8 | 170 | RBASE_PROENF | RBASE - Production-Energy-Non-Fuel | |
| 9 | 171 | RBASE_STO_PRO_D | RBASE - Storage-Production-Demand | |
| 10 | 172 | RBASE_STO_TRA_D | RBASE - Storage-Transmission-Demand | |
| 11 | 173 | RBASE_STO_DIS_DSUB | RBASE - Storage-Distribution-Demand-Subs | |
| 12 | 174 | RBASE_STO_DIS_DPRI | RBASE - Storage-Distribution-Demand-Primary | |
| 13 | 175 | RBASE_STO_DIS_DSEC | RBASE - Storage-Distribution-Demand-Secondary | |
| 14 | 176 | RBASE_TRAD | RBASE - Transmission-Demand | |
| 15 | 177 | RBASE_DISDSUB | RBASE - Distribution-Demand-Subs | |
| 16 | 178 | RBASE_DISDPRI | RBASE - Distribution-Demand-Primary | |
| 17 | 179 | RBASE_DISDSEC | RBASE - Distribution-Demand-Secondary | |
| 18 | 180 | RBASE_DISCSRV | RBASE - Distribution-Customer-Services | |
| 19 | 181 | RBASE_DISCMTR | RBASE - Distribution-Customer-Meters | |
| 20 | 182 | RBASE_DISCMTRR | RBASE - Distribution-Customer-Meter Reading | |
| 21 | 183 | RBASE_DISCBIL | RBASE - Distribution-Customer-Billing & Collections | |
| 22 | 184 | RBASE_DISCINF | RBASE - Distribution-Customer-Service & Info | |
| 23 | 185 | RBASE_DISCOTH | RBASE - Distribution-Customer-Other | |
| 24 | 186 | | | |
| 25 | 187 | | | |
| 26 | 188 | TOTAL_O&M_PROD | Total O&M Expense - Production-Demand | |
| 27 | 189 | TOTAL_O&M_PROEF | Total O&M Expense - Production-Energy-Fuel | |
| 28 | 190 | TOTAL_O&M_PROENF | Total O&M Expense - Production-Energy-Non-Fuel | |
| 29 | 191 | TOTAL_O&M_STO_PRO_D | Total O&M Expense - Storage-Production-Demand | |
| 30 | 192 | TOTAL_O&M_STO_TRA_D | Total O&M Expense - Storage-Transmission-Demand | |
| 31 | 193 | TOTAL_O&M_STO_DIS_DSUB | Total O&M Expense - Storage-Distribution-Demand-Subs | |
| 32 | 194 | TOTAL_O&M_STO_DIS_DPRI | Total O&M Expense - Storage-Distribution-Demand-Primary | |
| 33 | 195 | TOTAL_O&M_STO_DIS_DSEC | Total O&M Expense - Storage-Distribution-Demand-Secondary | |
| 34 | 196 | TOTAL_O&M_TRAD | Total O&M Expense - Transmission-Demand | |
| 35 | 197 | TOTAL_O&M_DISDSUB | Total O&M Expense - Distribution-Demand-Subs | |
| 36 | 198 | TOTAL_O&M_DISDPRI | Total O&M Expense - Distribution-Demand-Primary | |
| 37 | 199 | TOTAL_O&M_DISDSEC | Total O&M Expense - Distribution-Demand-Secondary | |
| 38 | 200 | TOTAL_O&M_DISCSRV | Total O&M Expense - Distribution-Customer-Services | |
| 39 | 201 | TOTAL_O&M_DISCMTR | Total O&M Expense - Distribution-Customer-Meters | |
| 40 | 202 | TOTAL_O&M_DISCMTRR | Total O&M Expense - Distribution-Customer-Meter Reading | |

**PUBLIC SERVICE OF NEW MEXICO**
**Test Period Ending September 30th, 2028**

| Class_Factors | Factor No. | | | | Schedule 1 |
|---|---|---|---|---|---|
| Line No. | | | | PNM Retail | Residential |
| 2 | 110 | LA_DISCMTRR | Labor - Distribution-Customer-Meter Reading | 4,367,032 | 3,841,944 |
| 3 | 111 | LA_DISCBIL | Labor - Distribution-Customer-Billing & Collections | 6,448,439 | 5,673,084 |
| 4 | 112 | LA_DISCINF | Labor - Distribution-Customer-Service & Info | - | - |
| 5 | 113 | LA_DISCOTH | Labor - Distribution-Customer-Other | 7,113,423 | 5,348,708 |
| 6 | 168 | RBASE_PROD | RBASE - Production-Demand | 1,037,905,495 | 503,835,957 |
| 7 | 169 | RBASE_PROEF | RBASE - Production-Energy-Fuel | - | - |
| 8 | 170 | RBASE_PROENF | RBASE - Production-Energy-Non-Fuel | 66,656,219 | 22,120,344 |
| 9 | 171 | RBASE_STO_PRO_D | RBASE - Storage-Production-Demand | 192,213,406 | 93,307,171 |
| 10 | 172 | RBASE_STO_TRA_D | RBASE - Storage-Transmission-Demand | 70,886,145 | 26,693,536 |
| 11 | 173 | RBASE_STO_DIS_DSUB | RBASE - Storage-Distribution-Demand-Subs | 14,304,388 | 7,176,072 |
| 12 | 174 | RBASE_STO_DIS_DPRI | RBASE - Storage-Distribution-Demand-Primary | 33,264,543 | 17,730,822 |
| 13 | 175 | RBASE_STO_DIS_DSEC | RBASE - Storage-Distribution-Demand-Secondary | - | - |
| 14 | 176 | RBASE_TRAD | RBASE - Transmission-Demand | 647,153,919 | 243,698,206 |
| 15 | 177 | RBASE_DISDSUB | RBASE - Distribution-Demand-Subs | 409,554,751 | 205,461,037 |
| 16 | 178 | RBASE_DISDPRI | RBASE - Distribution-Demand-Primary | 955,446,898 | 509,276,756 |
| 17 | 179 | RBASE_DISDSEC | RBASE - Distribution-Demand-Secondary | 395,202,014 | 234,268,267 |
| 18 | 180 | RBASE_DISCSRV | RBASE - Distribution-Customer-Services | 156,108,116 | 143,430,701 |
| 19 | 181 | RBASE_DISCMTR | RBASE - Distribution-Customer-Meters | 126,205,872 | 87,884,716 |
| 20 | 182 | RBASE_DISCMTRR | RBASE - Distribution-Customer-Meter Reading | 22,759,055 | 20,022,526 |
| 21 | 183 | RBASE_DISCBIL | RBASE - Distribution-Customer-Billing & Collections | 33,606,436 | 29,565,627 |
| 22 | 184 | RBASE_DISCINF | RBASE - Distribution-Customer-Service & Info | - | - |
| 23 | 185 | RBASE_DISCOTH | RBASE - Distribution-Customer-Other | 53,992,040 | 21,787,412 |
| 24 | 186 | | | | |
| 25 | 187 | | | | |
| 26 | 188 | TOTAL_O&M_PROD | Total O&M Expense - Production-Demand | 121,796,233 | 59,124,190 |
| 27 | 189 | TOTAL_O&M_PROEF | Total O&M Expense - Production-Energy-Fuel | - | - |
| 28 | 190 | TOTAL_O&M_PROENF | Total O&M Expense - Production-Energy-Non-Fuel | 33,722,510 | 11,191,056 |
| 29 | 191 | TOTAL_O&M_STO_PRO_D | Total O&M Expense - Storage-Production-Demand | 66,793,596 | 32,423,969 |
| 30 | 192 | TOTAL_O&M_STO_TRA_D | Total O&M Expense - Storage-Transmission-Demand | 72,140,964 | 27,166,062 |
| 31 | 193 | TOTAL_O&M_STO_DIS_DSUB | Total O&M Expense - Storage-Distribution-Demand-Subs | 45,508 | 22,830 |
| 32 | 194 | TOTAL_O&M_STO_DIS_DPRI | Total O&M Expense - Storage-Distribution-Demand-Primary | 105,828 | 56,409 |
| 33 | 195 | TOTAL_O&M_STO_DIS_DSEC | Total O&M Expense - Storage-Distribution-Demand-Secondary | - | - |
| 34 | 196 | TOTAL_O&M_TRAD | Total O&M Expense - Transmission-Demand | 61,405,269 | 23,123,330 |
| 35 | 197 | TOTAL_O&M_DISDSUB | Total O&M Expense - Distribution-Demand-Subs | 17,598,305 | 8,828,529 |
| 36 | 198 | TOTAL_O&M_DISDPRI | Total O&M Expense - Distribution-Demand-Primary | 46,812,652 | 24,952,298 |
| 37 | 199 | TOTAL_O&M_DISDSEC | Total O&M Expense - Distribution-Demand-Secondary | 19,363,143 | 11,478,104 |
| 38 | 200 | TOTAL_O&M_DISCSRV | Total O&M Expense - Distribution-Customer-Services | 3,873,860 | 3,559,267 |
| 39 | 201 | TOTAL_O&M_DISCMTR | Total O&M Expense - Distribution-Customer-Meters | 30,154,180 | 20,998,164 |
| 40 | 202 | TOTAL_O&M_DISCMTRR | Total O&M Expense - Distribution-Customer-Meter Reading | 16,868,316 | 14,840,085 |

This schedule is sponsored by PNM Witness Larkin

**PUBLIC SERVICE OF NEW MEXICO**
**Test Period Ending September 30th, 2028**

| Class_Factors Line No. | Factor No. | | | Schedule 1B Residential | Schedule 2 Small Power |
|---|---|---|---|---|---|
| 2 | 110 | LA_DISCMTRR | Labor - Distribution-Customer-Meter Reading | 61,943 | 421,218 |
| 3 | 111 | LA_DISCBIL | Labor - Distribution-Customer-Billing & Collections | 91,465 | 621,978 |
| 4 | 112 | LA_DISCINF | Labor - Distribution-Customer-Service & Info | - | - |
| 5 | 113 | LA_DISCOTH | Labor - Distribution-Customer-Other | 83,908 | 665,448 |
| 6 | 168 | RBASE_PROD | RBASE - Production-Demand | 5,435,039 | 111,369,893 |
| 7 | 169 | RBASE_PROEF | RBASE - Production-Energy-Fuel | - | - |
| 8 | 170 | RBASE_PROENF | RBASE - Production-Energy-Non-Fuel | 244,949 | 6,218,053 |
| 9 | 171 | RBASE_STO_PRO_D | RBASE - Storage-Production-Demand | 1,006,534 | 20,624,986 |
| 10 | 172 | RBASE_STO_TRA_D | RBASE - Storage-Transmission-Demand | 283,719 | 5,785,299 |
| 11 | 173 | RBASE_STO_DIS_DSUB | RBASE - Storage-Distribution-Demand-Subs | 79,450 | 1,740,946 |
| 12 | 174 | RBASE_STO_DIS_DPRI | RBASE - Storage-Distribution-Demand-Primary | 196,308 | 4,301,573 |
| 13 | 175 | RBASE_STO_DIS_DSEC | RBASE - Storage-Distribution-Demand-Secondary | - | - |
| 14 | 176 | RBASE_TRAD | RBASE - Transmission-Demand | 2,590,208 | 52,816,795 |
| 15 | 177 | RBASE_DISDSUB | RBASE - Distribution-Demand-Subs | 2,274,777 | 49,845,720 |
| 16 | 178 | RBASE_DISDPRI | RBASE - Distribution-Demand-Primary | 5,638,495 | 123,552,703 |
| 17 | 179 | RBASE_DISDSEC | RBASE - Distribution-Demand-Secondary | 2,593,718 | 56,834,476 |
| 18 | 180 | RBASE_DISCSRV | RBASE - Distribution-Customer-Services | 2,312,491 | 10,267,655 |
| 19 | 181 | RBASE_DISCMTR | RBASE - Distribution-Customer-Meters | 1,416,940 | 24,506,048 |
| 20 | 182 | RBASE_DISCMTRR | RBASE - Distribution-Customer-Meter Reading | 322,817 | 2,195,204 |
| 21 | 183 | RBASE_DISCBIL | RBASE - Distribution-Customer-Billing & Collections | 476,678 | 3,241,478 |
| 22 | 184 | RBASE_DISCINF | RBASE - Distribution-Customer-Service & Info | - | - |
| 23 | 185 | RBASE_DISCOTH | RBASE - Distribution-Customer-Other | 314,576 | 3,060,127 |
| 24 | 186 | | | | |
| 25 | 187 | | | | |
| 26 | 188 | TOTAL_O&M_PROD | Total O&M Expense - Production-Demand | 637,791 | 13,069,045 |
| 27 | 189 | TOTAL_O&M_PROEF | Total O&M Expense - Production-Energy-Fuel | - | - |
| 28 | 190 | TOTAL_O&M_PROENF | Total O&M Expense - Production-Energy-Non-Fuel | 123,924 | 3,145,818 |
| 29 | 191 | TOTAL_O&M_STO_PRO_D | Total O&M Expense - Storage-Production-Demand | 349,768 | 7,167,122 |
| 30 | 192 | TOTAL_O&M_STO_TRA_D | Total O&M Expense - Storage-Transmission-Demand | 288,741 | 5,887,710 |
| 31 | 193 | TOTAL_O&M_STO_DIS_DSUB | Total O&M Expense - Storage-Distribution-Demand-Subs | 253 | 5,539 |
| 32 | 194 | TOTAL_O&M_STO_DIS_DPRI | Total O&M Expense - Storage-Distribution-Demand-Primary | 625 | 13,685 |
| 33 | 195 | TOTAL_O&M_STO_DIS_DSEC | Total O&M Expense - Storage-Distribution-Demand-Secondary | - | - |
| 34 | 196 | TOTAL_O&M_TRAD | Total O&M Expense - Transmission-Demand | 245,772 | 5,011,527 |
| 35 | 197 | TOTAL_O&M_DISDSUB | Total O&M Expense - Distribution-Demand-Subs | 97,746 | 2,141,839 |
| 36 | 198 | TOTAL_O&M_DISDPRI | Total O&M Expense - Distribution-Demand-Primary | 276,261 | 6,053,533 |
| 37 | 199 | TOTAL_O&M_DISDSEC | Total O&M Expense - Distribution-Demand-Secondary | 127,081 | 2,784,637 |
| 38 | 200 | TOTAL_O&M_DISCSRV | Total O&M Expense - Distribution-Customer-Services | 57,385 | 254,794 |
| 39 | 201 | TOTAL_O&M_DISCMTR | Total O&M Expense - Distribution-Customer-Meters | 338,547 | 5,855,193 |
| 40 | 202 | TOTAL_O&M_DISCMTRR | Total O&M Expense - Distribution-Customer-Meter Reading | 239,262 | 1,627,018 |

This schedule is sponsored by PNM Witness Larkin

**PUBLIC SERVICE OF NEW MEXICO**
**Test Period Ending September 30th, 2028**

| Class_Factors Line No. | Factor No. | | | Schedule 2B Small Power | Schedule 3B General Power |
|---|---|---|---|---|---|
| 2 | 110 | LA_DISCMTRR | Labor - Distribution-Customer-Meter Reading | 3,990 | 21,547 |
| 3 | 111 | LA_DISCBIL | Labor - Distribution-Customer-Billing & Collections | 5,892 | 31,816 |
| 4 | 112 | LA_DISCINF | Labor - Distribution-Customer-Service & Info | - | - |
| 5 | 113 | LA_DISCOTH | Labor - Distribution-Customer-Other | 6,885 | 223,590 |
| 6 | 168 | RBASE_PROD | RBASE - Production-Demand | 1,461,238 | 164,296,938 |
| 7 | 169 | RBASE_PROEF | RBASE - Production-Energy-Fuel | - | - |
| 8 | 170 | RBASE_PROENF | RBASE - Production-Energy-Non-Fuel | 86,765 | 9,414,652 |
| 9 | 171 | RBASE_STO_PRO_D | RBASE - Storage-Production-Demand | 270,612 | 30,426,734 |
| 10 | 172 | RBASE_STO_TRA_D | RBASE - Storage-Transmission-Demand | 61,535 | 8,650,504 |
| 11 | 173 | RBASE_STO_DIS_DSUB | RBASE - Storage-Distribution-Demand-Subs | 23,071 | 2,077,476 |
| 12 | 174 | RBASE_STO_DIS_DPRI | RBASE - Storage-Distribution-Demand-Primary | 57,004 | 5,133,080 |
| 13 | 175 | RBASE_STO_DIS_DSEC | RBASE - Storage-Distribution-Demand-Secondary | - | - |
| 14 | 176 | RBASE_TRAD | RBASE - Transmission-Demand | 561,782 | 78,974,636 |
| 15 | 177 | RBASE_DISDSUB | RBASE - Distribution-Demand-Subs | 660,546 | 59,481,048 |
| 16 | 178 | RBASE_DISDPRI | RBASE - Distribution-Demand-Primary | 1,637,296 | 147,435,813 |
| 17 | 179 | RBASE_DISDSEC | RBASE - Distribution-Demand-Secondary | 753,159 | 67,820,752 |
| 18 | 180 | RBASE_DISCSRV | RBASE - Distribution-Customer-Services | 97,269 | - |
| 19 | 181 | RBASE_DISCMTR | RBASE - Distribution-Customer-Meters | 232,153 | 5,547,176 |
| 20 | 182 | RBASE_DISCMTRR | RBASE - Distribution-Customer-Meter Reading | 20,796 | 112,291 |
| 21 | 183 | RBASE_DISCBIL | RBASE - Distribution-Customer-Billing & Collections | 30,708 | 165,812 |
| 22 | 184 | RBASE_DISCINF | RBASE - Distribution-Customer-Service & Info | - | - |
| 23 | 185 | RBASE_DISCOTH | RBASE - Distribution-Customer-Other | 28,152 | 764,996 |
| 24 | 186 | | | | |
| 25 | 187 | | | | |
| 26 | 188 | TOTAL_O&M_PROD | Total O&M Expense - Production-Demand | 171,473 | 19,279,933 |
| 27 | 189 | TOTAL_O&M_PROEF | Total O&M Expense - Production-Energy-Fuel | - | - |
| 28 | 190 | TOTAL_O&M_PROENF | Total O&M Expense - Production-Energy-Non-Fuel | 43,896 | 4,763,032 |
| 29 | 191 | TOTAL_O&M_STO_PRO_D | Total O&M Expense - Storage-Production-Demand | 94,037 | 10,573,201 |
| 30 | 192 | TOTAL_O&M_STO_TRA_D | Total O&M Expense - Storage-Transmission-Demand | 62,624 | 8,803,634 |
| 31 | 193 | TOTAL_O&M_STO_DIS_DSUB | Total O&M Expense - Storage-Distribution-Demand-Subs | 73 | 6,609 |
| 32 | 194 | TOTAL_O&M_STO_DIS_DPRI | Total O&M Expense - Storage-Distribution-Demand-Primary | 181 | 16,330 |
| 33 | 195 | TOTAL_O&M_STO_DIS_DSEC | Total O&M Expense - Storage-Distribution-Demand-Secondary | - | - |
| 34 | 196 | TOTAL_O&M_TRAD | Total O&M Expense - Transmission-Demand | 53,305 | 7,493,517 |
| 35 | 197 | TOTAL_O&M_DISDSUB | Total O&M Expense - Distribution-Demand-Subs | 28,383 | 2,555,863 |
| 36 | 198 | TOTAL_O&M_DISDPRI | Total O&M Expense - Distribution-Demand-Primary | 80,220 | 7,223,700 |
| 37 | 199 | TOTAL_O&M_DISDSEC | Total O&M Expense - Distribution-Demand-Secondary | 36,901 | 3,322,915 |
| 38 | 200 | TOTAL_O&M_DISCSRV | Total O&M Expense - Distribution-Customer-Services | 2,414 | - |
| 39 | 201 | TOTAL_O&M_DISCMTR | Total O&M Expense - Distribution-Customer-Meters | 55,468 | 1,325,378 |
| 40 | 202 | TOTAL_O&M_DISCMTRR | Total O&M Expense - Distribution-Customer-Meter Reading | 15,413 | 83,227 |

This schedule is sponsored by PNM Witness Larkin

**PUBLIC SERVICE OF NEW MEXICO**
**Test Period Ending September 30th, 2028**

| Class_Factors Line No. | Factor No. | | | Schedule 3C GP Low LF | Schedule 3D General Power Gov |
|---|---|---|---|---|---|
| 2 | 110 | LA_DISCMTRR | Labor - Distribution-Customer-Meter Reading | 9,738 | 1,281 |
| 3 | 111 | LA_DISCBIL | Labor - Distribution-Customer-Billing & Collections | 14,380 | 1,891 |
| 4 | 112 | LA_DISCINF | Labor - Distribution-Customer-Service & Info | - | - |
| 5 | 113 | LA_DISCOTH | Labor - Distribution-Customer-Other | 61,705 | 16,594 |
| 6 | 168 | RBASE_PROD | RBASE - Production-Demand | 37,824,518 | 11,456,421 |
| 7 | 169 | RBASE_PROEF | RBASE - Production-Energy-Fuel | - | - |
| 8 | 170 | RBASE_PROENF | RBASE - Production-Energy-Non-Fuel | 2,366,664 | 718,135 |
| 9 | 171 | RBASE_STO_PRO_D | RBASE - Storage-Production-Demand | 7,004,857 | 2,121,655 |
| 10 | 172 | RBASE_STO_TRA_D | RBASE - Storage-Transmission-Demand | 1,853,953 | 619,870 |
| 11 | 173 | RBASE_STO_DIS_DSUB | RBASE - Storage-Distribution-Demand-Subs | 651,964 | 148,885 |
| 12 | 174 | RBASE_STO_DIS_DPRI | RBASE - Storage-Distribution-Demand-Primary | 1,610,890 | 367,870 |
| 13 | 175 | RBASE_STO_DIS_DSEC | RBASE - Storage-Distribution-Demand-Secondary | - | - |
| 14 | 176 | RBASE_TRAD | RBASE - Transmission-Demand | 16,925,631 | 5,659,092 |
| 15 | 177 | RBASE_DISDSUB | RBASE - Distribution-Demand-Subs | 18,666,653 | 4,262,795 |
| 16 | 178 | RBASE_DISDPRI | RBASE - Distribution-Demand-Primary | 46,269,076 | 10,566,200 |
| 17 | 179 | RBASE_DISDSEC | RBASE - Distribution-Demand-Secondary | 21,283,862 | 4,860,472 |
| 18 | 180 | RBASE_DISCSRV | RBASE - Distribution-Customer-Services | - | - |
| 19 | 181 | RBASE_DISCMTR | RBASE - Distribution-Customer-Meters | 2,507,113 | 329,733 |
| 20 | 182 | RBASE_DISCMTRR | RBASE - Distribution-Customer-Meter Reading | 50,751 | 6,675 |
| 21 | 183 | RBASE_DISCBIL | RBASE - Distribution-Customer-Billing & Collections | 74,940 | 9,856 |
| 22 | 184 | RBASE_DISCINF | RBASE - Distribution-Customer-Service & Info | - | - |
| 23 | 185 | RBASE_DISCOTH | RBASE - Distribution-Customer-Other | 201,459 | 58,387 |
| 24 | 186 | | | | |
| 25 | 187 | | | | |
| 26 | 188 | TOTAL_O&M_PROD | Total O&M Expense - Production-Demand | 4,438,635 | 1,344,389 |
| 27 | 189 | TOTAL_O&M_PROEF | Total O&M Expense - Production-Energy-Fuel | - | - |
| 28 | 190 | TOTAL_O&M_PROENF | Total O&M Expense - Production-Energy-Non-Fuel | 1,197,336 | 363,316 |
| 29 | 191 | TOTAL_O&M_STO_PRO_D | Total O&M Expense - Storage-Production-Demand | 2,434,167 | 737,269 |
| 30 | 192 | TOTAL_O&M_STO_TRA_D | Total O&M Expense - Storage-Transmission-Demand | 1,886,771 | 630,843 |
| 31 | 193 | TOTAL_O&M_STO_DIS_DSUB | Total O&M Expense - Storage-Distribution-Demand-Subs | 2,074 | 474 |
| 32 | 194 | TOTAL_O&M_STO_DIS_DPRI | Total O&M Expense - Storage-Distribution-Demand-Primary | 5,125 | 1,170 |
| 33 | 195 | TOTAL_O&M_STO_DIS_DSEC | Total O&M Expense - Storage-Distribution-Demand-Secondary | - | - |
| 34 | 196 | TOTAL_O&M_TRAD | Total O&M Expense - Transmission-Demand | 1,605,990 | 536,964 |
| 35 | 197 | TOTAL_O&M_DISDSUB | Total O&M Expense - Distribution-Demand-Subs | 802,094 | 183,170 |
| 36 | 198 | TOTAL_O&M_DISDPRI | Total O&M Expense - Distribution-Demand-Primary | 2,266,979 | 517,697 |
| 37 | 199 | TOTAL_O&M_DISDSEC | Total O&M Expense - Distribution-Demand-Secondary | 1,042,815 | 238,142 |
| 38 | 200 | TOTAL_O&M_DISCSRV | Total O&M Expense - Distribution-Customer-Services | - | - |
| 39 | 201 | TOTAL_O&M_DISCMTR | Total O&M Expense - Distribution-Customer-Meters | 599,021 | 78,783 |
| 40 | 202 | TOTAL_O&M_DISCMTRR | Total O&M Expense - Distribution-Customer-Meter Reading | 37,615 | 4,947 |

This schedule is sponsored by PNM Witness Larkin

**PUBLIC SERVICE OF NEW MEXICO**
**Test Period Ending September 30th, 2028**

| Class_Factors Line No. | Factor No. | | | Schedule 3E GP Low LF Gov |
|---|---|---|---|---|
| 2 | 110 | LA_DISCMTRR | Labor - Distribution-Customer-Meter Reading | 557 |
| 3 | 111 | LA_DISCBIL | Labor - Distribution-Customer-Billing & Collections | 823 |
| 4 | 112 | LA_DISCINF | Labor - Distribution-Customer-Service & Info | - |
| 5 | 113 | LA_DISCOTH | Labor - Distribution-Customer-Other | 3,858 |
| 6 | 168 | RBASE_PROD | RBASE - Production-Demand | 2,419,662 |
| 7 | 169 | RBASE_PROEF | RBASE - Production-Energy-Fuel | - |
| 8 | 170 | RBASE_PROENF | RBASE - Production-Energy-Non-Fuel | 151,140 |
| 9 | 171 | RBASE_STO_PRO_D | RBASE - Storage-Production-Demand | 448,106 |
| 10 | 172 | RBASE_STO_TRA_D | RBASE - Storage-Transmission-Demand | 127,474 |
| 11 | 173 | RBASE_STO_DIS_DSUB | RBASE - Storage-Distribution-Demand-Subs | 42,119 |
| 12 | 174 | RBASE_STO_DIS_DPRI | RBASE - Storage-Distribution-Demand-Primary | 104,068 |
| 13 | 175 | RBASE_STO_DIS_DSEC | RBASE - Storage-Distribution-Demand-Secondary | - |
| 14 | 176 | RBASE_TRAD | RBASE - Transmission-Demand | 1,163,769 |
| 15 | 177 | RBASE_DISDSUB | RBASE - Distribution-Demand-Subs | 1,205,917 |
| 16 | 178 | RBASE_DISDPRI | RBASE - Distribution-Demand-Primary | 2,989,110 |
| 17 | 179 | RBASE_DISDSEC | RBASE - Distribution-Demand-Secondary | 1,374,996 |
| 18 | 180 | RBASE_DISCSRV | RBASE - Distribution-Customer-Services | - |
| 19 | 181 | RBASE_DISCMTR | RBASE - Distribution-Customer-Meters | 143,413 |
| 20 | 182 | RBASE_DISCMTRR | RBASE - Distribution-Customer-Meter Reading | 2,903 |
| 21 | 183 | RBASE_DISCBIL | RBASE - Distribution-Customer-Billing & Collections | 4,287 |
| 22 | 184 | RBASE_DISCINF | RBASE - Distribution-Customer-Service & Info | - |
| 23 | 185 | RBASE_DISCOTH | RBASE - Distribution-Customer-Other | 12,667 |
| 24 | 186 | | | |
| 25 | 187 | | | |
| 26 | 188 | TOTAL_O&M_PROD | Total O&M Expense - Production-Demand | 283,943 |
| 27 | 189 | TOTAL_O&M_PROEF | Total O&M Expense - Production-Energy-Fuel | - |
| 28 | 190 | TOTAL_O&M_PROENF | Total O&M Expense - Production-Energy-Non-Fuel | 76,464 |
| 29 | 191 | TOTAL_O&M_STO_PRO_D | Total O&M Expense - Storage-Production-Demand | 155,715 |
| 30 | 192 | TOTAL_O&M_STO_TRA_D | Total O&M Expense - Storage-Transmission-Demand | 129,730 |
| 31 | 193 | TOTAL_O&M_STO_DIS_DSUB | Total O&M Expense - Storage-Distribution-Demand-Subs | 134 |
| 32 | 194 | TOTAL_O&M_STO_DIS_DPRI | Total O&M Expense - Storage-Distribution-Demand-Primary | 331 |
| 33 | 195 | TOTAL_O&M_STO_DIS_DSEC | Total O&M Expense - Storage-Distribution-Demand-Secondary | - |
| 34 | 196 | TOTAL_O&M_TRAD | Total O&M Expense - Transmission-Demand | 110,424 |
| 35 | 197 | TOTAL_O&M_DISDSUB | Total O&M Expense - Distribution-Demand-Subs | 51,817 |
| 36 | 198 | TOTAL_O&M_DISDPRI | Total O&M Expense - Distribution-Demand-Primary | 146,453 |
| 37 | 199 | TOTAL_O&M_DISDSEC | Total O&M Expense - Distribution-Demand-Secondary | 67,369 |
| 38 | 200 | TOTAL_O&M_DISCSRV | Total O&M Expense - Distribution-Customer-Services | - |
| 39 | 201 | TOTAL_O&M_DISCMTR | Total O&M Expense - Distribution-Customer-Meters | 34,265 |
| 40 | 202 | TOTAL_O&M_DISCMTRR | Total O&M Expense - Distribution-Customer-Meter Reading | 2,152 |

This schedule is sponsored by PNM Witness Larkin

**PUBLIC SERVICE OF NEW MEXICO**
**Test Period Ending September 30th, 2028**

| Line No. | Class_Factors Factor No. | | | Schedule 3F GP Charging Stations | Schedule 4 Large Power |
|---|---|---|---|---|---|
| 2 | 110 | LA_DISCMTRR | Labor - Distribution-Customer-Meter Reading | 172 | 1,214 |
| 3 | 111 | LA_DISCBIL | Labor - Distribution-Customer-Billing & Collections | 254 | 1,793 |
| 4 | 112 | LA_DISCINF | Labor - Distribution-Customer-Service & Info | - | - |
| 5 | 113 | LA_DISCOTH | Labor - Distribution-Customer-Other | 1,588 | 138,860 |
| 6 | 168 | RBASE_PROD | RBASE - Production-Demand | 944,840 | 96,955,549 |
| 7 | 169 | RBASE_PROEF | RBASE - Production-Energy-Fuel | - | - |
| 8 | 170 | RBASE_PROENF | RBASE - Production-Energy-Non-Fuel | 65,709 | 6,589,786 |
| 9 | 171 | RBASE_STO_PRO_D | RBASE - Storage-Production-Demand | 174,978 | 17,955,543 |
| 10 | 172 | RBASE_STO_TRA_D | RBASE - Storage-Transmission-Demand | 46,643 | 5,058,185 |
| 11 | 173 | RBASE_STO_DIS_DSUB | RBASE - Storage-Distribution-Demand-Subs | 28,019 | 1,080,922 |
| 12 | 174 | RBASE_STO_DIS_DPRI | RBASE - Storage-Distribution-Demand-Primary | 69,231 | 2,670,769 |
| 13 | 175 | RBASE_STO_DIS_DSEC | RBASE - Storage-Distribution-Demand-Secondary | - | - |
| 14 | 176 | RBASE_TRAD | RBASE - Transmission-Demand | 425,829 | 46,178,615 |
| 15 | 177 | RBASE_DISDSUB | RBASE - Distribution-Demand-Subs | 802,229 | 30,948,314 |
| 16 | 178 | RBASE_DISDPRI | RBASE - Distribution-Demand-Primary | 1,988,487 | 76,711,658 |
| 17 | 179 | RBASE_DISDSEC | RBASE - Distribution-Demand-Secondary | 914,708 | - |
| 18 | 180 | RBASE_DISCSRV | RBASE - Distribution-Customer-Services | - | - |
| 19 | 181 | RBASE_DISCMTR | RBASE - Distribution-Customer-Meters | 44,293 | 1,619,254 |
| 20 | 182 | RBASE_DISCMTRR | RBASE - Distribution-Customer-Meter Reading | 897 | 6,328 |
| 21 | 183 | RBASE_DISCBIL | RBASE - Distribution-Customer-Billing & Collections | 1,324 | 9,344 |
| 22 | 184 | RBASE_DISCINF | RBASE - Distribution-Customer-Service & Info | - | - |
| 23 | 185 | RBASE_DISCOTH | RBASE - Distribution-Customer-Other | 5,228 | 709,625 |
| 24 | 186 | | | | |
| 25 | 187 | | | | |
| 26 | 188 | TOTAL_O&M_PROD | Total O&M Expense - Production-Demand | 110,875 | 11,377,549 |
| 27 | 189 | TOTAL_O&M_PROEF | Total O&M Expense - Production-Energy-Fuel | - | - |
| 28 | 190 | TOTAL_O&M_PROENF | Total O&M Expense - Production-Energy-Non-Fuel | 33,243 | 3,333,884 |
| 29 | 191 | TOTAL_O&M_STO_PRO_D | Total O&M Expense - Storage-Production-Demand | 60,804 | 6,239,498 |
| 30 | 192 | TOTAL_O&M_STO_TRA_D | Total O&M Expense - Storage-Transmission-Demand | 47,469 | 5,147,724 |
| 31 | 193 | TOTAL_O&M_STO_DIS_DSUB | Total O&M Expense - Storage-Distribution-Demand-Subs | 89 | 3,439 |
| 32 | 194 | TOTAL_O&M_STO_DIS_DPRI | Total O&M Expense - Storage-Distribution-Demand-Primary | 220 | 8,497 |
| 33 | 195 | TOTAL_O&M_STO_DIS_DSEC | Total O&M Expense - Storage-Distribution-Demand-Secondary | - | - |
| 34 | 196 | TOTAL_O&M_TRAD | Total O&M Expense - Transmission-Demand | 40,405 | 4,381,663 |
| 35 | 197 | TOTAL_O&M_DISDSUB | Total O&M Expense - Distribution-Demand-Subs | 34,471 | 1,329,829 |
| 36 | 198 | TOTAL_O&M_DISDPRI | Total O&M Expense - Distribution-Demand-Primary | 97,427 | 3,758,530 |
| 37 | 199 | TOTAL_O&M_DISDSEC | Total O&M Expense - Distribution-Demand-Secondary | 44,817 | - |
| 38 | 200 | TOTAL_O&M_DISCSRV | Total O&M Expense - Distribution-Customer-Services | - | - |
| 39 | 201 | TOTAL_O&M_DISCMTR | Total O&M Expense - Distribution-Customer-Meters | 10,583 | 386,886 |
| 40 | 202 | TOTAL_O&M_DISCMTRR | Total O&M Expense - Distribution-Customer-Meter Reading | 665 | 4,690 |

This schedule is sponsored by PNM Witness Larkin

**PUBLIC SERVICE OF NEW MEXICO**
**Test Period Ending September 30th, 2028**

| Class_Factors Line No. | Factor No. | | | Schedule 5 Industrial Power | Schedule 10 Irrigation |
|---|---|---|---|---|---|
| 2 | 110 | LA_DISCMTRR | Labor - Distribution-Customer-Meter Reading | - | 2,413 |
| 3 | 111 | LA_DISCBIL | Labor - Distribution-Customer-Billing & Collections | - | 3,563 |
| 4 | 112 | LA_DISCINF | Labor - Distribution-Customer-Service & Info | - | - |
| 5 | 113 | LA_DISCOTH | Labor - Distribution-Customer-Other | - | 6,449 |
| 6 | 168 | RBASE_PROD | RBASE - Production-Demand | - | 2,567,479 |
| 7 | 169 | RBASE_PROEF | RBASE - Production-Energy-Fuel | - | - |
| 8 | 170 | RBASE_PROENF | RBASE - Production-Energy-Non-Fuel | - | 162,173 |
| 9 | 171 | RBASE_STO_PRO_D | RBASE - Storage-Production-Demand | - | 475,481 |
| 10 | 172 | RBASE_STO_TRA_D | RBASE - Storage-Transmission-Demand | - | 120,558 |
| 11 | 173 | RBASE_STO_DIS_DSUB | RBASE - Storage-Distribution-Demand-Subs | - | 43,030 |
| 12 | 174 | RBASE_STO_DIS_DPRI | RBASE - Storage-Distribution-Demand-Primary | - | 106,320 |
| 13 | 175 | RBASE_STO_DIS_DSEC | RBASE - Storage-Distribution-Demand-Secondary | - | - |
| 14 | 176 | RBASE_TRAD | RBASE - Transmission-Demand | - | 1,100,635 |
| 15 | 177 | RBASE_DISDSUB | RBASE - Distribution-Demand-Subs | - | 1,232,012 |
| 16 | 178 | RBASE_DISDPRI | RBASE - Distribution-Demand-Primary | - | 3,053,792 |
| 17 | 179 | RBASE_DISDSEC | RBASE - Distribution-Demand-Secondary | - | 1,404,750 |
| 18 | 180 | RBASE_DISCSRV | RBASE - Distribution-Customer-Services | - | - |
| 19 | 181 | RBASE_DISCMTR | RBASE - Distribution-Customer-Meters | - | 621,284 |
| 20 | 182 | RBASE_DISCMTRR | RBASE - Distribution-Customer-Meter Reading | - | 12,577 |
| 21 | 183 | RBASE_DISCBIL | RBASE - Distribution-Customer-Billing & Collections | - | 18,571 |
| 22 | 184 | RBASE_DISCINF | RBASE - Distribution-Customer-Service & Info | - | - |
| 23 | 185 | RBASE_DISCOTH | RBASE - Distribution-Customer-Other | - | 33,152 |
| 24 | 186 | | | | |
| 25 | 187 | | | | |
| 26 | 188 | TOTAL_O&M_PROD | Total O&M Expense - Production-Demand | - | 301,289 |
| 27 | 189 | TOTAL_O&M_PROEF | Total O&M Expense - Production-Energy-Fuel | - | - |
| 28 | 190 | TOTAL_O&M_PROENF | Total O&M Expense - Production-Energy-Non-Fuel | - | 82,046 |
| 29 | 191 | TOTAL_O&M_STO_PRO_D | Total O&M Expense - Storage-Production-Demand | - | 165,228 |
| 30 | 192 | TOTAL_O&M_STO_TRA_D | Total O&M Expense - Storage-Transmission-Demand | - | 122,692 |
| 31 | 193 | TOTAL_O&M_STO_DIS_DSUB | Total O&M Expense - Storage-Distribution-Demand-Subs | - | 137 |
| 32 | 194 | TOTAL_O&M_STO_DIS_DPRI | Total O&M Expense - Storage-Distribution-Demand-Primary | - | 338 |
| 33 | 195 | TOTAL_O&M_STO_DIS_DSEC | Total O&M Expense - Storage-Distribution-Demand-Secondary | - | - |
| 34 | 196 | TOTAL_O&M_TRAD | Total O&M Expense - Transmission-Demand | - | 104,434 |
| 35 | 197 | TOTAL_O&M_DISDSUB | Total O&M Expense - Distribution-Demand-Subs | - | 52,939 |
| 36 | 198 | TOTAL_O&M_DISDPRI | Total O&M Expense - Distribution-Demand-Primary | - | 149,622 |
| 37 | 199 | TOTAL_O&M_DISDSEC | Total O&M Expense - Distribution-Demand-Secondary | - | 68,827 |
| 38 | 200 | TOTAL_O&M_DISCSRV | Total O&M Expense - Distribution-Customer-Services | - | - |
| 39 | 201 | TOTAL_O&M_DISCMTR | Total O&M Expense - Distribution-Customer-Meters | - | 148,442 |
| 40 | 202 | TOTAL_O&M_DISCMTRR | Total O&M Expense - Distribution-Customer-Meter Reading | - | 9,321 |

This schedule is sponsored by PNM Witness Larkin

**PUBLIC SERVICE OF NEW MEXICO**
**Test Period Ending September 30th, 2028**

| Class_Factors Line No. | Factor No. | | | Schedule 11 Water & Sewage | Schedule 15 Industrial Power |
|---|---|---|---|---|---|
| 2 | 110 | LA_DISCMTRR | Labor - Distribution-Customer-Meter Reading | 877 | 7.65 |
| 3 | 111 | LA_DISCBIL | Labor - Distribution-Customer-Billing & Collections | 1,296 | 11.29 |
| 4 | 112 | LA_DISCINF | Labor - Distribution-Customer-Service & Info | - | - |
| 5 | 113 | LA_DISCOTH | Labor - Distribution-Customer-Other | 24,082 | 10,085.90 |
| 6 | 168 | RBASE_PROD | RBASE - Production-Demand | 7,474,701 | 5,736,790.81 |
| 7 | 169 | RBASE_PROEF | RBASE - Production-Energy-Fuel | - | - |
| 8 | 170 | RBASE_PROENF | RBASE - Production-Energy-Non-Fuel | 1,102,108 | 483,559.21 |
| 9 | 171 | RBASE_STO_PRO_D | RBASE - Storage-Production-Demand | 1,384,266 | 1,062,416.67 |
| 10 | 172 | RBASE_STO_TRA_D | RBASE - Storage-Transmission-Demand | 473,004 | 303,319.39 |
| 11 | 173 | RBASE_STO_DIS_DSUB | RBASE - Storage-Distribution-Demand-Subs | 276,234 | - |
| 12 | 174 | RBASE_STO_DIS_DPRI | RBASE - Storage-Distribution-Demand-Primary | 682,525 | - |
| 13 | 175 | RBASE_STO_DIS_DSEC | RBASE - Storage-Distribution-Demand-Secondary | - | - |
| 14 | 176 | RBASE_TRAD | RBASE - Transmission-Demand | 4,318,286 | 2,769,149.44 |
| 15 | 177 | RBASE_DISDSUB | RBASE - Distribution-Demand-Subs | 7,908,955 | - |
| 16 | 178 | RBASE_DISDPRI | RBASE - Distribution-Demand-Primary | 19,603,946 | - |
| 17 | 179 | RBASE_DISDSEC | RBASE - Distribution-Demand-Secondary | - | - |
| 18 | 180 | RBASE_DISCSRV | RBASE - Distribution-Customer-Services | - | - |
| 19 | 181 | RBASE_DISCMTR | RBASE - Distribution-Customer-Meters | 1,170,191 | 10,197.74 |
| 20 | 182 | RBASE_DISCMTRR | RBASE - Distribution-Customer-Meter Reading | 4,573 | 39.85 |
| 21 | 183 | RBASE_DISCBIL | RBASE - Distribution-Customer-Billing & Collections | 6,753 | 58.85 |
| 22 | 184 | RBASE_DISCINF | RBASE - Distribution-Customer-Service & Info | - | - |
| 23 | 185 | RBASE_DISCOTH | RBASE - Distribution-Customer-Other | 123,121 | 51,536.23 |
| 24 | 186 | | | | |
| 25 | 187 | | | | |
| 26 | 188 | TOTAL_O&M_PROD | Total O&M Expense - Production-Demand | 877,142 | 673,201.47 |
| 27 | 189 | TOTAL_O&M_PROEF | Total O&M Expense - Production-Energy-Fuel | - | - |
| 28 | 190 | TOTAL_O&M_PROENF | Total O&M Expense - Production-Energy-Non-Fuel | 557,575 | 244,640.79 |
| 29 | 191 | TOTAL_O&M_STO_PRO_D | Total O&M Expense - Storage-Production-Demand | 481,029 | 369,186.68 |
| 30 | 192 | TOTAL_O&M_STO_TRA_D | Total O&M Expense - Storage-Transmission-Demand | 481,377 | 308,688.71 |
| 31 | 193 | TOTAL_O&M_STO_DIS_DSUB | Total O&M Expense - Storage-Distribution-Demand-Subs | 879 | - |
| 32 | 194 | TOTAL_O&M_STO_DIS_DPRI | Total O&M Expense - Storage-Distribution-Demand-Primary | 2,171 | - |
| 33 | 195 | TOTAL_O&M_STO_DIS_DSEC | Total O&M Expense - Storage-Distribution-Demand-Secondary | - | - |
| 34 | 196 | TOTAL_O&M_TRAD | Total O&M Expense - Transmission-Demand | 409,741 | 262,751.04 |
| 35 | 197 | TOTAL_O&M_DISDSUB | Total O&M Expense - Distribution-Demand-Subs | 339,843 | - |
| 36 | 198 | TOTAL_O&M_DISDPRI | Total O&M Expense - Distribution-Demand-Primary | 960,506 | - |
| 37 | 199 | TOTAL_O&M_DISDSEC | Total O&M Expense - Distribution-Demand-Secondary | - | - |
| 38 | 200 | TOTAL_O&M_DISCSRV | Total O&M Expense - Distribution-Customer-Services | - | - |
| 39 | 201 | TOTAL_O&M_DISCMTR | Total O&M Expense - Distribution-Customer-Meters | 279,592 | 2,436.53 |
| 40 | 202 | TOTAL_O&M_DISCMTRR | Total O&M Expense - Distribution-Customer-Meter Reading | 3,389 | 29.54 |

This schedule is sponsored by PNM Witness Larkin

**PUBLIC SERVICE OF NEW MEXICO**
**Test Period Ending September 30th, 2028**

| Class_Factors Line No. | Factor No. | | | Schedule 30 Industrial Power | Schedule 33B Large Service |
|---|---|---|---|---|---|
| 2 | 110 | LA_DISCMTRR | Labor - Distribution-Customer-Meter Reading | 8 | 76 |
| 3 | 111 | LA_DISCBIL | Labor - Distribution-Customer-Billing & Collections | 11 | 113 |
| 4 | 112 | LA_DISCINF | Labor - Distribution-Customer-Service & Info | - | - |
| 5 | 113 | LA_DISCOTH | Labor - Distribution-Customer-Other | 100,187 | 1,954 |
| 6 | 168 | RBASE_PROD | RBASE - Production-Demand | 59,132,307 | 733,199 |
| 7 | 169 | RBASE_PROEF | RBASE - Production-Energy-Fuel | - | - |
| 8 | 170 | RBASE_PROENF | RBASE - Production-Energy-Non-Fuel | 4,807,535 | 89,120 |
| 9 | 171 | RBASE_STO_PRO_D | RBASE - Storage-Production-Demand | 10,950,922 | 135,784 |
| 10 | 172 | RBASE_STO_TRA_D | RBASE - Storage-Transmission-Demand | 3,117,199 | 45,311 |
| 11 | 173 | RBASE_STO_DIS_DSUB | RBASE - Storage-Distribution-Demand-Subs | 574,601 | - |
| 12 | 174 | RBASE_STO_DIS_DPRI | RBASE - Storage-Distribution-Demand-Primary | - | - |
| 13 | 175 | RBASE_STO_DIS_DSEC | RBASE - Storage-Distribution-Demand-Secondary | - | - |
| 14 | 176 | RBASE_TRAD | RBASE - Transmission-Demand | 28,458,417 | 413,663 |
| 15 | 177 | RBASE_DISDSUB | RBASE - Distribution-Demand-Subs | 16,451,625 | - |
| 16 | 178 | RBASE_DISDPRI | RBASE - Distribution-Demand-Primary | - | - |
| 17 | 179 | RBASE_DISDSEC | RBASE - Distribution-Demand-Secondary | - | - |
| 18 | 180 | RBASE_DISCSRV | RBASE - Distribution-Customer-Services | - | - |
| 19 | 181 | RBASE_DISCMTR | RBASE - Distribution-Customer-Meters | 10,198 | 101,977 |
| 20 | 182 | RBASE_DISCMTRR | RBASE - Distribution-Customer-Meter Reading | 40 | 399 |
| 21 | 183 | RBASE_DISCBIL | RBASE - Distribution-Customer-Billing & Collections | 59 | 588 |
| 22 | 184 | RBASE_DISCINF | RBASE - Distribution-Customer-Service & Info | - | - |
| 23 | 185 | RBASE_DISCOTH | RBASE - Distribution-Customer-Other | 511,922 | 9,992 |
| 24 | 186 | | | | |
| 25 | 187 | | | | |
| 26 | 188 | TOTAL_O&M_PROD | Total O&M Expense - Production-Demand | 6,939,064 | 86,040 |
| 27 | 189 | TOTAL_O&M_PROEF | Total O&M Expense - Production-Energy-Fuel | - | - |
| 28 | 190 | TOTAL_O&M_PROENF | Total O&M Expense - Production-Energy-Non-Fuel | 2,432,213 | 45,087 |
| 29 | 191 | TOTAL_O&M_STO_PRO_D | Total O&M Expense - Storage-Production-Demand | 3,805,413 | 47,184 |
| 30 | 192 | TOTAL_O&M_STO_TRA_D | Total O&M Expense - Storage-Transmission-Demand | 3,172,379 | 46,113 |
| 31 | 193 | TOTAL_O&M_STO_DIS_DSUB | Total O&M Expense - Storage-Distribution-Demand-Subs | 1,828 | - |
| 32 | 194 | TOTAL_O&M_STO_DIS_DPRI | Total O&M Expense - Storage-Distribution-Demand-Primary | - | - |
| 33 | 195 | TOTAL_O&M_STO_DIS_DSEC | Total O&M Expense - Storage-Distribution-Demand-Secondary | - | - |
| 34 | 196 | TOTAL_O&M_TRAD | Total O&M Expense - Transmission-Demand | 2,700,280 | 39,250 |
| 35 | 197 | TOTAL_O&M_DISDSUB | Total O&M Expense - Distribution-Demand-Subs | 706,916 | - |
| 36 | 198 | TOTAL_O&M_DISDPRI | Total O&M Expense - Distribution-Demand-Primary | - | - |
| 37 | 199 | TOTAL_O&M_DISDSEC | Total O&M Expense - Distribution-Demand-Secondary | - | - |
| 38 | 200 | TOTAL_O&M_DISCSRV | Total O&M Expense - Distribution-Customer-Services | - | - |
| 39 | 201 | TOTAL_O&M_DISCMTR | Total O&M Expense - Distribution-Customer-Meters | 2,437 | 24,365 |
| 40 | 202 | TOTAL_O&M_DISCMTRR | Total O&M Expense - Distribution-Customer-Meter Reading | 30 | 295 |

This schedule is sponsored by PNM Witness Larkin

**PUBLIC SERVICE OF NEW MEXICO**
**Test Period Ending September 30th, 2028**

| Class_Factors Line No. | Factor No. | | | Schedule 35B Lg Power Service | Schedule 36B Special Service Rate |
|---|---|---|---|---|---|
| 2 | 110 | LA_DISCMTRR | Labor - Distribution-Customer-Meter Reading | 38 | 8 |
| 3 | 111 | LA_DISCBIL | Labor - Distribution-Customer-Billing & Collections | 56 | 11 |
| 4 | 112 | LA_DISCINF | Labor - Distribution-Customer-Service & Info | - | - |
| 5 | 113 | LA_DISCOTH | Labor - Distribution-Customer-Other | 41,871 | 203,205 |
| 6 | 168 | RBASE_PROD | RBASE - Production-Demand | 24,883,266 | - |
| 7 | 169 | RBASE_PROEF | RBASE - Production-Energy-Fuel | - | - |
| 8 | 170 | RBASE_PROENF | RBASE - Production-Energy-Non-Fuel | 2,007,064 | 9,751,429 |
| 9 | 171 | RBASE_STO_PRO_D | RBASE - Storage-Production-Demand | 4,608,221 | - |
| 10 | 172 | RBASE_STO_TRA_D | RBASE - Storage-Transmission-Demand | 1,298,593 | 16,122,454 |
| 11 | 173 | RBASE_STO_DIS_DSUB | RBASE - Storage-Distribution-Demand-Subs | 266,860 | - |
| 12 | 174 | RBASE_STO_DIS_DPRI | RBASE - Storage-Distribution-Demand-Primary | - | - |
| 13 | 175 | RBASE_STO_DIS_DSEC | RBASE - Storage-Distribution-Demand-Secondary | - | - |
| 14 | 176 | RBASE_TRAD | RBASE - Transmission-Demand | 11,855,484 | 147,189,686 |
| 15 | 177 | RBASE_DISDSUB | RBASE - Distribution-Demand-Subs | 7,640,588 | - |
| 16 | 178 | RBASE_DISDPRI | RBASE - Distribution-Demand-Primary | - | - |
| 17 | 179 | RBASE_DISDSEC | RBASE - Distribution-Demand-Secondary | - | - |
| 18 | 180 | RBASE_DISCSRV | RBASE - Distribution-Customer-Services | - | - |
| 19 | 181 | RBASE_DISCMTR | RBASE - Distribution-Customer-Meters | 50,989 | 10,198 |
| 20 | 182 | RBASE_DISCMTRR | RBASE - Distribution-Customer-Meter Reading | 199 | 40 |
| 21 | 183 | RBASE_DISCBIL | RBASE - Distribution-Customer-Billing & Collections | 294 | 59 |
| 22 | 184 | RBASE_DISCINF | RBASE - Distribution-Customer-Service & Info | - | - |
| 23 | 185 | RBASE_DISCOTH | RBASE - Distribution-Customer-Other | 213,949 | 1,038,312 |
| 24 | 186 | | | | |
| 25 | 187 | | | | |
| 26 | 188 | TOTAL_O&M_PROD | Total O&M Expense - Production-Demand | 2,920,004 | - |
| 27 | 189 | TOTAL_O&M_PROEF | Total O&M Expense - Production-Energy-Fuel | - | - |
| 28 | 190 | TOTAL_O&M_PROENF | Total O&M Expense - Production-Energy-Non-Fuel | 1,015,408 | 4,933,413 |
| 29 | 191 | TOTAL_O&M_STO_PRO_D | Total O&M Expense - Storage-Production-Demand | 1,601,343 | - |
| 30 | 192 | TOTAL_O&M_STO_TRA_D | Total O&M Expense - Storage-Transmission-Demand | 1,321,581 | 16,407,852 |
| 31 | 193 | TOTAL_O&M_STO_DIS_DSUB | Total O&M Expense - Storage-Distribution-Demand-Subs | 849 | - |
| 32 | 194 | TOTAL_O&M_STO_DIS_DPRI | Total O&M Expense - Storage-Distribution-Demand-Primary | - | - |
| 33 | 195 | TOTAL_O&M_STO_DIS_DSEC | Total O&M Expense - Storage-Distribution-Demand-Secondary | - | - |
| 34 | 196 | TOTAL_O&M_TRAD | Total O&M Expense - Transmission-Demand | 1,124,909 | 13,966,109 |
| 35 | 197 | TOTAL_O&M_DISDSUB | Total O&M Expense - Distribution-Demand-Subs | 328,311 | - |
| 36 | 198 | TOTAL_O&M_DISDPRI | Total O&M Expense - Distribution-Demand-Primary | - | - |
| 37 | 199 | TOTAL_O&M_DISDSEC | Total O&M Expense - Distribution-Demand-Secondary | - | - |
| 38 | 200 | TOTAL_O&M_DISCSRV | Total O&M Expense - Distribution-Customer-Services | - | - |
| 39 | 201 | TOTAL_O&M_DISCMTR | Total O&M Expense - Distribution-Customer-Meters | 12,183 | 2,437 |
| 40 | 202 | TOTAL_O&M_DISCMTRR | Total O&M Expense - Distribution-Customer-Meter Reading | 148 | 30 |

This schedule is sponsored by PNM Witness Larkin

**PUBLIC SERVICE OF NEW MEXICO**
**Test Period Ending September 30th, 2028**

| Class_Factors Line No. | Factor No. | | | Schedule 6 Priv. Area Light | Schedule 20 Streetlighting |
|---|---|---|---|---|---|
| 2 | 110 | LA_DISCMTRR | Labor - Distribution-Customer-Meter Reading | - | - |
| 3 | 111 | LA_DISCBIL | Labor - Distribution-Customer-Billing & Collections | - | - |
| 4 | 112 | LA_DISCINF | Labor - Distribution-Customer-Service & Info | - | - |
| 5 | 113 | LA_DISCOTH | Labor - Distribution-Customer-Other | 32,694 | 139,346 |
| 6 | 168 | RBASE_PROD | RBASE - Production-Demand | 372,744 | 429,463 |
| 7 | 169 | RBASE_PROEF | RBASE - Production-Energy-Fuel | - | - |
| 8 | 170 | RBASE_PROENF | RBASE - Production-Energy-Non-Fuel | 75,331 | 86,196 |
| 9 | 171 | RBASE_STO_PRO_D | RBASE - Storage-Production-Demand | 69,030 | 79,534 |
| 10 | 172 | RBASE_STO_TRA_D | RBASE - Storage-Transmission-Demand | 61,208 | 93,790 |
| 11 | 173 | RBASE_STO_DIS_DSUB | RBASE - Storage-Distribution-Demand-Subs | 25,385 | 29,638 |
| 12 | 174 | RBASE_STO_DIS_DPRI | RBASE - Storage-Distribution-Demand-Primary | 62,723 | 73,231 |
| 13 | 175 | RBASE_STO_DIS_DSEC | RBASE - Storage-Distribution-Demand-Secondary | - | - |
| 14 | 176 | RBASE_TRAD | RBASE - Transmission-Demand | 558,794 | 856,257 |
| 15 | 177 | RBASE_DISDSUB | RBASE - Distribution-Demand-Subs | 726,820 | 848,587 |
| 16 | 178 | RBASE_DISDPRI | RBASE - Distribution-Demand-Primary | 1,801,570 | 2,103,394 |
| 17 | 179 | RBASE_DISDSEC | RBASE - Distribution-Demand-Secondary | 828,726 | 967,565 |
| 18 | 180 | RBASE_DISCSRV | RBASE - Distribution-Customer-Services | - | - |
| 19 | 181 | RBASE_DISCMTR | RBASE - Distribution-Customer-Meters | - | - |
| 20 | 182 | RBASE_DISCMTRR | RBASE - Distribution-Customer-Meter Reading | - | - |
| 21 | 183 | RBASE_DISCBIL | RBASE - Distribution-Customer-Billing & Collections | - | - |
| 22 | 184 | RBASE_DISCINF | RBASE - Distribution-Customer-Service & Info | - | - |
| 23 | 185 | RBASE_DISCOTH | RBASE - Distribution-Customer-Other | 387,496 | 24,667,631 |
| 24 | 186 | | | | |
| 25 | 187 | | | | |
| 26 | 188 | TOTAL_O&M_PROD | Total O&M Expense - Production-Demand | 43,741 | 50,397 |
| 27 | 189 | TOTAL_O&M_PROEF | Total O&M Expense - Production-Energy-Fuel | - | - |
| 28 | 190 | TOTAL_O&M_PROENF | Total O&M Expense - Production-Energy-Non-Fuel | 38,111 | 43,608 |
| 29 | 191 | TOTAL_O&M_STO_PRO_D | Total O&M Expense - Storage-Production-Demand | 23,988 | 27,638 |
| 30 | 192 | TOTAL_O&M_STO_TRA_D | Total O&M Expense - Storage-Transmission-Demand | 62,291 | 95,451 |
| 31 | 193 | TOTAL_O&M_STO_DIS_DSUB | Total O&M Expense - Storage-Distribution-Demand-Subs | 81 | 94 |
| 32 | 194 | TOTAL_O&M_STO_DIS_DPRI | Total O&M Expense - Storage-Distribution-Demand-Primary | 200 | 233 |
| 33 | 195 | TOTAL_O&M_STO_DIS_DSEC | Total O&M Expense - Storage-Distribution-Demand-Secondary | - | - |
| 34 | 196 | TOTAL_O&M_TRAD | Total O&M Expense - Transmission-Demand | 53,021 | 81,246 |
| 35 | 197 | TOTAL_O&M_DISDSUB | Total O&M Expense - Distribution-Demand-Subs | 31,231 | 36,463 |
| 36 | 198 | TOTAL_O&M_DISDPRI | Total O&M Expense - Distribution-Demand-Primary | 88,269 | 103,057 |
| 37 | 199 | TOTAL_O&M_DISDSEC | Total O&M Expense - Distribution-Demand-Secondary | 40,604 | 47,406 |
| 38 | 200 | TOTAL_O&M_DISCSRV | Total O&M Expense - Distribution-Customer-Services | - | - |
| 39 | 201 | TOTAL_O&M_DISCMTR | Total O&M Expense - Distribution-Customer-Meters | - | - |
| 40 | 202 | TOTAL_O&M_DISCMTRR | Total O&M Expense - Distribution-Customer-Meter Reading | - | - |

This schedule is sponsored by PNM Witness Larkin

**PUBLIC SERVICE OF NEW MEXICO**
**Test Period Ending September 30th, 2028**

| Line No. | Factor No. | Class_Factors | | dule 20-Customer O<br>Streetlighting |
|---|---|---|---|---|
| 2 | 110 | LA_DISCMTRR | Labor - Distribution-Customer-Meter Reading | - |
| 3 | 111 | LA_DISCBIL | Labor - Distribution-Customer-Billing & Collections | - |
| 4 | 112 | LA_DISCINF | Labor - Distribution-Customer-Service & Info | - |
| 5 | 113 | LA_DISCOTH | Labor - Distribution-Customer-Other | 2,407 |
| 6 | 168 | RBASE_PROD | RBASE - Production-Demand | 575,491 |
| 7 | 169 | RBASE_PROEF | RBASE - Production-Energy-Fuel | - |
| 8 | 170 | RBASE_PROENF | RBASE - Production-Energy-Non-Fuel | 115,505 |
| 9 | 171 | RBASE_STO_PRO_D | RBASE - Storage-Production-Demand | 106,577 |
| 10 | 172 | RBASE_STO_TRA_D | RBASE - Storage-Transmission-Demand | 69,991 |
| 11 | 173 | RBASE_STO_DIS_DSUB | RBASE - Storage-Distribution-Demand-Subs | 39,716 |
| 12 | 174 | RBASE_STO_DIS_DPRI | RBASE - Storage-Distribution-Demand-Primary | 98,132 |
| 13 | 175 | RBASE_STO_DIS_DSEC | RBASE - Storage-Distribution-Demand-Secondary | - |
| 14 | 176 | RBASE_TRAD | RBASE - Transmission-Demand | 638,985 |
| 15 | 177 | RBASE_DISDSUB | RBASE - Distribution-Demand-Subs | 1,137,128 |
| 16 | 178 | RBASE_DISDPRI | RBASE - Distribution-Demand-Primary | 2,818,603 |
| 17 | 179 | RBASE_DISDSEC | RBASE - Distribution-Demand-Secondary | 1,296,563 |
| 18 | 180 | RBASE_DISCSRV | RBASE - Distribution-Customer-Services | - |
| 19 | 181 | RBASE_DISCMTR | RBASE - Distribution-Customer-Meters | - |
| 20 | 182 | RBASE_DISCMTRR | RBASE - Distribution-Customer-Meter Reading | - |
| 21 | 183 | RBASE_DISCBIL | RBASE - Distribution-Customer-Billing & Collections | - |
| 22 | 184 | RBASE_DISCINF | RBASE - Distribution-Customer-Service & Info | - |
| 23 | 185 | RBASE_DISCOTH | RBASE - Distribution-Customer-Other | 12,298 |
| 24 | 186 | | | |
| 25 | 187 | | | |
| 26 | 188 | TOTAL_O&M_PROD | Total O&M Expense - Production-Demand | 67,533 |
| 27 | 189 | TOTAL_O&M_PROEF | Total O&M Expense - Production-Energy-Fuel | - |
| 28 | 190 | TOTAL_O&M_PROENF | Total O&M Expense - Production-Energy-Non-Fuel | 58,436 |
| 29 | 191 | TOTAL_O&M_STO_PRO_D | Total O&M Expense - Storage-Production-Demand | 37,035 |
| 30 | 192 | TOTAL_O&M_STO_TRA_D | Total O&M Expense - Storage-Transmission-Demand | 71,230 |
| 31 | 193 | TOTAL_O&M_STO_DIS_DSUB | Total O&M Expense - Storage-Distribution-Demand-Subs | 126 |
| 32 | 194 | TOTAL_O&M_STO_DIS_DPRI | Total O&M Expense - Storage-Distribution-Demand-Primary | 312 |
| 33 | 195 | TOTAL_O&M_STO_DIS_DSEC | Total O&M Expense - Storage-Distribution-Demand-Secondary | - |
| 34 | 196 | TOTAL_O&M_TRAD | Total O&M Expense - Transmission-Demand | 60,630 |
| 35 | 197 | TOTAL_O&M_DISDSUB | Total O&M Expense - Distribution-Demand-Subs | 48,862 |
| 36 | 198 | TOTAL_O&M_DISDPRI | Total O&M Expense - Distribution-Demand-Primary | 138,099 |
| 37 | 199 | TOTAL_O&M_DISDSEC | Total O&M Expense - Distribution-Demand-Secondary | 63,526 |
| 38 | 200 | TOTAL_O&M_DISCSRV | Total O&M Expense - Distribution-Customer-Services | - |
| 39 | 201 | TOTAL_O&M_DISCMTR | Total O&M Expense - Distribution-Customer-Meters | - |
| 40 | 202 | TOTAL_O&M_DISCMTRR | Total O&M Expense - Distribution-Customer-Meter Reading | - |

This schedule is sponsored by PNM Witness Larkin

**PUBLIC SERVICE OF NEW MEXICO**
**Test Period Ending September 30th, 2028**

Class_Factors

| Line No. | Factor No. | | | Other Input |
|---|---|---|---|---|
| 41 | 203 | TOTAL_O&M_DISCBIL | Total O&M Expense - Distribution-Customer-Billing & Collections | |
| 42 | 204 | TOTAL_O&M_DISCINF | Total O&M Expense - Distribution-Customer-Service & Info | |
| 43 | 205 | TOTAL_O&M_DISCOTH | Total O&M Expense - Distribution-Customer-Other | |

This schedule is sponsored by PNM Witness Larkin

**PUBLIC SERVICE OF NEW MEXICO**
**Test Period Ending September 30th, 2028**

Class_Factors

Schedule 1

| Line No. | Factor No. | | | PNM Retail | Residential |
|---|---|---|---|---|---|
| 41 | 203 | TOTAL_O&M_DISCBIL | Total O&M Expense - Distribution-Customer-Billing & Collections | 31,323,432 | 27,419,607 |
| 42 | 204 | TOTAL_O&M_DISCINF | Total O&M Expense - Distribution-Customer-Service & Info | - | - |
| 43 | 205 | TOTAL_O&M_DISCOTH | Total O&M Expense - Distribution-Customer-Other | 22,981,362 | 16,766,912 |

This schedule is sponsored by PNM Witness Larkin

**PUBLIC SERVICE OF NEW MEXICO**
**Test Period Ending September 30th, 2028**

| Class_Factors Line No. | Factor No. | | | Schedule 1B Residential | Schedule 2 Small Power |
|---|---|---|---|---|---|
| 41 | 203 | TOTAL_O&M_DISCBIL | Total O&M Expense - Distribution-Customer-Billing & Collections | 465,398 | 2,666,349 |
| 42 | 204 | TOTAL_O&M_DISCINF | Total O&M Expense - Distribution-Customer-Service & Info | - | - |
| 43 | 205 | TOTAL_O&M_DISCOTH | Total O&M Expense - Distribution-Customer-Other | 263,032 | 2,086,020 |

This schedule is sponsored by PNM Witness Larkin

**PUBLIC SERVICE OF NEW MEXICO**
**Test Period Ending September 30th, 2028**

| Class_Factors Line No. | Factor No. | | | Schedule 2B Small Power | Schedule 3B General Power |
|---|---|---|---|---|---|
| 41 | 203 | TOTAL_O&M_DISCBIL | Total O&M Expense - Distribution-Customer-Billing & Collections | 27,939 | 390,075 |
| 42 | 204 | TOTAL_O&M_DISCINF | Total O&M Expense - Distribution-Customer-Service & Info | - | - |
| 43 | 205 | TOTAL_O&M_DISCOTH | Total O&M Expense - Distribution-Customer-Other | 21,581 | 700,900 |

This schedule is sponsored by PNM Witness Larkin

**PUBLIC SERVICE OF NEW MEXICO**
**Test Period Ending September 30th, 2028**

| Class_Factors Line No. | Factor No. | | | Schedule 3C GP Low LF | Schedule 3D General Power Gov |
|---|---|---|---|---|---|
| 41 | 203 | TOTAL_O&M_DISCBIL | Total O&M Expense - Distribution-Customer-Billing & Collections | 136,301 | 25,979 |
| 42 | 204 | TOTAL_O&M_DISCINF | Total O&M Expense - Distribution-Customer-Service & Info | - | - |
| 43 | 205 | TOTAL_O&M_DISCOTH | Total O&M Expense - Distribution-Customer-Other | 193,429 | 52,017 |

This schedule is sponsored by PNM Witness Larkin

**PUBLIC SERVICE OF NEW MEXICO**
**Test Period Ending September 30th, 2028**

| Class_Factors Line No. | Factor No. | | | Schedule 3E GP Low LF Gov |
|---|---|---|---|---|
| 41 | 203 | TOTAL_O&M_DISCBIL | Total O&M Expense - Distribution-Customer-Billing & Collections | 8,174 |
| 42 | 204 | TOTAL_O&M_DISCINF | Total O&M Expense - Distribution-Customer-Service & Info | - |
| 43 | 205 | TOTAL_O&M_DISCOTH | Total O&M Expense - Distribution-Customer-Other | 12,094 |

This schedule is sponsored by PNM Witness Larkin

**PUBLIC SERVICE OF NEW MEXICO**
**Test Period Ending September 30th, 2028**

| Line No. | Class_Factors Factor No. | | | Schedule 3F GP Charging Stations | Schedule 4 Large Power |
|---|---|---|---|---|---|
| 41 | 203 | TOTAL_O&M_DISCBIL | Total O&M Expense - Distribution-Customer-Billing & Collections | 3,025 | 161,033 |
| 42 | 204 | TOTAL_O&M_DISCINF | Total O&M Expense - Distribution-Customer-Service & Info | - | - |
| 43 | 205 | TOTAL_O&M_DISCOTH | Total O&M Expense - Distribution-Customer-Other | 4,978 | 435,291 |

This schedule is sponsored by PNM Witness Larkin

**PUBLIC SERVICE OF NEW MEXICO**
**Test Period Ending September 30th, 2028**

| Class_Factors Line No. | Factor No. | | | Schedule 5 Industrial Power | Schedule 10 Irrigation |
|---|---|---|---|---|---|
| 41 | 203 | TOTAL_O&M_DISCBIL | Total O&M Expense - Distribution-Customer-Billing & Collections | - | 13,764 |
| 42 | 204 | TOTAL_O&M_DISCINF | Total O&M Expense - Distribution-Customer-Service & Info | - | - |
| 43 | 205 | TOTAL_O&M_DISCOTH | Total O&M Expense - Distribution-Customer-Other | - | 20,217 |

This schedule is sponsored by PNM Witness Larkin

**PUBLIC SERVICE OF NEW MEXICO**
**Test Period Ending September 30th, 2028**

| Class_Factors Line No. | Factor No. | | | Schedule 11 Water & Sewage | Schedule 15 Industrial Power |
|---|---|---|---|---|---|
| 41 | 203 | TOTAL_O&M_DISCBIL | Total O&M Expense - Distribution-Customer-Billing & Collections | 5,005 | 43.62 |
| 42 | 204 | TOTAL_O&M_DISCINF | Total O&M Expense - Distribution-Customer-Service & Info | - | - |
| 43 | 205 | TOTAL_O&M_DISCOTH | Total O&M Expense - Distribution-Customer-Other | 75,490 | 31,616.87 |

This schedule is sponsored by PNM Witness Larkin

**PUBLIC SERVICE OF NEW MEXICO**
**Test Period Ending September 30th, 2028**

| Class_Factors Line No. | Factor No. | | | Schedule 30 Industrial Power | Schedule 33B Large Service |
|---|---|---|---|---|---|
| 41 | 203 | TOTAL_O&M_DISCBIL | Total O&M Expense - Distribution-Customer-Billing & Collections | 44 | 436 |
| 42 | 204 | TOTAL_O&M_DISCINF | Total O&M Expense - Distribution-Customer-Service & Info | - | - |
| 43 | 205 | TOTAL_O&M_DISCOTH | Total O&M Expense - Distribution-Customer-Other | 314,062 | 6,126 |

This schedule is sponsored by PNM Witness Larkin

**PUBLIC SERVICE OF NEW MEXICO**
**Test Period Ending September 30th, 2028**

| Class_Factors Line No. | Factor No. | | | Schedule 35B Lg Power Service | Schedule 36B Special Service Rate |
|---|---|---|---|---|---|
| 41 | 203 | TOTAL_O&M_DISCBIL | Total O&M Expense - Distribution-Customer-Billing & Collections | 218 | 44 |
| 42 | 204 | TOTAL_O&M_DISCINF | Total O&M Expense - Distribution-Customer-Service & Info | - | - |
| 43 | 205 | TOTAL_O&M_DISCOTH | Total O&M Expense - Distribution-Customer-Other | 131,255 | 637,000 |

This schedule is sponsored by PNM Witness Larkin

**PUBLIC SERVICE OF NEW MEXICO**
**Test Period Ending September 30th, 2028**

| Class_Factors Line No. | Factor No. | | | Schedule 6 Priv. Area Light | Schedule 20 Streetlighting |
|---|---|---|---|---|---|
| 41 | 203 | TOTAL_O&M_DISCBIL | Total O&M Expense - Distribution-Customer-Billing & Collections | - | - |
| 42 | 204 | TOTAL_O&M_DISCINF | Total O&M Expense - Distribution-Customer-Service & Info | - | - |
| 43 | 205 | TOTAL_O&M_DISCOTH | Total O&M Expense - Distribution-Customer-Other | 256,960 | 964,835 |

This schedule is sponsored by PNM Witness Larkin

**PUBLIC SERVICE OF NEW MEXICO**
**Test Period Ending September 30th, 2028**

| Class_Factors Line No. | Factor No. | | | dule 20-Customer O' Streetlighting |
|---|---|---|---|---|
| 41 | 203 | TOTAL_O&M_DISCBIL | Total O&M Expense - Distribution-Customer-Billing & Collections | - |
| 42 | 204 | TOTAL_O&M_DISCINF | Total O&M Expense - Distribution-Customer-Service & Info | - |
| 43 | 205 | TOTAL_O&M_DISCOTH | Total O&M Expense - Distribution-Customer-Other | 7,545 |

This schedule is sponsored by PNM Witness Larkin

# PNM Schedule M-2

Classification factors used to assign items of plant and expenses to demand, energy, and customer

**Public Service Company of New Mexico**
**Schedule M-2 Classification Factors Used to Assign Items of Plant and Expenses to Demand, Energy and Customer**
Base Period Ending June 30, 2026
Test Period Ending September 30, 2028

| Line No. | | FERC Account | Functional Allocator Name | CLASSIFICATION DEMAND | ENERGY | CUSTOMER | Rationale |
|---|---|---|---|---|---|---|---|
| 1 | NET PRODUCTION PLANT | | | | | | |
| 2 | Steam Production Net Plant | 101/106 | PROD_D | X | | | Related to production operation of utility |
| 3 | Nuclear Production Net Plant - Palo Verde | 101/106 | PROD_D | X | | | Related to production operation of utility |
| 4 | Nuclear Production Net Plant - Acq Adj (Drexel) | 114 | PROD_D | X | | | Related to production operation of utility |
| 5 | Nuclear Production Net Plant - Acq Adj (First Chicago) | 114 | PROD_D | X | | | Related to production operation of utility |
| 6 | Other Production Plant - Gas & Solar | 101/106 | PROD_D | X | | | Related to production operation of utility |
| 7 | Other Production Plant - Renewable | 101/106 | PROD_D | X | | | Related to production operation of utility |
| 8 | TOTAL NET PRODUCTION PLANT | | | | | | |
| 9 | | | | | | | |
| 10 | NET PLANT BATTERY STORAGE | | | | | | |
| 11 | Transmission Sited Batteries | 101/106 | STORAGE_Trans_PNM | X | | | Related to operation of utility |
| 12 | Distribution Sited Batteries | 101/106 | STORAGE_Dist_PNM | X | | | Related to operation of utility |
| 13 | TOTAL BATTERY STORAGE NET PLANT | | | | | | |
| 14 | | | | | | | |
| 15 | NET TRANSMISSION PLANT | | | | | | |
| 16 | Step-Up Transformers & Generation Interconnections | 101/106 | TRAN_D | X | | | Related to transmission operation of utility |
| 17 | Transmission System Net Plant - Allocated | 101/106 | TRAN_D | X | | | Related to transmission operation of utility |
| 18 | Transmission System Net Plant - FERC Incremental Rates | 101/106 | TRAN_D | X | | | Related to transmission operation of utility |
| 19 | Transmission System Net Plant - Dedicated Retail | 101/106 | TRAN_D | X | | | Related to transmission operation of utility |
| 20 | Transmission System Net Plant - Acq Adj (EIP) | 114 | TRAN_D | X | | | Related to transmission operation of utility |
| 21 | TOTAL NET TRANSMISSION PLANT | | | | | | |
| 22 | | | | | | | |
| 23 | NET DISTRIBUTION PLANT | | | | | | |
| 24 | Distribution Substations Net Plant - PNM | 101/106 | DIST_D_SUBS | X | | | Related to distribution operation of utility |
| 25 | Distribution Substations Net Plant - Renewables | 101/106 | DIST_D_SUBS | X | | | Related to distribution operation of utility |
| 26 | Distribution Substations Net Plant - Grid Mod | 101/106 | DIST_D_SUBS | X | | | Related to distribution operation of utility |
| 27 | Primary Distribution System Net Plant - PNM | 101/106 | DIST_D_PRIM | X | | | Related to distribution operation of utility |
| 28 | Primary Distribution System Net Plant - Renewables | 101/106 | DIST_D_PRIM | X | | | Related to distribution operation of utility |
| 29 | Primary Distribution System Net Plant - Grid Mod | 101/106 | DIST_D_PRIM | X | | | Related to distribution operation of utility |
| 30 | Secondary Distribution System Net Plant - PNM | 101/106 | DIST_D_SEC | X | | | Related to distribution operation of utility |
| 31 | Secondary Distribution System Net Plant - Renewables | 101/106 | DIST_D_SEC | X | | | Related to distribution operation of utility |
| 32 | Secondary Distribution System Net Plant - Grid Mod | 101/106 | DIST_D_SEC | X | | | Related to distribution operation of utility |
| 33 | Services Net Plant - PNM | 101/106 | DIST_C_SERV | | | X | Related to production operation of utility |
| 34 | Meters Net Plant - PNM | 101/106 | DIST_C_METE | | | X | Required to serve customer |
| 35 | Meters Net Plant - Grid Mod | 101/106 | DIST_C_METE | | | X | Required to serve customer |
| 36 | Private Lighting - 371 | 101/106 | DIST_C_OTH | | | X | Required to serve customer |
| 37 | Street Lighting - 373 | 101/106 | DIST_C_OTH | | | X | Required to serve customer |
| 38 | TOTAL NET DISTRIBUTION PLANT | | | | | | |
| 39 | | | | | | | |
| 40 | NET GENERAL & INTANGIBLE PLANT | | | | | | |
| 41 | General & Intangible Net Plant | 101/106 | LA_TOTAL | X | | X | Related to operation of utility |
| 42 | Renewables General & Intangible Net Plant | 101/106 | LA_TOTAL | X | | X | Related to operation of utility |
| 43 | Grid Mod General & Intangible Net Plant | 101/106 | LA_TOTAL | X | | X | Related to operation of utility |
| 44 | Production Related (Shared Services) | 101/106 | LA_PROD | X | | | Related to production operation of utility |
| 45 | Transmission Related (Shared Services) | 101/106 | LA_TRAN | X | | | Related to transmission operation of utility |
| 46 | Distribution/Customer Related (Shared Services) | 101/106 | LA_DISTC | X | | X | Related to distribution operation of utility |
| 47 | TOTAL NET GENERAL & INTANGIBLE PLANT | | | | | | |

**Public Service Company of New Mexico**
**Schedule M-2 Classification Factors Used to Assign Items of Plant and Expenses to Demand, Energy and Customer**
Base Period Ending June 30, 2026
Test Period Ending September 30, 2028

| Line No. | | FERC Account | Functional Allocator Name | CLASSIFICATION DEMAND | ENERGY | CUSTOMER | Rationale |
|---|---|---|---|---|---|---|---|
| 48 | | | | | | | |
| 49 | TOTAL NET PLANT IN SERVICE | | | | | | |
| 50 | | | | | | | |
| 51 | ACCUMULATED DEFERRED INCOME TAXES | | | | | | |
| 52 | Federal Tax Credit Carryforward | 190 | NP_TOTAL | X | | X | Related to operation of utility |
| 53 | Net Operating Loss (NOL) | 190 | NP_TOTAL | X | | X | Related to operation of utility |
| 54 | Income Tax Regulatory Liability | 190 | RATEBASE_TOT | X | X | X | Related to operation of utility |
| 55 | Income Tax Regulatory Asset | 283 | RATEBASE_TOT | X | X | X | Related to operation of utility |
| 56 | Investment Tax Credit 2024 | 283 | NP_PROD | X | | | Related to operation of utility |
| 57 | Deferred Credits - Joint Use | 190 | NP_PROD | X | | | Related to operation of utility |
| 58 | Deferred Credits - Pathnet | 190 | NP_DIST | X | | X | Related to distribution operation of utility |
| 59 | Injury and Damages | 283 | LA_TOTAL | X | | X | Related to operation of utility |
| 60 | Plant - AFUDC | 283 | NP_TOTAL | X | | X | Related to operation of utility |
| 61 | Plant - Capitalized Interest | 283 | NP_TOTAL | X | | X | Related to operation of utility |
| 62 | PVNGS Licensing | 283 | NP_PROD | X | | | Related to operation of utility |
| 63 | Plant - 263A Adjustment | 283 | NP_TOTAL | X | | X | Related to operation of utility |
| 64 | Plant - CIAC | 283 | NP_TOTAL | X | | X | Related to operation of utility |
| 65 | Plant - Depreciation Nuclear Fuel | 282 | PROD_E_NF | | X | | Related to energy usage |
| 66 | Plant - Removal Cost | 282 | NP_TOTAL | X | | X | Related to operation of utility |
| 67 | Plant - Repairs | 282 | NP_TOTAL | X | | X | Related to operation of utility |
| 68 | Plant - Section 174 Deduction | 282 | NP_TOTAL | X | | X | Related to operation of utility |
| 69 | Plant - Asset Retirement Obligation | 282 | NP_PROD | X | | | Related to operation of utility |
| 70 | Plant - Pollution Control Property | 282 | NP_PROD | X | | | Related to operation of utility |
| 71 | Plant - Liberalized Depreciation: Production | 282 | NP_PROD | X | | | Related to operation of utility |
| 72 | Plant - Liberalized Depreciation: Transmission | 282 | NP_TRAN | X | | | Related to transmission operation of utility |
| 73 | Plant - Liberalized Depreciation: Distribution | 282 | NP_DIST | X | | X | Related to distribution operation of utility |
| 74 | Plant - Liberalized Depreciation: General and Intangible | 282 | NP_GI | X | | X | Related to operation of utility |
| 75 | Plant - Liberalized Depreciation: Renewables | 282 | NP_PROD | X | | | Related to operation of utility |
| 76 | Regulatory Assets - SJGS Stranded Costs Units 2&3 | 282 | NP_PROD | X | | | Related to operation of utility |
| 77 | Pension | 283 | LA_TOTAL | X | | X | Related to operation of utility |
| 78 | Loss on Reacquired Debt | 283 | NP_TOTAL | X | | X | Related to operation of utility |
| 79 | Deferred Debits - Rate Case Expense | 283 | RATEBASE_TOT | X | X | X | Related to operation of utility |
| 80 | Energy Storage Agreement | 283 | STORAGE_Trans_ESA | X | | | Related to operation of utility |
| 81 | Prepaid Expenses | 283 | NP_TOTAL | X | | X | Related to operation of utility |
| 82 | Regulatory Assets - COVID-19 Costs | 283 | DIST_C_OTH | | | X | Required to serve customer |
| 83 | Regulatory Assets - Community Solar | 283 | NP_PROD | X | | | Related to operation of utility |
| 84 | Regulatory assets - FAC | 283 | PROD_E_NF | | X | | Related to energy usage |
| 85 | Regulatory Assets - EDAM Costs | 283 | NP_PROD | X | | | Related to operation of utility |
| 86 | Regulatory Assets - EIM Costs | 283 | NP_GI | X | | X | Related to operation of utility |
| 87 | Regulatory Assets - Energy Efficiency | 283 | NP_DIST | X | | X | Related to distribution operation of utility |
| 88 | Regulatory Assets - IRP | 283 | NP_PROD | X | | | Related to operation of utility |
| 89 | Regulatory Assets - Renewable Energy | 283 | NP_PROD | X | | | Related to operation of utility |
| 90 | Regulatory Assets - Renewable Energy Credits | 283 | NP_PROD | X | | | Related to operation of utility |
| 91 | Regulatory Assets - SJGS External Legal Fees | 283 | NP_PROD | X | | | Related to operation of utility |
| 92 | Regulatory Assets - SJGS Final ETA Mine Rec | 283 | NP_PROD | X | | | Related to operation of utility |
| 93 | Regulatory Assets - SJGS Replacement Resources | 283 | NP_PROD | X | | | Related to operation of utility |
| 94 | Regulatory Assets - TOD Rate Pilot Program | 283 | NP_PROD | X | | | Related to operation of utility |

**Public Service Company of New Mexico**
**Schedule M-2 Classification Factors Used to Assign Items of Plant and Expenses to Demand, Energy and Customer**
Base Period Ending June 30, 2026
Test Period Ending September 30, 2028

| Line No. | | FERC Account | Functional Allocator Name | CLASSIFICATION DEMAND | ENERGY | CUSTOMER | Rationale |
|---|---|---|---|---|---|---|---|
| 95 | Regulatory Assets - PCB Refinancing Hedge | 283 | NP_TOTAL | X | | X | Related to operation of utility |
| 96 | Prepaid Expenses: Production | 283 | NP_PROD | X | | | Related to operation of utility |
| 97 | Prepaid Expenses: Transmission | 283 | NP_TRAN | X | | | Related to transmission operation of utility |
| 98 | Prepaid Expenses: Distribution | 283 | NP_DIST | X | | X | Related to distribution operation of utility |
| 99 | Regulatory Assets - 2024 Rate Change | 283 | RATEBASE_TOT | X | X | X | Related to operation of utility |
| 100 | Regulatory Assets - 2025 Rate Change | 283 | RATEBASE_TOT | X | X | X | Related to operation of utility |
| 101 | Regulatory Assets - SJGS Obsolete Inventory | 283 | NP_PROD | X | | | Related to operation of utility |
| 102 | Regulatory Assets - PVNGS Lease costs | 283 | NP_PROD | X | | | Related to operation of utility |
| 103 | Regulatory Assets - PVNGS Undepreciated Investment | 283 | NP_PROD | X | | | Related to operation of utility |
| 104 | Regulatory Assets - PVNGS Replacement Resources | 283 | NP_PROD | X | | | Related to operation of utility |
| 105 | Regulatory Assets - SJ Energy Transition Property (SPE) | 283 | NP_PROD | X | | | Related to operation of utility |
| 106 | Regulatory Liabilities - ITC Sandia | 283 | NP_PROD | X | | | Related to operation of utility |
| 107 | Regulatory Liabilities - ITC Sunbelt | 283 | NP_PROD | X | | | Related to operation of utility |
| 108 | Regulatory Liabilities - Energy Transition Cost True Up | 283 | NP_PROD | X | | | Related to operation of utility |
| 109 | Regulatory Liabilities - SJGS Retirements Rate Credit | 283 | NP_PROD | X | | | Related to operation of utility |
| 110 | Investment Tax Credit - Sunbelt | 283 | NP_PROD | X | | | Related to operation of utility |
| 111 | Investment Tax Credit - Distribution Battery Phase 2 | 283 | NP_DIST | X | | X | Related to distribution operation of utility |
| 112 | Plant - Liberalized Depreciation: Grid Mod | 282 | NP_DIST | X | | X | Related to distribution operation of utility |
| 113 | Regulatory Liabilities - ITC - Distribution Battery Phase 2 | 283 | NP_DIST | X | | X | Related to distribution operation of utility |
| 114 | | | | | | | |
| 115 | TOTAL ACCUMULATED DEFERRED INCOME TAXES | | | | | | |
| 116 | | | | | | | |
| 117 | | | | | | | |
| 118 | REGULATORY ASSETS & LIABILITIES | | | | | | |
| 119 | | | | | | | |
| 120 | Coal Mine Decommissioning | 182 | NP_PROD | X | | | Related to operation of utility |
| 121 | PCB Refinancing Hedge | 182 | NP_PROD | X | | | Related to operation of utility |
| 122 | Reg Liab Renewables Fed Grant | 254 | NP_PROD | X | | | Related to operation of utility |
| 123 | Reg Liab Renewables St Credit | 254 | NP_PROD | X | | | Related to operation of utility |
| 124 | SJGS Coal Agreement Transaction Costs | 182 | NP_PROD | X | | | Related to operation of utility |
| 125 | SJGS 2&3 50% Undepreciated Investment | 182 | NP_PROD | X | | | Related to operation of utility |
| 126 | SJGS Final ETA Mine Rec | 182 | NP_PROD | X | | | Related to operation of utility |
| 127 | Energy Imbalance Market (EIM) One Time Implementation Costs | 182 | NP_GI | X | | X | Related to operation of utility |
| 128 | SJGS Replacement Resources | 182 | NP_PROD | X | | | Related to operation of utility |
| 129 | SJGS External Legal Expenses | 182 | NP_PROD | X | | | Related to operation of utility |
| 130 | SJGS Obsolete Inventory | 182 | NP_PROD | X | | | Related to operation of utility |
| 131 | COVID Regulatory Asset and Liability | 182 | DIST_C_OTH | | | X | Required to serve customer |
| 132 | COVID Bad Debt | 182 | DIST_C_OTH | | | X | Required to serve customer |
| 133 | Community Solar Startup Cost | 182 | NP_PROD | X | | | Related to operation of utility |
| 134 | 2025 Rate Change Expenses | 182 | RATEBASE_TOT | X | X | X | Related to operation of utility |
| 135 | ESA Deferral Regulatory Asset and Liability | 182/254 | STORAGE_Trans_ESA | X | | | Related to operation of utility |
| 136 | PVNGS Unit 1 - 104MW Undepreciated Investment Pre - lease renewal | 182 | NP_PROD | X | | | Related to operation of utility |
| 137 | PVNGS Lease Cost (Note) | 182 | NP_PROD | X | | | Related to operation of utility |
| 138 | PVNGS Unit 2 - 10MW Undepreciated Investment Pre - lease renewal | 182 | NP_PROD | X | | | Related to operation of utility |
| 139 | PVNGS True-up for SRP Transaction Proceeds | 182 | NP_PROD | X | | | Related to operation of utility |
| 140 | PVNGS Costs to Obtain Replacement Resources | 182 | NP_PROD | X | | | Related to operation of utility |
| 141 | SJGS Retirement Rate Credits (Note) | 254 | NP_PROD | X | | | Related to operation of utility |

**Public Service Company of New Mexico**
**Schedule M-2 Classification Factors Used to Assign Items of Plant and Expenses to Demand, Energy and Customer**
Base Period Ending June 30, 2026
Test Period Ending September 30, 2028

| Line No. | | FERC Account | Functional Allocator Name | CLASSIFICATION DEMAND | ENERGY | CUSTOMER | Rationale |
|---|---|---|---|---|---|---|---|
| 142 | 2024 Rate Change Expenses | 182 | RATEBASE_TOT | X | X | X | Related to operation of utility |
| 143 | Energy Transition Cost True-up | 182 | NP_PROD | X | | | Related to operation of utility |
| 144 | Excess Deferred Income Tax Regulatory Liability | 254 | NP_TOTAL | X | | X | Related to operation of utility |
| 145 | 2026 IRP Cost | 182 | NP_PROD | X | | | Related to operation of utility |
| 146 | EDAM Integration Costs | 182 | NP_PROD | X | | | Related to operation of utility |
| 147 | Energy Efficiency M&V Cost | 182 | NP_PROD | X | | | Related to operation of utility |
| 148 | ITC - Sandia Battery | 254 | NP_PROD | X | | | Related to operation of utility |
| 149 | ITC - Sunbelt | 254 | NP_PROD | X | | | Related to operation of utility |
| 150 | Time of Day (TOD) Program | 182 | NP_PROD | X | | | Related to operation of utility |
| 151 | Community Solar Bill Credits | 182 | NP_PROD | X | | | Related to operation of utility |
| 152 | ITC - Distribution Battery Phase 2 | 182 | NP_DIST | X | | X | Related to operation of utility |
| 153 | | | | | | | |
| 154 | | | | | | | |
| 155 | TOTAL REGULATORY ASSETS & LIABILITIES | | | | | | |
| 156 | | | | | | | |
| 157 | OTHER RATE BASE ITEMS | | | | | | |
| 158 | Customer Deposits | 235 | DIST_C_OTH | X | | X | Required to serve customer |
| 159 | RWIP-Production | 108 | NP_PROD | X | | | Related to production operation of utility |
| 160 | RWIP-Transmission | 108 | NP_TRAN | X | | | Related to transmission operation of utility |
| 161 | RWIP-Distribution | 108 | NP_DIST | X | | X | Related to distribution operation of utility |
| 162 | CWIP - Production | 107 | NP_PROD | X | | | Related to production operation of utility |
| 163 | CWIP - Transmission | 107 | NP_TRAN | X | | | Related to transmission operation of utility |
| 164 | CWIP - Distribution | 107 | NP_DIST | X | | X | Related to distribution operation of utility |
| 165 | CWIP - Renewables | 107 | NP_PROD | X | | | Related to production operation of utility |
| 166 | CWIP - Production Related | 107 | NP_PROD | X | | | Related to production operation of utility |
| 167 | ARO Liability - Production | 230 | NP_PROD | X | | | Related to production operation of utility |
| 168 | ARO Liability - Transmission | 230 | NP_TRAN | X | | | Related to transmission operation of utility |
| 169 | ARO Liability - Distribution | 230 | NP_DIST | X | | X | Related to distribution operation of utility |
| 170 | ARO Liability - 65MW SJGS | 230 | NP_PROD | X | | | Related to production operation of utility |
| 171 | Injuries and Damages PNM | 228 | LA_TOTAL | X | | X | Related to operation of utility |
| 172 | NQRP - Expense in Excess of Funding | NA | LA_TOTAL | X | | X | Related to operation of utility |
| 173 | Palo Verde Dry Cask Storage | 253 | NP_PROD | X | | | Related to production operation of utility |
| 174 | FERC Incremental Rates | 253 | NP_TRAN | X | | | Related to transmission operation of utility |
| 175 | Pueblos Transmission Rights-of-Way | 186 | NP_TRAN | X | | | Related to transmission operation of utility |
| 176 | Pueblos Distribution Rights-of-Way | 186 | NP_DIST | X | | X | Related to distribution operation of utility |
| 177 | Prepaid Pension Asset | NA | LA_TOTAL | X | | X | Related to operation of utility |
| 178 | Unamortized Loss on Reacquired Debt | 189 | RATEBASE_TOT | X | X | X | Related to operation of utility |
| 179 | Tucson Electric Power ROW Payment | 253 | TRAN_D | X | | | Related to transmission operation of utility |
| 180 | PV 1&2 Excess Gain Amortization | NA | NP_PROD | X | | | Related to production operation of utility |
| 181 | Possessory Interest Tax | NA | NP_DIST | X | | X | Related to operation of utility |
| 182 | Pathnet | NA | NP_DIST | X | | X | Related to operation of utility |
| 183 | 2025 Rate Change Expenses | 186 | RATEBASE_TOT | X | X | X | Related to operation of utility |
| 184 | FERC 893 Cyber | 253 | TRAN_D | X | | | Related to transmission operation of utility |
| 185 | ESA Damages | 253 | STORAGE_Trans_ESA | X | | | Related to operation of utility |
| 186 | 2027 Rate Change Expenses | 186 | RATEBASE_TOT | X | X | X | Related to operation of utility |
| 187 | TOTAL OTHER RATE BASE ITEMS | | | | | | |
| 188 | | | | | | | |

This schedule sponsored by Witness Larkin

**Public Service Company of New Mexico**
**Schedule M-2 Classification Factors Used to Assign Items of Plant and Expenses to Demand, Energy and Customer**
Base Period Ending June 30, 2026
Test Period Ending September 30, 2028

| Line No. | | FERC Account | Functional Allocator Name | CLASSIFICATION DEMAND | ENERGY | CUSTOMER | Rationale |
|---|---|---|---|---|---|---|---|
| 189 | WORKING CAPITAL | | | | | | |
| 190 | FUEL STOCK | | | | | | |
| 191 | Production Fuel Stock | 151 | PROD_E_NF | | X | | Related to energy usage |
| 192 | PV Nuclear Fuel (120.1 - .5) | 120 | PROD_E_NF | | X | | Related to energy usage |
| 193 | TOTAL FUEL STOCK | | | | | | |
| 194 | | | | | | | |
| 195 | MATERIALS & SUPPLIES | | | | | | |
| 196 | M&S - Production | 154 | NP_PROD | X | | | Related to production operation of utility |
| 197 | M&S - Transmission | 154 | NP_TRAN | X | | | Related to transmission operation of utility |
| 198 | M&S - Distribution | 154 | NP_DIST | X | | X | Related to distribution operation of utility |
| 199 | TOTAL MATERIALS & SUPPLIES | | | | | | |
| 200 | | | | | | | |
| 201 | PREPAYMENTS | | | | | | |
| 202 | Prepayments - Production | 165 | NP_PROD | X | | | Related to production operation of utility |
| 203 | Prepayments - Transmission | 165 | NP_TRAN | X | | | Related to transmission operation of utility |
| 204 | Prepayments - Transmission (FERC Incremental Rates) | 165 | NP_TRAN | X | | | Related to transmission operation of utility |
| 205 | Prepayments - Distribution | 165 | NP_DIST | X | | X | Related to operation of utility |
| 206 | Prepayments - Renewables | 165 | NP_PROD | X | | | Related to production operation of utility |
| 207 | TOTAL PREPAYMENTS | | | | | | |
| 208 | | | | | | | |
| 209 | Total Cash Working Capital (see Rule 530 schedule E-1) | CASH | NP_TOTAL | X | | X | Related to operation of utility |
| 210 | | | | | | | |
| 211 | TOTAL WORKING CAPITAL | | | | | | |
| 212 | | | | | | | |
| 213 | | | | | | | |
| 214 | | | | | | | |
| 215 | | | | | | | |
| 216 | | | | | | | |
| 217 | | | | | | | |
| 218 | TOTAL NET ORIGINAL COST RATE BASE | | | | | | |
| 219 | | | | | | | |
| 220 | | | | | | | |
| 221 | OPERATING REVENUES | | | | | | |
| 222 | SALES REVENUES | | | | | | |
| 223 | Non Fuel Revenue | REV | | | | X | Required to serve customer |
| 224 | Fuel Revenue | FUELREV | PROD_E_NF | | X | | Related to energy usage |
| 225 | TOTAL SALES REVENUES | | | | | | |
| 226 | | | | | | | |
| 227 | OTHER OPERATING REVENUES | | | | | | |
| 228 | Other Electric Rev Gas Plant | 411 | NP_PROD | X | | | Related to production operation of utility |
| 229 | Rent For Electric Property Transmission | 454 | TRAN_D | X | | | Related to transmission operation of utility |
| 230 | Rent for Electric Property - Distribution | 454 | NP_DIST | X | | X | Related to distribution operation of utility |
| 231 | Late Payment Charges | 451 | LA_TOTAL | X | | X | Related to operation of utility |
| 232 | Misc Service Charge Revenue | 451 | LA_TOTAL | X | | X | Related to operation of utility |
| 233 | Other Retail Revenue - Transmission | 456 | LA_TRAN | X | | | Related to transmission operation of utility |
| 234 | Other Retail Revenue - Distribution | 456 | LA_DISTC | X | | X | Related to distribution operation of utility |
| 235 | Generation Ancillary Services Credit Sch 2-5 | 456.1 | NP_PROD | X | | | Related to production operation of utility |

**Public Service Company of New Mexico**
**Schedule M-2 Classification Factors Used to Assign Items of Plant and Expenses to Demand, Energy and Customer**
Base Period Ending June 30, 2026
Test Period Ending September 30, 2028

| Line No. | | FERC Account | Functional Allocator Name | CLASSIFICATION DEMAND | ENERGY | CUSTOMER | Rationale |
|---|---|---|---|---|---|---|---|
| 236 | Real Power Losses (Financial) | 456.1 | NP_TRAN | X | | | Related to transmission operation of utility |
| 237 | Transmission redispatch contract revenues | 456.1 | LA_TRAN | X | | | Related to transmission operation of utility |
| 238 | Ancillary Services-Sch 1 and Sch 8 Transmission | 456.1 | NP_TRAN | X | | | Related to transmission operation of utility |
| 239 | Short Term Firm Sch 7 Transmission | 456.1 | NP_TRAN | X | | | Related to transmission operation of utility |
| 240 | Ancillary Services-Sch 1 ST PTP and Transmission Service | 456.1 | NP_TRAN | X | | | Related to transmission operation of utility |
| 241 | Economy Service Customer Revenue Credits | 442 & 555 | PROD_D | X | | | Related to production operation of utility |
| 242 | Securitization Servicing & Administration Fees | 421 | LA_TOTAL | X | | | Related to operation of utility |
| 243 | Shared Services Revenue | 418 | LA_TOTAL | X | | X | Related to operation of utility |
| 244 | TOTAL OTHER OPERATING REVENUES | | | | | | |
| 245 | | | | | | | |
| 246 | TOTAL OPERATING REVENUES | | | | | | |
| 247 | | | | | | | |
| 248 | OPERATING EXPENSES | | | | | | |
| 249 | | | | | | | |
| 250 | PRODUCTION FUEL-RELATED EXPENSES | | | | | | |
| 251 | PRODUCTION - FPPCAC FUEL RELATED PRE-OSS | | | | | | |
| 252 | Steam Generation | 501 | PROD_E_NF | | X | | Related to energy usage |
| 253 | Steam Fuel Handling and Disposal | 501 | PROD_E_NF | | X | | Related to energy usage |
| 254 | Nuclear | 518 | PROD_E_NF | | X | | Related to energy usage |
| 255 | Nuclear Disposal | 518 | PROD_E_NF | | X | | Related to energy usage |
| 256 | Gas Generation | 547 | PROD_E_NF | | X | | Related to energy usage |
| 257 | Wind PPA | 555 | PROD_E_NF | | X | | Related to energy usage |
| 258 | Geothermal PPA | 555 | PROD_E_NF | | X | | Related to energy usage |
| 259 | Purchased Power Energy | 555 | PROD_E_NF | | X | | Related to energy usage |
| 260 | Spinning reserves | 555 | PROD_E_NF | | X | | Related to energy usage |
| 261 | ESA Fuel Reclass | 555 | STORAGE_Trans_ESA | X | | | Related to operation of utility |
| 262 | TOTAL PRODUCTION - FPPCAC FUEL RELATED PRE-OSS | | | | | | |
| 263 | | | | | | | |
| 264 | OTHER FUEL-RELATED COSTS | | | | | | |
| 265 | Off-system Sales | 447.3 | PROD_E_NF | | X | | Related to energy usage |
| 266 | Tri State Hazard Sharing | 447.3 | PROD_E_NF | | X | | Related to energy usage |
| 267 | EIM Fuel Benefits | 447.3 | PROD_E_NF | | X | | Related to energy usage |
| 268 | Physical Sales of Gas (under FAC hedge plan) | 447.7 | PROD_E_NF | | X | | Related to energy usage |
| 269 | EDAM | 456.1 | PROD_E_NF | | X | | Related to energy usage |
| 270 | TOTAL OTHER FUEL-RELATED COSTS | | | | | | |
| 271 | | | | | | | |
| 272 | TOTAL PRODUCTION FUEL-RELATED EXPENSES (NET OSS) | | | | | | |
| 273 | | | | | | | |
| 274 | OPERATIONS AND MAINTENANCE | | | | | | |
| 275 | PRODUCTION - NON-FUEL ITEMS | | | | | | |
| 276 | Gas Plants Fuel Transportation | 547 | PROD_E_NF | | X | | Related to energy usage |
| 277 | Gas PPA - Valencia - Demand | 555 | PROD_E_NF | | X | | Related to energy usage |
| 278 | Energy Storage Agreement - Demand | 555 | STORAGE_Trans_ESA | X | | | Related to operation of utility |
| 279 | Purchase power for Economy Service Customer | 555 | PROD_E_NF | | X | | Related to energy usage |
| 280 | Purchased power for Rate 36B | 555 | PROD_E_NF | | X | | Related to energy usage |
| 281 | FPPCAC deferral | 555 | PROD_E_NF | | X | | Related to energy usage |
| 282 | Rec Purchases and Renewable Energy Amortization | 555 | PROD_E_NF | | X | | Related to energy usage |

**Public Service Company of New Mexico**
**Schedule M-2 Classification Factors Used to Assign Items of Plant and Expenses to Demand, Energy and Customer**
Base Period Ending June 30, 2026
Test Period Ending September 30, 2028

| Line No. | | FERC Account | Functional Allocator Name | CLASSIFICATION DEMAND | ENERGY | CUSTOMER | Rationale |
|---|---|---|---|---|---|---|---|
| 283 | City of Gallup - Mandoza Station Charges | 501.1 & 555.4 | PROD_E_NF | | X | | Related to energy usage |
| 284 | Coal Mine Decommissioning | 555 | PROD_E_NF | | X | | Related to energy usage |
| 285 | Broker Fees | NA | PROD_E_NF | | X | | Related to energy usage |
| 286 | | | | | | | |
| 287 | | | | | | | |
| 288 | | | | | | | |
| 289 | | | | | | | |
| 290 | | | | | | | |
| 291 | TOTAL PRODUCTION - NON-FUEL ITEMS | | | | | | |
| 292 | | | | | | | |
| 293 | TOTAL PRODUCTION FUEL-RELATED EXPENSES | | | | | | |
| 294 | | | | | | | |
| 295 | STEAM PRODUCTION O&M | | | | | | |
| 296 | Oper-Sup & Eng-Prod | 500 | NP_PROD | X | | | Related to production operation of utility |
| 297 | Oper-Steam Expense-Major | 502 | NP_PROD | X | | | Related to production operation of utility |
| 298 | Oper - Steam from Other Sources | 503 | NP_PROD | X | | | Related to production operation of utility |
| 299 | Oper-Electric Exp-Major | 505 | NP_PROD | X | | | Related to production operation of utility |
| 300 | Oper-Misc Steam Power Exp | 506 | NP_PROD | X | | | Related to production operation of utility |
| 301 | Oper-Rents-Steam Power | 507 | NP_PROD | X | | | Related to production operation of utility |
| 302 | Maint-Sup & Eng-Steam | 510 | NP_PROD | X | | | Related to production operation of utility |
| 303 | Maint-Structures-Steam | 511 | NP_PROD | X | | | Related to production operation of utility |
| 304 | Maint-Boiler Plant | 512 | NP_PROD | X | | | Related to production operation of utility |
| 305 | Maint-Electric Plant | 513 | NP_PROD | X | | | Related to production operation of utility |
| 306 | Maint-Gen & Elec Plant | 514 | NP_PROD | X | | | Related to production operation of utility |
| 307 | SJ Unit 4 65MW - Steam Production | 500-514 | NP_PROD | X | | | Related to production operation of utility |
| 308 | TOTAL STEAM PRODUCTION O&M | | | | | | |
| 309 | | | | | | | |
| 310 | NUCLEAR POWER GENERATION | | | | | | |
| 311 | Oper-Sup & Eng-Nuclear | 517 | NP_PROD | X | | | Related to production operation of utility |
| 312 | Oper-Coolants and Water | 519 | NP_PROD | X | | | Related to production operation of utility |
| 313 | Oper-Steam Expenses-Nuclear | 520 | NP_PROD | X | | | Related to production operation of utility |
| 314 | Oper-Electric Exp | 523 | NP_PROD | X | | | Related to production operation of utility |
| 315 | Oper-Misc Nuclear Power, excluding PV 1&2 Decom & CE Credit | 524 | NP_PROD | X | | | Related to production operation of utility |
| 316 | Oper-Misc Nuclear Power - PV 1&2 Decom & CE Credit | 524 | NP_PROD | X | | | Related to production operation of utility |
| 317 | Oper-Rents-Nuclear, excluding PV 1&2 CE Credit & Excess Gain Amort | 525 | NP_PROD | X | | | Related to production operation of utility |
| 318 | Oper-Rents-Nuclear - PV 1&2 CE Credit | 525 | NP_PROD | X | | | Related to production operation of utility |
| 319 | Maint-Sup & Eng-Nuclear | 528 | NP_PROD | X | | | Related to production operation of utility |
| 320 | Maint-Structures-Major | 529 | NP_PROD | X | | | Related to production operation of utility |
| 321 | Maint-Reactor Plant | 530 | NP_PROD | X | | | Related to production operation of utility |
| 322 | Maint-Elec Plant | 531 | NP_PROD | X | | | Related to production operation of utility |
| 323 | Maint-Misc Nuclear Plant | 532 | NP_PROD | X | | | Related to production operation of utility |
| 324 | TOTAL NUCLEAR POWER GENERATION | | | | | | |
| 325 | | | | | | | |
| 326 | OTHER POWER GENERATION | | | | | | |
| 327 | Oper-Sup & Eng-Other | 546 | NP_PROD | X | | | Related to production operation of utility |
| 328 | Oper-Oth Pwr Gen Exp-Other | 549 | NP_PROD | X | | | Related to production operation of utility |
| 329 | Oper-Oth Pwr Gen Exp-Other - Renewables | 549 | NP_PROD | X | | | Related to production operation of utility |

**Public Service Company of New Mexico**
**Schedule M-2 Classification Factors Used to Assign Items of Plant and Expenses to Demand, Energy and Customer**
Base Period Ending June 30, 2026
Test Period Ending September 30, 2028

| Line No. | | FERC Account | Functional Allocator Name | CLASSIFICATION DEMAND | ENERGY | CUSTOMER | Rationale |
|---|---|---|---|---|---|---|---|
| 330 | Maint - Structures | 552 | NP_PROD | X | | | Related to production operation of utility |
| 331 | Maint-Gen & Elec Plant | 553 | NP_PROD | X | | | Related to production operation of utility |
| 332 | Maint-Gen & Elec Plant - Renewables | 553 | NP_PROD | X | | | Related to production operation of utility |
| 333 | Maint-Gen & Elec Plant | 556 | NP_PROD | X | | | Related to production operation of utility |
| 334 | TOTAL OTHER POWER GENERATION | | | | | | |
| 335 | | | | | | | |
| 336 | SOLAR PRODUCTION | | | | | | |
| 337 | Generation & Plant OpEx-Solar | 558.2 | NP_PROD | X | | | Related to transmission operation of utility |
| 338 | Generation & Plant OpEx-Solar - Renewables | 558.2 Renew | NP_PROD | X | | | Related to distribution operation of utility |
| 339 | Maintenance -Solar Panels, Structures, & Equipment | 558.7 | NP_PROD | X | | | Related to transmission operation of utility |
| 340 | Maintenance -Solar Panels, Structures, & Equipment - Energy Storage Transmission | 558.7 Energy Storage Tran | NP_PROD | X | | | Related to distribution operation of utility |
| 341 | Maintenance -Solar Panels, Structures, & Equipment - Battery Storage | 558.7 Energy Storage Dist | NP_PROD | X | | | Related to production operation of utility |
| 342 | Maintenance -Solar Panels, Structures, & Equipment - Battery | 558.7 Renew | NP_PROD | X | | | Related to production operation of utility |
| 343 | TOTAL SOLAR PRODUCTION | | | | | | |
| 344 | | | | | | | |
| 345 | TOTAL POWER PRODUCTION EXPENSE | | | | | | |
| 346 | | | | | | | |
| 347 | ENERGY STORAGE RELATED O&M | | | | | | |
| 348 | | | | | | | |
| 349 | Maintenance-Storage Eqp, Struc Total- Energy Storage | 578.2 | STORAGE_Dist_PNM | X | | | Related to operation of utility |
| 350 | Maintenance-Storage Eqp, Struc Total - Energy Storage Transmission | 578.2-Energy Storage Tran | STORAGE_Trans_PNM | X | | | Related to operation of utility |
| 351 | Maintenance-Storage Eqp, Struc Total - Energy Storage Distribution | 578.2-Energy Storage Dist. | STORAGE_Dist_PNM | X | | | Related to operation of utility |
| 352 | TOTAL ENERGY STORAGE RELATED O&M | | | | | | |
| 353 | | | | | | | |
| 354 | TRANSMISSION EXPENSES | | | | | | |
| 355 | Oper-Sup & Eng-ETrans | 560 | NP_TRAN | X | | | Related to transmission operation of utility |
| 356 | Oper-Load Dispatch-ETrans | 561 | NP_TRAN | X | | | Related to transmission operation of utility |
| 357 | Oper-Station Exp-ETrans | 562 | NP_TRAN | X | | | Related to transmission operation of utility |
| 358 | Oper-Overhead Lines-ETrans | 563 | NP_TRAN | X | | | Related to transmission operation of utility |
| 359 | Oper-Misc Transmission-E | 566 | NP_TRAN | X | | | Related to transmission operation of utility |
| 360 | Oper-Rents-Transmission-E | 567 | NP_TRAN | X | | | Related to transmission operation of utility |
| 361 | Maint Sup & Eng-ETrans | 568 | NP_TRAN | X | | | Related to transmission operation of utility |
| 362 | Maint-Structures-ETrans | 569 | NP_TRAN | X | | | Related to transmission operation of utility |
| 363 | Maint-Sta Equip-ETrans | 570 | NP_TRAN | X | | | Related to transmission operation of utility |
| 364 | Maint-Overhead Lns-ETrans | 571 | NP_TRAN | X | | | Related to transmission operation of utility |
| 365 | Maint - Underground Line | 572 | NP_TRAN | X | | | Related to transmission operation of utility |
| 366 | Maint-Misc Trans Plt-Maj-E | 573 | NP_TRAN | X | | | Related to transmission operation of utility |
| 367 | Maint-Trans Plant-NonMaj-E | 574 | NP_TRAN | X | | | Related to transmission operation of utility |
| 368 | FERC Incremental Rates - Transmission O&M | 560-564,566-574 | NP_TRAN | X | | | Related to transmission operation of utility |
| 369 | Transmission by Others | 565 | NP_TRAN | X | | | Related to transmission operation of utility |
| 370 | TOTAL TRANSMISSION EXPENSE | | | | | | |
| 371 | | | | | | | |
| 372 | DISTRIBUTION EXPENSES | | | | | | |
| 373 | Operation | | | | | | |
| 374 | Oper-Street Light/Signal-E | 585 | DIST_C_OTH | | | X | Related to distribution operation of utility |
| 375 | Oper-Meter Expense-EDist | 586 | DIST_C_METE | | | X | Related to distribution operation of utility |
| 376 | Oper-Meter Expense-Grid Mod | 586 | DIST_C_METE | | | X | Related to distribution operation of utility |

**Public Service Company of New Mexico**
**Schedule M-2 Classification Factors Used to Assign Items of Plant and Expenses to Demand, Energy and Customer**
Base Period Ending June 30, 2026
Test Period Ending September 30, 2028

| Line No. | | FERC Account | Functional Allocator Name | CLASSIFICATION DEMAND | ENERGY | CUSTOMER | Rationale |
|---|---|---|---|---|---|---|---|
| 377 | Oper-Sup & Eng-EDist | 580 | OM_OPEX | X | | X | Related to distribution operation of utility |
| 378 | Oper-Station Exp-EDist | 582 | NP_DSUB | X | | | Related to distribution operation of utility |
| 379 | Oper-Overhead Lines-EDist | 583 | NP_PRISEC | X | | | Related to distribution operation of utility |
| 380 | Oper-Undergrd Line-EDist | 584 | NP_PRISEC | X | | | Related to distribution operation of utility |
| 381 | Oper-Misc Dist Exp-EDist | 588 | NP_DIST | X | | | Related to distribution operation of utility |
| 382 | Oper-Rents-Distribution-E | 589 | NP_DIST | X | | | Related to distribution operation of utility |
| 383 | TOTAL DISTRIBUTION EXPENSES OPERATION | | | | | | |
| 384 | | | | | | | |
| 385 | Maintenance | | | | | | |
| 386 | Maint-Streetlight/Signal-E | 596 | DIST_C_OTH | | | X | Related to distribution operation of utility |
| 387 | Maint-Meters-EDist | 597 | DIST_C_METE | | | X | Related to distribution operation of utility |
| 388 | Maint-Meters-Grid Mod | 597 | DIST_C_METE | | | X | |
| 389 | Maint-Sup & Eng-EDist | 590 | OM_MAEX | X | | | Related to distribution operation of utility |
| 390 | Maint-Structures-EDist | 591 | NP_DIST | X | | | Related to distribution operation of utility |
| 391 | Maint-Station Equip-EDist | 592 | NP_DSUB | X | | | Related to distribution operation of utility |
| 392 | Maint-Overhead Lns-EDist | 593 | NP_PRISEC | X | | | Related to distribution operation of utility |
| 393 | Maint-Und Lines-EDist | 594 | NP_PRISEC | X | | | Related to distribution operation of utility |
| 394 | Maint-Line Transformers-Edist | 595 | NP_PRISEC | X | | | Related to distribution operation of utility |
| 395 | Maint-Misc Dist Plant-E | 598 | NP_DIST | X | | | Related to distribution operation of utility |
| 396 | Other Distribution O&M - Grid Mod | 580-598 | NP_DIST | X | | | Related to distribution operation of utility |
| 397 | TOTAL DISTRIBUTION EXPENSES MAINTENANCE | | | | | | |
| 398 | | | | | | | |
| 399 | TOTAL DISTRIBUTION EXPENSES | | | | | | |
| 400 | | | | | | | |
| 401 | CUSTOMER ACCOUNTS AND SALES EXPENSES | | | | | | |
| 402 | Supervision-Customer Accts | 901 | DIST_C_OTH | | | X | Related to customer function |
| 403 | Meter Reading Expenses | 902 | DIST_C_MTRD | | | X | Related to customer function |
| 404 | Customer Record and Coll | 903 | DIST_C_BILL | | | X | Related to customer function |
| 405 | Uncollectible Expenses | 904 | DIST_C_BILL | | | X | Related to customer function |
| 406 | Misc Customer Accts Exp | 905 | DIST_C_OTH | | | X | Related to customer function |
| 407 | Cust Service/Inf Expenses | 906 | DIST_C_OTH | | | X | Related to customer function |
| 408 | Customer Assistance Exps | 908 | DIST_C_OTH | | | X | Related to customer function |
| 409 | Inform/Instruc Advert Exps | 909 | DIST_C_OTH | | | X | Related to customer function |
| 410 | Miscellaneous Customer Service & Informational Expenses | 910 | DIST_C_OTH | | | X | Related to customer function |
| 411 | Demo & Selling Expenses - Excluding Production | 912 | DIST_C_OTH | | | X | Related to customer function |
| 412 | Demo & Selling Expenses - Production | 912 | DIST_C_OTH | | | X | Related to customer function |
| 413 | Advertising Expense | 913 | DIST_C_OTH | | | X | Related to customer function |
| 414 | Total Customer Accounting Expenses - Grid Mod | 901-905 | NP_DIST | X | | | Related to customer function |
| 415 | TOTAL CUSTOMER ACCOUNTS AND SALES EXPENSES | | | | | | |
| 416 | | | | | | | |
| 417 | ADMINISTRATIVE AND GENERAL EXPENSES | | | | | | |
| 418 | Operation | | | | | | |
| 419 | Admin and General Salaries | 920 | LA_TOTAL | X | | X | Related to operation of utility |
| 420 | AG Office Supplies Exp | 921 | LA_TOTAL | X | | X | Related to operation of utility |
| 421 | A&G Charged to CWIP | 922 | LA_TOTAL | X | | X | Related to operation of utility |
| 422 | Production Related - Shared Services | 922.9 | LA_PROD | X | | | Related to production operation of utility |
| 423 | Transmission Related - Shared Services | 922.9 | LA_TRAN | X | | | Related to transmission operation of utility |

**Public Service Company of New Mexico**
**Schedule M-2 Classification Factors Used to Assign Items of Plant and Expenses to Demand, Energy and Customer**
Base Period Ending June 30, 2026
Test Period Ending September 30, 2028

| Line No. | | FERC Account | Functional Allocator Name | CLASSIFICATION DEMAND | ENERGY | CUSTOMER | Rationale |
|---|---|---|---|---|---|---|---|
| 424 | Distribution/Customer Related - Shared Services | 922.9 | LA_DISTC | X | | | Related to distribution operation of utility |
| 425 | Outside Services | 923 | LA_TOTAL | X | | X | Related to operation of utility |
| 426 | Property Insurance | 924 | NP_TOTAL | X | | X | Related to operation of utility |
| 427 | Injuries or Damages-Safety | 925 | LA_TOTAL | X | | X | Related to operation of utility |
| 428 | Empl Pension and Benefits | 926 | LA_TOTAL | X | | X | Related to operation of utility |
| 429 | Regulatory Commission Exp | 928 | LA_TOTAL | X | | X | Related to operation of utility |
| 430 | Regulatory Commission Exp - 2024 Rate Case Expenses | 928 | RATEBASE_TOT | X | X | X | Related to operation of utility |
| 431 | Misc AG Expenses | 930 | LA_TOTAL | X | | X | Related to operation of utility |
| 432 | Rents-Cust | 931 | LA_TOTAL | X | | X | Related to operation of utility |
| 433 | Total Gas A&G Maintenance | 932 | LA_TOTAL | X | | X | Related to operation of utility |
| 434 | Maint of General Plant | 935 | LA_TOTAL | X | | X | Related to operation of utility |
| 435 | Renewables - A&G (920-935) | 920-935 | LA_TOTAL | X | | X | Related to operation of utility |
| 436 | Grid Mod - A&G (920-935) | 920-935 | NP_DIST | X | | | Related to operation of utility |
| 437 | Energy Storage Transmission - A&G (920-935) | 920-935 | STORAGE_Trans_PNM | X | | | Related to operation of utility |
| 438 | Energy Storage Distribution - A&G (920-935) | 920-935 | STORAGE_Dist_PNM | X | | | Related to operation of utility |
| 439 | TOTAL ADMINISTRATIVE AND GENERAL EXPENSE | | | | | | |
| 440 | | | | | | | |
| 441 | TOTAL OPERATIONS AND MAINTENANCE | | | | | | |
| 442 | | | | | | | |
| 443 | DEPRECIATION & AMORTIZATION EXPENSE | | | | | | |
| 444 | PRODUCTION DEPRECIATION & AMORTIZATION EXPENSE | | | | | | |
| 445 | Steam Production Plant | 403 | NP_PROD | X | | | Related to production operation of utility |
| 446 | Nuclear Production Net Plant - Palo Verde | 403 | NP_PROD | X | | | Related to production operation of utility |
| 447 | PV 1&2 Acquisition Adjustment Amortization | 406 | NP_PROD | X | | | Related to production operation of utility |
| 448 | PV 2 Lease Acquisition Adjustment - First Chicago Amortization | 406 | NP_PROD | X | | | Related to production operation of utility |
| 449 | Other Production Plant - Gas & 40 MW Solar | 403 | NP_PROD | X | | | Related to production operation of utility |
| 450 | Other Production Plant - Renewable | 403 | NP_PROD | X | | | Related to production operation of utility |
| 451 | TOTAL PRODUCTION DEPRECIATION & AMORTIZATION EXPENSE | | | | | | |
| 452 | | | | | | | |
| 453 | ENERGY STORAGE DEPRECIATION AND AMORTIZATION | | | | | | |
| 454 | Transmission Sited Batteries | 403 | STORAGE_Trans_PNM | X | | | Related to transmission operation of utility |
| 455 | Distribution Sited Batteries | 403 | STORAGE_Dist_PNM | X | | | Related to distribution operation of utility |
| 456 | TOTAL ENERGY DEPRECIATION AND AMORTIZATION | | | | | | |
| 457 | | | | | | | |
| 458 | TRANSMISSION DEPRECIATION & AMORTIZATION EXPENSE | | | | | | |
| 459 | Step-Up Transformers & Generation Interconnections | 403 | NP_TRAN | X | | | Related to transmission operation of utility |
| 460 | Transmission System Plant - Allocated | 403 | NP_TRAN | X | | | Related to transmission operation of utility |
| 461 | Transmission System Plant - FERC Incremental Rates | 403 | NP_TRAN | X | | | Related to transmission operation of utility |
| 462 | Transmission System Net Plant - Dedicated Retail | 403 | NP_TRAN | X | | | Related to transmission operation of utility |
| 463 | Transmission System Plant - Acq. Adj. (EIP) | 406 | NP_TRAN | X | | | Related to transmission operation of utility |
| 464 | TOTAL TRANSMISSION DEPRECIATION & AMORTIZATION EXPENSE | | | | | | |
| 465 | | | | | | | |
| 466 | DISTRIBUTION DEPRECIATION & AMORTIZATION EXPENSE | | | | | | |
| 467 | Distribution Substations Net Plant - PNM | 403 | DIST_D_SUBS | X | | | Related to distribution operation of utility |
| 468 | Distribution Substations Net Plant - Renewables | 403 | DIST_D_SUBS | X | | | Related to distribution operation of utility |
| 469 | Distribution Substations Net Plant - Grid Mod | 403 | DIST_D_SUBS | X | | | Related to distribution operation of utility |
| 470 | Primary Distribution System Net Plant - PNM | 403 | DIST_D_PRIM | X | | | Related to distribution operation of utility |

**Public Service Company of New Mexico**
**Schedule M-2 Classification Factors Used to Assign Items of Plant and Expenses to Demand, Energy and Customer**
Base Period Ending June 30, 2026
Test Period Ending September 30, 2028

| Line No. | | FERC Account | Functional Allocator Name | CLASSIFICATION DEMAND | ENERGY | CUSTOMER | Rationale |
|---|---|---|---|---|---|---|---|
| 471 | Primary Distribution System Net Plant - Renewables | 403 | DIST_D_PRIM | X | | | Related to distribution operation of utility |
| 472 | Primary Distribution System Net Plant - Grid Mod | 403 | DIST_D_PRIM | X | | | Related to distribution operation of utility |
| 473 | Secondary Distribution System Net Plant - PNM | 403 | DIST_D_SEC | X | | | Related to distribution operation of utility |
| 474 | Secondary Distribution System Net Plant - Renewables | 403 | DIST_D_SEC | X | | | Related to distribution operation of utility |
| 475 | Secondary Distribution System Net Plant - Grid Mod | 403 | DIST_D_SEC | X | | | Related to distribution operation of utility |
| 476 | Services Net Plant - PNM | 403 | DIST_C_SERV | | | X | Related to production operation of utility |
| 477 | Meters Net Plant - PNM | 403 | DIST_C_METE | | | X | Required to serve customer |
| 478 | Meters Net Plant - Grid Mod | 403 | DIST_C_METE | | | X | Required to serve customer |
| 479 | Private Lighting - 371 | 403 | DIST_C_OTH | | | X | Required to serve customer |
| 480 | Street Lighting - 373 | 403 | DIST_C_OTH | | | X | Required to serve customer |
| 481 | TOTAL DISTRIBUTION DEPRECIATION & AMORTIZATION EXPENSE | | | | | | |
| 482 | | | | | | | |
| 483 | G&I DEPRECIATION & AMORTIZATION EXPENSE | | | | | | |
| 484 | Production General & Intangible Net Plant | 403 | LA_TOTAL | X | | X | Related to distribution operation of utility |
| 485 | Renewables General & Intangible Net Plant | 403 | LA_TOTAL | X | | X | Related to distribution operation of utility |
| 486 | Grid Mod General & Intangible Net Plant | 403 | LA_TOTAL | X | | X | Related to distribution operation of utility |
| 487 | Production Related (Shared Services) | 403 | LA_PROD | X | | | Related to production operation of utility |
| 488 | Transmission Related (Shared Services) | 403 | LA_TRAN | X | | | Related to transmission operation of utility |
| 489 | Distribution/Customer Related (Shared Services) | 403 | LA_DISTC | X | | X | Related to distribution operation of utility |
| 490 | TOTAL G&I DEPRECIATION & AMORTIZATION EXPENSE | | | | | | |
| 491 | | | | | | | |
| 492 | TOTAL DEPRECIATION & AMORTIZATION EXPENSE | | | | | | |
| 493 | | | | | | | |
| 494 | GENERAL TAXES AND OTHER EXPENSES | | | | | | |
| 495 | PROPERTY TAX EXPENSE | | | | | | |
| 496 | PRODUCTION PROPERTY TAX EXPENSE | | | | | | |
| 497 | Steam Production Plant | 408 | NP_PROD | X | | | Related to production operation of utility |
| 498 | Nuclear Production Net Plant - Palo Verde | 408 | NP_PROD | X | | | Related to production operation of utility |
| 499 | Other Production Plant - Gas & 40 MW Solar | 408 | NP_PROD | X | | | Related to production operation of utility |
| 500 | Other Production Plant - Renewable | 408 | NP_PROD | X | | | Related to production operation of utility |
| 501 | TOTAL PRODUCTION PROPERTY TAX EXPENSE | | | | | | |
| 502 | | | | | | | |
| 503 | ENERGY STORAGE PROPERTY TAXES | | | | | | |
| 504 | Transmission Sited Batteries | 408 | STORAGE_Trans_PNM | X | | | Related to transmission operation of utility |
| 505 | Distribution Sited Batteries | 408 | STORAGE_Dist_PNM | X | | | Related to distribution operation of utility |
| 506 | TOTAL ENERGY STORAGE PROPERTY TAXES | | | | | | |
| 507 | | | | | | | |
| 508 | TRANSMISSION PROPERTY TAX EXPENSE | | | | | | |
| 509 | Step-Up Transformers - Excluding SJGS 65MW | 408 | NP_TRAN | X | | | Related to transmission operation of utility |
| 510 | Transmission System Plant | 408 | NP_TRAN | X | | | Related to transmission operation of utility |
| 511 | Transmission System Plant - FERC Incremental Rates | 408 | NP_TRAN | X | | | Related to transmission operation of utility |
| 512 | Transmission System Plant - Dedicated Retail | 408 | NP_TRAN | X | | | Related to transmission operation of utility |
| 513 | TOTAL TRANSMISSION PROPERTY TAX EXPENSE | | | | | | |
| 514 | | | | | | | |
| 515 | DISTRIBUTION PROPERTY TAX EXPENSE | | | | | | |
| 516 | Distribution Substations Net Plant - PNM | 408 | DIST_D_SUBS | X | | | Related to distribution operation of utility |
| 517 | Distribution Substations Net Plant - Renewables | 408 | DIST_D_SUBS | X | | | Related to distribution operation of utility |

**Public Service Company of New Mexico**
**Schedule M-2 Classification Factors Used to Assign Items of Plant and Expenses to Demand, Energy and Customer**
Base Period Ending June 30, 2026
Test Period Ending September 30, 2028

| Line No. | | FERC Account | Functional Allocator Name | CLASSIFICATION DEMAND | ENERGY | CUSTOMER | Rationale |
|---|---|---|---|---|---|---|---|
| 518 | Distribution Substations Net Plant - Grid Mod | 408 | DIST_D_SUBS | X | | | Related to distribution operation of utility |
| 519 | Primary Distribution System Net Plant - PNM | 408 | DIST_D_PRIM | X | | | Related to distribution operation of utility |
| 520 | Primary Distribution System Net Plant - Renewables | 408 | DIST_D_PRIM | X | | | Related to distribution operation of utility |
| 521 | Primary Distribution System Net Plant - Grid Mod | 408 | DIST_D_PRIM | X | | | Related to distribution operation of utility |
| 522 | Secondary Distribution System Net Plant - PNM | 408 | DIST_D_SEC | X | | | Related to distribution operation of utility |
| 523 | Secondary Distribution System Net Plant - Renewables | 408 | DIST_D_SEC | X | | | Related to distribution operation of utility |
| 524 | Secondary Distribution System Net Plant - Grid Mod | 408 | DIST_D_SEC | X | | | Related to distribution operation of utility |
| 525 | Services Net Plant - PNM | 408 | DIST_C_SERV | | | X | Related to production operation of utility |
| 526 | Meters Net Plant - PNM | 408 | DIST_C_METE | | | X | Required to serve customer |
| 527 | Meters - Grid Mod | 408 | DIST_C_METE | | | X | Required to serve customer |
| 528 | Private Lighting - 371 | 408 | DIST_C_OTH | | | X | Required to serve customer |
| 529 | Street Lighting - 373 | 408 | DIST_C_OTH | | | X | Required to serve customer |
| 530 | TOTAL DISTRIBUTION PROPERTY TAX EXPENSE | | | | | | |
| 531 | | | | | | | |
| 532 | GENERAL & INTANGIBLE PROPERTY TAX EXPENSE | | | | | | |
| 533 | Production General & Intangible Net Plant | 408 | LA_TOTAL | X | | X | Related to distribution operation of utility |
| 534 | Renewables General & Intangible Net Plant | 408 | LA_TOTAL | X | | X | Related to distribution operation of utility |
| 535 | Grid Mod General & Intangible Net Plant | 408 | LA_TOTAL | X | | X | Related to distribution operation of utility |
| 536 | Production Related (Shared Services) | 408 | LA_PROD | X | | | Related to production operation of utility |
| 537 | Transmission Related (Shared Services) | 408 | LA_TRAN | X | | | Related to transmission operation of utility |
| 538 | Distribution/Customer Related (Shared Services) | 408 | LA_DISTC | X | | X | Related to distribution operation of utility |
| 539 | TOTAL GENERAL & INTANGIBLE PROPERTY TAX EXPENSE | | | | | | |
| 540 | | | | | | | |
| 541 | TOTAL PROPERTY TAX EXPENSE | | | | | | |
| 542 | | | | | | | |
| 543 | PAYROLL TAXES | | | | | | |
| 544 | Payroll - Production Related | 408 | LA_PROD | X | | | Related to production operation of utility |
| 545 | Payroll - Energy Storage Related | 408 | LA_PROD | X | | | Related to production operation of utility |
| 546 | Payroll - Transmission Related | 408 | LA_TRAN | X | | | Related to transmission operation of utility |
| 547 | Payroll - Distribution Related | 408 | LA_DIST | X | | | Related to distribution operation of utility |
| 548 | TOTAL PAYROLL TAXES | | | | | | |
| 549 | | | | | | | |
| 550 | OTHER TAXES | | | | | | |
| 551 | Misc Taxes - Production Related | 408 | NP_PROD | X | | | Related to production operation of utility |
| 552 | Misc Taxes - Transmission Related | 408 | NP_TRAN | X | | | Related to transmission operation of utility |
| 553 | Misc Taxes - Distribution Related | 408 | NP_DIST | X | | | Related to distribution operation of utility |
| 554 | Regulatory Commission Fees (I&S) PNM | 408 | NP_PROD | X | | | Related to production operation of utility |
| 555 | Joint Projects Four Corners | 408 | NP_PROD | X | | | Related to production operation of utility |
| 556 | Joint Projects PVNGS | 408 | NP_PROD | X | | | Related to production operation of utility |
| 557 | Joint Projects Transmission | 408 | NP_TRAN | X | | | Related to transmission operation of utility |
| 558 | Native American Taxes - Production | 408 | NP_PROD | X | | | Related to production operation of utility |
| 559 | Native American Taxes - Transmission | 408 | NP_TRAN | X | | | Related to transmission operation of utility |
| 560 | Native American Taxes - Dedicated FERC Incremental Rates | 408 | NP_TRAN | X | | | Related to transmission operation of utility |
| 561 | Native American Taxes - Distribution | 408 | NP_DIST | X | | | Related to distribution operation of utility |
| 562 | TOTAL OTHER TAXES | | | | | | |
| 563 | | | | | | | |
| 564 | TOTAL GENERAL TAXES | | | | | | |

**Public Service Company of New Mexico**
**Schedule M-2 Classification Factors Used to Assign Items of Plant and Expenses to Demand, Energy and Customer**
Base Period Ending June 30, 2026
Test Period Ending September 30, 2028

| Line No. | | FERC Account | Functional Allocator Name | CLASSIFICATION DEMAND | ENERGY | CUSTOMER | Rationale |
|---|---|---|---|---|---|---|---|
| 565 | | | | | | | |
| 566 | OTHER ALLOWABLE EXPENSES | | | | | | |
| 567 | Interest on Customer Deposits | 431 | DIST_C_OTH | | | X | Required to serve customer |
| 568 | Amortization Loss on Reacquired Debt | 407.3 | NP_TOTAL | X | | X | Related to operation of utility |
| 569 | Renewable Grant Amortization | 407 | NP_PROD | X | | | Related to operation of utility |
| 570 | Accretion ARO - Production Related | 411 | NP_PROD | X | | | Related to production operation of utility |
| 571 | Accretion ARO - Production Related - (SJGS 65MW) | 411 | NP_PROD | X | | | Related to production operation of utility |
| 572 | Accretion ARO - Distribution Related | 411 | NP_DIST | X | | | Related to distribution operation of utility |
| 573 | Western Spirit | 407.3 | NP_TRAN | X | | | Related to transmission operation of utility |
| 574 | Amortization of 50% SJGS 2&3 Undepreciated Balance | 407.3 | NP_PROD | X | | | Related to production operation of utility |
| 575 | Amortization of Eastern Imbalance Market Implementation Regulatory Asset | 407.3 | NP_GI | X | | X | Related to energy usage |
| 576 | Amortization of PVNGS Unit 1 Undepreciated Investment Post - lease renewal | 407.3 | NP_PROD | X | | | Related to production operation of utility |
| 577 | Amortization of PVNGS Unit 1 Undepreciated Investment Pre - lease renewal | 407.3 | NP_PROD | X | | | Related to production operation of utility |
| 578 | Amortization of PVNGS Unit 2 Undepreciated Investment Post - lease renewal | 407.3 | NP_PROD | X | | | Related to production operation of utility |
| 579 | Amortization of PVNGS Unit 2 Undepreciated Investment Pre - lease renwal | 407.3 | NP_PROD | X | | | Related to production operation of utility |
| 580 | Amortization of PVNGS True-up for SRP Transaction | 407.3 | NP_PROD | X | | | Related to production operation of utility |
| 581 | Amortization of PVNGS Costs to Obtain Replacement Resources | 407.3 | NP_PROD | X | | | Related to production operation of utility |
| 582 | Amortization of SJGS Replacement Resources | 407.3 | NP_PROD | X | | | Related to production operation of utility |
| 583 | Amortization of SJGS Legal Expenses | 407.3 | NP_PROD | X | | | Related to production operation of utility |
| 584 | Amortization of SJGS Obsolete Inventory | 407.3 | NP_PROD | X | | | Related to production operation of utility |
| 585 | Amortization of SJGS Final ETA Mine Rec | 407.3 | NP_PROD | X | | | Related to production operation of utility |
| 586 | Amortization of Time of Day (TOD) Program | 407.3 | NP_PROD | X | | | Related to production operation of utility |
| 587 | Amortization of Community Solar Startup Cost | 407.3 | NP_PROD | X | | | Related to production operation of utility |
| 588 | Amortization of ESA Deferral Regulatory Asset and Liability | 407.3 | NP_PROD | X | | | Related to production operation of utility |
| 589 | Amortization of 2026 IRP Cost | 407.3 | NP_PROD | X | | | Related to production operation of utility |
| 590 | Amortization of EDAM Integration Costs | 407.3 | NP_PROD | X | | | Related to production operation of utility |
| 591 | Amortization of Energy Efficiency M&V Cost | 407.3 | DIST_C_OTH | | | X | Required to serve customer |
| 592 | Amortization of PVNGS Lease Cost | 407.3 | NP_PROD | X | | | Related to production operation of utility |
| 593 | Amortization of SJGS Retirement Rate Credits | 407.3 | NP_PROD | X | | | Related to production operation of utility |
| 594 | Amortization of ITC Sandia Battery | 407.3 | TRAN_D | X | | | Related to transmission operation of utility |
| 595 | Amortization of COVID Regulatory Asset and Liability | 407.3 | DIST_C_OTH | | | X | Required to serve customer |
| 596 | Amortization of SJGS Decommissioning Ordinance Costs | 407.3 | NP_PROD | X | | | Related to production operation of utility |
| 597 | Amortization of FERC 893 Cyber | 407.3 | TRAN_D | X | | | Related to transmission operation of utility |
| 598 | Amortization of 2027 Rate Case Expenses | 407.3 | RATEBASE_TOT | X | X | X | Related to operation of utility |
| 599 | Amortization of Energy Transition Cost True - Up | 407.3 | NP_PROD | X | | | Related to production operation of utility |
| 600 | Amortization of ITC Sunbelt Battery | 407.3 | TRAN_D | X | | | Related to transmission operation of utility |
| 601 | Amortization of Community Solar Bill Credits | 407.3 | NP_PROD | X | | | Related to production operation of utility |
| 602 | Amortization of Energy Imbalance Market (EIM) One Time Implementation Costs | 407.3 | NP_PROD | X | | | Related to production operation of utility |
| 603 | Amortization of Legacy Meter Retirements | 407.3 | DIST_C_METE | | | X | Required to serve customer |
| 604 | Amortization of Legacy Meter in Rates | 407.3 | DIST_C_METE | | | X | Required to serve customer |
| 605 | Amortization of 2027 Grid Modernization | 407.3 | DIST_C_OTH | | | X | Required to serve customer |

# PNM Schedule M-3

Comparison of rates for service under the present and proposed schedules

**Public Service Company of New Mexico**
**M-3 Demand and Energy Loss Factors: Base and Test Period**
Base Period Ending June 30, 2026
Test Period Ending September 30, 2028

**Base Period 2025 -2026 Loss Factors[1]**

| Line No. | Energy Loss Rates by Voltage Level (Rates are Additive[2]) | Generation to Meter | Meter to Generation | Applicable Rate Classes |
|---|---|---|---|---|
| 1 | Transmission | 2.705% | 2.780% | All rate classes |
| 2 | Subtransmission (46/69 kV) | 0.328% | 0.329% | All rate classes except 15B, 33B, and 36B |
| 3 | Substation | 0.567% | 0.570% | All rate classes except 5B, 15B, 33B, and 36B |
| 4 | Primary Distribution | 1.564% | 1.589% | All rate classes except 5B, 15B, 30B, 33B, 35B, and 36B |
| 5 | Secondary Distribution | 2.192% | 2.241% | All rate classes except 4B, 5B, 11B, 15B, 33B, 35B, and 36B |

| Line No. | Demand Loss Rates by Voltage Level (Rates are Additive) | Generation to Meter | Meter to Generation | Applicable Rate Classes |
|---|---|---|---|---|
| 6 | Network | 0.00% | 0.00% | N/A |
| 7 | Transmission | 2.70% | 2.78% | All rate classes |
| 8 | Subtransmission | 0.33% | 0.33% | All rate classes except 15B, 33B, and 36B |
| 9 | Substation | 0.62% | 0.62% | All rate classes except 5B, 15B, 33B, and 36B |
| 10 | Primary Distribution | 3.78% | 3.93% | All rate classes except 5B, 15B, 30B, 33B, 35B, and 36B |
| 11 | Secondary Distribution | 2.72% | 2.80% | All rate classes except 4B, 5B, 11B, 15B, 33B, 35B, and 36B |

**Test Period Losses[2]**

| Line No. | Energy Loss Rates by Voltage Level (Rates are Additive[2]) | Generation to Meter | Meter to Generation | Applicable Rate Classes |
|---|---|---|---|---|
| 1 | Transmission | 2.70% | 2.78% | All rate classes |
| 2 | Subtransmission (46/69 kV) | 0.33% | 0.33% | All rate classes except 15B, 33B, and 36B |
| 3 | Substation | 0.57% | 0.57% | All rate classes except 5B, 15B, 33B, and 36B |
| 4 | Primary Distribution | 1.56% | 1.59% | All rate classes except 5B, 15B, 30B, 33B, 35B, and 36B |
| 5 | Secondary Distribution | 2.19% | 2.24% | All rate classes except 4B, 5B, 11B, 15B, 33B, 35B, and 36B |

| Line No. | Demand Loss Rates by Voltage Level (Rates are Additive*) | Generation to Meter | Meter to Generation | Applicable Rate Classes |
|---|---|---|---|---|
| 6 | Network | 0.00% | 0.00% | N/A |
| 7 | Transmission | 2.70% | 2.78% | All rate classes |
| 8 | Subtransmission | 0.33% | 0.33% | All rate classes except 15B, 33B, and 36B |
| 9 | Substation | 0.62% | 0.62% | All rate classes except 5B, 15B, 33B, and 36B |
| 10 | Primary Distribution | 3.78% | 3.93% | All rate classes except 5B, 15B, 30B, 33B, 35B, and 36B |
| 11 | Secondary Distribution | 2.72% | 2.80% | All rate classes except 4B, 5B, 11B, 15B, 33B, 35B, and 36B |

Notes:

1. Base period and Test period loss rates are the same.
2. Rates are additive means that rates compound.

For example, going from Secondary Meter to Generation, loss rates (LR) are combined multiplicatively as:

Loss Rate Combined = (1+LR Secondary) * (1+LR Primary) * (1+LR Substation) * (1+LR Subtrans) * (1+LR Trans) - 1.0

The combined result is larger that the arithmetic sum of the stepwise loss rates because of compounding.

Rate of return by rate classification

# PNM N Series Schedules

Schedule N-1: Rate of return by rate classification

# PNM Schedule N-1

Rate of return by rate classification

**Public Service Company of New Mexico**
**N-1 Rate of Return by Rate Classification**
Base Period Ending June 30, 2026
Test Period Ending September 30, 2028

| | Total | Schedule 1 | Schedule 2 | Schedule 3B |
|---|---|---|---|---|
| | PNM Consolidated | Residential 1 | Small Power 2 | General Power 3 |
| **Base Period - Current Rates** | | | | |
| Total Net Original Cost Rate Base | 3,443,839,870 | 1,827,219,996 | 409,544,086 | 505,536,367 |
| Net Operating Income at Current Rates | 211,426,684 | 60,068,372 | 27,730,528 | 25,995,308 |
| Forecasted Rate of Return at Present Rates - Total | 6.14% | 3.29% | 6.77% | 5.14% |
| Relative Rate of Return at Present Rates - Total | 1.0 | 0.5 | 1.1 | 0.8 |
| **Test Period - Proposed Rates (Unbanded)** | | | | |
| Total Net Original Cost Rate Base | 4,215,259,298 | 2,191,445,850 | 482,343,040 | 580,301,908 |
| Net Operating Income at Proposed Rate of Return | 316,615,179 | 164,629,989 | 36,234,843 | 43,568,504 |
| Forecasted Rate of Return at Proposed Rate of Return - Total | 7.51% | 7.51% | 7.51% | 7.51% |
| Relative Rate of Return at Proposed Rate of Return - Total | 1.0 | 1.0 | 1.0 | 1.0 |
| **Test Period - Proposed Rates (Banded)** | | | | |
| Total Net Original Cost Rate Base | 4,215,259,298 | 2,191,445,850 | 482,343,040 | 580,301,908 |
| Net Operating Income at Proposed Rate of Return | 316,615,179 | 136,100,362 | 40,754,259 | 42,616,298 |
| Forecasted Rate of Return at Proposed Rate of Return - Total | 7.51% | 6.21% | 8.45% | 7.34% |
| Relative Rate of Return at Proposed Rate of Return - Total | 1 | 0.8 | 1.1 | 1.0 |

This schedule is sponsored by PNM Witness Larkin

| Schedule 3C | Schedule 3D | Schedule 3E | Schedule 3F | Schedule 4 | Schedule 5 | Schedule 10 | Schedule 11 |
|---|---|---|---|---|---|---|---|
| **General Power 4** | **General Power 5** | **General Power 6** | **General Power 7** | **Large Power 8** | **Mines 9** | **Irrigation 10** | **Water & Sewage 11** |
| 129,451,541 | 34,272,753 | 11,066,991 | 3,809,213 | 214,256,246 | 2,798,146 | 9,225,641 | 43,183,999 |
| 9,270,179 | 1,891,270 | 669,455 | 89,748 | 14,400,583 | 542,838 | 444,023 | 2,386,963 |
| 7.16% | 5.52% | 6.05% | 2.36% | 6.72% | 19.40% | 4.81% | 5.53% |
| 1.2 | 0.9 | 1.0 | 0.4 | 1.1 | 3.2 | 0.8 | 0.9 |
| 157,292,330 | 41,186,045 | 10,189,630 | 5,512,414 | 286,493,891 | | 10,951,813 | 44,528,663 |
| 11,815,291 | 3,092,389 | 765,439 | 414,412 | 21,495,667 | | 822,723 | 3,347,710 |
| 7.51% | 7.51% | 7.51% | 7.52% | 7.50% | | 7.51% | 7.52% |
| 1.0 | 1.0 | 1.0 | 1.0 | 1.0 | | 1.0 | 1.0 |
| 157,292,330 | 41,186,045 | 10,189,630 | 5,512,414 | 286,493,891 | | 10,951,813 | 44,528,663 |
| 16,121,380 | 2,926,989 | 942,578 | 334,662 | 24,006,804 | | 784,909 | 2,659,510 |
| 10.25% | 7.11% | 9.25% | 6.07% | 8.38% | | 7.17% | 5.97% |
| 1.4 | 0.9 | 1.2 | 0.8 | 1.1 | | 1.0 | 0.8 |

This schedule is sponsored by PNM Witness Larkin

| Schedule 15 | Schedule 30 | Schedule 33B | Schedule 35B | Schedule 36B | Schedule 6 | Schedule 20 |
|---|---|---|---|---|---|---|
| Universities | Manufacturing | Station Service | Large Power Service >3,000kW | Special Service Rate Renew Energy Res | Private Area Lighting | Street Lighting |
| 12 | 13 | 14 | 15 | 16 | 17 | 18 |
| 10,165,772 | 96,317,169 | 1,130,556 | 26,593,871 | 85,613,325 | 4,534,089 | 29,120,108 |
| 1,290,855 | 5,497,846 | (34,009) | 952,305 | 57,586,787 | 1,025,894 | 1,617,737 |
| 12.70% | 5.71% | -3.01% | 3.58% | 67.26% | 22.63% | 5.56% |
| 2.1 | 0.9 | (0.5) | 0.6 | 11.0 | 3.7 | 0.9 |
| 10,417,068 | 124,014,823 | 1,530,034 | 52,825,509 | 174,112,179 | 4,969,825 | 37,144,276 |
| 779,637 | 9,289,661 | 114,608 | 3,957,305 | 13,115,786 | 374,045 | 2,797,171 |
| 7.48% | 7.49% | 7.49% | 7.49% | 7.53% | 7.53% | 7.53% |
| 1.0 | 1.0 | 1.0 | 1.0 | 1.0 | 1.0 | 1.0 |
| 10,417,068 | 124,014,823 | 1,530,034 | 52,825,509 | 174,112,179 | 4,969,825 | 37,144,276 |
| 2,181,925 | 10,005,529 | 948,953 | 4,919,180 | 28,972,089 | 1,483,811 | 855,941 |
| 20.95% | 8.07% | 62.02% | 9.31% | 16.64% | 29.86% | 2.30% |
| 2.8 | 1.1 | 8.3 | 1.2 | 2.2 | 4.0 | 0.3 |

This schedule is sponsored by PNM Witness Larkin

Rate design

# PNM O Series Schedules

Schedule O-1: Total revenue requirements by rate classification

Schedule O-2: Proof of revenue analysis

Schedule O-3: Comparison of rates for service under the present and proposed schedules

Schedule O-4: Explanation of proposed changes to existing rate schedules

# PNM Schedule O-1

Total revenue requirements by rate classification

**Public Service Company of New Mexico**

**O-1 Total Revenue Requirements by Consolidated Rate Classification**

Test Period Ending September 30, 2028

| | | | Present Revenues | | |
|---|---|---|---|---|---|
| Line No. | Consolidated Tariff Class | PNM kWh Total | Non-Fuel | FPPCAC* | Total |
| 1 | 1A/1B - Residential | 3,392,380,292 | $ 462,543,285 | $ 85,020,200 | $ 547,563,485 |
| 2 | 2A/2B - Small Power | 957,006,510 | $ 111,916,105 | $ 23,984,600 | $ 135,900,705 |
| 3 | 3B - General Power | 1,428,703,394 | $ 123,151,613 | $ 35,817,162 | $ 158,968,775 |
| 4 | 3C - General Power (Low Load Factor) | 359,972,539 | $ 37,223,540 | $ 9,003,752 | $ 46,227,292 |
| 5 | 3D - Municipalities and Counties General Power | 108,709,528 | $ 8,607,191 | $ 2,732,076 | $ 11,339,267 |
| 6 | 3E - Municipalities and Counties General Power (Low Load Factor) | 22,956,121 | $ 2,303,000 | $ 574,999 | $ 2,878,000 |
| 7 | 3F - Non-Residential Charging Station | 9,981,810 | $ 941,870 | $ 249,983 | $ 1,191,853 |
| 8 | 4B - Large Power | 993,762,006 | $ 67,116,066 | $ 24,612,265 | $ 91,728,331 |
| 9 | 5B - Large Service for Customers >=8,000kW | - | $ - | $ - | $ - |
| 10 | 10A/10B - Irrigation | 24,480,916 | $ 2,258,961 | $ 613,543 | $ 2,872,504 |
| 11 | 11B - Water/Sewage Pumping | 166,836,465 | $ 8,035,388 | $ 4,104,759 | $ 12,140,147 |
| 12 | 15B - Universities 115kV | 73,221,947 | $ 4,258,972 | $ 1,769,350 | $ 6,028,322 |
| 13 | 30B - Manufacturing (30 MW) | 729,887,686 | $ 32,052,215 | $ 17,767,070 | $ 49,819,285 |
| 14 | 33B - Station Service | 13,530,374 | $ 1,337,400 | $ 257,619 | $ 1,595,019 |
| 15 | 35B - Large Power >=3,000kW | 304,623,175 | $ 14,292,144 | $ 7,415,197 | $ 21,707,342 |
| 16 | 36B - Special Service - Renew Energy Res | 1,207,718,596 | $ 58,169,054 | $ 31,632,902 | $ 89,801,956 |
| 17 | 6 - Private Lighting | 11,427,648 | $ 2,463,478 | $ 286,401 | $ 2,749,879 |
| 18 | 20 - Streetlighting | 30,534,240 | $ 5,439,353 | $ 765,252 | $ 6,204,606 |
| 19 | Tariff Class Totals | 9,835,733,247 | $ 942,109,637 | $ 246,607,131 | $ 1,188,716,768 |

| | | | Proposed Revenues (with Banding) | | |
|---|---|---|---|---|---|
| Line No. | Consolidated Tariff Class | PNM kWh Total | Non-Fuel | FPPCAC* | Total |
| 20 | 1A/1B - Residential | 3,392,380,292 | $ 605,786,972 | $ 46,372,354 | $ 652,159,326 |
| 21 | 2A/2B - Small Power | 957,006,510 | $ 142,401,196 | $ 13,081,860 | $ 155,483,057 |
| 22 | 3B - General Power | 1,428,703,394 | $ 156,697,171 | $ 19,535,665 | $ 176,232,836 |
| 23 | 3C - General Power (Low Load Factor) | 359,972,539 | $ 47,362,948 | $ 4,910,894 | $ 52,273,842 |
| 24 | 3D - Municipalities and Counties General Power | 108,709,528 | $ 10,977,439 | $ 1,490,149 | $ 12,467,589 |
| 25 | 3E - Municipalities and Counties General Power (Low Load Factor) | 22,956,121 | $ 2,930,320 | $ 313,620 | $ 3,243,941 |
| 26 | 3F - Non-Residential Charging Station | 9,981,810 | $ 1,256,751 | $ 136,348 | $ 1,393,099 |
| 27 | 4B - Large Power | 993,762,006 | $ 85,397,969 | $ 13,374,713 | $ 98,772,682 |
| 28 | 5B - Large Service for Customers >=8,000kW | - | $ - | $ - | $ - |
| 29 | 10A/10B - Irrigation | 24,480,916 | $ 2,942,421 | $ 334,643 | $ 3,277,064 |
| 30 | 11B - Water/Sewage Pumping | 166,836,465 | $ 10,721,739 | $ 2,230,594 | $ 12,952,333 |
| 31 | 15B - Universities 115kV | 73,221,947 | $ 5,419,084 | $ 955,057 | $ 6,374,140 |
| 32 | 30B - Manufacturing (30 MW) | 729,887,686 | $ 40,782,994 | $ 9,605,918 | $ 50,388,912 |
| 33 | 33B - Station Service | 13,530,374 | $ 1,701,698 | $ 139,057 | $ 1,840,755 |
| 34 | 35B - Large Power >=3,000kW | 304,623,175 | $ 18,185,215 | $ 4,009,090 | $ 22,194,305 |
| 35 | 36B - Special Service - Renew Energy Res | 1,207,718,596 | $ 85,514,451 | $ 17,074,758 | $ 102,589,209 |
| 36 | 6 - Private Lighting | 11,427,648 | $ 3,134,511 | $ 156,211 | $ 3,290,722 |
| 37 | 20 - Streetlighting | 30,534,240 | $ 7,225,266 | $ 417,390 | $ 7,642,655 |
| 38 | Tariff Class Totals | 9,835,733,247 | $ 1,228,438,144 | $ 134,138,322 | $ 1,362,576,466 |

* FPPCAC revenue calculated with applicable non-renewable energy determinants for fuel.

This schedule is sponsored by PNM Witness Menhorn

**Public Service Company of New Mexico**

**O-1 Total Revenue Requirements by Consolidated Rate Classification**

Test Period Ending September 30, 2028

| | | | Revenue Deficiency | | |
|---|---|---|---|---|---|
| Line No. | Consolidated Tariff Class | PNM kWh Total | Non-Fuel | FPPCAC | Total |
| 39 | 1A/1B - Residential | 3,392,380,292 | $ 143,243,687 | $ (38,647,846) | $ 104,595,841 |
| 40 | 2A/2B - Small Power | 957,006,510 | $ 30,485,091 | $ (10,902,740) | $ 19,582,352 |
| 41 | 3B - General Power | 1,428,703,394 | $ 33,545,558 | $ (16,281,497) | $ 17,264,061 |
| 42 | 3C - General Power (Low Load Factor) | 359,972,539 | $ 10,139,408 | $ (4,092,858) | $ 6,046,549 |
| 43 | 3D - Municipalities and Counties General Power | 108,709,528 | $ 2,370,248 | $ (1,241,927) | $ 1,128,322 |
| 44 | 3E - Municipalities and Counties General Power (Low Load Factor) | 22,956,121 | $ 627,320 | $ (261,379) | $ 365,941 |
| 45 | 3F - Non-Residential Charging Station | 9,981,810 | $ 314,881 | $ (113,635) | $ 201,246 |
| 46 | 4B - Large Power | 993,762,006 | $ 18,281,903 | $ (11,237,552) | $ 7,044,351 |
| 47 | 5B - Large Service for Customers >=8,000kW | - | $ - | $ - | $ - |
| 48 | 10A/10B - Irrigation | 24,480,916 | $ 683,460 | $ (278,900) | $ 404,560 |
| 49 | 11B - Water/Sewage Pumping | 166,836,465 | $ 2,686,351 | $ (1,874,165) | $ 812,186 |
| 50 | 15B - Universities 115kV | 73,221,947 | $ 1,160,111 | $ (814,293) | $ 345,819 |
| 51 | 30B - Manufacturing (30 MW) | 729,887,686 | $ 8,730,778 | $ (8,161,152) | $ 569,627 |
| 52 | 33B - Station Service | 13,530,374 | $ 364,298 | $ (118,562) | $ 245,736 |
| 53 | 35B - Large Power >=3,000kW | 304,623,175 | $ 3,893,071 | $ (3,406,108) | $ 486,963 |
| 54 | 36B - Special Service - Renew Energy Res | 1,207,718,596 | $ 27,345,397 | $ (14,558,144) | $ 12,787,253 |
| 55 | 6 - Private Lighting | 11,427,648 | $ 671,033 | $ (130,190) | $ 540,843 |
| 56 | 20 - Streetlighting | 30,534,240 | $ 1,785,912 | $ (347,863) | $ 1,438,050 |
| 57 | Tariff Class Totals | 9,835,733,247 | $ 286,328,508 | $ (112,468,809) | $ 173,859,698 |

| | | | Revenue Change in Percent | | |
|---|---|---|---|---|---|
| Line No. | Consolidated Tariff Class | PNM kWh Total | Non-Fuel | FPPCAC | Total |
| 58 | 1A/1B - Residential | 3,392,380,292 | 30.97% | -45.46% | 19.10% |
| 59 | 2A/2B - Small Power | 957,006,510 | 27.24% | -45.46% | 14.41% |
| 60 | 3B - General Power | 1,428,703,394 | 27.24% | -45.46% | 10.86% |
| 61 | 3C - General Power (Low Load Factor) | 359,972,539 | 27.24% | -45.46% | 13.08% |
| 62 | 3D - Municipalities and Counties General Power | 108,709,528 | 27.54% | -45.46% | 9.95% |
| 63 | 3E - Municipalities and Counties General Power (Low Load Factor) | 22,956,121 | 27.24% | -45.46% | 12.72% |
| 64 | 3F - Non-Residential Charging Station | 9,981,810 | 33.43% | -45.46% | 16.89% |
| 65 | 4B - Large Power | 993,762,006 | 27.24% | -45.66% | 7.68% |
| 66 | 5B - Large Service for Customers >=8,000kW | 0 | - | - | - |
| 67 | 10A/10B - Irrigation | 24,480,916 | 30.26% | -45.46% | 14.08% |
| 68 | 11B - Water/Sewage Pumping | 166,836,465 | 33.43% | -45.66% | 6.69% |
| 69 | 15B - Universities 115kV | 73,221,947 | 27.24% | -46.02% | 5.74% |
| 70 | 30B - Manufacturing (30 MW) | 729,887,686 | 27.24% | -45.93% | 1.14% |
| 71 | 33B - Station Service | 13,530,374 | 27.24% | -46.02% | 15.41% |
| 72 | 35B - Large Power >=3,000kW | 304,623,175 | 27.24% | -45.93% | 2.24% |
| 73 | 36B - Special Service - Renew Energy Res | 1,207,718,596 | 47.01% | -46.02% | 14.24% |
| 74 | 6 - Private Lighting | 11,427,648 | 27.24% | -45.46% | 19.67% |
| 75 | 20 - Streetlighting | 30,534,240 | 32.83% | -45.46% | 23.18% |
| 76 | Tariff Class Totals | 9,835,733,247 | 30.39% | -45.61% | 14.63% |

This schedule is sponsored by PNM Witness Menhorn

**Public Service Company of New Mexico**

**O-1 Total Revenue Requirements by Consolidated Rate Classification**

Test Period Ending September 30, 2028

| | Base Period | | Present Revenues | | |
|---|---|---|---|---|---|
| Line No. | Consolidated Tariff Class | PNM kWh Total | Non-Fuel | FPPCAC | Total |
| 1 | 1A/1B - Residential | 3,250,481,865 | $ 412,240,027 | $ 73,761,234 | $ 486,001,261 |
| 2 | 2A/2B - Small Power | 960,997,406 | $ 105,681,708 | $ 21,793,033 | $ 127,474,742 |
| 3 | 3B - General Power | 1,404,746,448 | $ 114,351,129 | $ 31,837,642 | $ 146,188,771 |
| 4 | 3C - General Power (Low Load Factor) | 317,813,761 | $ 31,660,745 | $ 7,214,877 | $ 38,875,622 |
| 5 | 3D - Municipalities and Counties General Power | 100,376,217 | $ 7,890,538 | $ 2,279,613 | $ 10,170,151 |
| 6 | 3E - Municipalities and Counties General Power (Low Load Factor) | 23,680,787 | $ 2,494,518 | $ 537,429 | $ 3,031,947 |
| 7 | 3F - Non-Residential Charging Station | 6,775,436 | $ 609,672 | $ 153,813 | $ 763,485 |
| 8 | 4B - Large Power | 838,553,439 | $ 54,808,606 | $ 18,994,704 | $ 73,803,310 |
| 9 | 5B - Large Service for Customers >=8,000kW ** | 11,736,480.00 | $ 1,311,200 | $ 266,533 | $ 1,577,733 |
| 10 | 10A/10B - Irrigation | 22,940,885 | $ 2,032,375 | $ 525,047 | $ 2,557,423 |
| 11 | 11B - Water/Sewage Pumping | 170,461,468 | $ 9,211,398 | $ 3,872,994 | $ 13,084,392 |
| 12 | 15B - Universities 115kV | 67,136,266 | $ 3,772,028 | $ 1,535,970 | $ 5,307,998 |
| 13 | 30B - Manufacturing (30 MW) | 621,332,201 | $ 25,440,427 | $ 14,118,438 | $ 39,558,865 |
| 14 | 33B - Station Service | 3,089,705 | $ 193,456 | $ 69,877 | $ 263,333 |
| 15 | 35B - Large Power >=3,000kW | 154,641,451 | $ 6,279,814 | $ 3,495,894 | $ 9,775,708 |
| 16 | 36B - Special Service - Renew Energy Res | 1,733,213,257 | $ 72,130,155 | $ 31,277,094 | $ 103,407,249 |
| 17 | 6 - Private Lighting | 11,456,517 | $ 2,290,091 | $ 259,810 | $ 2,549,901 |
| 18 | 20 - Streetlighting | 30,925,669 | $ 5,206,125 | $ 701,315 | $ 5,907,441 |
| 19 | Tariff Class Totals | 9,730,359,257 | $ 857,604,015 | $ 212,695,317 | $ 1,070,299,332 |

**Notes:**

** In the Base Period, Schedule 4B - Large Power and Schedules 5B were separate schedules.

This schedule is sponsored by PNM Witness Menhorn

# PNM Schedule O-2

Proof of revenue analysis

**Public Service Company of New Mexico**
**O-2 Proof of Revenue Analysis**
Test Period Ending September 30, 2028
*Summer: Jun-Aug, Non-Summer: Sep-May*

| Line No. | Schedule | Description | Units | Test Year Billing Units | Current Rate | Revenue at Current Rates | Proposed Billing Units | Proposed Rate | Proposed Revenue | Difference ($) | Difference (%) |
|---|---|---|---|---|---|---|---|---|---|---|---|
| 1 | **1A** | **Residential Service** | | | | | | | | | |
| 2 | | **1A - Standard** | | | | | | | | | |
| 3 | | Summer Customer Charge | | 1,183,383 | $ 11.93 | 14,111,926 | 1,183,383 | $ 20.13 | 23,819,625 | 9,707,700 | |
| 4 | | Non-Summer Customer Charge | | 3,519,197 | $ 11.93 | 41,966,688 | 3,519,197 | $ 20.13 | 70,835,887 | 28,869,200 | |
| 5 | | Energy Charge | | | | | | | | | |
| 6 | | Block 1 Summer | kWh | 411,363,476 | $ 0.0896783 | 36,890,389 | 411,363,476 | $ 0.1256444 | 51,685,506 | 14,795,118 | |
| 7 | | Block 2 Summer | kWh | 223,903,191 | $ 0.1486546 | 33,284,246 | 223,903,191 | $ 0.1816302 | 40,667,578 | 7,383,332 | |
| 8 | | Block 3 Summer | kWh | 179,309,414 | $ 0.1994661 | 35,766,149 | 179,309,414 | $ 0.2407165 | 43,162,737 | 7,396,588 | |
| 9 | | Block 1 Non-Summer | kWh | 1,102,166,060 | $ 0.0896783 | 98,840,405 | 1,102,166,060 | $ 0.1256444 | 138,480,958 | 39,640,553 | |
| 10 | | Block 2 Non-Summer | kWh | 402,028,479 | $ 0.1282683 | 51,567,495 | 402,028,479 | $ 0.1606396 | 64,581,702 | 13,014,207 | |
| 11 | | Block 3 Non-Summer | kWh | 238,335,230 | $ 0.1701214 | 40,545,933 | 238,335,230 | $ 0.2104638 | 50,160,938 | 9,615,005 | |
| 12 | | Summer Whole House EV Rate | kWh | 9,911,619 | $ 0.0575000 | 569,918 | 9,911,619 | $ 0.0787690 | 780,729 | 210,810 | |
| 13 | | Non-Summer Whole House EV Rate | kWh | 25,055,608 | $ 0.0575000 | 1,440,697 | 25,055,608 | $ 0.0787690 | 1,973,606 | 532,908 | |
| 14 | | | | | | | | | | | |
| 15 | | **1A - Low Income** | | | | | | | | | |
| 16 | | Summer Customer Charge | | 333,218 | $ 11.93 | 3,973,649 | 333,218 | $ - | - | (3,973,649) | |
| 17 | | Non-Summer Customer Charge | | 993,151 | $ 11.93 | 11,843,395 | 993,151 | $ - | - | (11,843,395) | |
| 18 | | Energy Charge | | | | | | | | | |
| 19 | | Block 1 Summer | kWh | 124,189,661 | $ 0.0896783 | 11,137,121 | 124,189,661 | $ 0.1256444 | 15,603,732 | 4,466,611 | |
| 20 | | Block 2 Summer | kWh | 60,352,827 | $ 0.1486546 | 8,971,727 | 60,352,827 | $ 0.1816302 | 10,961,895 | 1,990,168 | |
| 21 | | Block 3 Summer | kWh | 40,448,044 | $ 0.1994661 | 8,068,013 | 40,448,044 | $ 0.2407165 | 9,736,512 | 1,668,499 | |
| 22 | | Block 1 Non-Summer | kWh | 331,341,998 | $ 0.0896783 | 29,714,195 | 331,341,998 | $ 0.1256444 | 41,631,256 | 11,917,061 | |
| 23 | | Block 2 Non-Summer | kWh | 111,429,583 | $ 0.1282683 | 14,292,879 | 111,429,583 | $ 0.1606396 | 17,900,006 | 3,607,127 | |
| 24 | | Block 3 Non-Summer | kWh | 59,386,705 | $ 0.1701214 | 10,102,952 | 59,386,705 | $ 0.2104638 | 12,498,752 | 2,395,800 | |
| 25 | | Summer Whole House EV Rate | kWh | 1,146,204 | $ 0.0575000 | 65,907 | 1,146,204 | $ 0.0787690 | 90,285 | 24,379 | |
| 26 | | Non-Summer Whole House EV Rate | kWh | 2,802,513 | $ 0.0575000 | 161,144 | 2,802,513 | $ 0.0787690 | 220,751 | 59,607 | |
| 27 | | **Sub-Total** | | | | **453,314,829** | | | **594,792,456** | **141,477,626** | |
| 28 | | IIPR Recovery | | | | 585,513 | | | - | (585,513) | |
| 29 | | IIPR Recovery | | | | 162,188 | | | - | (162,188) | |
| 30 | | **Total Schedule 1A** | | | | **454,062,530** | | | **594,792,456** | **140,729,926** | **30.99%** |
| 31 | | **Total Schedule 1A (Base Rates Only)** | | | | **453,314,829** | | | **594,044,755** | **140,729,926** | **31.04%** |
| 32 | | | | | | | | | | | |
| 33 | **1B** | **Residential Service Time-of-Day** | | | | | | | | | |
| 34 | | Summer Customer Charge | | 25,556 | $ 11.93 | 304,886 | 25,556 | $ 20.13 | 514,407 | 209,521 | |
| 35 | | Non-Summer Customer Charge | | 71,647 | $ 11.93 | 854,745 | 71,647 | $ 20.13 | 1,442,135 | 587,390 | |
| 36 | | | | | | | | | | | |
| 37 | | **Energy Charge** | | | | | | | | | |
| 38 | | Summer On-Peak | kWh | 2,943,656 | $ 0.3751823 | 1,104,408 | 2,943,656 | $ 0.4553870 | 1,340,503 | 236,095 | |
| 39 | | Summer Off-Peak | kWh | 12,820,423 | $ 0.0931305 | 1,193,972 | 12,820,423 | $ 0.1345115 | 1,724,494 | 530,522 | |
| 40 | | Summer Super Off-Peak | kWh | 6,012,616 | $ 0.0931305 | 559,958 | 6,012,616 | $ 0.0672558 | 404,383 | (155,575) | |
| 41 | | Non-Summer On-Peak | kWh | 9,053,796 | $ 0.2131688 | 1,929,987 | 9,053,796 | $ 0.2587390 | 2,342,570 | 412,584 | |
| 42 | | Non-Summer Off-Peak | kWh | 27,555,880 | $ 0.0854760 | 2,355,366 | 27,555,880 | $ 0.1145133 | 3,155,514 | 800,148 | |
| 43 | | Non-Summer Super Off-Peak | kWh | 10,823,310 | $ 0.0854760 | 925,133 | 10,823,310 | $ 0.0763422 | 826,275 | (98,858) | |
| 44 | | **Sub-Total** | | | | **9,228,456** | | | **11,750,282** | **2,521,827** | |
| 45 | | IIPR Recovery | | | | 8,066 | | | - | (8,066) | |
| 46 | | | | | | | | | | | |
| 47 | | **Total Schedule 1B** | | | | **9,236,522** | | | **11,750,282** | **2,513,761** | **27.22%** |
| 48 | | **Total Schedule 1B (Base Rates Only)** | | | | **9,228,456** | | | **11,742,217** | **2,513,761** | **27.24%** |
| 49 | | | | | | | | | | | |
| 50 | **2A** | **Small Power Service** | | | | | | | | | |
| 51 | | Summer Customer Charge | | 165,938 | $ 23.61 | 3,918,565 | 165,938 | $ 30.05 | 4,985,952 | 1,067,387 | |
| 52 | | Non-Summer Customer Charge | | 495,055 | $ 23.61 | 11,690,516 | 495,055 | $ 30.05 | 14,874,923 | 3,184,407 | |
| 53 | | Energy Charge | | | | | | $ - | | | |
| 54 | | Summer | kWh | 277,924,661 | $ 0.1172758 | 32,593,833 | 277,924,661 | $ 0.1494267 | 41,529,359 | 8,935,526 | |
| 55 | | Non-Summer | kWh | 659,035,058 | $ 0.0934073 | 61,558,698 | 659,035,058 | $ 0.1190147 | 78,434,876 | 16,876,178 | |
| 56 | | **Sub-Total** | | | | **109,761,611** | | | **139,825,110** | **30,063,499** | |
| 57 | | IIPR Recovery | | | | 165,275 | | | - | (165,275) | |
| 58 | | | | | | | | | | | |
| 59 | | **Total Schedule 2A** | | | | **109,926,886** | | | **139,825,110** | **29,898,224** | **27.20%** |
| 60 | | **Total Schedule 2A (Base Rates Only)** | | | | **109,761,611** | | | **139,659,835** | **29,898,224** | **27.24%** |
| 61 | | | | | | | | | | | |
| 62 | **2B** | **Small Power Service Time-of-Day** | | | | | | | | | |
| 63 | | Summer Customer Charge | | 1,603 | $ 23.61 | 37,846 | 1,603 | $ 30.05 | 48,164 | 10,318 | |
| 64 | | Non-Summer Customer Charge | | 4,659 | $ 23.61 | 109,995 | 4,659 | $ 30.05 | 139,984 | 29,989 | |
| 65 | | Energy Charge | | | | | | | | | |
| 66 | | Summer On-Peak | kWh | 989,988 | $ 0.2650882 | 262,434 | 989,988 | $ 0.3375779 | 334,198 | 71,764 | |
| 67 | | Summer Off-Peak | kWh | 3,222,781 | $ 0.1322264 | 426,137 | 3,222,781 | $ 0.1683844 | 542,666 | 116,529 | |
| 68 | | Summer Super Off-Peak | kWh | 2,300,755 | $ 0.0665954 | 153,220 | 2,300,755 | $ 0.0848062 | 195,118 | 41,899 | |
| 69 | | Non-Summer On-Peak | kWh | 2,585,377 | $ 0.1381114 | 357,070 | 2,585,377 | $ 0.1758786 | 454,713 | 97,643 | |

**Public Service Company of New Mexico**
**O-2 Proof of Revenue Analysis**
Test Period Ending September 30, 2028
*Summer: Jun-Aug, Non-Summer: Sep-May*

| Line No. | Schedule | Description | Units | Test Year Billing Units | Current Rate | Revenue at Current Rates | Proposed Billing Units | Proposed Rate | Proposed Revenue | Difference ($) | Difference (%) |
|---|---|---|---|---|---|---|---|---|---|---|---|
| 70 | | Non-Summer Off-Peak | kWh | 6,358,048 | $ 0.0865132 | 550,055 | 6,358,048 | $ 0.1101707 | 700,470 | 150,415 | |
| 71 | | Non-Summer Super Off-Peak | kWh | 4,589,843 | $ 0.0561538 | 257,737 | 4,589,843 | $ 0.0715093 | 328,217 | 70,479 | |
| 72 | | **Sub-Total** | | | | **2,154,494** | | | **2,743,530** | **589,036** | |
| 73 | | IIPR Recovery | | | | 2,169 | | | - | (2,169) | |
| 74 | | | | | | | | | | | |
| 75 | | **Total Schedule 2B** | | | | **2,156,662** | | | **2,743,530** | **586,868** | **27.21%** |
| 76 | | **Total Schedule 2B (Base Rates Only)** | | | | **2,154,494** | | | **2,741,361** | **586,868** | **27.24%** |
| 77 | | | | | | | | | | | |
| 78 | **3B** | **General Power Service Time-of-Use** | | | | | | | | | |
| 79 | | Summer Customer Charge-Primary | | 256 | $ 109.46 | 28,026 | 256 | $ 139.27 | 35,659 | 7,634 | |
| 80 | | Non-Summer Customer Charge-Primary | | 764 | $ 109.46 | 83,620 | 764 | $ 139.27 | 106,397 | 22,777 | |
| 81 | | Summer Customer Charge-Secondary | | 8,239 | $ 109.46 | 901,843 | 8,239 | $ 139.27 | 1,147,499 | 245,655 | |
| 82 | | Non-Summer Customer Charge-Secondary | | 24,553 | $ 109.46 | 2,687,477 | 24,553 | $ 139.27 | 3,419,526 | 732,048 | |
| 83 | | Demand Charge | | | | | | | | | |
| 84 | | Primary- Summer kW | kW | 68,512 | $ 36.79 | 2,520,363 | 68,512 | $ 46.80 | 3,206,191 | 685,828 | |
| 85 | | Primary- Non- Summer kW | kW | 188,019 | $ 27.33 | 5,139,340 | 188,019 | $ 34.77 | 6,537,831 | 1,398,491 | |
| 86 | | Secondary- Summer kW | kW | 978,211 | $ 37.27 | 36,457,862 | 978,211 | $ 47.41 | 46,378,587 | 9,920,725 | |
| 87 | | Secondary- Non- Summer kW | kW | 2,464,144 | $ 27.83 | 68,581,379 | 2,464,144 | $ 35.41 | 87,243,389 | 18,662,010 | |
| 88 | | Energy Charge | | | | | | | | | |
| 89 | | Primary Summer On-Peak | kWh | 12,132,392 | $ 0.0074003 | 89,784 | 12,132,392 | $ 0.0097284 | 118,029 | 28,245 | |
| 90 | | Primary Summer Off-Peak | kWh | 17,214,624 | $ 0.0034453 | 59,309 | 17,214,624 | $ 0.0045291 | 77,967 | 18,658 | |
| 91 | | Primary Summer Super Off-Peak | kWh | - | $ - | - | - | $ - | - | - | |
| 92 | | Primary Non-Summer On-Peak | kWh | 31,852,944 | $ 0.0061305 | 195,276 | 31,852,944 | $ 0.0080592 | 256,709 | 61,433 | |
| 93 | | Primary Non-Summer Off-Peak | kWh | 47,272,329 | $ 0.0034453 | 162,865 | 47,272,329 | $ 0.0045291 | 214,102 | 51,237 | |
| 94 | | Primary Non-Summer Super Off-Peak | kWh | - | $ - | - | - | $ - | - | - | |
| 95 | | Secondary Summer On-Peak | kWh | 161,969,710 | $ 0.0074003 | 1,198,628 | 161,969,710 | $ 0.0097284 | 1,575,709 | 377,082 | |
| 96 | | Secondary Summer Off-Peak | kWh | 221,080,131 | $ 0.0034453 | 761,678 | 221,080,131 | $ 0.0045291 | 1,001,298 | 239,620 | |
| 97 | | Secondary Summer Super Off-Peak | kWh | - | $ - | - | - | $ - | - | - | |
| 98 | | Secondary Non-Summer On-Peak | kWh | 381,357,348 | $ 0.0061305 | 2,337,930 | 381,357,348 | $ 0.0080592 | 3,073,430 | 735,500 | |
| 99 | | Secondary Non-Summer Off-Peak | kWh | 555,823,917 | $ 0.0034453 | 1,914,957 | 555,823,917 | $ 0.0045291 | 2,517,392 | 602,435 | |
| 100 | | Secondary Non-Summer Super Off-Peak | kWh | - | $ - | - | - | | - | - | |
| 101 | | Other Charges | | | | | | | | | |
| 102 | | Primary - Billable RkVA Summer | kVAR | 7,748 | $ 0.27 | 2,092 | 7,748 | $ 0.27 | 2,092 | - | |
| 103 | | Primary - Billable RkVA Non-Summer | kVAR | 17,277 | $ 0.27 | 4,665 | 17,277 | $ 0.27 | 4,665 | - | |
| 104 | | Secondary - Billable RkVA Summer | kVAR | 28,437 | $ 0.27 | 7,678 | 28,437 | $ 0.27 | 7,678 | - | |
| 105 | | Secondary - Billable RkVA Non-Summer | kVAR | 62,378 | $ 0.27 | 16,842 | 62,378 | $ 0.27 | 16,842 | - | |
| 106 | | **Sub-Total** | | | | **123,151,613** | | | **156,940,990** | **33,789,377** | |
| 107 | | IIPR Recovery | | | | 243,819 | | | - | (243,819) | |
| 108 | | | | | | | | | | | |
| 109 | | **Total Schedule 3B** | | | | **123,395,432** | | | **156,940,990** | **33,545,558** | **27.19%** |
| 110 | | **Total Schedule 3B (Base Rates Only)** | | | | **123,151,613** | | | **156,697,171** | **33,545,558** | **27.24%** |
| 111 | | | | | | | | | | | |
| 112 | **3C** | **General Power Service (Low Load Factor) Time-of-Use** | | | | | | | | | |
| 113 | | Summer Customer Charge-Primary | | 68 | $ 77.20 | 5,281 | 68 | $ 98.22 | 6,720 | 1,439 | |
| 114 | | Non-Summer Customer Charge-Primary | | 204 | $ 77.20 | 15,758 | 204 | $ 98.22 | 20,051 | 4,292 | |
| 115 | | Summer Customer Charge-Secondary | | 3,771 | $ 77.20 | 291,118 | 3,771 | $ 98.22 | 370,416 | 79,298 | |
| 116 | | Non-Summer Customer Charge-Secondary | | 11,238 | $ 77.20 | 867,540 | 11,238 | $ 98.22 | 1,103,851 | 236,311 | |
| 117 | | Demand Charge | | | | | | | | | |
| 118 | | Primary Summer | kW | 16,515 | $ 16.60 | 274,191 | 16,515 | $ 21.11 | 348,645 | 74,453 | |
| 119 | | Primary Non-Summer | kW | 48,889 | $ 12.22 | 597,522 | 48,889 | $ 15.54 | 759,772 | 162,250 | |
| 120 | | Secondary Summer | kW | 402,227 | $ 17.31 | 6,961,523 | 402,227 | $ 22.01 | 8,851,844 | 1,890,321 | |
| 121 | | Secondary Non-Summer | kW | 997,718 | $ 12.93 | 12,897,683 | 997,718 | $ 16.44 | 16,399,900 | 3,502,217 | |
| 122 | | Energy Charge | | | | | | | | | |
| 123 | | Primary Summer On-Peak | kWh | 2,866,231 | $ 0.0674597 | 193,355 | 2,866,231 | $ 0.0861821 | 247,018 | 53,663 | |
| 124 | | Primary Summer Off-Peak | kWh | 2,262,453 | $ 0.0304027 | 68,785 | 2,262,453 | $ 0.0388405 | 87,875 | 19,090 | |
| 125 | | Primary Summer Super Off-Peak | kWh | - | $ - | - | - | $ - | - | - | |
| 126 | | Primary Non-Summer On-Peak | kWh | 8,827,397 | $ 0.0508175 | 448,586 | 8,827,397 | $ 0.0649211 | 573,085 | 124,498 | |
| 127 | | Primary Non-Summer Off-Peak | kWh | 7,440,311 | $ 0.0304027 | 226,206 | 7,440,311 | $ 0.0388405 | 288,986 | 62,780 | |
| 128 | | Primary Non-Summer Super Off-Peak | kWh | - | $ - | - | - | $ - | - | - | |
| 129 | | Secondary Summer On-Peak | kWh | 47,278,162 | $ 0.0674597 | 3,189,370 | 47,278,162 | $ 0.0861821 | 4,074,531 | 885,161 | |
| 130 | | Secondary Summer Off-Peak | kWh | 51,526,339 | $ 0.0304027 | 1,566,540 | 51,526,339 | $ 0.0388405 | 2,001,310 | 434,770 | |
| 131 | | Secondary Summer Super Off-Peak | kWh | - | $ - | - | - | $ - | - | - | |
| 132 | | Secondary Non-Summer On-Peak | kWh | 113,284,166 | $ 0.0508175 | 5,756,818 | 113,284,166 | $ 0.0649211 | 7,354,537 | 1,597,718 | |
| 133 | | Secondary Non-Summer Off-Peak | kWh | 126,487,480 | $ 0.0304027 | 3,845,561 | 126,487,480 | $ 0.0388405 | 4,912,839 | 1,067,278 | |
| 134 | | Secondary Non-Summer Super Off-Peak | kWh | - | $ - | - | - | $ - | - | - | |
| 135 | | Other Charges | | | | | | | | | |
| 136 | | Primary Billable RkVA Summer | kVAR | 2,016 | $ 0.27 | 544 | 2,016 | $ 0.27 | 544 | - | |
| 137 | | Primary Billable RkVA Non-Summer | kVAR | 6,918 | $ 0.27 | 1,868 | 6,918 | $ 0.27 | 1,868 | - | |
| 138 | | Secondary Billable RkVA Summer | kVAR | 16,668 | $ 0.27 | 4,500 | 16,668 | $ 0.27 | 4,500 | - | |

**Public Service Company of New Mexico**
**O-2 Proof of Revenue Analysis**
Test Period Ending September 30, 2028
*Summer: Jun-Aug, Non-Summer: Sep-May*

| Line No. | Schedule | Description | Units | Test Year Billing Units | Current Rate | Revenue at Current Rates | Proposed Billing Units | Proposed Rate | Proposed Revenue | Difference ($) | Difference (%) |
|---|---|---|---|---|---|---|---|---|---|---|---|
| 139 | | Secondary Billable RkVA Non-Summer | kVAR | 39,962 | $ 0.27 | 10,790 | 39,962 | $ 0.27 | 10,790 | - | |
| 140 | | **Sub-Total** | | | | **37,223,540** | | | **47,419,080** | **10,195,540** | |
| 141 | | IIPR Recovery | | | | 56,132 | | | - | (56,132) | |
| 142 | | | | | | | | | | | |
| 143 | | **Total Schedule 3C** | | | | **37,279,672** | | | **47,419,080** | **10,139,408** | **27.20%** |
| 144 | | **Total Schedule 3C (Base Rates Only)** | | | | **37,223,540** | | | **47,362,948** | **10,139,408** | **27.24%** |
| 145 | | | | | | | | | | | |
| 146 | **3D** | **General Power Service Time-of-Use** | | | | | | | | | |
| 147 | | Summer Customer Charge-Primary | | 24 | $ 106.67 | 2,570 | 24 | $ 125.26 | 3,018 | 448 | |
| 148 | | Non-Summer Customer Charge-Primary | | 72 | $ 106.67 | 7,669 | 72 | $ 125.26 | 9,006 | 1,337 | |
| 149 | | Summer Customer Charge-Secondary | | 481 | $ 106.67 | 51,292 | 481 | $ 125.26 | 60,232 | 8,940 | |
| 150 | | Non-Summer Customer Charge-Secondary | | 1,433 | $ 106.67 | 152,847 | 1,433 | $ 125.26 | 179,487 | 26,640 | |
| 151 | | Demand Charge | | | | | | | | | |
| 152 | | Primary Summer | kW | 6,642 | $ 31.83 | 211,389 | 6,642 | $ 46.26 | 307,225 | 95,836 | |
| 153 | | Primary Non-Summer | kW | 16,802 | $ 23.65 | 397,358 | 16,802 | $ 34.37 | 577,506 | 180,148 | |
| 154 | | Secondary Summer | kW | 69,622 | $ 32.25 | 2,245,040 | 69,622 | $ 46.87 | 3,262,860 | 1,017,820 | |
| 155 | | Secondary Non-Summer | kW | 175,268 | $ 24.08 | 4,220,471 | 175,268 | $ 35.00 | 6,133,881 | 1,913,409 | |
| 156 | | Energy Charge | | | | | | | | | |
| 157 | | Primary Summer On-Peak | kWh | 913,267 | $ 0.0195882 | 17,889 | 913,267 | $ 0.0068229 | 6,231 | (11,658) | |
| 158 | | Primary Summer Off-Peak | kWh | 1,672,741 | $ 0.0091194 | 15,254 | 1,672,741 | $ 0.0031764 | 5,313 | (9,941) | |
| 159 | | Primary Summer Super Off-Peak | kWh | - | $ - | - | - | $ - | - | - | |
| 160 | | Primary Non-Summer On-Peak | kWh | 2,242,229 | $ 0.0162272 | 36,385 | 2,242,229 | $ 0.0056522 | 12,673 | (23,712) | |
| 161 | | Primary Non-Summer Off-Peak | kWh | 4,676,782 | $ 0.0091194 | 42,649 | 4,676,782 | $ 0.0031764 | 14,855 | (27,794) | |
| 162 | | Primary Non-Summer Super Off-Peak | kWh | - | $ - | - | - | $ - | - | - | |
| 163 | | Secondary Summer On-Peak | kWh | 10,924,522 | $ 0.0195882 | 213,992 | 10,924,522 | $ 0.0068229 | 74,537 | (139,455) | |
| 164 | | Secondary Summer Off-Peak | kWh | 17,249,556 | $ 0.0091194 | 157,305 | 17,249,556 | $ 0.0031764 | 54,792 | (102,513) | |
| 165 | | Secondary Summer Super Off-Peak | kWh | - | $ - | - | - | $ - | - | - | |
| 166 | | Secondary Non-Summer On-Peak | kWh | 25,933,326 | $ 0.0162272 | 420,825 | 25,933,326 | $ 0.0056522 | 146,580 | (274,245) | |
| 167 | | Secondary Non-Summer Off-Peak | kWh | 45,097,104 | $ 0.0091194 | 411,258 | 45,097,104 | $ 0.0031764 | 143,248 | (268,010) | |
| 168 | | Secondary Non-Summer Super Off-Peak | kWh | - | $ - | - | - | $ - | - | - | |
| 169 | | Other Charges | | | | | - | | | | |
| 170 | | Primary Billable RkVA Summer | kVAR | 861 | $ 0.27 | 232 | 861 | $ 0.27 | 232 | - | |
| 171 | | Primary Billable RkVA Non-Summer | kVAR | 1,920 | $ 0.27 | 519 | 1,920 | $ 0.27 | 519 | - | |
| 172 | | Secondary Billable RkVA Summer | kVAR | 2,587 | $ 0.27 | 699 | 2,587 | $ 0.27 | 699 | - | |
| 173 | | Secondary Billable RkVA Non-Summer | kVAR | 5,729 | $ 0.27 | 1,547 | 5,729 | $ 0.27 | 1,547 | - | |
| 174 | | **Sub-Total** | | | | **8,607,191** | | | **10,994,441** | **2,387,250** | |
| 175 | | IIPR Recovery | | | | 17,002 | | | - | (17,002) | |
| 176 | | | | | | | | | | | |
| 177 | | **Total Schedule 3D** | | | | **8,624,193** | | | **10,994,441** | **2,370,248** | **27.48%** |
| 178 | | **Total Schedule 3D (Base Rates Only)** | | | | **8,607,191** | | | **10,977,439** | **2,370,248** | **27.54%** |
| 179 | | | | | | | | | | | |
| 180 | **3E** | **General Power Service (Low Load Factor) Time-of-Use** | | | | | | | | | |
| 181 | | Summer Customer Charge-Primary | | 15 | $ 77.20 | 1,163 | 15 | $ 98.22 | 1,479 | 317 | |
| 182 | | Non-Summer Customer Charge-Primary | | 45 | $ 77.20 | 3,469 | 45 | $ 98.22 | 4,414 | 945 | |
| 183 | | Summer Customer Charge-Secondary | | 205 | $ 77.20 | 15,792 | 205 | $ 98.22 | 20,094 | 4,302 | |
| 184 | | Non-Summer Customer Charge-Secondary | | 610 | $ 77.20 | 47,058 | 610 | $ 98.22 | 59,876 | 12,818 | |
| 185 | | Demand Charge | | | | | | | | | |
| 186 | | Primary Summer | kW | 3,131 | $ 16.60 | 51,985 | 3,131 | $ 21.11 | 66,096 | 14,111 | |
| 187 | | Primary Non-Summer | kW | 9,265 | $ 12.22 | 113,242 | 9,265 | $ 15.54 | 143,981 | 30,740 | |
| 188 | | Secondary Summer | kW | 22,198 | $ 17.31 | 384,182 | 22,198 | $ 22.01 | 488,470 | 104,287 | |
| 189 | | Secondary Non-Summer | kW | 60,337 | $ 12.93 | 779,969 | 60,337 | $ 16.44 | 991,694 | 211,725 | |
| 190 | | Energy Charge | | | | | | | | | |
| 191 | | Primary Summer On-Peak | kWh | 353,997 | $ 0.0674957 | 23,893 | 353,997 | $ 0.0862673 | 30,538 | 6,645 | |
| 192 | | Primary Summer Off-Peak | kWh | 439,584 | $ 0.0304189 | 13,372 | 439,584 | $ 0.0388789 | 17,091 | 3,719 | |
| 193 | | Primary Summer Super Off-Peak | kWh | - | $ - | - | - | $ - | - | - | |
| 194 | | Primary Non-Summer On-Peak | kWh | 1,018,377 | $ 0.0508446 | 51,779 | 1,018,377 | $ 0.0649853 | 66,180 | 14,401 | |
| 195 | | Primary Non-Summer Off-Peak | kWh | 1,323,722 | $ 0.0304189 | 40,266 | 1,323,722 | $ 0.0388789 | 51,465 | 11,199 | |
| 196 | | Primary Non-Summer Super Off-Peak | kWh | - | $ - | - | - | $ - | - | - | |
| 197 | | Secondary Summer On-Peak | kWh | 2,194,083 | $ 0.0674957 | 148,091 | 2,194,083 | $ 0.0862673 | 189,278 | 41,187 | |
| 198 | | Secondary Summer Off-Peak | kWh | 4,083,205 | $ 0.0304189 | 124,207 | 4,083,205 | $ 0.0388789 | 158,751 | 34,544 | |
| 199 | | Secondary Summer Super Off-Peak | kWh | - | $ - | - | - | $ - | - | - | |
| 200 | | Secondary Non-Summer On-Peak | kWh | 4,470,679 | $ 0.0508446 | 227,310 | 4,470,679 | $ 0.0649853 | 290,529 | 63,219 | |
| 201 | | Secondary Non-Summer Off-Peak | kWh | 9,072,475 | $ 0.0304189 | 275,975 | 9,072,475 | $ 0.0388789 | 352,728 | 76,753 | |
| 202 | | Secondary Non-Summer Super Off-Peak | kWh | - | $ - | - | - | $ - | - | - | |
| 203 | | Other Charges | | | | | | | | | |
| 204 | | Primary Billable RkVA Summer | kVAR | 464 | $ 0.27 | 125 | 464 | $ 0.27 | 125 | - | |
| 205 | | Primary Billable RkVA Non-Summer | kVAR | 1,374 | $ 0.27 | 371 | 1,374 | $ 0.27 | 371 | - | |
| 206 | | Secondary Billable RkVA Summer | kVAR | 713 | $ 0.27 | 192 | 713 | $ 0.27 | 192 | - | |
| 207 | | Secondary Billable RkVA Non-Summer | kVAR | 2,074 | $ 0.27 | 560 | 2,074 | $ 0.27 | 560 | - | |

**Public Service Company of New Mexico**
**O-2 Proof of Revenue Analysis**
Test Period Ending September 30, 2028
*Summer: Jun-Aug, Non-Summer: Sep-May*

| Line No. | Schedule | Description | Units | Test Year Billing Units | | Current Rate | Revenue at Current Rates | Proposed Billing Units | | Proposed Rate | Proposed Revenue | Difference ($) | Difference (%) |
|---|---|---|---|---|---|---|---|---|---|---|---|---|---|
| 208 | | **Sub-Total** | | | | | **2,303,000** | | | | **2,933,911** | **630,911** | |
| 209 | | IIPR Recovery | | | | | 3,591 | | | | - | (3,591) | |
| 210 | | | | | | | | | | | | | |
| 211 | | **Total Schedule 3E** | | | | | **2,306,591** | | | | **2,933,911** | **627,320** | **27.20%** |
| 212 | | **Total Schedule 3E (Base Rates Only)** | | | | | **2,303,000** | | | | **2,930,320** | **627,320** | **27.24%** |
| 213 | | | | | | | | | | | | | |
| 214 | **3F** | **Commercial Charging Station** | | | | | | | | | | | |
| 215 | | Summer Customer Charge | | 72 | $ | 77.20 | 5,550 | 72 | $ | 103.00 | 7,405 | 1,855 | |
| 216 | | Non-Summer Customer Charge | | 198 | $ | 77.20 | 15,292 | 198 | $ | 103.00 | 20,404 | 5,112 | |
| 217 | | Energy Charge | | | | | | | | | | | |
| 218 | | Summer On-Peak | kWh | 672,477 | $ | 0.1997250 | 134,311 | 672,477 | $ | 0.2668001 | 179,417 | 45,106 | |
| 219 | | Summer Off-Peak | kWh | 1,985,536 | $ | 0.0687672 | 136,540 | 1,985,536 | $ | 0.0918618 | 182,395 | 45,855 | |
| 220 | | Non-Summer On-Peak | kWh | 1,852,921 | $ | 0.1478538 | 273,961 | 1,852,921 | $ | 0.1975086 | 365,968 | 92,006 | |
| 221 | | Non-Summer Off-Peak | kWh | 5,470,876 | $ | 0.0687672 | 376,217 | 5,470,876 | $ | 0.0918618 | 502,564 | 126,348 | |
| 222 | | **Sub-Total** | | | | | **941,870** | | | | **1,258,153** | **316,283** | |
| 223 | | IIPR Recovery | | | | | 1,402 | | | | - | (1,402) | |
| 224 | | | | | | | | | | | | | |
| 225 | | **Total Schedule 3F** | | | | | **943,272** | | | | **1,258,153** | **314,881** | **33.38%** |
| 226 | | **Total Schedule 3F (Base Rates Only)** | | | | | **941,870** | | | | **1,256,751** | **314,881** | **33.43%** |
| 227 | | | | | | | | | | | | | |
| 228 | **4B** | **Large Power Service Time-of-Use** | | | | | | | | | | | |
| 229 | | Summer Customer Charge Primary | | 285 | $ | 712.98 | 203,386 | 285 | $ | 921.41 | 262,841 | 59,455 | |
| 230 | | Non-Summer Customer Charge Primary | | 851 | $ | 712.98 | 606,992 | 851 | $ | 921.41 | 784,432 | 177,440 | |
| 231 | | Summer Customer Charge Secondary | | 190 | $ | 712.98 | 135,428 | 190 | $ | 921.41 | 175,018 | 39,589 | |
| 232 | | Non-Summer Customer Charge Secondary | | 567 | $ | 712.98 | 404,177 | 567 | $ | 921.41 | 522,329 | 118,152 | |
| 233 | | Summer Customer Charge Transmission | | 3 | $ | 2,486.72 | 7,491 | 3 | $ | 921.41 | 2,776 | (4,715) | |
| 234 | | Non-Summer Customer Charge Transmission | | 9 | $ | 2,486.72 | 22,350 | 9 | $ | 921.41 | 8,281 | (14,069) | |
| 235 | | Demand Charge | | | | | | | | | | | |
| 236 | | Primary Summer | kW | 392,395 | $ | 30.41 | 11,933,296 | 392,395 | $ | 38.67 | 15,173,935 | 3,240,639 | |
| 237 | | Primary Non-Summer | kW | 1,072,763 | $ | 21.17 | 22,708,911 | 1,072,763 | $ | 26.92 | 28,875,807 | 6,166,895 | |
| 238 | | Secondary Summer | kW | 168,617 | $ | 32.88 | 5,543,486 | 168,617 | $ | 41.80 | 7,048,891 | 1,505,405 | |
| 239 | | Secondary Non-Summer | kW | 456,842 | $ | 23.62 | 10,790,859 | 456,842 | $ | 30.03 | 13,721,254 | 2,930,396 | |
| 240 | | Transmission Summer | kW | 10,984 | $ | 11.97 | 131,453 | 10,984 | $ | 15.22 | 167,150 | 35,698 | |
| 241 | | Transmission Non-Summer | kW | 32,032 | $ | 7.27 | 232,879 | 32,032 | $ | 9.24 | 296,121 | 63,241 | |
| 242 | | Energy Charge | | | | | | | | | | | |
| 243 | | Summer On-Peak Primary | kWh | 73,014,077 | $ | 0.0219922 | 1,605,739 | 73,014,077 | $ | 0.0289634 | 2,114,733 | 508,994 | |
| 244 | | Summer Off-Peak Primary | kWh | 118,072,641 | $ | 0.0114216 | 1,348,583 | 118,072,641 | $ | 0.0149844 | 1,769,242 | 420,659 | |
| 245 | | Summer Super Off-Peak Primary | kWh | - | $ | - | - | - | $ | - | - | - | |
| 246 | | Non-Summer On-Peak Primary | kWh | 194,272,867 | $ | 0.0172695 | 3,354,994 | 194,272,867 | $ | 0.0226764 | 4,405,414 | 1,050,420 | |
| 247 | | Non-Summer Off-Peak Primary | kWh | 321,098,832 | $ | 0.0114216 | 3,667,475 | 321,098,832 | $ | 0.0149955 | 4,815,037 | 1,147,562 | |
| 248 | | Non-Summer Super Off-Peak Primary | kWh | - | $ | - | - | - | $ | - | - | - | |
| 249 | | Summer On-Peak Secondary | kWh | 30,084,133 | $ | 0.0219922 | 661,616 | 30,084,133 | $ | 0.0289634 | 871,338 | 209,722 | |
| 250 | | Summer Off-Peak Secondary | kWh | 46,559,491 | $ | 0.0114216 | 531,786 | 46,559,491 | $ | 0.0149844 | 697,664 | 165,878 | |
| 251 | | Summer Super Off-Peak Secondary | kWh | - | $ | - | - | - | $ | - | - | - | |
| 252 | | Non-Summer On-Peak Secondary | kWh | 76,884,472 | $ | 0.0172695 | 1,327,756 | 76,884,472 | $ | 0.0226764 | 1,743,465 | 415,709 | |
| 253 | | Non-Summer Off-Peak Secondary | kWh | 122,744,613 | $ | 0.0114216 | 1,401,945 | 122,744,613 | $ | 0.0149955 | 1,840,617 | 438,672 | |
| 254 | | Non-Summer Super Off-Peak Secondary | kWh | - | $ | - | - | - | $ | - | - | - | |
| 255 | | Summer On-Peak Transmission | kWh | 1,094,778 | $ | 0.0721001 | 78,934 | 1,094,778 | $ | 0.0289634 | 31,708 | (47,225) | |
| 256 | | Summer Off-Peak Transmission | kWh | 1,853,237 | $ | 0.0319507 | 59,212 | 1,853,237 | $ | 0.0149844 | 27,770 | (31,443) | |
| 257 | | Summer Super Off-Peak Transmission | kWh | - | $ | - | - | - | $ | - | - | - | |
| 258 | | Non-Summer On-Peak Transmission | kWh | 2,894,871 | $ | 0.0514602 | 148,971 | 2,894,871 | $ | 0.0226764 | 65,645 | (83,325) | |
| 259 | | Non-Summer Off-Peak Transmission | kWh | 5,187,994 | $ | 0.0319507 | 165,760 | 5,187,994 | $ | 0.0149955 | 77,797 | (87,963) | |
| 260 | | Non-Summer Super Off-Peak Transmission | kWh | - | $ | - | - | - | $ | - | - | - | |
| 261 | | Other Charges | | | | | | | | | | | |
| 262 | | Billable RkVA Summer Primary | kVAR | 34,668 | $ | 0.27 | 9,360 | 34,668 | $ | 0.27 | 9,360 | - | |
| 263 | | Billable RkVA Non-Summer Primary | kVAR | 83,323 | $ | 0.27 | 22,497 | 83,323 | $ | 0.27 | 22,497 | - | |
| 264 | | Billable RkVA Summer Secondary | kVAR | 11,880 | $ | 0.27 | 3,208 | 11,880 | $ | 0.27 | 3,208 | - | |
| 265 | | Billable RkVA Non-Summer Secondary | kVAR | 27,872 | $ | 0.27 | 7,525 | 27,872 | $ | 0.27 | 7,525 | - | |
| 266 | | Billable RkVA Summer Transmission | kVAR | - | $ | 0.27 | - | - | $ | 0.27 | - | - | |
| 267 | | Billable RkVA Non-Summer Transmission | kVAR | - | $ | 0.27 | - | - | $ | 0.27 | - | - | |
| 268 | | **Sub-Total** | | | | | **67,116,066** | | | | **85,541,853** | **18,425,787** | |
| 269 | | IIPR Recovery | | | | | 143,884 | | | | - | (143,884) | |
| 270 | | | | | | | | | | | | | |
| 271 | | **Total Schedule 4B** | | | | | **67,259,950** | | | | **85,541,853** | **18,281,903** | **27.18%** |
| 272 | | **Total Schedule 4B (Base Rates Only)** | | | | | **67,116,066** | | | | **85,397,969** | **18,281,903** | **27.24%** |
| 273 | | | | | | | | | | | | | |
| 274 | **5B** | **Large Service for Customers >= 8,000 kW min. at 115 kV, 69 kV or 34.5 k** | | | | | | | | | | | |
| 275 | | Summer Customer Charge | | - | $ | 2,486.72 | - | - | | - | - | - | |

**Public Service Company of New Mexico**
**O-2 Proof of Revenue Analysis**
Test Period Ending September 30, 2028
*Summer: Jun-Aug, Non-Summer: Sep-May*

| Line No. | Schedule | Description | Units | Test Year Billing Units | Current Rate | Revenue at Current Rates | Proposed Billing Units | Proposed Rate | Proposed Revenue | Difference ($) | Difference (%) |
|---|---|---|---|---|---|---|---|---|---|---|---|
| 276 | | Non-Summer Customer Charge | | - | $ 2,486.72 | - | - | - | - | - | |
| 277 | | Demand Charge | | | | | | | | | |
| 278 | | Summer | kW | - | $ 11.97 | - | - | - | - | - | |
| 279 | | Non-Summer | kW | - | $ 7.27 | - | - | - | - | - | |
| 280 | | Energy Charge | | | | | | | | | |
| 281 | | Summer On-Peak | kWh | - | $ 0.0721001 | - | - | - | - | - | |
| 282 | | Summer Off-Peak | kWh | - | $ 0.0319507 | - | - | - | - | - | |
| 283 | | Non-Summer On-Peak | kWh | - | $ 0.0514602 | - | - | - | - | - | |
| 284 | | Non-Summer Off-Peak | kWh | - | $ 0.0319507 | - | - | - | - | - | |
| 285 | | Other Charges | | | | | | | | | |
| 286 | | Billable RkVA Summer | kVAR | - | $ 0.27 | - | - | - | - | - | |
| 287 | | Billable RkVA Non-Summer | kVAR | - | $ 0.27 | - | - | - | - | - | |
| 288 | | **Sub-Total** | | | | **-** | | | **-** | **-** | |
| 289 | | IIPR Recovery | | | | - | | | - | - | |
| 290 | | | | | | | | | | | |
| 291 | | **Total Schedule 5B** | | | | **-** | | | **-** | **-** | |
| 292 | | **Total Schedule 5B (Base Rates Only)** | | | | **-** | | | **-** | **-** | |
| 293 | | | | | | | | | | | |
| 294 | **10A** | **Irrigation Service** | | | | | | | | | |
| 295 | | Summer Customer Charge | | 330 | $ 17.47 | 5,756 | 330 | $ 34.93 | 11,512 | 5,756 | |
| 296 | | Non-Summer Customer Charge | | 983 | $ 17.47 | 17,173 | 983 | $ 34.93 | 34,346 | 17,173 | |
| 297 | | Energy Charge | | | | | | | | | |
| 298 | | Summer | kWh | 1,610,427 | $ 0.0928618 | 149,547 | 1,610,427 | $ 0.1168008 | 188,099 | 38,552 | |
| 299 | | Non-Summer | kWh | 2,291,253 | $ 0.0846293 | 193,907 | 2,291,253 | $ 0.1064460 | 243,895 | 49,988 | |
| 300 | | **Sub-Total** | | | | **366,384** | | | **477,853** | **111,469** | |
| 301 | | IIPR Recovery | | | | 618 | | | - | (618) | |
| 302 | | **Total Schedule 10A** | | | | **367,002** | | | **477,853** | **110,851** | **30.20%** |
| 303 | | **Total Schedule 10A (Base Rates Only)** | | | | **366,384** | | | **477,235** | **110,851** | **30.26%** |
| 304 | | | | | | | | | | | |
| 305 | **10B** | **Irrigation Service Time-of-Use** | | | | | | | | | |
| 306 | | Summer Customer Charge | | 624 | $ 13.00 | 8,110 | 624 | $ 39.00 | 24,330 | 16,220 | |
| 307 | | Summer Meter Charge | | 624 | $ 4.47 | 2,786 | 624 | $ 13.40 | 8,358 | 5,572 | |
| 308 | | Non-Summer Customer Charge | | 1,850 | $ 13.00 | 24,053 | 1,850 | $ 39.00 | 72,159 | 48,106 | |
| 309 | | Non-Summer Meter Charge | | 1,850 | $ 4.47 | 8,263 | 1,850 | $ 13.40 | 24,790 | 16,526 | |
| 310 | | Energy Charge | | | | | - | | | | |
| 311 | | Summer On-Peak | kWh | 2,943,593 | $ 0.1416941 | 417,090 | 2,943,593 | $ 0.1791890 | 527,459 | 110,370 | |
| 312 | | Summer Off-Peak | kWh | 5,082,537 | $ 0.0645303 | 327,978 | 5,082,537 | $ 0.0816063 | 414,767 | 86,789 | |
| 313 | | Summer Super Off-Peak | kWh | - | $ - | - | - | $ - | - | - | |
| 314 | | Non-Summer On-Peak | kWh | 4,515,431 | $ 0.1296938 | 585,624 | 4,515,431 | $ 0.1640132 | 740,590 | 154,967 | |
| 315 | | Non-Summer Off-Peak | kWh | 8,037,675 | $ 0.0645303 | 518,674 | 8,037,675 | $ 0.0816063 | 655,925 | 137,251 | |
| 316 | | Non-Summer Super Off-Peak | kWh | - | $ - | - | - | $ - | - | - | |
| 317 | | **Sub-Total** | | | | **1,892,577** | | | **2,468,378** | **575,801** | |
| 318 | | IIPR Recovery | | | | 3,192 | | | - | (3,192) | |
| 319 | | | | | | | | | | | |
| 320 | | **Total Schedule 10B** | | | | **1,895,769** | | | **2,468,378** | **572,609** | **30.20%** |
| 321 | | **Total Schedule 10B (Base Rates Only)** | | | | **1,892,577** | | | **2,465,186** | **572,609** | **30.26%** |
| 322 | | | | | | | | | | | |
| 323 | **11B** | **Water and Sewage Pumping Service Time-of-Use** | | | | | | | | | |
| 324 | | Summer Customer Charge | | 115 | $ 364.05 | 41,945 | 115 | $ 485.75 | 55,968 | 14,023 | |
| 325 | | Non-Summer Customer Charge | | 344 | $ 364.05 | 125,152 | 344 | $ 485.75 | 166,992 | 41,840 | |
| 326 | | Energy Charge | | | | | | | | | |
| 327 | | Summer On-Peak | kWh | 2,600,414 | $ 0.2117830 | 550,723 | 2,600,414 | $ 0.2828995 | 735,656 | 184,932 | |
| 328 | | Summer Off-Peak | kWh | 10,102,386 | $ 0.0264729 | 267,439 | 10,102,386 | $ 0.0353625 | 357,245 | 89,806 | |
| 329 | | Summer Super Off-Peak | kWh | - | $ - | - | - | $ - | - | - | |
| 330 | | Non-Summer On-Peak | kWh | 6,033,768 | $ 0.1323643 | 798,656 | 6,033,768 | $ 0.1768121 | 1,066,843 | 268,188 | |
| 331 | | Non-Summer Off-Peak | kWh | 22,972,547 | $ 0.0264729 | 608,150 | 22,972,547 | $ 0.0353625 | 812,366 | 204,216 | |
| 332 | | Non-Summer Super Off-Peak | kWh | - | $ - | - | - | $ - | - | - | |
| 333 | | **Sub-Total** | | | | **2,392,065** | | | **3,195,070** | **803,005** | |
| 334 | | IIPR Recovery | | | | 3,302 | | | - | (3,302) | |
| 335 | | | | | | | | | | | |
| 336 | | **Total Schedule 11B** | | | | **2,395,367** | | | **3,195,070** | **799,703** | **33.39%** |
| 337 | | **Total Schedule 11B (Base Rates Only)** | | | | **2,392,065** | | | **3,191,768** | **799,703** | **33.43%** |
| 338 | | | | | | | | | | | |
| 339 | **11B-TOD** | **Water and Sewage Pumping Service Time-of-Use** | | | | | | | | | |
| 340 | | Summer Customer Charge | | 346 | $ 364.05 | 125,837 | 346 | $ 485.75 | 167,904 | 42,067 | |
| 341 | | Non-Summer Customer Charge | | 1,031 | $ 364.05 | 375,460 | 1,031 | $ 485.75 | 500,976 | 125,516 | |

**Public Service Company of New Mexico**
**O-2 Proof of Revenue Analysis**
Test Period Ending September 30, 2028
*Summer: Jun-Aug, Non-Summer: Sep-May*

| Line No. | Schedule | Description | Units | Test Year Billing Units | | Current Rate | Revenue at Current Rates | Proposed Billing Units | | Proposed Rate | Proposed Revenue | Difference ($) | Difference (%) |
|---|---|---|---|---|---|---|---|---|---|---|---|---|---|
| 342 | | Energy Charge | | | | | | | | | | | |
| 343 | | Summer On-Peak | kWh | 1,411,254 | $ | 0.1226573 | 173,101 | 1,411,254 | $ | 0.1638495 | 231,233 | 58,133 | |
| 344 | | Summer Off-Peak | kWh | 17,445,561 | $ | 0.0626708 | 1,093,327 | 17,445,561 | $ | 0.0837176 | 1,460,501 | 367,174 | |
| 345 | | Summer Super Off-Peak | kWh | 19,251,587 | $ | 0.0309970 | 596,741 | 19,251,587 | $ | 0.0414068 | 797,146 | 200,405 | |
| 346 | | Non-Summer On-Peak | kWh | 3,814,954 | $ | 0.0739580 | 282,146 | 3,814,954 | $ | 0.0987954 | 376,900 | 94,754 | |
| 347 | | Non-Summer Off-Peak | kWh | 37,817,222 | $ | 0.0433659 | 1,639,978 | 37,817,222 | $ | 0.0579295 | 2,190,734 | 550,756 | |
| 348 | | Non-Summer Super Off-Peak | kWh | 45,386,772 | $ | 0.0298927 | 1,356,733 | 45,386,772 | $ | 0.0399316 | 1,812,367 | 455,634 | |
| 349 | | **Sub-Total** | | | | | **5,643,324** | | | | **7,537,761** | **1,894,438** | |
| 350 | | IIPR Recovery | | | | | 7,790 | | | | - | (7,790) | |
| 351 | | | | | | | | | | | | | |
| 352 | | **Total Schedule 11B-TOD** | | | | | **5,651,114** | | | | **7,537,761** | **1,886,648** | **33.39%** |
| 353 | | **Total Schedule 11B-TOD (Base Rates Only)** | | | | | **5,643,324** | | | | **7,529,971** | **1,886,648** | **33.43%** |
| 354 | | | | | | | | | | | | | |
| 355 | **15B** | **Large Service for Public Universities >= 8,000 kW min. at 115 kV** | | | | | | | | | | | |
| 356 | | Summer Customer Charge | | 3 | $ | 5,280.63 | 15,907 | 3 | $ | 6,719.03 | 20,240 | 4,333 | |
| 357 | | Non-Summer Customer Charge | | 9 | $ | 5,280.63 | 47,461 | 9 | $ | 6,719.03 | 60,389 | 12,928 | |
| 358 | | Demand Charge | | | | | | | | | | | |
| 359 | | Summer | kW | 59,386 | $ | 12.59 | 747,843 | 59,386 | $ | 16.02 | 951,550 | 203,707 | |
| 360 | | Non-Summer | kW | 143,554 | $ | 7.62 | 1,093,605 | 143,554 | $ | 9.69 | 1,391,495 | 297,890 | |
| 361 | | Summer Contract Capacity | kW | 16,416 | $ | 0.78 | 12,804 | 16,416 | $ | 0.99 | 16,292 | 3,488 | |
| 362 | | Non-Summer Contract Capacity | kW | 49,248 | $ | 0.78 | 38,413 | 49,248 | $ | 0.99 | 48,877 | 10,464 | |
| 363 | | Energy Charge | | | | | - | - | | | - | | |
| 364 | | Summer On-Peak | kWh | 10,264,209 | $ | 0.0527077 | 541,003 | 10,264,209 | $ | 0.0672598 | 690,368 | 149,365 | |
| 365 | | Summer Off-Peak | kWh | 12,836,136 | $ | 0.0210418 | 270,095 | 12,836,136 | $ | 0.0268512 | 344,665 | 74,570 | |
| 366 | | Non-Summer On-Peak | kWh | 21,693,286 | $ | 0.0411952 | 893,659 | 21,693,286 | $ | 0.0525687 | 1,140,388 | 246,729 | |
| 367 | | Non-Summer Off-Peak | kWh | 28,428,315 | $ | 0.0210418 | 598,182 | 28,428,315 | $ | 0.0268512 | 763,333 | 165,152 | |
| 368 | | Other Charges | | | | | - | - | | | - | | |
| 369 | | Billable RkVA Summer | kVAR | - | $ | 0.27 | - | - | $ | 0.27 | - | - | |
| 370 | | Billable RkVA Non-Summer | kVAR | - | $ | 0.27 | - | - | $ | 0.27 | - | - | |
| 371 | | **Sub-Total** | | | | | **4,258,972** | | | | **5,427,597** | **1,168,625** | |
| 372 | | IIPR Recovery | | | | | 8,513 | | | | - | (8,513) | |
| 373 | | | | | | | | | | | | | |
| 374 | | **Total Schedule 15B** | | | | | **4,267,486** | | | | **5,427,597** | **1,160,111** | **27.18%** |
| 375 | | **Total Schedule 15B (Base Rates Only)** | | | | | **4,258,972** | | | | **5,419,084** | **1,160,111** | **27.24%** |
| 376 | | | | | | | | | | | | | |
| 377 | **30B** | **Large Service for Manufacturing >= 30,000 kW min. at Distribution Voltage** | | | | | | | | | | | |
| 378 | | Summer Customer Charge | | 3 | $ | 51,514.76 | 155,176 | 3 | $ | 65,546.99 | 197,445 | 42,269 | |
| 379 | | Non-Summer Customer Charge | | 9 | $ | 51,514.76 | 463,001 | 9 | $ | 65,546.99 | 589,119 | 126,118 | |
| 380 | | Demand Charge | | | | | | | | | | | |
| 381 | | Summer | kW | 267,147 | $ | 29.28 | 7,822,787 | 267,147 | $ | 37.26 | 9,953,655 | 2,130,868 | |
| 382 | | Non-Summer | kW | 785,948 | $ | 20.70 | 16,269,261 | 785,948 | $ | 26.34 | 20,700,883 | 4,431,622 | |
| 383 | | Energy Charge | | | | | | - | | | | | |
| 384 | | Summer On-Peak | kWh | 65,841,365 | $ | 0.0164492 | 1,083,038 | 65,841,365 | $ | 0.0211264 | 1,390,994 | 307,956 | |
| 385 | | Summer Off-Peak | kWh | 116,429,176 | $ | 0.0080256 | 934,417 | 116,429,176 | $ | 0.0103077 | 1,200,113 | 265,696 | |
| 386 | | Summer Super Off-Peak | kWh | - | $ | - | - | - | $ | - | - | - | |
| 387 | | Non-Summer On-Peak | kWh | 196,543,377 | $ | 0.0127552 | 2,506,949 | 196,543,377 | $ | 0.0163821 | 3,219,787 | 712,837 | |
| 388 | | Non-Summer Off-Peak | kWh | 351,073,767 | $ | 0.0080256 | 2,817,586 | 351,073,767 | $ | 0.0103077 | 3,618,752 | 801,165 | |
| 389 | | Non-Summer Super Off-Peak | kWh | - | $ | - | - | - | $ | - | - | - | |
| 390 | | Other Charges | | | | | | - | | | | | |
| 391 | | Billable RkVA Summer | kVAR | - | $ | 0.27 | - | - | $ | 0.27 | - | - | |
| 392 | | Billable RkVA Non-Summer | kVAR | - | $ | 0.27 | - | - | $ | 0.27 | - | - | |
| 393 | | **Sub-Total** | | | | | **32,052,215** | | | | **40,870,747** | **8,818,532** | |
| 394 | | IIPR Recovery | | | | | 87,753 | | | | - | (87,753) | |
| 395 | | | | | | | | | | | | | |
| 396 | | **Total Schedule 30B** | | | | | **32,139,969** | | | | **40,870,747** | **8,730,778** | **27.16%** |
| 397 | | **Total Schedule 30B (Base Rates Only)** | | | | | **32,052,215** | | | | **40,782,994** | **8,730,778** | **27.24%** |
| 398 | | | | | | | | | | | | | |
| 399 | **33B** | **Large Service for Station Power Time-of-Use** | | | | | | | | | | | |
| 400 | | Summer Customer Charge | | 30 | $ | 461.70 | 13,908 | 30 | $ | 587.47 | 17,696 | 3,788 | |
| 401 | | Non-Summer Customer Charge | | 90 | $ | 461.70 | 41,497 | 90 | $ | 587.47 | 52,800 | 11,303 | |
| 402 | | Demand Charge | | | | | | | | | | | |
| 403 | | Summer | kW | 47,282 | $ | 2.28 | 107,899 | 47,282 | $ | 2.90 | 137,289 | 29,391 | |
| 404 | | Non-Summer | kW | 120,793 | $ | 1.57 | 190,126 | 120,793 | $ | 2.00 | 241,914 | 51,789 | |
| 405 | | Energy Charge | | | | | - | - | | | - | | |
| 406 | | Summer On-Peak | kWh | 1,337,376 | $ | 0.0577962 | 77,295 | 1,337,376 | $ | 0.0890564 | 119,102 | 41,807 | |
| 407 | | Summer Off-Peak | kWh | 2,284,077 | $ | 0.0286391 | 65,414 | 2,284,077 | $ | 0.0441291 | 100,794 | 35,380 | |
| 408 | | Summer Super Off-Peak | kWh | - | $ | - | - | - | $ | - | - | - | |
| 409 | | Non-Summer On-Peak | kWh | 3,829,818 | $ | 0.0471958 | 180,751 | 3,829,818 | $ | 0.0727225 | 278,514 | 97,763 | |
| 410 | | Non-Summer Off-Peak | kWh | 6,079,103 | $ | 0.0286391 | 174,100 | 6,079,103 | $ | 0.0441291 | 268,265 | 94,165 | |

**Public Service Company of New Mexico**
**O-2 Proof of Revenue Analysis**
Test Period Ending September 30, 2028
*Summer: Jun-Aug, Non-Summer: Sep-May*

| Line No. | Schedule | Description | Units | Test Year Billing Units | Current Rate | Revenue at Current Rates | Proposed Billing Units | Proposed Rate | Proposed Revenue | Difference ($) | Difference (%) |
|---|---|---|---|---|---|---|---|---|---|---|---|
| 411 | | Non-Summer Super Off-Peak | kWh | - | $ - | - | - | $ - | - | - | |
| 412 | | Other Charges | | | | - | - | | - | | |
| 413 | | Billable RkVA Summer | kVAR | 530,242 | $ 0.27 | 143,165 | 530,242 | $ 0.27 | 143,165 | - | |
| 414 | | Billable RkVA Non-Summer | kVAR | 1,271,282 | $ 0.27 | 343,246 | 1,271,282 | $ 0.27 | 343,246 | - | |
| 415 | | **Sub-Total** | | | | **1,337,400** | | | **1,702,786** | **365,386** | |
| 416 | | IIPR Recovery | | | | 1,088 | | | - | (1,088) | |
| 417 | | | | | | | | | | | |
| 418 | | **Total Schedule 33B** | | | | **1,338,489** | | | **1,702,786** | **364,298** | **27.22%** |
| 419 | | **Total Schedule 33B (Base Rates Only)** | | | | **1,337,400** | | | **1,701,698** | **364,298** | **27.24%** |
| 420 | | | | | | | | | | | |
| 421 | **35B** | **Large Power Service >= 3,000 kW Time-of-Use** | | | | | | | | | |
| 422 | | Summer Customer Charge | | 15 | $ 3,636.61 | 54,772 | 15 | $ 4,627.20 | 69,692 | 14,920 | |
| 423 | | Non-Summer Customer Charge | | 45 | $ 3,636.61 | 163,425 | 45 | $ 4,627.20 | 207,940 | 44,516 | |
| 424 | | Demand Charge | | | | | | | | | |
| 425 | | Summer | kW | 143,823 | $ 24.50 | 3,523,813 | 143,823 | $ 31.17 | 4,483,284 | 959,470 | |
| 426 | | Non-Summer | kW | 432,113 | $ 15.76 | 6,811,976 | 432,113 | $ 20.06 | 8,666,752 | 1,854,777 | |
| 427 | | Energy Charge | | | | | - | | | | |
| 428 | | Summer On-Peak | kWh | 29,117,737 | $ 0.0193029 | 562,057 | 29,117,737 | $ 0.0247591 | 720,930 | 158,873 | |
| 429 | | Summer Off-Peak | kWh | 51,867,305 | $ 0.0100250 | 519,969 | 51,867,305 | $ 0.0128587 | 666,945 | 146,976 | |
| 430 | | Summer Super Off-Peak | kWh | - | $ - | - | - | $ - | - | - | |
| 431 | | Non-Summer On-Peak | kWh | 80,467,304 | $ 0.0151577 | 1,219,703 | 80,467,304 | $ 0.0194423 | 1,564,468 | 344,765 | |
| 432 | | Non-Summer Off-Peak | kWh | 143,170,829 | $ 0.0100250 | 1,435,286 | 143,170,829 | $ 0.0128587 | 1,840,988 | 405,702 | |
| 433 | | Non-Summer Super Off-Peak | kWh | - | $ - | - | - | $ - | - | - | |
| 434 | | Other Charges | | | | | | | | | |
| 435 | | Billable RkVA Summer | kVAR | 1,977 | $ 0.27 | 534 | 1,977 | $ 0.27 | 534 | - | |
| 436 | | Billable RkVA Non-Summer | kVAR | 2,257 | $ 0.27 | 609 | 2,257 | $ 0.27 | 609 | - | |
| 437 | | **Sub-Total** | | | | **14,292,144** | | | **18,222,142** | **3,929,998** | |
| 438 | | IIPR Recovery | | | | 36,927 | | | - | (36,927) | |
| 439 | | | | | | | | | | | |
| 440 | | **Total Schedule 35B** | | | | **14,329,071** | | | **18,222,142** | **3,893,071** | **27.17%** |
| 441 | | **Total Schedule 35B (Base Rates Only)** | | | | **14,292,144** | | | **18,185,215** | **3,893,071** | **27.24%** |
| 442 | | | | | | | | | | | |
| 443 | **36B** | **Special Service Rate** | | | | | | | | | |
| 444 | | Summer Customer Charge | | 3 | $ 23,376.08 | 70,128 | 3 | $ 77,731.59 | 233,195 | 163,067 | |
| 445 | | Non-Summer Customer Charge | | 9 | $ 23,376.08 | 210,385 | 9 | $ 77,731.59 | 699,584 | 489,200 | |
| 446 | | Summer Contribution to Production Compon | kW | 1,501,829 | $ - | - | 1,501,829 | $ 4.48 | 6,727,278 | 6,727,278 | |
| 447 | | Summer Transmission Demand Charge | kW | 1,501,829 | $ 4.84 | 7,268,082 | 1,501,829 | $ 10.20 | 15,325,652 | 8,057,570 | |
| 448 | | Non-Summer Contribution to Production Con | kW | 3,850,258 | $ - | - | 3,850,258 | $ 4.48 | 17,246,810 | 17,246,810 | |
| 449 | | Non-Summer Transmission Demand Charge | kW | 3,850,258 | $ 4.84 | 18,633,275 | 3,850,258 | $ 10.20 | 39,290,572 | 20,657,297 | |
| 450 | | Summer Energy Related Non-Fuel Charge | kWh | 355,574,127 | $ 0.0264856 | 9,417,604 | 355,574,127 | $ 0.0049609 | 1,763,964 | (7,653,640) | |
| 451 | | Non-Summer Energy Related Non-Fuel Charg | kWh | 852,144,470 | $ 0.0264856 | 22,569,580 | 852,144,470 | $ 0.0049609 | 4,227,395 | (18,342,185) | |
| 452 | | **Sub-Total** | | | | **58,169,054** | | | **85,514,451** | **27,345,397** | |
| 453 | | IIPR Recovery | | | | - | | | - | - | |
| 454 | | | | | | | | | | | |
| 455 | | **Total Schedule 36B** | | | | **58,169,054** | | | **85,514,451** | **27,345,397** | **47.01%** |
| 456 | | **Total Schedule 36B (Base Rates Only)** | | | | **58,169,054** | | | **85,514,451** | **27,345,397** | **47.01%** |
| 457 | | | | | | | | | | | |
| 458 | **37B** | **Data Center Large Power** | | | | | | | | | |
| 459 | | Summer Customer Charge | | - | - | - | - | $ 29,622.34 | - | - | |
| 460 | | Non-Summer Customer Charge | | - | - | - | - | $ 29,622.34 | - | - | |
| 461 | | Demand Charge | | | | | | | | | |
| 462 | | Summer | kW | - | - | - | - | $ 39.46 | - | - | |
| 463 | | Non-Summer | kW | - | - | - | - | $ 27.32 | - | - | |
| 464 | | Energy Charge | | | | | | | | | |
| 465 | | Summer On-Peak | kWh | - | - | - | - | $ 0.0078358 | - | - | |
| 466 | | Summer Off-Peak | kWh | - | - | - | - | $ 0.0038231 | - | - | |
| 467 | | Non-Summer On-Peak | kWh | - | - | - | - | $ 0.0060761 | - | - | |
| 468 | | Non-Summer Off-Peak | kWh | - | - | - | - | $ 0.0038231 | - | - | |
| 469 | | Other Charges | | | | | | | | | |
| 470 | | Billable RkVA Summer | kVAR | - | - | - | - | $ 0.27 | - | - | |
| 471 | | Billable RkVA Non-Summer | kVAR | - | - | - | - | $ 0.27 | - | - | |
| 472 | | **Sub-Total** | | | | **-** | | | **-** | **-** | |
| 473 | | IIPR Recovery | | | | - | | | - | - | |
| 474 | | | | | | | | | | | |
| 475 | | **Total Schedule 37B** | | | | **-** | | | **-** | **-** | |
| 476 | | **Total Schedule 37B (Base Rates Only)** | | | | **-** | | | **-** | **-** | |

This schedule is sponsored by PNM Witness Menhorn

**Public Service Company of New Mexico**
**O-2 Proof of Revenue Analysis**
Test Period Ending September 30, 2028
*Summer: Jun-Aug, Non-Summer: Sep-May*

| Line No. | Schedule | Description | Units | Test Year Billing Units | Current Rate | Revenue at Current Rates | Proposed Billing Units | Proposed Rate | Proposed Revenue | Difference ($) | Difference (%) |
|---|---|---|---|---|---|---|---|---|---|---|---|
| 477 | | | | | | | | | | | |
| 478 | **38B** | **Large Power at Transmission Service** | | | | | | | | | |
| 479 | | Summer Customer Charge | | - | - | - | - | $ 29,622.34 | - | - | |
| 480 | | Non-Summer Customer Charge | | - | - | - | - | $ 29,622.34 | - | - | |
| 481 | | Demand Charge | | | | | | | | | |
| 482 | | Summer | kW | - | - | - | - | $ 36.31 | - | - | |
| 483 | | Non-Summer | kW | - | - | - | - | $ 25.14 | - | - | |
| 484 | | Energy Charge | | | | | | | | | |
| 485 | | Summer On-Peak | kWh | - | - | - | - | $ 0.0078358 | - | - | |
| 486 | | Summer Off-Peak | kWh | - | - | - | - | $ 0.0038231 | - | - | |
| 487 | | Non-Summer On-Peak | kWh | - | - | - | - | $ 0.0060761 | - | - | |
| 488 | | Non-Summer Off-Peak | kWh | - | - | - | - | $ 0.0038231 | - | - | |
| 489 | | Other Charges | | | | | | | | | |
| 490 | | Billable RkVA Summer | kVAR | - | - | - | - | $ 0.27 | - | - | |
| 491 | | Billable RkVA Non-Summer | kVAR | - | - | - | - | $ 0.27 | - | - | |
| 492 | | **Sub-Total** | | | | **-** | | | **-** | **-** | |
| 493 | | IIPR Recovery | | | | - | | | - | - | |
| 494 | | | | | | | | | | | |
| 495 | | **Total Schedule 38B** | | | | **-** | | | **-** | **-** | |
| 496 | | **Total Schedule 38B (Base Rates Only)** | | | | **-** | | | **-** | **-** | |
| 497 | | | | | | | | | | | |
| 498 | **6** | **Private Area Lighting Service** | | | | | | | | | |
| 499 | | Fixture Rate | | | | | | | | | |
| 500 | | 175W MV Lt. (73 kWh) - (LA12) | | 21,081 | $ 14.41 | 303,750 | 21,081 | $ 18.34 | 386,557 | 82,807 | |
| 501 | | 175W MV Lt. (73 kWh) - (LA1A) | | 10,590 | $ 14.41 | 152,584 | 10,590 | $ 18.34 | 194,181 | 41,597 | |
| 502 | | 400W MV Lt. (162 kWh) - (LAFA) | | 465 | $ 28.99 | 13,469 | 465 | $ 36.89 | 17,141 | 3,672 | |
| 503 | | 400W MH Lt. (162 kWh) - (LAMA) | | 2,152 | $ 30.75 | 66,194 | 2,152 | $ 39.14 | 84,239 | 18,045 | |
| 504 | | 1,000W MH Lt. (380 kWh) - (LANA) | | 209 | $ 67.26 | 14,064 | 209 | $ 85.60 | 17,898 | 3,834 | |
| 505 | | 100W HPS Lt. (45 kWh) - (LA32) | | 39,125 | $ 11.20 | 438,308 | 39,125 | $ 14.26 | 557,799 | 119,490 | |
| 506 | | 100W HPS Lt. (45 kWh) - (LA3A) | | 19,999 | $ 11.20 | 224,046 | 19,999 | $ 14.26 | 285,124 | 61,079 | |
| 507 | | 200W HPS Lt. (89 kWh) - (LAOA) | | 9 | $ 18.71 | 171 | 9 | $ 23.81 | 218 | 47 | |
| 508 | | 200W HPS Lt. (89 kWh) - (LATA) | | 5,200 | $ 18.71 | 97,301 | 5,200 | $ 23.81 | 123,827 | 26,526 | |
| 509 | | 400W HPS FL (165 kWh) - (LA42) | | 15,663 | $ 31.74 | 497,093 | 15,663 | $ 40.39 | 632,609 | 135,516 | |
| 510 | | 400W HPS FL (165 kWh) (30' Wood Pole) - ( | | 5,055 | $ 31.74 | 160,436 | 5,055 | $ 40.39 | 204,173 | 43,737 | |
| 511 | | 400W HPS FL (165 kWh) (35' Wood Pole) - ( | | 6,137 | $ 31.74 | 194,787 | 6,137 | $ 40.39 | 247,889 | 53,102 | |
| 512 | | 400W HPS FL (165 kWh) (40' Wood Pole) - ( | | 123 | $ 31.74 | 3,904 | 123 | $ 40.39 | 4,968 | 1,064 | |
| 513 | | 400W HPS Lt. (165 kWh) - (LA4A) | | 172 | $ 31.74 | 5,465 | 172 | $ 40.39 | 6,955 | 1,490 | |
| 514 | | 40W LED - Company Owned (14.2 kWh) - (QA12) | | 4,340 | $ 3.38 | 14,657 | 4,340 | $ 4.30 | 18,653 | 3,996 | |
| 515 | | 40W LED - Company Owned (14.2 kWh) - (QA1A) | | 2,629 | $ 3.38 | 8,879 | 2,629 | $ 4.30 | 11,299 | 2,420 | |
| 516 | | 40W LED - Company Owned (14.2 kWh) - (QA32) | | 9,351 | $ 3.38 | 31,584 | 9,351 | $ 4.30 | 40,195 | 8,610 | |
| 517 | | 40W LED - Company Owned (14.2 kWh) - (QA3A) | | 4,359 | $ 3.38 | 14,724 | 4,359 | $ 4.30 | 18,738 | 4,014 | |
| 518 | | 120W LED - Company Owned (42.7 kWh) - (QAFA) | | 1,526 | $ 10.16 | 15,500 | 1,526 | $ 12.93 | 19,726 | 4,226 | |
| 519 | | 120W LED - Company Owned (42.7 kWh) - (QAOA) | | 366 | $ 10.16 | 3,722 | 366 | $ 12.93 | 4,736 | 1,015 | |
| 520 | | 120W LED - Company Owned (42.7 kWh) - (QATA) | | 5,827 | $ 10.16 | 59,182 | 5,827 | $ 12.93 | 75,317 | 16,134 | |
| 521 | | 200W LED - Company Owned (71.1 kWh) - (QB42) | | 1,334 | $ 16.91 | 22,560 | 1,334 | $ 21.52 | 28,710 | 6,150 | |
| 522 | | 200W LED - Company Owned (71.1 kWh) - (QC42) | | 1,626 | $ 16.91 | 27,497 | 1,626 | $ 21.52 | 34,993 | 7,496 | |
| 523 | | 250W LED - Company Owned (88.9 kWh) - (QA42) | | 1,963 | $ 21.16 | 41,521 | 1,963 | $ 26.92 | 52,841 | 11,319 | |
| 524 | | Pole Charge (Wood) - L0LA) | | 15,928 | $ 3.27 | 52,081 | 15,928 | $ 4.16 | 66,279 | 14,198 | |
| 525 | | **Sub-Total** | | | | **2,463,478** | | | **3,135,064** | **671,586** | |
| 526 | | IIPR Recovery | | | | 553 | | | - | (553) | |
| 527 | | | | | | | | | | | |
| 528 | | **Total Schedule 6** | | | | **2,464,031** | | | **3,135,064** | **671,033** | **27.23%** |
| 529 | | **Total Schedule 6 (Base Rates Only)** | | | | **2,463,478** | | | **3,134,511** | **671,033** | **27.24%** |
| 530 | | | | | | | | | | | |
| 531 | **20** | **Integrated System Streetlighting and Floodlighting Service - New Installation** | | | | | | | | | |
| 532 | | Fixture Charge | | | | | | | | | |
| 533 | | Units - Company-Owned - 175W Mercury V | | 11,184 | $ 16.25 | 181,795 | 11,184 | $ 21.70 | 242,661 | 60,867 | |
| 534 | | Units - Company-Owned - 400W Mercury V | | 1,560 | $ 24.68 | 38,503 | 1,560 | $ 32.94 | 51,394 | 12,891 | |
| 535 | | Units - Company-Owned - 55W Low Pressur | | 4,596 | $ 14.60 | 67,099 | 4,596 | $ 19.49 | 89,565 | 22,466 | |
| 536 | | Units - Company-Owned - 135W Low Pressu | | 132 | $ 19.69 | 2,599 | 132 | $ 26.29 | 3,470 | 870 | |
| 537 | | Units - Company-Owned - 70W High Pressu | | 108 | $ 12.59 | 1,359 | 108 | $ 16.80 | 1,815 | 455 | |
| 538 | | Units - Company-Owned - 100W High Press | | 39,768 | $ 13.82 | 549,507 | 39,768 | $ 18.44 | 733,487 | 183,980 | |
| 539 | | Units - Company-Owned - 200W High Press | | 9,432 | $ 17.23 | 162,532 | 9,432 | $ 23.00 | 216,950 | 54,418 | |
| 540 | | Units - Company-Owned - 250W High Press | | 14,640 | $ 19.88 | 290,985 | 14,640 | $ 26.53 | 388,410 | 97,425 | |
| 541 | | Units - Company-Owned - 400W High Press | | 6,912 | $ 24.95 | 172,424 | 6,912 | $ 33.30 | 230,154 | 57,729 | |
| 542 | | Units - Company-Owned - 400W High Press | | 2,220 | $ 24.95 | 55,379 | 2,220 | $ 33.30 | 73,921 | 18,542 | |

**Public Service Company of New Mexico**
**O-2 Proof of Revenue Analysis**
Test Period Ending September 30, 2028
*Summer: Jun-Aug, Non-Summer: Sep-May*

| Line No. | Schedule | Description | Units | Test Year Billing Units | Current Rate | Revenue at Current Rates | Proposed Billing Units | Proposed Rate | Proposed Revenue | Difference ($) | Difference (%) |
|---|---|---|---|---|---|---|---|---|---|---|---|
| 543 | | | | | | | | | | | |
| 544 | | Units - Wood Pole - Company-Owned | | 120,239 | $ 5.59 | 671,764 | 120,239 | $ 7.46 | 896,678 | 224,914 | |
| 545 | | Units - Non-Wood Pole- Company-Owned | | 52,865 | $ 10.86 | 574,291 | 52,865 | $ 14.50 | 766,569 | 192,278 | |
| 546 | | Units - 10W LED - Company Owned | | - | $ 0.82 | - | - | $ 1.09 | - | - | |
| 547 | | Units - 20W LED - Company Owned | | - | $ 1.63 | - | - | $ 2.18 | - | - | |
| 548 | | Units - 30W LED - Company Owned | | 5,460 | $ 2.46 | 13,432 | 5,460 | $ 3.28 | 17,929 | 4,497 | |
| 549 | | Units - 40W LED - Company Owned | | 89,232 | $ 3.28 | 292,348 | 89,232 | $ 4.37 | 390,229 | 97,881 | |
| 550 | | Units - 50W LED - Company Owned | | - | $ 4.09 | - | - | $ 5.46 | - | - | |
| 551 | | Units - 60W LED - Company Owned | | - | $ 4.91 | - | - | $ 6.55 | - | - | |
| 552 | | Units - 70W LED - Company Owned | | - | $ 5.74 | - | - | $ 7.65 | - | - | |
| 553 | | Units - 80W LED - Company Owned | | - | $ 6.55 | - | - | $ 8.74 | - | - | |
| 554 | | Units - 90W LED - Company Owned | | - | $ 7.37 | - | - | $ 9.83 | - | - | |
| 555 | | Units - 100W LED - Company Owned | | 20,964 | $ 8.18 | 171,589 | 20,964 | $ 10.93 | 229,038 | 57,450 | |
| 556 | | Units - 110W LED - Company Owned | | - | $ 9.01 | - | - | $ 12.03 | - | - | |
| 557 | | Units - 120W LED - Company Owned | | 61,128 | $ 9.83 | 600,815 | 61,128 | $ 13.12 | 801,974 | 201,159 | |
| 558 | | Units - 130W LED - Company Owned | | - | $ 10.64 | - | - | $ 14.20 | - | - | |
| 559 | | Units - 140W LED - Company Owned | | 876 | $ 11.46 | 10,040 | 876 | $ 15.30 | 13,402 | 3,361 | |
| 560 | | Units - 150W LED - Company Owned | | 156 | $ 12.28 | 1,915 | 156 | $ 16.39 | 2,557 | 641 | |
| 561 | | Units - 160W LED - Company Owned | | - | $ 13.11 | - | - | $ 17.49 | - | - | |
| 562 | | Units - 170W LED - Company Owned | | - | $ 13.92 | - | - | $ 18.58 | - | - | |
| 563 | | Units - 180W LED - Company Owned | | 13,188 | $ 14.74 | 194,358 | 13,188 | $ 19.67 | 259,431 | 65,073 | |
| 564 | | Units - 190W LED - Company Owned | | - | $ 15.55 | - | - | $ 20.75 | - | - | |
| 565 | | Units - 200W LED - Company Owned | | 276 | $ 16.38 | 4,521 | 276 | $ 21.87 | 6,035 | 1,514 | |
| 566 | | Units - 210W LED - Company Owned | | - | $ 17.20 | - | - | $ 22.95 | - | - | |
| 567 | | Units - 220W LED - Company Owned | | - | $ 18.01 | - | - | $ 24.04 | - | - | |
| 568 | | Units - 230W LED - Company Owned | | - | $ 18.83 | - | - | $ 25.13 | - | - | |
| 569 | | Units - 240W LED - Company Owned | | - | $ 19.66 | - | - | $ 26.23 | - | - | |
| 570 | | Units - 250W LED - Company Owned | | 12 | $ 20.47 | 246 | 12 | $ 27.33 | 328 | 82 | |
| 571 | | Units - 260W LED - Company Owned | | 3,012 | $ 21.29 | 64,125 | 3,012 | $ 28.42 | 85,595 | 21,470 | |
| 572 | | Units - 270W LED - Company Owned | | - | $ 22.11 | - | - | $ 29.50 | - | - | |
| 573 | | Units - 280W LED - Company Owned | | - | $ 22.92 | - | - | $ 30.59 | - | - | |
| 574 | | Units - 290W LED - Company Owned | | - | $ 23.75 | - | - | $ 31.69 | - | - | |
| 575 | | Units - 300W LED - Company Owned | | - | $ 24.57 | - | - | $ 32.78 | - | - | |
| 576 | | Units - 310W LED - Company Owned | | - | $ 25.38 | - | - | $ 33.87 | - | - | |
| 577 | | Units - 320W LED - Company Owned | | - | $ 26.20 | - | - | $ 34.96 | - | - | |
| 578 | | Units - 330W LED - Company Owned | | - | $ 27.03 | - | - | $ 36.06 | - | - | |
| 579 | | Units - 340W LED - Company Owned | | - | $ 27.84 | - | - | $ 37.15 | - | - | |
| 580 | | Units - 350W LED - Company Owned | | - | $ 28.66 | - | - | $ 38.24 | - | - | |
| 581 | | Units - 360W LED - Company Owned | | - | $ 29.47 | - | - | $ 39.33 | - | - | |
| 582 | | Units - 370W LED - Company Owned | | - | $ 30.30 | - | - | $ 40.43 | - | - | |
| 583 | | Units - 380W LED - Company Owned | | - | $ 31.12 | - | - | $ 41.52 | - | - | |
| 584 | | Units - 390W LED - Company Owned | | - | $ 31.93 | - | - | $ 42.61 | - | - | |
| 585 | | Units - 400W LED - Company Owned | | 300 | $ 32.75 | 9,825 | 300 | $ 43.72 | 13,115 | 3,290 | |
| 586 | | kWh - Company-Owned - Metered | kWh | 253,174 | $ 0.2232448 | 56,520 | 253,174 | $ 0.2923148 | 74,007 | 17,487 | |
| 587 | | **Sub-Total** | | | | **4,187,973** | | | **5,588,712** | **1,400,739** | |
| 588 | | IIPR Recovery | | | | 637 | | | - | (637) | |
| 589 | | **Total Schedule 20** | | | | **4,188,610** | | | **5,588,712** | **1,400,102** | **33.43%** |
| 590 | | **Total Schedule 20 (Base Rates Only)** | | | | **4,187,973** | | | **5,588,075** | **1,400,102** | **33.43%** |
| 591 | | | | | | | | | | | |
| 592 | **20-Customer** | | | | | | | | | | |
| 593 | | Fixture Charge | | | | | | | | | |
| 594 | | Units - Customer-Owned - 175W Mercury V | | 720 | $ 6.37 | 4,585 | 720 | $ 8.34 | 6,007 | 1,422 | |
| 595 | | Units - Customer-Owned - 400W Mercury V | | 1,944 | $ 14.14 | 27,488 | 1,944 | $ 18.52 | 36,009 | 8,522 | |
| 596 | | Units - Customer-Owned - 55W Low Pressu | | - | $ 2.45 | - | - | $ 3.20 | - | - | |
| 597 | | Units - Customer-Owned - 135W Low Pressu | | - | $ 5.49 | - | - | $ 7.19 | - | - | |
| 598 | | Units - Customer-Owned - 70W High Pressu | | 96 | $ 2.70 | 259 | 96 | $ 3.54 | 340 | 80 | |
| 599 | | Units - Customer-Owned - 100W High Press | | 36,684 | $ 3.93 | 144,224 | 36,684 | $ 5.15 | 188,937 | 44,713 | |
| 600 | | Units - Customer-Owned - 200W High Press | | - | $ 7.77 | - | - | $ 10.17 | - | - | |
| 601 | | Units - Customer-Owned - 250W High Press | | 14,484 | $ 9.33 | 135,201 | 14,484 | $ 12.23 | 177,116 | 41,916 | |
| 602 | | Units - Customer-Owned - 400W High Press | | 108 | $ 14.40 | 1,556 | 108 | $ 18.87 | 2,038 | 482 | |
| 603 | | Units - Customer-Owned - 400W High Press | | 10,224 | $ 14.40 | 147,267 | 10,224 | $ 18.87 | 192,924 | 45,657 | |
| 604 | | Units - 10W LED - Customer Owned | | 192 | $ 0.23 | 44 | 192 | $ 0.30 | 58 | 14 | |
| 605 | | Units - 20W LED - Customer Owned | | - | $ 0.46 | - | - | $ 0.60 | - | - | |
| 606 | | Units - 30W LED - Customer Owned | | - | $ 0.69 | - | - | $ 0.90 | - | - | |
| 607 | | Units - 40W LED - Customer Owned | | 107,460 | $ 0.92 | 98,826 | 107,460 | $ 1.20 | 129,465 | 30,639 | |
| 608 | | Units - 50W LED - Customer Owned | | 2,544 | $ 1.15 | 2,925 | 2,544 | $ 1.51 | 3,831 | 907 | |
| 609 | | Units - 60W LED - Customer Owned | | 1,164 | $ 1.38 | 1,606 | 1,164 | $ 1.81 | 2,104 | 498 | |
| 610 | | Units - 70W LED - Customer Owned | | 336 | $ 1.61 | 541 | 336 | $ 2.11 | 708 | 168 | |
| 611 | | Units - 80W LED - Customer Owned | | 6,912 | $ 1.84 | 12,713 | 6,912 | $ 2.41 | 16,655 | 3,941 | |

**Public Service Company of New Mexico**
**O-2 Proof of Revenue Analysis**
Test Period Ending September 30, 2028
*Summer: Jun-Aug, Non-Summer: Sep-May*

| Line No. | Schedule | Description | Units | Test Year Billing Units | Current Rate | Revenue at Current Rates | Proposed Billing Units | Proposed Rate | Proposed Revenue | Difference ($) | Difference (%) |
|---|---|---|---|---|---|---|---|---|---|---|---|
| 612 | | Units - 90W LED - Customer Owned | | 9,912 | $ 2.07 | 20,510 | 9,912 | $ 2.71 | 26,869 | 6,359 | |
| 613 | | Units - 100W LED - Customer Owned | | 21,468 | $ 2.30 | 49,358 | 21,468 | $ 3.01 | 64,660 | 15,302 | |
| 614 | | Units - 110W LED - Customer Owned | | 1,716 | $ 2.53 | 4,340 | 1,716 | $ 3.31 | 5,685 | 1,345 | |
| 615 | | Units - 120W LED - Customer Owned | | 27,180 | $ 2.76 | 74,989 | 27,180 | $ 3.61 | 98,237 | 23,248 | |
| 616 | | Units - 130W LED - Customer Owned | | 25,536 | $ 2.99 | 76,324 | 25,536 | $ 3.92 | 99,986 | 23,662 | |
| 617 | | Units - 140W LED - Customer Owned | | 17,004 | $ 3.22 | 54,732 | 17,004 | $ 4.22 | 71,701 | 16,968 | |
| 618 | | Units - 150W LED - Customer Owned | | - | $ 3.45 | - | - | $ 4.51 | - | - | |
| 619 | | Units - 160W LED - Customer Owned | | 624 | $ 3.68 | 2,295 | 624 | $ 4.82 | 3,007 | 712 | |
| 620 | | Units - 170W LED - Customer Owned | | - | $ 3.91 | - | - | $ 5.11 | - | - | |
| 621 | | Units - 180W LED - Customer Owned | | 12,000 | $ 4.14 | 49,661 | 12,000 | $ 5.42 | 65,058 | 15,396 | |
| 622 | | Units - 190W LED - Customer Owned | | 5,544 | $ 4.36 | 24,154 | 5,544 | $ 5.71 | 31,643 | 7,488 | |
| 623 | | Units - 200W LED - Customer Owned | | - | $ 4.59 | - | - | $ 6.00 | - | - | |
| 624 | | Units - 210W LED - Customer Owned | | 9,120 | $ 4.82 | 43,928 | 9,120 | $ 6.31 | 57,547 | 13,619 | |
| 625 | | Units - 220W LED - Customer Owned | | - | $ 5.05 | - | - | $ 6.60 | - | - | |
| 626 | | Units - 230W LED - Customer Owned | | - | $ 5.28 | - | - | $ 6.90 | - | - | |
| 627 | | Units - 240W LED - Customer Owned | | - | $ 5.51 | - | - | $ 7.20 | - | - | |
| 628 | | Units - 250W LED - Customer Owned | | 132 | $ 5.74 | 757 | 132 | $ 7.51 | 992 | 235 | |
| 629 | | Units - 260W LED - Customer Owned | | - | $ 5.97 | - | - | $ 7.81 | - | - | |
| 630 | | Units - 270W LED - Customer Owned | | - | $ 6.20 | - | - | $ 8.11 | - | - | |
| 631 | | Units - 280W LED - Customer Owned | | - | $ 6.43 | - | - | $ 8.41 | - | - | |
| 632 | | Units - 290W LED - Customer Owned | | - | $ 6.66 | - | - | $ 8.71 | - | - | |
| 633 | | Units - 300W LED - Customer Owned | | - | $ 6.89 | - | - | $ 9.01 | - | - | |
| 634 | | Units - 310W LED - Customer Owned | | 12,612 | $ 7.12 | 89,745 | 12,612 | $ 9.32 | 117,568 | 27,823 | |
| 635 | | Units - 320W LED - Customer Owned | | - | $ 7.35 | - | - | $ 9.61 | - | - | |
| 636 | | Units - 330W LED - Customer Owned | | - | $ 7.58 | - | - | $ 9.91 | - | - | |
| 637 | | Units - 340W LED - Customer Owned | | - | $ 7.81 | - | - | $ 10.21 | - | - | |
| 638 | | Units - 350W LED - Customer Owned | | - | $ 8.04 | - | - | $ 10.51 | - | - | |
| 639 | | Units - 360W LED - Customer Owned | | - | $ 8.27 | - | - | $ 10.81 | - | - | |
| 640 | | Units - 370W LED - Customer Owned | | - | $ 8.50 | - | - | $ 11.11 | - | - | |
| 641 | | Units - 380W LED - Customer Owned | | - | $ 8.73 | - | - | $ 11.42 | - | - | |
| 642 | | Units - 390W LED - Customer Owned | | - | $ 8.96 | - | - | $ 11.72 | - | - | |
| 643 | | Units - 400W LED - Customer Owned | | - | $ 9.19 | - | - | $ 12.02 | - | - | |
| 644 | | Units - 460W LED - Customer Owned | | 600 | $ 10.56 | 6,339 | 600 | $ 13.84 | 8,304 | 1,965 | |
| 645 | | Units - 470W LED - Customer Owned | | 10,836 | $ 10.79 | 116,969 | 10,836 | $ 14.14 | 153,232 | 36,263 | |
| 646 | | kWh - Customer-Owned - Metered | kWh | 929,662 | $ 0.0645872 | 60,044 | 929,662 | $ 0.0832178 | 77,364 | 17,320 | |
| 647 | | **Sub-Total** | | | | **1,251,380** | | | **1,638,045** | **386,664** | |
| 648 | | IIPR Recovery | | | | 854 | | | - | (854) | |
| 649 | | **Total Schedule 20-Customer** | | | | **1,252,234** | | | **1,638,045** | **385,810** | **30.81%** |
| 650 | | **Total Schedule 20-Customer (Base Rates Only)** | | | | **1,251,380** | | | **1,637,191** | **385,810** | **30.83%** |
| 651 | | | | | | | | | | | |
| 652 | | **Grand Total** | | | | **943,649,905** | | | **1,229,978,413** | **286,328,508** | **30.34%** |
| 653 | | **Proposed Change** | | | | | | Target | 1,229,978,413 | (0) | 0.00% |
| 654 | | | | | | | | | | | |
| 655 | | **Grand Total** | | | | **943,649,905** | | | **1,229,978,413** | **286,328,508** | |
| 656 | | Less: IIPR Recovery | | | | 1,540,268 | | | 1,540,268 | | |
| 657 | | **Banded Revenue** | | | | **942,109,637** | | | **1,228,438,144** | **286,328,508** | **30.39%** |

This schedule is sponsored by PNM Witness Menhorn

# PNM Schedule O-3

Comparison of rates for service under the present and proposed schedules

**Public Service Company of New Mexico**

**O-3 Comparison of Rates and Riders for Service**

Test Period Ending September 30, 2028

*Summer: Jun-Aug, Non-Summer: Sep-May*

| Line No. | Schedule | Description | Units | Current Rate | Proposed Rate | Difference - Amount | Difference - % |
|---|---|---|---|---|---|---|---|
| 1 | **1A** | **Residential Service - Standard** | | | | | |
| 2 | | Customer Charge | Bills | $ 11.93 | $ 20.13 | $ 8.20 | 68.7% |
| 3 | | Energy Charge | | | | | |
| 4 | | Block 1 Summer | kWh | $ 0.0896783 | $ 0.1256444 | $ 0.0359660 | 40.1% |
| 5 | | Block 2 Summer | kWh | $ 0.1486546 | $ 0.1816302 | $ 0.0329756 | 22.2% |
| 6 | | Block 3 Summer | kWh | $ 0.1994661 | $ 0.2407165 | $ 0.0412504 | 20.7% |
| 7 | | Block 1 Non-Summer | kWh | $ 0.0896783 | $ 0.1256444 | $ 0.0359660 | 40.1% |
| 8 | | Block 2 Non-Summer | kWh | $ 0.1282683 | $ 0.1606396 | $ 0.0323714 | 25.2% |
| 9 | | Block 3 Non-Summer | kWh | $ 0.1701214 | $ 0.2104638 | $ 0.0403424 | 23.7% |
| 10 | | Whole House EV Rate | kWh | $ 0.0575000 | $ 0.0787690 | $ 0.0212690 | 37.0% |
| 11 | | | | | | | |
| 12 | **1A** | **Residential Service- Low Income** | | | | | |
| 13 | | Customer Charge | Bills | $ 11.93 | $ - | $ (11.93) | -100.0% |
| 14 | | Energy Charge | | | | | |
| 15 | | Block 1 Summer | kWh | $ 0.0896783 | $ 0.1256444 | $ 0.0359660 | 40.1% |
| 16 | | Block 2 Summer | kWh | $ 0.1486546 | $ 0.1816302 | $ 0.0329756 | 22.2% |
| 17 | | Block 3 Summer | kWh | $ 0.1994661 | $ 0.2407165 | $ 0.0412504 | 20.7% |
| 18 | | Block 1 Non-Summer | kWh | $ 0.0896783 | $ 0.1256444 | $ 0.0359660 | 40.1% |
| 19 | | Block 2 Non-Summer | kWh | $ 0.1282683 | $ 0.1606396 | $ 0.0323714 | 25.2% |
| 20 | | Block 3 Non-Summer | kWh | $ 0.1701214 | $ 0.2104638 | $ 0.0403424 | 23.7% |
| 21 | | Whole House EV Rate | kWh | $ 0.0575000 | $ 0.0787690 | $ 0.0212690 | 37.0% |
| 22 | | | | | | | |
| 23 | **1B** | **Residential Service Time-of-Day Pilot** | | | | | |
| 24 | | Customer Charge | Bills | $ 11.93 | $ 20.13 | $ 8.20 | 68.8% |
| 25 | | Energy Charge | | | | | |
| 26 | | Summer On-Peak | kWh | $ 0.3751823 | $ 0.4553870 | $ 0.0802048 | 21.4% |
| 27 | | Summer Off-Peak | kWh | $ 0.0931305 | $ 0.1345115 | $ 0.0413810 | 44.4% |
| 28 | | Summer Super Off-Peak | kWh | $ 0.0931305 | $ 0.0672558 | $ (0.0258747) | -27.8% |
| 29 | | Non-Summer On-Peak | kWh | $ 0.2131688 | $ 0.2587390 | $ 0.0455702 | 21.4% |
| 30 | | Non-Summer Off-Peak | kWh | $ 0.0854760 | $ 0.1145133 | $ 0.0290373 | 34.0% |
| 31 | | Non-Summer Super Off-Peak | kWh | $ 0.0854760 | $ 0.0763422 | $ (0.0091338) | -10.7% |
| 32 | | | | | | | |
| 33 | | | | | | | |
| 34 | **2A** | **Small Power Service** | | | | | |
| 35 | | Customer Charge | Bills | $ 23.61 | $ 30.05 | $ 6.43 | 27.2% |
| 36 | | Energy Charge | | | | | |
| 37 | | Summer | kWh | $ 0.1172758 | $ 0.1494267 | $ 0.0321509 | 27.4% |
| 38 | | Non-Summer | kWh | $ 0.0934073 | $ 0.1190147 | $ 0.0256074 | 27.4% |
| 39 | | | | | | | |
| 40 | **2B** | **Small Power Service Time-of-Day Pilot** | | | | | |
| 41 | | Customer Charge | Bills | $ 23.61 | $ 30.05 | $ 6.43 | 27.2% |
| 42 | | Energy Charge | | | | | |
| 43 | | Summer On-Peak | kWh | $ 0.2650882 | $ 0.3375779 | $ 0.0724896 | 27.3% |
| 44 | | Summer Off-Peak | kWh | $ 0.1322264 | $ 0.1683844 | $ 0.0361580 | 27.3% |
| 45 | | Summer Super Off-Peak | kWh | $ 0.0665954 | $ 0.0848062 | $ 0.0182108 | 27.3% |
| 46 | | Non-Summer On-Peak | kWh | $ 0.1381114 | $ 0.1758786 | $ 0.0377673 | 27.3% |
| 47 | | Non-Summer Off-Peak | kWh | $ 0.0865132 | $ 0.1101707 | $ 0.0236574 | 27.3% |
| 48 | | Non-Summer Super Off-Peak | kWh | $ 0.0561538 | $ 0.0715093 | $ 0.0153555 | 27.3% |
| 49 | | | | | | | |
| 50 | | | | | | | |
| 51 | **3B** | **General Power Service Time-of-Use** | | | | | |
| 52 | | Customer Charge | Bills | $ 109.46 | $ 139.27 | $ 29.82 | 27.2% |
| 53 | | Demand Charge | | | | | |
| 54 | | Primary Summer | kW | $ 36.79 | $ 46.80 | $ 10.01 | 27.2% |
| 55 | | Primary Non-Summer | kW | $ 27.33 | $ 34.77 | $ 7.44 | 27.2% |
| 56 | | Secondary Summer | kW | $ 37.27 | $ 47.41 | $ 10.14 | 27.2% |
| 57 | | Secondary Non-Summer | kW | $ 27.83 | $ 35.41 | $ 7.57 | 27.2% |
| 58 | | Energy Charge | | | | | |
| 59 | | Summer On-Peak | kWh | $ 0.0074003 | $ 0.0097284 | $ 0.0023281 | 31.5% |
| 60 | | Summer Off-Peak | kWh | $ 0.0034453 | $ 0.0045291 | $ 0.0010839 | 31.5% |

This schedule is sponsored by PNM Witness Menhorn

**Public Service Company of New Mexico**

**O-3 Comparison of Rates and Riders for Service**

Test Period Ending September 30, 2028

*Summer: Jun-Aug, Non-Summer: Sep-May*

| Line No. | Schedule | Description | Units | Current Rate | Proposed Rate | Difference - Amount | Difference - % |
|---|---|---|---|---|---|---|---|
| 61 | | Non-Summer On-Peak | kWh | $ 0.0061305 | $ 0.0080592 | $ 0.0019286 | 31.5% |
| 62 | | Non-Summer Off-Peak | kWh | $ 0.0034453 | $ 0.0045291 | $ 0.0010839 | 31.5% |
| 63 | | Other Charges | | | | | |
| 64 | | Billable RkVA Summer | kVAR | $ 0.27 | $ 0.27 | - | 0.0% |
| 65 | | Billable RkVA Non-Summer | kVAR | $ 0.27 | $ 0.27 | - | 0.0% |
| 66 | | | | | | | |
| 67 | **3B** | **General Power Service Time-of-Day Pilot** | | | | | |
| 68 | | Customer Charge | Bills | $ 100.95 | $ 139.27 | $ 38.32 | 38.0% |
| 69 | | Demand Charge | | | | | |
| 70 | | Primary Summer | kW | $ 31.41 | $ 51.94 | 20.52 | 65.3% |
| 71 | | Primary Non-Summer | kW | $ 23.09 | $ 36.53 | 13.44 | 58.2% |
| 72 | | Secondary Summer | kW | $ 31.75 | $ 52.62 | 20.87 | 65.7% |
| 73 | | Secondary Non-Summer | kW | $ 23.80 | $ 37.19 | 13.40 | 56.3% |
| 74 | | Energy Charge - Primary | | | | | |
| 75 | | Summer On-Peak | kWh | $ 0.0276383 | $ 0.0135748 | (0.0140635) | -50.9% |
| 76 | | Summer Off-Peak | kWh | $ 0.0135152 | $ 0.0067874 | (0.0067278) | -49.8% |
| 77 | | Summer Super Off-Peak | kWh | $ 0.0068561 | $ 0.0033937 | (0.0034624) | -50.5% |
| 78 | | Non-Summer On-Peak | kWh | $ 0.0154081 | $ 0.0097167 | (0.0056914) | -36.9% |
| 79 | | Non-Summer Off-Peak | kWh | $ 0.0094651 | $ 0.0058300 | (0.0036351) | -38.4% |
| 80 | | Non-Summer Super Off-Peak | kWh | $ 0.0061781 | $ 0.0038867 | (0.0022914) | -37.1% |
| 81 | | Energy Charge - Secondary | | | | | |
| 82 | | Summer On-Peak | kWh | $ 0.0276383 | $ 0.0135748 | (0.0140635) | -50.9% |
| 83 | | Summer Off-Peak | kWh | $ 0.0135152 | $ 0.0067874 | (0.0067278) | -49.8% |
| 84 | | Summer Super Off-Peak | kWh | $ 0.0068561 | $ 0.0033937 | (0.0034624) | -50.5% |
| 85 | | Non-Summer On-Peak | kWh | $ 0.0154081 | $ 0.0097167 | (0.0056914) | -36.9% |
| 86 | | Non-Summer Off-Peak | kWh | $ 0.0094651 | $ 0.0058300 | (0.0036351) | -38.4% |
| 87 | | Non-Summer Super Off-Peak | kWh | $ 0.0061781 | $ 0.0038867 | (0.0022914) | -37.1% |
| 88 | | Other Charges | | | | | |
| 89 | | Billable RkVA Summer | kVAR | $ 0.27 | $ 0.27 | - | 0.0% |
| 90 | | Billable RkVA Non-Summer | kVAR | $ 0.27 | $ 0.27 | - | 0.0% |
| 91 | | | | | | | |
| 92 | **3C** | **General Power Service (Low Load Factor) Time-of-Use** | | | | | |
| 93 | | Customer Charge | Bills | $ 77.20 | $ 98.22 | $ 21.03 | 27.2% |
| 94 | | Demand Charge | | | | | |
| 95 | | Primary Summer | kW | $ 16.60 | $ 21.11 | $ 4.51 | 27.2% |
| 96 | | Primary Non-Summer | kW | $ 12.22 | $ 15.54 | $ 3.32 | 27.2% |
| 97 | | Secondary Summer | kW | $ 17.31 | $ 22.01 | $ 4.70 | 27.2% |
| 98 | | Secondary Non-Summer | kW | $ 12.93 | $ 16.44 | $ 3.51 | 27.2% |
| 99 | | Energy Charge | | | | | |
| 100 | | Summer On-Peak | kWh | $ 0.0674597 | $ 0.0861821 | $ 0.0187224 | 27.8% |
| 101 | | Summer Off-Peak | kWh | $ 0.0304027 | $ 0.0388405 | $ 0.0084378 | 27.8% |
| 102 | | Non-Summer On-Peak | kWh | $ 0.0508175 | $ 0.0649211 | $ 0.0141036 | 27.8% |
| 103 | | Non-Summer Off-Peak | kWh | $ 0.0304027 | $ 0.0388405 | $ 0.0084378 | 27.8% |
| 104 | | Other Charges | | | | | |
| 105 | | Billable RkVA Summer | kVAR | $ 0.27 | $ 0.27 | - | 0.0% |
| 106 | | Billable RkVA Non-Summer | kVAR | $ 0.27 | $ 0.27 | - | 0.0% |
| 107 | | | | | | | |
| 108 | **3C** | **General Power Service Time-of-Day Pilot** | | | | | |
| 109 | | Customer Charge | Bills | $ 100.95 | $ 98.22 | $ (2.72) | -2.7% |
| 110 | | Demand Charge | | | | | |
| 111 | | Primary Summer | kW | $ 31.41 | $ 34.15 | 2.73 | 8.7% |
| 112 | | Primary Non-Summer | kW | $ 23.09 | $ 16.87 | (6.22) | -26.9% |
| 113 | | Secondary Summer | kW | $ 31.75 | $ 35.60 | 3.85 | 12.1% |
| 114 | | Secondary Non-Summer | kW | $ 23.80 | $ 17.84 | (5.95) | -25.0% |
| 115 | | Energy Charge - Primary | | | | | |
| 116 | | Summer On-Peak | kWh | $ 0.0276383 | $ 0.1327662 | 0.1051279 | 380.4% |
| 117 | | Summer Off-Peak | kWh | $ 0.0135152 | $ 0.0663831 | 0.0528679 | 391.2% |
| 118 | | Summer Super Off-Peak | kWh | $ 0.0068561 | $ 0.0331915 | 0.0263354 | 384.1% |
| 119 | | Non-Summer On-Peak | kWh | $ 0.0154081 | $ 0.0854068 | 0.0699987 | 454.3% |

**Public Service Company of New Mexico**

**O-3 Comparison of Rates and Riders for Service**

Test Period Ending September 30, 2028

*Summer: Jun-Aug, Non-Summer: Sep-May*

| Line No. | Schedule | Description | Units | Current Rate | Proposed Rate | Difference - Amount | Difference - % |
|---|---|---|---|---|---|---|---|
| 120 | | Non-Summer Off-Peak | kWh | $ 0.0094651 | $ 0.0512441 | 0.0417790 | 441.4% |
| 121 | | Non-Summer Super Off-Peak | kWh | $ 0.0061781 | $ 0.0341627 | 0.0279846 | 453.0% |
| 122 | | Energy Charge - Secondary | | | | | |
| 123 | | Summer On-Peak | kWh | $ 0.0276383 | $ 0.1327662 | 0.1051279 | 380.4% |
| 124 | | Summer Off-Peak | kWh | $ 0.0135152 | $ 0.0663831 | 0.0528679 | 391.2% |
| 125 | | Summer Super Off-Peak | kWh | $ 0.0068561 | $ 0.0331915 | 0.0263354 | 384.1% |
| 126 | | Non-Summer On-Peak | kWh | $ 0.0154081 | $ 0.0854068 | 0.0699987 | 454.3% |
| 127 | | Non-Summer Off-Peak | kWh | $ 0.0094651 | $ 0.0512441 | 0.0417790 | 441.4% |
| 128 | | Non-Summer Super Off-Peak | kWh | $ 0.0061781 | $ 0.0341627 | 0.0279846 | 453.0% |
| 129 | | Other Charges | | | | | |
| 130 | | Billable RkVA Summer | kVAR | $ 0.27 | $ 0.27 | - | 0.0% |
| 131 | | Billable RkVA Non-Summer | kVAR | $ 0.27 | $ 0.27 | - | 0.0% |
| 132 | | | | | | | |
| 133 | **3D** | **General Power Service Time-of-Use, Municipalities and Counties** | | | | | |
| 134 | | Customer Charge | Bills | $ 106.67 | $ 125.26 | $ 18.59 | 17.4% |
| 135 | | Demand Charge | | | | | |
| 136 | | Primary Summer | kW | $ 31.83 | $ 46.26 | $ 14.43 | 45.3% |
| 137 | | Primary Non-Summer | kW | $ 23.65 | $ 34.37 | $ 10.72 | 45.3% |
| 138 | | Secondary Summer | kW | $ 32.25 | $ 46.87 | $ 14.62 | 45.3% |
| 139 | | Secondary Non-Summer | kW | $ 24.08 | $ 35.00 | $ 10.92 | 45.3% |
| 140 | | Energy Charge | | | | | |
| 141 | | Summer On-Peak | kWh | $ 0.0195882 | $ 0.0068229 | $ (0.0127653) | -65.2% |
| 142 | | Summer Off-Peak | kWh | $ 0.0091194 | $ 0.0031764 | $ (0.0059430) | -65.2% |
| 143 | | Non-Summer On-Peak | kWh | $ 0.0162272 | $ 0.0056522 | $ (0.0105750) | -65.2% |
| 144 | | Non-Summer Off-Peak | kWh | $ 0.0091194 | $ 0.0031764 | $ (0.0059430) | -65.2% |
| 145 | | Other Charges | | | | | |
| 146 | | Billable RkVA Summer | kVAR | $ 0.27 | $ 0.27 | - | 0.0% |
| 147 | | Billable RkVA Non-Summer | kVAR | $ 0.27 | $ 0.27 | - | 0.0% |
| 148 | | | | | | | |
| 149 | **3D** | **General Power Service Time-of-Day Pilot** | | | | | |
| 150 | | Customer Charge | Bills | $ 100.95 | $ 125.26 | $ 24.31 | 24.1% |
| 151 | | Demand Charge | | | | | |
| 152 | | Primary Summer | kW | $ 31.41 | $ 49.56 | 18.15 | 57.8% |
| 153 | | Primary Non-Summer | kW | $ 23.09 | $ 34.15 | 11.05 | 47.9% |
| 154 | | Secondary Summer | kW | $ 31.75 | $ 50.21 | 18.47 | 58.2% |
| 155 | | Secondary Non-Summer | kW | $ 23.80 | $ 34.77 | 10.97 | 46.1% |
| 156 | | Energy Charge- Primary | | | | | |
| 157 | | Summer On-Peak | kWh | $ 0.0276383 | $ 0.0091026 | (0.0185357) | -67.1% |
| 158 | | Summer Off-Peak | kWh | $ 0.0135152 | $ 0.0045513 | (0.0089639) | -66.3% |
| 159 | | Summer Super Off-Peak | kWh | $ 0.0068561 | $ 0.0022756 | (0.0045805) | -66.8% |
| 160 | | Non-Summer On-Peak | kWh | $ 0.0154081 | $ 0.0065582 | (0.0088499) | -57.4% |
| 161 | | Non-Summer Off-Peak | kWh | $ 0.0094651 | $ 0.0039349 | (0.0055302) | -58.4% |
| 162 | | Non-Summer Super Off-Peak | kWh | $ 0.0061781 | $ 0.0026233 | (0.0035548) | -57.5% |
| 163 | | Energy Charge- Secondary | | | | | |
| 164 | | Summer On-Peak | kWh | $ 0.0276383 | $ 0.0091026 | (0.0185357) | -67.1% |
| 165 | | Summer Off-Peak | kWh | $ 0.0135152 | $ 0.0045513 | (0.0089639) | -66.3% |
| 166 | | Summer Super Off-Peak | kWh | $ 0.0068561 | $ 0.0022756 | (0.0045805) | -66.8% |
| 167 | | Non-Summer On-Peak | kWh | $ 0.0154081 | $ 0.0065582 | (0.0088499) | -57.4% |
| 168 | | Non-Summer Off-Peak | kWh | $ 0.0094651 | $ 0.0039349 | (0.0055302) | -58.4% |
| 169 | | Non-Summer Super Off-Peak | kWh | $ 0.0061781 | $ 0.0026233 | (0.0035548) | -57.5% |
| 170 | | Other Charges | | | | | |
| 171 | | Billable RkVA Summer | kVAR | $ 0.27 | $ 0.27 | - | 0.0% |
| 172 | | Billable RkVA Non-Summer | kVAR | $ 0.27 | $ 0.27 | - | 0.0% |
| 173 | | | | | | | |
| 174 | **3E** | **General Power Service (LLF) Time-of-Use, Municipalities and Counties** | | | | | |
| 175 | | Customer Charge | Bills | $ 77.20 | $ 98.22 | $ 21.03 | 27.2% |
| 176 | | Demand Charge | | | $ - | | |
| 177 | | Primary Summer | kW | $ 16.60 | $ 21.11 | $ 4.51 | 27.1% |
| 178 | | Primary Non-Summer | kW | $ 12.22 | $ 15.54 | $ 3.32 | 27.1% |

**Public Service Company of New Mexico**

**O-3 Comparison of Rates and Riders for Service**

Test Period Ending September 30, 2028

*Summer: Jun-Aug, Non-Summer: Sep-May*

| Line No. | Schedule | Description | Units | Current Rate | Proposed Rate | Difference - Amount | Difference - % |
|---|---|---|---|---|---|---|---|
| 179 | | Secondary Summer | kW | $ 17.31 | $ 22.01 | $ 4.70 | 27.1% |
| 180 | | Secondary Non-Summer | kW | $ 12.93 | $ 16.44 | $ 3.51 | 27.1% |
| 181 | | Energy Charge | | | $ - | | |
| 182 | | Summer On-Peak | kWh | $ 0.0674957 | $ 0.0862673 | $ 0.0187717 | 27.8% |
| 183 | | Summer Off-Peak | kWh | $ 0.0304189 | $ 0.0388789 | $ 0.0084600 | 27.8% |
| 184 | | Non-Summer On-Peak | kWh | $ 0.0508446 | $ 0.0649853 | $ 0.0141407 | 27.8% |
| 185 | | Non-Summer Off-Peak | kWh | $ 0.0304189 | $ 0.0388789 | $ 0.0084600 | 27.8% |
| 186 | | Other Charges | | | | | |
| 187 | | Billable RkVA Summer | kVAR | $ 0.27 | $ 0.27 | - | 0.0% |
| 188 | | Billable RkVA Non-Summer | kVAR | $ 0.27 | $ 0.27 | - | 0.0% |
| 189 | | | | | | | |
| 190 | **3E** | **General Power Service Time-of-Day Pilot** | | | | | |
| 191 | | Customer Charge | Bills | $ 100.95 | $ 98.22 | $ (2.72) | -2.7% |
| 192 | | Demand Charge | | | | | |
| 193 | | Primary Summer | kW | $ 31.41 | $ 20.21 | (11.20) | -35.7% |
| 194 | | Primary Non-Summer | kW | $ 23.09 | $ 15.87 | (7.23) | -31.3% |
| 195 | | Secondary Summer | kW | $ 31.75 | $ 21.07 | (10.68) | -33.6% |
| 196 | | Secondary Non-Summer | kW | $ 23.80 | $ 16.78 | (7.02) | -29.5% |
| 197 | | Energy Charge- Primary | | | | | |
| 198 | | Summer On-Peak | kWh | $ 0.0276383 | $ 0.1092119 | 0.0815736 | 295.1% |
| 199 | | Summer Off-Peak | kWh | $ 0.0135152 | $ 0.0546059 | 0.0410908 | 304.0% |
| 200 | | Summer Super Off-Peak | kWh | $ 0.0068561 | $ 0.0273030 | 0.0204469 | 298.2% |
| 201 | | Non-Summer On-Peak | kWh | $ 0.0154081 | $ 0.0766335 | 0.0612254 | 397.4% |
| 202 | | Non-Summer Off-Peak | kWh | $ 0.0094651 | $ 0.0459801 | 0.0365150 | 385.8% |
| 203 | | Non-Summer Super Off-Peak | kWh | $ 0.0061781 | $ 0.0306534 | 0.0244753 | 396.2% |
| 204 | | Energy Charge- Secondary | | | | | |
| 205 | | Summer On-Peak | kWh | $ 0.0276383 | $ 0.1092119 | 0.0815736 | 295.1% |
| 206 | | Summer Off-Peak | kWh | $ 0.0135152 | $ 0.0546059 | 0.0410908 | 304.0% |
| 207 | | Summer Super Off-Peak | kWh | $ 0.0068561 | $ 0.0273030 | 0.0204469 | 298.2% |
| 208 | | Non-Summer On-Peak | kWh | $ 0.0154081 | $ 0.0766335 | 0.0612254 | 397.4% |
| 209 | | Non-Summer Off-Peak | kWh | $ 0.0094651 | $ 0.0459801 | 0.0365150 | 385.8% |
| 210 | | Non-Summer Super Off-Peak | kWh | $ 0.0061781 | $ 0.0306534 | 0.0244753 | 396.2% |
| 211 | | Other Charges | | | | | |
| 212 | | Billable RkVA Summer | kVAR | $ 0.27 | $ 0.27 | - | 0.0% |
| 213 | | Billable RkVA Non-Summer | kVAR | $ 0.27 | $ 0.27 | - | 0.0% |
| 214 | | | | | | | |
| 215 | **3F** | **Non-Residential Charging Station - Pilot** | | | | | |
| 216 | | Customer Charge | Bills | $ 77.20 | $ 103.00 | $ 25.80 | 33.4% |
| 217 | | Energy Charge | | | | | |
| 218 | | Summer On-Peak | kWh | $ 0.1997250 | $ 0.2668001 | $ 0.0670751 | 33.6% |
| 219 | | Summer Off-Peak | kWh | $ 0.0687672 | $ 0.0918618 | $ 0.0230946 | 33.6% |
| 220 | | Non-Summer On-Peak | kWh | $ 0.1478538 | $ 0.1975086 | $ 0.0496548 | 33.6% |
| 221 | | Non-Summer Off-Peak | kWh | $ 0.0687672 | $ 0.0918618 | $ 0.0230946 | 33.6% |
| 222 | | | | | | | |
| 223 | | | | | | | |
| 224 | **4B** | **Large Power Service Time-of-Use** | | | | | |
| 225 | | Customer Charge- Primary & Secondary | Bills | $ 712.98 | $ 921.41 | $ 208.42 | 29.2% |
| 226 | | Customer Charge- Transmission | Bills | $ - | $ 921.41 | $ 921.41 | n/a |
| 227 | | Demand Charge | | | | | |
| 228 | | Primary Summer | kW | $ 30.41 | $ 38.67 | $ 8.26 | 27.2% |
| 229 | | Primary Non-Summer | kW | $ 21.17 | $ 26.92 | $ 5.75 | 27.2% |
| 230 | | Secondary Summer | kW | $ 32.88 | $ 41.80 | $ 8.93 | 27.2% |
| 231 | | Secondary Non-Summer | kW | $ 23.62 | $ 30.03 | $ 6.41 | 27.2% |
| 232 | | Transmission Summer | kW | $ - | $ 15.22 | $ 15.22 | n/a |
| 233 | | Transmission Non-Summer | kW | $ - | $ 9.24 | $ 9.24 | n/a |
| 234 | | Energy Charge- Primary & Secondary | | | | - | |
| 235 | | Summer On-Peak | kWh | $ 0.0219922 | $ 0.0289634 | $ 0.0069712 | 31.7% |
| 236 | | Summer Off-Peak | kWh | $ 0.0114216 | $ 0.0149844 | $ 0.0035627 | 31.2% |
| 237 | | Non-Summer On-Peak | kWh | $ 0.0172695 | $ 0.0226764 | $ 0.0054069 | 31.3% |

**Public Service Company of New Mexico**

**O-3 Comparison of Rates and Riders for Service**

Test Period Ending September 30, 2028

*Summer: Jun-Aug, Non-Summer: Sep-May*

| Line No. | Schedule | Description | Units | Current Rate | Proposed Rate | Difference - Amount | Difference - % |
|---|---|---|---|---|---|---|---|
| 238 | | Non-Summer Off-Peak | kWh | $ 0.0114216 | $ 0.0149955 | $ 0.0035739 | 31.3% |
| 239 | | Energy Charge- Transmission | | | | - | |
| 240 | | Summer On-Peak | kWh | $ - | $ 0.0289634 | $ 0.0289634 | n/a |
| 241 | | Summer Off-Peak | kWh | $ - | $ 0.0149844 | $ 0.0149844 | n/a |
| 242 | | Non-Summer On-Peak | kWh | $ - | $ 0.0226764 | $ 0.0226764 | n/a |
| 243 | | Non-Summer Off-Peak | kWh | $ - | $ 0.0149955 | $ 0.0149955 | n/a |
| 244 | | Other Charges | | | | | |
| 245 | | Billable RkVA Summer | kVAR | $ 0.27 | $ 0.27 | - | 0.0% |
| 246 | | Billable RkVA Non-Summer | kVAR | $ 0.27 | $ 0.27 | - | 0.0% |
| 247 | | | | | | | |
| 248 | **4B** | **Large Power Service Time-of-Day Pilot** | | | | | |
| 249 | | Customer Charge- Primary & Secondary | Bills | $ 712.98 | $ 921.41 | $ 208.42 | 29.2% |
| 250 | | Customer Charge- Transmission | Bills | | $ 921.41 | $ 921.41 | n/a |
| 251 | | Demand Charge | | | | | |
| 252 | | Primary Summer | kW | $ 30.41 | $ 40.51 | $ 10.10 | 33.2% |
| 253 | | Primary Non-Summer | kW | $ 21.17 | $ 27.51 | $ 6.35 | 30.0% |
| 254 | | Secondary Summer | kW | $ 32.88 | $ 45.25 | $ 12.38 | 37.6% |
| 255 | | Secondary Non-Summer | kW | $ 23.62 | $ 31.71 | $ 8.09 | 34.3% |
| 256 | | Transmission Summer | kW | $ - | $ 24.05 | $ 24.05 | n/a |
| 257 | | Transmission Non-Summer | kW | $ - | $ 9.75 | $ 9.75 | n/a |
| 258 | | Energy Charge- Primary | | | | | |
| 259 | | Summer On-Peak | kWh | $ 0.0385991 | $ 0.0405840 | $ 0.0019849 | 5.1% |
| 260 | | Summer Off-Peak | kWh | $ 0.0188350 | $ 0.0202920 | $ 0.0014570 | 7.7% |
| 261 | | Summer Super Off-Peak | kWh | $ 0.0095759 | $ 0.0101460 | $ 0.0005701 | 6.0% |
| 262 | | Non-Summer On-Peak | kWh | $ 0.0195908 | $ 0.0290607 | $ 0.0094700 | 48.3% |
| 263 | | Non-Summer Off-Peak | kWh | $ 0.0117719 | $ 0.0174364 | $ 0.0056645 | 48.1% |
| 264 | | Non-Summer Super Off-Peak | kWh | $ 0.0076864 | $ 0.0116243 | $ 0.0039379 | 51.2% |
| 265 | | Energy Charge- Secondary | | | | | |
| 266 | | Summer On-Peak | kWh | $ 0.0385991 | $ 0.0405840 | $ 0.0019849 | 5.1% |
| 267 | | Summer Off-Peak | kWh | $ 0.0188350 | $ 0.0202920 | $ 0.0014570 | 7.7% |
| 268 | | Summer Super Off-Peak | kWh | $ 0.0095759 | $ 0.0101460 | $ 0.0005701 | 6.0% |
| 269 | | Non-Summer On-Peak | kWh | $ 0.0195908 | $ 0.0290607 | $ 0.0094700 | 48.3% |
| 270 | | Non-Summer Off-Peak | kWh | $ 0.0117719 | $ 0.0174364 | $ 0.0056645 | 48.1% |
| 271 | | Non-Summer Super Off-Peak | kWh | $ 0.0076864 | $ 0.0116243 | $ 0.0039379 | 51.2% |
| 272 | | Energy Charge- Transmission | | | | | |
| 273 | | Summer On-Peak | kWh | $ - | $ 0.0405840 | 0.0405840 | n/a |
| 274 | | Summer Off-Peak | kWh | $ - | $ 0.0202920 | 0.0202920 | n/a |
| 275 | | Summer Super Off-Peak | kWh | $ - | $ 0.0101460 | 0.0101460 | n/a |
| 276 | | Non-Summer On-Peak | kWh | $ - | $ 0.0290607 | 0.0290607 | n/a |
| 277 | | Non-Summer Off-Peak | kWh | $ - | $ 0.0174364 | 0.0174364 | n/a |
| 278 | | Non-Summer Super Off-Peak | kWh | $ - | $ 0.0116243 | 0.0116243 | n/a |
| 279 | | Other Charges | | | | | |
| 280 | | Billable RkVA Summer | kVAR | $ 0.27 | $ 0.27 | $ - | 0.0% |
| 281 | | Billable RkVA Non-Summer | kVAR | $ 0.27 | $ 0.27 | $ - | 0.0% |
| 282 | | | | | | | |
| 283 | | | | | | | |
| 284 | **5B** | **Large Service for Customers >= 8,000 kW min. at 115 kV, 69 kV or 34.5 kV** | | | | | |
| 285 | | Customer Charge | Bills | $ 2,486.72 | $ - | $ (2,486.72) | -100.00% |
| 286 | | Demand Charge | | | | | |
| 287 | | Summer | kW | $ 11.97 | $ - | $ (11.97) | -100.00% |
| 288 | | Non-Summer | kW | $ 7.27 | $ - | $ (7.27) | -100.00% |
| 289 | | Energy Charge | | | | | |
| 290 | | Summer On-Peak | kWh | $ 0.0721001 | $ - | $ (0.0721001) | -100.00% |
| 291 | | Summer Off-Peak | kWh | $ 0.0319507 | $ - | $ (0.0319507) | -100.00% |
| 292 | | Non-Summer On-Peak | kWh | $ 0.0514602 | $ - | $ (0.0514602) | -100.00% |
| 293 | | Non-Summer Off-Peak | kWh | $ 0.0319507 | $ - | $ (0.0319507) | -100.00% |
| 294 | | Other Charges | | | | | |
| 295 | | Billable RkVA Summer | kVAR | $ 0.27 | $ - | $ (0.27) | -100.00% |
| 296 | | Billable RkVA Non-Summer | kVAR | $ 0.27 | $ - | $ (0.27) | -100.00% |

**Public Service Company of New Mexico**

**O-3 Comparison of Rates and Riders for Service**

Test Period Ending September 30, 2028

*Summer: Jun-Aug, Non-Summer: Sep-May*

| Line No. | Schedule | Description | Units | Current Rate | Proposed Rate | Difference - Amount | Difference - % |
|---|---|---|---|---|---|---|---|
| 297 | | | | | | | |
| 298 | | | | | | | |
| 299 | **10A** | **Irrigation Service** | | | | | |
| 300 | | Customer Charge | Bills | $ 17.47 | $ 34.93 | $ 17.47 | 100.0% |
| 301 | | Energy Charge | | | | | |
| 302 | | Summer | kWh | $ 0.0928618 | $ 0.1168008 | $ 0.0239390 | 25.8% |
| 303 | | Non-Summer | kWh | $ 0.0846293 | $ 0.1064460 | $ 0.0218168 | 25.8% |
| 304 | | | | | | | |
| 305 | **10B** | **Irrigation Service Time-of-Use** | | | | | |
| 306 | | Customer Charge | Bills | $ 13.00 | $ 39.00 | $ 26.00 | 200.0% |
| 307 | | Meter Charge | Bills | $ 4.47 | $ 13.40 | $ 8.93 | 200.0% |
| 308 | | Energy Charge | | | | | |
| 309 | | Summer On-Peak | kWh | $ 0.1416941 | $ 0.1791890 | $ 0.0374949 | 26.5% |
| 310 | | Summer Off-Peak | kWh | $ 0.0645303 | $ 0.0816063 | $ 0.0170759 | 26.5% |
| 311 | | Non-Summer On-Peak | kWh | $ 0.1296938 | $ 0.1640132 | $ 0.0343194 | 26.5% |
| 312 | | Non-Summer Off-Peak | kWh | $ 0.0645303 | $ 0.0816063 | $ 0.0170759 | 26.5% |
| 313 | | | | | | | |
| 314 | **10B** | **Irrigation Service Time-of-Day Pilot** | | | | | |
| 315 | | Customer Charge | Bills | $ 13.00 | $ 39.00 | $ 26.00 | 200.0% |
| 316 | | Meter Charge | Bills | $ 4.47 | $ 13.40 | $ 8.93 | 200.0% |
| 317 | | Energy Charge | | | | | |
| 318 | | Summer On-Peak | kWh | $ 0.2002079 | $ 0.2323681 | $ 0.0321602 | 16.1% |
| 319 | | Summer Off-Peak | kWh | $ 0.0966511 | $ 0.1161841 | $ 0.0195330 | 20.2% |
| 320 | | Summer Super Off-Peak | kWh | $ 0.0495553 | $ 0.0580920 | $ 0.0085368 | 17.2% |
| 321 | | Non-Summer On-Peak | kWh | $ 0.1259986 | $ 0.1812001 | $ 0.0552015 | 43.8% |
| 322 | | Non-Summer Off-Peak | kWh | $ 0.0774552 | $ 0.1087201 | $ 0.0312648 | 40.4% |
| 323 | | Non-Summer Super Off-Peak | kWh | $ 0.0507873 | $ 0.0724800 | $ 0.0216928 | 42.7% |
| 324 | | | | | | | |
| 325 | | | | | | | |
| 326 | **11B** | **Water and Sewage Pumping Service Time-of-Use** | | | | | |
| 327 | | Customer Charge | Bills | $ 364.05 | $ 485.75 | $ 121.71 | 33.4% |
| 328 | | Energy Charge | | | | | |
| 329 | | Summer On-Peak | kWh | $ 0.2117830 | $ 0.2828995 | $ 0.0711165 | 33.6% |
| 330 | | Summer Off-Peak | kWh | $ 0.0264729 | $ 0.0353625 | $ 0.0088896 | 33.6% |
| 331 | | Non-Summer On-Peak | kWh | $ 0.1323643 | $ 0.1768121 | $ 0.0444478 | 33.6% |
| 332 | | Non-Summer Off-Peak | kWh | $ 0.0264729 | $ 0.0353625 | $ 0.0088896 | 33.6% |
| 333 | | | | | | | |
| 334 | **11B** | **Water and Sewage Pumping Service Time-of-Day Pilot** | | | | | |
| 335 | | Customer Charge | Bills | $ 364.05 | $ 485.75 | $ 121.71 | 33.4% |
| 336 | | Energy Charge | | | | | |
| 337 | | Summer On-Peak | kWh | $ 0.1226573 | $ 0.1638495 | $ 0.0411922 | 33.6% |
| 338 | | Summer Off-Peak | kWh | $ 0.0626708 | $ 0.0837176 | $ 0.0210468 | 33.6% |
| 339 | | Summer Super Off-Peak | kWh | $ 0.0309970 | $ 0.0414068 | $ 0.0104098 | 33.6% |
| 340 | | Non-Summer On-Peak | kWh | $ 0.0739580 | $ 0.0987954 | $ 0.0248374 | 33.6% |
| 341 | | Non-Summer Off-Peak | kWh | $ 0.0433659 | $ 0.0579295 | $ 0.0145636 | 33.6% |
| 342 | | Non-Summer Super Off-Peak | kWh | $ 0.0298927 | $ 0.0399316 | $ 0.0100389 | 33.6% |
| 343 | | | | | | | |
| 344 | | | | | | | |
| 345 | **15B** | **Large Service for Public Universities >= 8,000 kW min. at 115 kV** | | | | | |
| 346 | | Customer Charge | Bills | $ 5,280.63 | $ 6,719.03 | $ 1,438.40 | 27.2% |
| 347 | | Demand Charge | | | | | |
| 348 | | Summer | kW | $ 12.59 | $ 16.02 | $ 3.43 | 27.3% |
| 349 | | Non-Summer | kW | $ 7.62 | $ 9.69 | $ 2.08 | 27.2% |
| 350 | | Contract Capacity | kW | $ 0.78 | $ 0.99 | $ 0.21 | 27.2% |
| 351 | | Energy Charge | | | | | |
| 352 | | Summer On-Peak | kWh | $ 0.0527077 | $ 0.0672598 | $ 0.0145520 | 27.6% |
| 353 | | Summer Off-Peak | kWh | $ 0.0210418 | $ 0.0268512 | $ 0.0058094 | 27.6% |
| 354 | | Non-Summer On-Peak | kWh | $ 0.0411952 | $ 0.0525687 | $ 0.0113735 | 27.6% |
| 355 | | Non-Summer Off-Peak | kWh | $ 0.0210418 | $ 0.0268512 | $ 0.0058094 | 27.6% |

**Public Service Company of New Mexico**

**O-3 Comparison of Rates and Riders for Service**

Test Period Ending September 30, 2028

*Summer: Jun-Aug, Non-Summer: Sep-May*

| Line No. | Schedule | Description | Units | Current Rate | Proposed Rate | Difference - Amount | Difference - % |
|---|---|---|---|---|---|---|---|
| 356 | | Other Charges | | | | | |
| 357 | | Billable RkVA Summer | kVAR | $ 0.27 | $ 0.27 | - | 0.0% |
| 358 | | Billable RkVA Non-Summer | kVAR | $ 0.27 | $ 0.27 | - | 0.0% |
| 359 | | | | | | | |
| 360 | **15B** | **Large Service for Public Universities >= 8,000 kW min. Time-of-Day Pilot** | | | | | |
| 361 | | Customer Charge | Bills | $ 5,280.63 | $ 6,719.03 | $ 1,438.40 | 27.2% |
| 362 | | Demand Charge | | | | | |
| 363 | | Summer | kW | $ 12.59 | $ 19.50 | $ 6.91 | 54.9% |
| 364 | | Non-Summer | kW | $ 7.62 | $ 10.94 | $ 3.32 | 43.6% |
| 365 | | Contract Capacity | kW | $ 0.78 | $ 0.99 | $ 0.21 | 27.2% |
| 366 | | Energy Charge | | | | | |
| 367 | | Summer On-Peak | kWh | $ 0.0764244 | $ 0.0923588 | $ 0.0159344 | 20.8% |
| 368 | | Summer Off-Peak | kWh | $ 0.0388766 | $ 0.0461794 | $ 0.0073028 | 18.8% |
| 369 | | Summer Super Off-Peak | kWh | $ 0.0189819 | $ 0.0230897 | $ 0.0041078 | |
| 370 | | Non-Summer On-Peak | kWh | $ 0.0408461 | $ 0.0637211 | $ 0.0228750 | 56.0% |
| 371 | | Non-Summer Off-Peak | kWh | $ 0.0239130 | $ 0.0382326 | $ 0.0143197 | 59.9% |
| 372 | | Non-Summer Super Off-Peak | kWh | $ 0.0162555 | $ 0.0254884 | $ 0.0092330 | |
| 373 | | Other Charges | | | | | |
| 374 | | Billable RkVA Summer | kVAR | $ 0.27 | $ 0.27 | $ - | 0.0% |
| 375 | | Billable RkVA Non-Summer | kVAR | $ 0.27 | $ 0.27 | $ - | 0.0% |
| 376 | | | | | | | |
| 377 | | | | | | | |
| 378 | **30B** | **Large Service for Manufacturing >= 30,000 kW min. at Distribution Voltage** | | | | | |
| 379 | | Customer Charge | Bills | $ 51,514.76 | $ 65,546.99 | $ 14,032.23 | 27.2% |
| 380 | | Demand Charge | | | | - | |
| 381 | | Summer | kW | $ 29.28 | $ 37.26 | $ 7.98 | 27.2% |
| 382 | | Non-Summer | kW | $ 20.70 | $ 26.34 | $ 5.64 | 27.2% |
| 383 | | Energy Charge | | | | | |
| 384 | | Summer On-Peak | kWh | $ 0.0164492 | $ 0.0211264 | $ 0.0046772 | 28.4% |
| 385 | | Summer Off-Peak | kWh | $ 0.0080256 | $ 0.0103077 | $ 0.0022820 | 28.4% |
| 386 | | Non-Summer On-Peak | kWh | $ 0.0127552 | $ 0.0163821 | $ 0.0036269 | 28.4% |
| 387 | | Non-Summer Off-Peak | kWh | $ 0.0080256 | $ 0.0103077 | $ 0.0022820 | 28.4% |
| 388 | | Other Charges | | | | | |
| 389 | | Billable RkVA Summer | | $ 0.27 | $ 0.27 | - | 0.0% |
| 390 | | Billable RkVA Non-Summer | | $ 0.27 | $ 0.27 | - | 0.0% |
| 391 | | | | | | | |
| 392 | **30B** | **Large Service for Manufacturing >= 30,000 kW min. Time-of-Day Pilot** | | | | | |
| 393 | | Customer Charge | Bills | $ 51,514.76 | $ 65,546.99 | $ 14,032.23 | 27.2% |
| 394 | | Demand Charge | | | | | |
| 395 | | Summer | kW | $ 29.28 | $ 37.58 | $ 8.30 | 28.3% |
| 396 | | Non-Summer | kW | $ 20.70 | $ 26.70 | $ 6.00 | 29.0% |
| 397 | | Energy Charge | | | | | |
| 398 | | Summer On-Peak | kWh | $ 0.0239439 | $ 0.0280630 | $ 0.0041191 | 17.2% |
| 399 | | Summer Off-Peak | kWh | $ 0.0118644 | $ 0.0140315 | $ 0.0021670 | 18.3% |
| 400 | | Summer Super Off-Peak | kWh | $ 0.0060001 | $ 0.0070157 | $ 0.0010157 | 16.9% |
| 401 | | Non-Summer On-Peak | kWh | $ 0.0148406 | $ 0.0202449 | $ 0.0054043 | 36.4% |
| 402 | | Non-Summer Off-Peak | kWh | $ 0.0089393 | $ 0.0121469 | $ 0.0032076 | 35.9% |
| 403 | | Non-Summer Super Off-Peak | kWh | $ 0.0058539 | $ 0.0080979 | $ 0.0022441 | 38.3% |
| 404 | | Other Charges | | | | | |
| 405 | | Billable RkVA Summer | kVAR | $ 0.27 | $ 0.27 | $ - | 0.0% |
| 406 | | Billable RkVA Non-Summer | kVAR | $ 0.27 | $ 0.27 | $ - | 0.0% |
| 407 | | | | | | | |
| 408 | | | | | | | |
| 409 | **33B** | **Large Service for Station Power Time-of-Use** | | | | | |
| 410 | | Customer Charge | Bills | $ 461.70 | $ 587.47 | $ 125.76 | 27.2% |
| 411 | | Demand Charge | | | | | |
| 412 | | Summer | kW | $ 2.28 | $ 2.90 | $ 0.62 | 27.2% |
| 413 | | Non-Summer | kW | $ 1.57 | $ 2.00 | $ 0.43 | 27.2% |
| 414 | | Energy Charge | | | | | |

**Public Service Company of New Mexico**

**O-3 Comparison of Rates and Riders for Service**

Test Period Ending September 30, 2028

*Summer: Jun-Aug, Non-Summer: Sep-May*

| Line No. | Schedule | Description | Units | Current Rate | Proposed Rate | Difference - Amount | Difference - % |
|---|---|---|---|---|---|---|---|
| 415 | | Summer On-Peak | kWh | $ 0.0577962 | $ 0.0890564 | $ 0.0312601 | 54.1% |
| 416 | | Summer Off-Peak | kWh | $ 0.0286391 | $ 0.0441291 | $ 0.0154900 | 54.1% |
| 417 | | Non-Summer On-Peak | kWh | $ 0.0471958 | $ 0.0727225 | $ 0.0255267 | 54.1% |
| 418 | | Non-Summer Off-Peak | kWh | $ 0.0286391 | $ 0.0441291 | $ 0.0154900 | 54.1% |
| 419 | | Other Charges | | | | | |
| 420 | | Billable RkVA Summer | kVAR | $ 0.27 | $ 0.27 | - | 0.0% |
| 421 | | Billable RkVA Non-Summer | kVAR | $ 0.27 | $ 0.27 | - | 0.0% |
| 422 | | | | | | | |
| 423 | **33B** | **Large Service for Station Power Time-of-Day Pilot** | | | | | |
| 424 | | Customer Charge | Bills | $ 461.70 | $ 587.47 | $ 125.76 | 27.2% |
| 425 | | Demand Charge | | | | | |
| 426 | | Summer | kW | $ 2.28 | $ 4.57 | $ 2.29 | 100.3% |
| 427 | | Non-Summer | kW | $ 1.57 | $ 2.12 | $ 0.54 | 34.6% |
| 428 | | Energy Charge | | | | | |
| 429 | | Summer On-Peak | kWh | $ 0.0903620 | $ 0.1342687 | $ 0.0439067 | 48.6% |
| 430 | | Summer Off-Peak | kWh | $ 0.0444920 | $ 0.0671344 | $ 0.0226423 | 50.9% |
| 431 | | Summer Super Off-Peak | kWh | $ 0.0226192 | $ 0.0335672 | $ 0.0109480 | 48.4% |
| 432 | | Non-Summer On-Peak | kWh | $ 0.0550141 | $ 0.0896462 | $ 0.0346321 | 63.0% |
| 433 | | Non-Summer Off-Peak | kWh | $ 0.0326841 | $ 0.0537877 | $ 0.0211036 | 64.6% |
| 434 | | Non-Summer Super Off-Peak | kWh | $ 0.0219299 | $ 0.0358585 | $ 0.0139285 | 63.5% |
| 435 | | Other Charges | | | | | |
| 436 | | Billable RkVA Summer | kVAR | $ 0.27 | $ 0.27 | $ - | 0.0% |
| 437 | | Billable RkVA Non-Summer | kVAR | $ 0.27 | $ 0.27 | $ - | 0.0% |
| 438 | | | | | | - | |
| 439 | | | | | | - | |
| 440 | **35B** | **Large Power Service >= 3,000 kW Time-of-Use** | | | | - | |
| 441 | | Customer Charge | Bills | $ 3,636.61 | $ 4,627.20 | $ 990.59 | 27.2% |
| 442 | | Demand Charge | | | | - | |
| 443 | | Summer | kW | $ 24.50 | $ 31.17 | 6.67 | 27.2% |
| 444 | | Non-Summer | kW | $ 15.76 | $ 20.06 | 4.29 | 27.2% |
| 445 | | Energy Charge | | | | - | |
| 446 | | Summer On-Peak | kWh | $ 0.0193029 | $ 0.0247591 | $ 0.0054562 | 28.3% |
| 447 | | Summer Off-Peak | kWh | $ 0.0100250 | $ 0.0128587 | $ 0.0028337 | 28.3% |
| 448 | | Non-Summer On-Peak | kWh | $ 0.0151577 | $ 0.0194423 | $ 0.0042845 | 28.3% |
| 449 | | Non-Summer Off-Peak | kWh | $ 0.0100250 | $ 0.0128587 | $ 0.0028337 | 28.3% |
| 450 | | Other Charges | | | | | |
| 451 | | Billable RkVA Summer | kVAR | $ 0.27 | $ 0.27 | - | 0.0% |
| 452 | | Billable RkVA Non-Summer | kVAR | $ 0.27 | $ 0.27 | - | 0.0% |
| 453 | | | | | | | |
| 454 | **35B** | **Large Power Service >= 3,000 kW Time-of-Day Pilot** | | | | | |
| 455 | | Customer Charge | Bills | $ 3,636.61 | $ 4,627.20 | $ 990.59 | 27.2% |
| 456 | | Demand Charge | | | | | |
| 457 | | Summer | kW | $ 24.50 | $ 31.57 | $ 7.07 | 28.8% |
| 458 | | Non-Summer | kW | $ 15.76 | $ 20.31 | $ 4.54 | 28.8% |
| 459 | | Energy Charge | | | | | |
| 460 | | Summer On-Peak | kWh | $ 0.0293634 | $ 0.0336327 | $ 0.0042694 | 14.5% |
| 461 | | Summer Off-Peak | kWh | $ 0.0147889 | $ 0.0168164 | $ 0.0020275 | 13.7% |
| 462 | | Summer Super Off-Peak | kWh | $ 0.0073285 | $ 0.0084082 | $ 0.0010797 | 14.7% |
| 463 | | Non-Summer On-Peak | kWh | $ 0.0180956 | $ 0.0246646 | $ 0.0065690 | 36.3% |
| 464 | | Non-Summer Off-Peak | kWh | $ 0.0104356 | $ 0.0147988 | $ 0.0043631 | 41.8% |
| 465 | | Non-Summer Super Off-Peak | kWh | $ 0.0071002 | $ 0.0098658 | $ 0.0027657 | 39.0% |
| 466 | | Other Charges | | | | | |
| 467 | | Billable RkVA Summer | kVAR | $ 0.27 | $ 0.27 | $ - | 0.0% |
| 468 | | Billable RkVA Non-Summer | kVAR | $ 0.27 | $ 0.27 | $ - | 0.0% |
| 469 | | | | | | | |
| 470 | | | | | | | |
| 471 | **36B** | **Special Service Rate** | | | | | |
| 472 | | Customer Charge | | $ 23,376.08 | $ 77,731.59 | $ 54,355.52 | 232.5% |
| 473 | | Transmission Demand Charge | kW | $ 4.84 | $ 10.20 | $ 5.37 | 110.9% |

**Public Service Company of New Mexico**

**O-3 Comparison of Rates and Riders for Service**

Test Period Ending September 30, 2028

*Summer: Jun-Aug, Non-Summer: Sep-May*

| Line No. | Schedule | Description | Units | Current Rate | Proposed Rate | Difference - Amount | Difference - % |
|---|---|---|---|---|---|---|---|
| 474 | | Contribution to Production Component | kW | | $ 4.48 | $ 4.48 | |
| 475 | | Energy Related Non-Fuel Charge | kWh | $ 0.0264856 | $ 0.0049609 | $ (0.0215247) | -81.3% |
| 476 | | | | | | | |
| 477 | | | | | | | |
| 478 | **37B** | **Data Center Large Power** | | | | | |
| 479 | | Customer Charge | Bills | $ - | $ 29,622.34 | $ 29,622.34 | n/a |
| 480 | | Demand Charge | | | | | |
| 481 | | Summer | kW | $ - | $ 39.46 | $ 39.46 | n/a |
| 482 | | Non-Summer | kW | $ - | $ 27.32 | $ 27.32 | n/a |
| 483 | | Energy Charge | | | | | |
| 484 | | Summer On-Peak | kWh | $ - | $ 0.0078358 | $ 0.0078358 | n/a |
| 485 | | Summer Off-Peak | kWh | $ - | $ 0.0038231 | $ 0.0038231 | n/a |
| 486 | | Non-Summer On-Peak | kWh | $ - | $ 0.0060761 | $ 0.0060761 | n/a |
| 487 | | Non-Summer Off-Peak | kWh | $ - | $ 0.0038231 | $ 0.0038231 | n/a |
| 488 | | Other Charges | | | | | |
| 489 | | Billable RkVA Summer | kVAR | $ - | $ 0.27 | 0.2700000 | n/a |
| 490 | | Billable RkVA Non-Summer | kVAR | $ - | $ 0.27 | 0.2700000 | n/a |
| 491 | | | | | | | |
| 492 | | | | | | | |
| 493 | **38B** | **Large Power at Transmission Service** | | | | | |
| 494 | | Customer Charge | Bills | $ - | $ 29,622.34 | $ 29,622.34 | n/a |
| 495 | | Demand Charge | | | | | |
| 496 | | Summer | kW | $ - | $ 36.31 | $ 36.31 | n/a |
| 497 | | Non-Summer | kW | $ - | $ 25.14 | $ 25.14 | n/a |
| 498 | | Energy Charge | | | | | |
| 499 | | Summer On-Peak | kWh | $ - | $ 0.0078358 | $ 0.0078358 | n/a |
| 500 | | Summer Off-Peak | kWh | $ - | $ 0.0038231 | $ 0.0038231 | n/a |
| 501 | | Non-Summer On-Peak | kWh | $ - | $ 0.0060761 | $ 0.0060761 | n/a |
| 502 | | Non-Summer Off-Peak | kWh | $ - | $ 0.0038231 | $ 0.0038231 | n/a |
| 503 | | Other Charges | | | | | |
| 504 | | Billable RkVA Summer | kVAR | $ - | $ 0.27 | 0.2700000 | n/a |
| 505 | | Billable RkVA Non-Summer | kVAR | $ - | $ 0.27 | 0.2700000 | n/a |
| 506 | | | | | | | |
| 507 | | | | | | | |
| 508 | **6** | **Private Area Lighting Service** | | | | | |
| 509 | | Fixture Rate | | | | | |
| 510 | | 175W MV Lt (73 kWh) - (LA12) | Fixed | $ 14.41 | $ 18.34 | $ 3.93 | 27.3% |
| 511 | | 175W MV Lt (73 kWh) - (LA1A) | Fixed | $ 14.41 | $ 18.34 | $ 3.93 | 27.3% |
| 512 | | 400W MV Lt (162 kWh) - (LAFA) | Fixed | $ 28.99 | $ 36.89 | $ 7.90 | 27.3% |
| 513 | | 400W MH Lt (162 kWh) - (LAMA) | Fixed | $ 30.75 | $ 39.14 | $ 8.38 | 27.3% |
| 514 | | 1,000W MH Lt (380 kWh) - (LANA) | Fixed | $ 67.26 | $ 85.60 | $ 18.34 | 27.3% |
| 515 | | 100W HPS Lt (45 kWh) - (LA32) | Fixed | $ 11.20 | $ 14.26 | $ 3.05 | 27.3% |
| 516 | | 100W HPS Lt (45 kWh) - (LA3A) | Fixed | $ 11.20 | $ 14.26 | $ 3.05 | 27.3% |
| 517 | | 200W HPS Lt (89 kWh) - (LAOA) | Fixed | $ 18.71 | $ 23.81 | $ 5.10 | 27.3% |
| 518 | | 200W HPS Lt (89 kWh) - (LATA) | Fixed | $ 18.71 | $ 23.81 | $ 5.10 | 27.3% |
| 519 | | 400W HPS FL (165 kWh) - (LA42) | Fixed | $ 31.74 | $ 40.39 | $ 8.65 | 27.3% |
| 520 | | 400W HPS FL (165 kWh) (30' Wood Pole) - (LB42) | Fixed | $ 31.74 | $ 40.39 | $ 8.65 | 27.3% |
| 521 | | 400W HPS FL (165 kWh) (35' Wood Pole) - (LC42) | Fixed | $ 31.74 | $ 40.39 | $ 8.65 | 27.3% |
| 522 | | 400W HPS FL (165 kWh) (40' Wood Pole) - (LD42) | Fixed | $ 31.74 | $ 40.39 | $ 8.65 | 27.3% |
| 523 | | 400W HPS Lt (165 kWh) - (LA4A) | Fixed | $ 31.74 | $ 40.39 | $ 8.65 | 27.3% |
| 524 | | 40W LED - Company Owned - (QA12) | Fixed | $ 3.38 | $ 4.30 | $ 0.92 | 27.3% |
| 525 | | 40W LED - Company Owned - (QA1A) | Fixed | $ 3.38 | $ 4.30 | $ 0.92 | 27.3% |
| 526 | | 40W LED - Company Owned - (QA32) | Fixed | $ 3.38 | $ 4.30 | $ 0.92 | 27.3% |
| 527 | | 40W LED - Company Owned - (QA3A) | Fixed | $ 3.38 | $ 4.30 | $ 0.92 | 27.3% |
| 528 | | 120W LED - Company Owned - (QAFA) | Fixed | $ 10.16 | $ 12.93 | $ 2.77 | 27.3% |
| 529 | | 120W LED - Company Owned - (QAOA) | Fixed | $ 10.16 | $ 12.93 | $ 2.77 | 27.3% |
| 530 | | 120W LED - Company Owned - (QATA) | Fixed | $ 10.16 | $ 12.93 | $ 2.77 | 27.3% |
| 531 | | 200W LED - Company Owned - (QB42) | Fixed | $ 16.91 | $ 21.52 | $ 4.61 | 27.3% |
| 532 | | 200W LED - Company Owned - (QC42) | Fixed | $ 16.91 | $ 21.52 | $ 4.61 | 27.3% |

**Public Service Company of New Mexico**

**O-3 Comparison of Rates and Riders for Service**

Test Period Ending September 30, 2028

*Summer: Jun-Aug, Non-Summer: Sep-May*

| Line No. | Schedule | Description | Units | Current Rate | Proposed Rate | Difference - Amount | Difference - % |
|---|---|---|---|---|---|---|---|
| 533 | | 250W LED - Company Owned - (QA42) | Fixed | $ 21.16 | $ 26.92 | $ 5.77 | 27.3% |
| 534 | | Pole Charge | | | | | |
| 535 | | Pole Charge (wood) - (L0LA) | Fixed | $ 3.27 | $ 4.16 | $ 0.89 | 27.3% |
| 536 | | | | | | | |
| 537 | | | | | | | |
| 538 | **20** | **Company Owned Integrated System Streetlighting and Floodlighting Service - New Installation** | | | | | |
| 539 | | **Fixture Charge** | | | | | |
| 540 | | 175W Mercury Vapor and Streetlight - Co Own | Fixed | $ 16.25 | $ 21.70 | $ 5.44 | 33.5% |
| 541 | | 400W Mercury Vapor Streetlight - Co Own | Fixed | $ 24.68 | $ 32.94 | $ 8.26 | 33.5% |
| 542 | | 55W Low Pressure Sodium Street Light - Co Own | Fixed | $ 14.60 | $ 19.49 | $ 4.89 | 33.5% |
| 543 | | 135W Low Pressure Sodium Street Light - Co Own | Fixed | $ 19.69 | $ 26.29 | $ 6.59 | 33.5% |
| 544 | | 70W High Pressure Sodium Street Light - Co Own | Fixed | $ 12.59 | $ 16.80 | $ 4.21 | 33.5% |
| 545 | | 100W High Pressure Sodium Street Light - Co Own | Fixed | $ 13.82 | $ 18.44 | $ 4.63 | 33.5% |
| 546 | | 200W High Pressure Sodium Street Light - Co Own | Fixed | $ 17.23 | $ 23.00 | $ 5.77 | 33.5% |
| 547 | | 250W High Pressure Sodium Street Light - Co Own | Fixed | $ 19.88 | $ 26.53 | $ 6.65 | 33.5% |
| 548 | | 400W High Pressure Sodium Flood Light - Co Own | Fixed | $ 24.95 | $ 33.30 | $ 8.35 | 33.5% |
| 549 | | 400W High Pressure Sodium Street Light - Co Own | Fixed | $ 24.95 | $ 33.30 | $ 8.35 | 33.5% |
| 550 | | 10W LED - Company Owned | Fixed | $ 0.82 | $ 1.09 | $ 0.27 | 33.4% |
| 551 | | 20W LED - Company Owned | Fixed | $ 1.63 | $ 2.18 | $ 0.55 | 33.4% |
| 552 | | 30W LED - Company Owned | Fixed | $ 2.46 | $ 3.28 | $ 0.82 | 33.5% |
| 553 | | 40W LED - Company Owned | Fixed | $ 3.28 | $ 4.37 | $ 1.10 | 33.5% |
| 554 | | 50W LED - Company Owned | Fixed | $ 4.09 | $ 5.46 | $ 1.37 | 33.4% |
| 555 | | 60W LED - Company Owned | Fixed | $ 4.91 | $ 6.55 | $ 1.64 | 33.4% |
| 556 | | 70W LED - Company Owned | Fixed | $ 5.74 | $ 7.65 | $ 1.92 | 33.4% |
| 557 | | 80W LED - Company Owned | Fixed | $ 6.55 | $ 8.74 | $ 2.19 | 33.4% |
| 558 | | 90W LED - Company Owned | Fixed | $ 7.37 | $ 9.83 | $ 2.46 | 33.4% |
| 559 | | 100W LED - Company Owned | Fixed | $ 8.18 | $ 10.93 | $ 2.74 | 33.5% |
| 560 | | 110W LED - Company Owned | Fixed | $ 9.01 | $ 12.03 | $ 3.01 | 33.4% |
| 561 | | 120W LED - Company Owned | Fixed | $ 9.83 | $ 13.12 | $ 3.29 | 33.5% |
| 562 | | 130W LED - Company Owned | Fixed | $ 10.64 | $ 14.20 | $ 3.56 | 33.4% |
| 563 | | 140W LED - Company Owned | Fixed | $ 11.46 | $ 15.30 | $ 3.84 | 33.5% |
| 564 | | 150W LED - Company Owned | Fixed | $ 12.28 | $ 16.39 | $ 4.11 | 33.5% |
| 565 | | 160W LED - Company Owned | Fixed | $ 13.11 | $ 17.49 | $ 4.38 | 33.4% |
| 566 | | 170W LED - Company Owned | Fixed | $ 13.92 | $ 18.58 | $ 4.65 | 33.4% |
| 567 | | 180W LED - Company Owned | Fixed | $ 14.74 | $ 19.67 | $ 4.93 | 33.5% |
| 568 | | 190W LED - Company Owned | Fixed | $ 15.55 | $ 20.75 | $ 5.20 | 33.4% |
| 569 | | 200W LED - Company Owned | Fixed | $ 16.38 | $ 21.87 | $ 5.48 | 33.5% |
| 570 | | 210W LED - Company Owned | Fixed | $ 17.20 | $ 22.95 | $ 5.75 | 33.4% |
| 571 | | 220W LED - Company Owned | Fixed | $ 18.01 | $ 24.04 | $ 6.02 | 33.4% |
| 572 | | 230W LED - Company Owned | Fixed | $ 18.83 | $ 25.13 | $ 6.30 | 33.4% |
| 573 | | 240W LED - Company Owned | Fixed | $ 19.66 | $ 26.23 | $ 6.57 | 33.4% |
| 574 | | 250W LED - Company Owned | Fixed | $ 20.47 | $ 27.33 | $ 6.85 | 33.5% |
| 575 | | 260W LED - Company Owned | Fixed | $ 21.29 | $ 28.42 | $ 7.13 | 33.5% |
| 576 | | 270W LED - Company Owned | Fixed | $ 22.11 | $ 29.50 | $ 7.39 | 33.4% |
| 577 | | 280W LED - Company Owned | Fixed | $ 22.92 | $ 30.59 | $ 7.66 | 33.4% |
| 578 | | 290W LED - Company Owned | Fixed | $ 23.75 | $ 31.69 | $ 7.94 | 33.4% |
| 579 | | 300W LED - Company Owned | Fixed | $ 24.57 | $ 32.78 | $ 8.21 | 33.4% |
| 580 | | 310W LED - Company Owned | Fixed | $ 25.38 | $ 33.87 | $ 8.49 | 33.4% |
| 581 | | 320W LED - Company Owned | Fixed | $ 26.20 | $ 34.96 | $ 8.76 | 33.4% |
| 582 | | 330W LED - Company Owned | Fixed | $ 27.03 | $ 36.06 | $ 9.04 | 33.4% |
| 583 | | 340W LED - Company Owned | Fixed | $ 27.84 | $ 37.15 | $ 9.31 | 33.4% |

**Public Service Company of New Mexico**

**O-3 Comparison of Rates and Riders for Service**

Test Period Ending September 30, 2028

*Summer: Jun-Aug, Non-Summer: Sep-May*

| Line No. | Schedule | Description | Units | Current Rate | Proposed Rate | Difference - Amount | Difference - % |
|---|---|---|---|---|---|---|---|
| 584 | | 350W LED - Company Owned | Fixed | $ 28.66 | $ 38.24 | $ 9.58 | 33.4% |
| 585 | | 360W LED - Company Owned | Fixed | $ 29.47 | $ 39.33 | $ 9.85 | 33.4% |
| 586 | | 370W LED - Company Owned | Fixed | $ 30.30 | $ 40.43 | $ 10.13 | 33.4% |
| 587 | | 380W LED - Company Owned | Fixed | $ 31.12 | $ 41.52 | $ 10.40 | 33.4% |
| 588 | | 390W LED - Company Owned | Fixed | $ 31.93 | $ 42.61 | $ 10.68 | 33.4% |
| 589 | | 400W LED - Company Owned | Fixed | $ 32.75 | $ 43.72 | $ 10.97 | 33.5% |
| 590 | | **Pole Charge** | | | | | |
| 591 | | Wood Pole | Fixed | $ 5.59 | $ 7.46 | $ 1.87 | 33.5% |
| 592 | | Non-Wood Pole | Fixed | $ 10.86 | $ 14.50 | $ 3.64 | 33.5% |
| 593 | | **Metered Lighting Energy Charge** | | | | | |
| 594 | | Company-Owned | kWh | $ 0.2232448 | $ 0.2923148 | $ 0.07 | 30.9% |
| 595 | | | | | | | |
| 596 | **20** | **Customer Owned Integrated System Streetlighting and Floodlighting Service - New Installation** | | | | | |
| 597 | | **Fixture Charge** | | | | | |
| 598 | | 175W Mercury Vapor and Streetlight - Cu Own | Fixed | $ 6.37 | $ 8.34 | $ 1.97 | 31.0% |
| 599 | | 400W Mercury Vapor Streetlight - Cu Own | Fixed | $ 14.14 | $ 18.52 | $ 4.38 | 31.0% |
| 600 | | 55W Low Pressure Sodium Street Light - Cu Own | Fixed | $ 2.45 | $ 3.20 | $ 0.75 | 30.8% |
| 601 | | 135W Low Pressure Sodium Street Light - Cu Own | Fixed | $ 5.49 | $ 7.19 | $ 1.69 | 30.8% |
| 602 | | 70W High Pressure Sodium Street Light - Cu Own | Fixed | $ 2.70 | $ 3.54 | $ 0.84 | 31.0% |
| 603 | | 100W High Pressure Sodium Street Light - Cu Own | Fixed | $ 3.93 | $ 5.15 | $ 1.22 | 31.0% |
| 604 | | 200W High Pressure Sodium Street Light - Cu Own | Fixed | $ 7.77 | $ 10.17 | $ 2.40 | 30.8% |
| 605 | | 250W High Pressure Sodium Street Light - Cu Own | Fixed | $ 9.33 | $ 12.23 | $ 2.89 | 31.0% |
| 606 | | 400W High Pressure Sodium Flood Light - Cu Own | Fixed | $ 14.40 | $ 18.87 | $ 4.47 | 31.0% |
| 607 | | 400W High Pressure Sodium Street Light - Cu Own | Fixed | $ 14.40 | $ 18.87 | $ 4.47 | 31.0% |
| 608 | | 10W LED - Customer Owned | Fixed | $ 0.23 | $ 0.30 | $ 0.07 | 31.0% |
| 609 | | 20W LED - Customer Owned | Fixed | $ 0.46 | $ 0.60 | $ 0.14 | 30.8% |
| 610 | | 30W LED - Customer Owned | Fixed | $ 0.69 | $ 0.90 | $ 0.21 | 30.8% |
| 611 | | 40W LED - Customer Owned | Fixed | $ 0.92 | $ 1.20 | $ 0.29 | 31.0% |
| 612 | | 50W LED - Customer Owned | Fixed | $ 1.15 | $ 1.51 | $ 0.36 | 31.0% |
| 613 | | 60W LED - Customer Owned | Fixed | $ 1.38 | $ 1.81 | $ 0.43 | 31.0% |
| 614 | | 70W LED - Customer Owned | Fixed | $ 1.61 | $ 2.11 | $ 0.50 | 31.0% |
| 615 | | 80W LED - Customer Owned | Fixed | $ 1.84 | $ 2.41 | $ 0.57 | 31.0% |
| 616 | | 90W LED - Customer Owned | Fixed | $ 2.07 | $ 2.71 | $ 0.64 | 31.0% |
| 617 | | 100W LED - Customer Owned | Fixed | $ 2.30 | $ 3.01 | $ 0.71 | 31.0% |
| 618 | | 110W LED - Customer Owned | Fixed | $ 2.53 | $ 3.31 | $ 0.78 | 31.0% |
| 619 | | 120W LED - Customer Owned | Fixed | $ 2.76 | $ 3.61 | $ 0.86 | 31.0% |
| 620 | | 130W LED - Customer Owned | Fixed | $ 2.99 | $ 3.92 | $ 0.93 | 31.0% |
| 621 | | 140W LED - Customer Owned | Fixed | $ 3.22 | $ 4.22 | $ 1.00 | 31.0% |
| 622 | | 150W LED - Customer Owned | Fixed | $ 3.45 | $ 4.51 | $ 1.06 | 30.8% |
| 623 | | 160W LED - Customer Owned | Fixed | $ 3.68 | $ 4.82 | $ 1.14 | 31.0% |
| 624 | | 170W LED - Customer Owned | Fixed | $ 3.91 | $ 5.11 | $ 1.21 | 30.8% |
| 625 | | 180W LED - Customer Owned | Fixed | $ 4.14 | $ 5.42 | $ 1.28 | 31.0% |
| 626 | | 190W LED - Customer Owned | Fixed | $ 4.36 | $ 5.71 | $ 1.35 | 31.0% |
| 627 | | 200W LED - Customer Owned | Fixed | $ 4.59 | $ 6.00 | $ 1.41 | 30.8% |
| 628 | | 210W LED - Customer Owned | Fixed | $ 4.82 | $ 6.31 | $ 1.49 | 31.0% |
| 629 | | 220W LED - Customer Owned | Fixed | $ 5.05 | $ 6.60 | $ 1.56 | 30.8% |
| 630 | | 230W LED - Customer Owned | Fixed | $ 5.28 | $ 6.90 | $ 1.63 | 30.8% |
| 631 | | 240W LED - Customer Owned | Fixed | $ 5.51 | $ 7.20 | $ 1.70 | 30.8% |
| 632 | | 250W LED - Customer Owned | Fixed | $ 5.74 | $ 7.51 | $ 1.78 | 31.0% |
| 633 | | 260W LED - Customer Owned | Fixed | $ 5.97 | $ 7.81 | $ 1.84 | 30.8% |
| 634 | | 270W LED - Customer Owned | Fixed | $ 6.20 | $ 8.11 | $ 1.91 | 30.8% |
| 635 | | 280W LED - Customer Owned | Fixed | $ 6.43 | $ 8.41 | $ 1.98 | 30.8% |
| 636 | | 290W LED - Customer Owned | Fixed | $ 6.66 | $ 8.71 | $ 2.05 | 30.8% |
| 637 | | 300W LED - Customer Owned | Fixed | $ 6.89 | $ 9.01 | $ 2.12 | 30.8% |

**Public Service Company of New Mexico**

**O-3 Comparison of Rates and Riders for Service**

Test Period Ending September 30, 2028

*Summer: Jun-Aug, Non-Summer: Sep-May*

| Line No. | Schedule | Description | Units | Current Rate | Proposed Rate | Difference - Amount | Difference - % |
|---|---|---|---|---|---|---|---|
| 638 | | 310W LED - Customer Owned | Fixed | $ 7.12 | $ 9.32 | $ 2.21 | 31.0% |
| 639 | | 320W LED - Customer Owned | Fixed | $ 7.35 | $ 9.61 | $ 2.26 | 30.8% |
| 640 | | 330W LED - Customer Owned | Fixed | $ 7.58 | $ 9.91 | $ 2.34 | 30.8% |
| 641 | | 340W LED - Customer Owned | Fixed | $ 7.81 | $ 10.21 | $ 2.41 | 30.8% |
| 642 | | 350W LED - Customer Owned | Fixed | $ 8.04 | $ 10.51 | $ 2.48 | 30.8% |
| 643 | | 360W LED - Customer Owned | Fixed | $ 8.27 | $ 10.81 | $ 2.55 | 30.8% |
| 644 | | 370W LED - Customer Owned | Fixed | $ 8.50 | $ 11.11 | $ 2.62 | 30.8% |
| 645 | | 380W LED - Customer Owned | Fixed | $ 8.73 | $ 11.42 | $ 2.69 | 30.8% |
| 646 | | 390W LED - Customer Owned | Fixed | $ 8.96 | $ 11.72 | $ 2.76 | 30.8% |
| 647 | | 400W LED - Customer Owned | Fixed | $ 9.19 | $ 12.02 | $ 2.83 | 30.8% |
| 648 | | 460W LED - Customer Owned | Fixed | $ 10.56 | $ 13.84 | $ 3.28 | 31.0% |
| 649 | | 470W LED - Customer Owned | Fixed | $ 10.79 | $ 14.14 | $ 3.35 | 31.0% |
| 650 | | **Metered Lighting Energy Charge** | | | | | |
| 651 | | Customer-Owned | kWh | $ 0.0645872 | $ 0.0832178 | $ 0.02 | 28.8% |

# PNM Schedule O-4

Explanation of proposed changes to existing rate schedules

**28th Revised 1A – Residential Service**

Changes to this tariff, including rates, are reflected in the Advice Notice filed with this application. The changes relating to a new low-income rate option are explained in the Direct Testimony of PNM witnesses Aguirre and Babej. Proposed changes also include the elimination of the participation cap for the Whole House Electric Vehicle Rate, and the requirement to take service under this rate option for customers who received a rebate towards the purchase of an EV charger, as explained in the Direct Testimony of PNM Witness Aguirre. The remaining language revisions are intended solely to make the tariff clearer and more concise.

**26th Revised 1B – Residential Service**

Changes to this tariff, including rates, are reflected in the Advice Notice filed with this application. The changes to the tariff incorporating time-of-day rates are explained in the Direct Testimony of PNM witnesses Aguirre and Menhorn. All other language revisions are intended to make the tariff clearer and more concise.

**27th Revised 2A – Small Power Service**

Changes to this tariff, including rates, are reflected in the Advice Notice filed with this application. All other language revisions are intended to make the tariff clearer and more concise.

**27th Revised 2B – Small Power Service Time-of-Use Rate**

Changes to this tariff, including rates, are reflected in the Advice Notice filed with this application. The changes to the tariff incorporating time-of-day rates are explained in the Direct Testimony of PNM witness Menhorn. All other language revisions are intended to make the tariff clearer and more concise.

**26th Revised 3B – General Power Service Time-of-Use Rate**

Changes to this tariff, including rates, are reflected in the Advice Notice filed with this application. The changes to the tariff incorporating time-of-day rates are explained in the Direct Testimony of PNM witness Menhorn. All other language revisions are intended to make the tariff clearer and more concise.

**9th Revised 3C – General Power Service (Low Load Factor) Time-of-Use Rate**

Changes to this tariff, including rates, are reflected in the Advice Notice filed with this application. The changes to the tariff incorporating time-of-day rates are explained in the Direct Testimony of PNM witness Menhorn. All other language revisions are intended to make the tariff clearer and more concise.

**5th Revised 3D – Municipalities and Counties General Power Service Time-of-Use Rate**

Changes to this tariff, including rates, are reflected in the Advice Notice filed with this application. The changes to the tariff incorporating time-of-day rates are explained in the Direct Testimony of PNM witness Menhorn. All other language revisions are intended to make the tariff clearer and more concise.

**5th Revised 3E – Municipalities and Counties General Power Service (Low Load Factor) Time-of-Use Rate**

Changes to this tariff, including rates, are reflected in the Advice Notice filed with this application. The changes to the tariff incorporating time-of-day rates are explained in the Direct Testimony of PNM witness Menhorn. All other language revisions are intended to make the tariff clearer and more concise.

**5th Revised 3F – Non-residential Charging Station - Pilot**

The only changes made to this tariff are to the rates, which are reflected in the Advice Notice filed with this application.

**25th Revised 4B – Large Power Service Time-of-Use Rate**

Changes to this tariff, including rates, are reflected in the Advice Notice filed with this application. The changes to the tariff incorporating time-of-day rates are explained in the Direct Testimony of PNM witness Menhorn. Revisions to the tariff also include the addition of a new Transmission Service Level rate and establishing a cap of 30MW under the applicability section as explained in the Direct Testimony of PNM Witness Aguirre. All other language revisions are intended to make the tariff clearer and more concise.

**27th Revised 5B – Large Service for Customers ≥ 8,000 kW at 115kV, 69kV, or 34.5kV**

PNM is proposing to eliminate this tariff.

**20th Revised 6 – Private Area Lighting Service**

The only changes made to this tariff are to the rates, which are reflected in the Advice Notice filed with this application.

**25th Revised 10A – Irrigation Service**

Changes to this tariff, including rates, are reflected in the Advice Notice filed with this application. All other language revisions are intended to make the tariff clearer and more concise.

**25th Revised 10B – Irrigation Service Time-of-Use Rate**

Changes to this tariff, including rates, are reflected in the Advice Notice filed with this application. The changes to the tariff incorporating time-of-day rates are explained in the Direct Testimony of PNM witness Menhorn. All other language revisions are intended to make the tariff clearer and more concise.

**24th Revised 11B – Water and Sewage Pumping Time-of-Use Rate**

Changes to this tariff, including rates, are reflected in the Advice Notice filed with this application. The changes to the tariff incorporating time-of-day rates are explained in the Direct Testimony of PNM witness Menhorn. All other language revisions are intended to make the tariff clearer and more concise.

**15th Revised 15B – Large Service for Public Universities ≥ 8,000 kW with Customer-Owned Generation Facilities Served at 115kV**

Changes to this tariff, including rates, are reflected in the Advice Notice filed with this application. The changes to the tariff incorporating time-of-day rates are explained in the Direct Testimony of PNM witness Menhorn. All other language revisions are intended to make the tariff clearer and more concise.

**21st Revised 20 – Integrated System Streetlighting and Floodlighting Service New Installations**

The only changes made to this tariff are to the rates, which are reflected in the Advice Notice filed with this application.

**5th Revised 30B – Large Service for Manufacturing ≥ 30,000 kW at Distribution Voltage**

Changes to this tariff, including rates, are reflected in the Advice Notice filed with this application. All other language revisions are intended to make the tariff clearer and more concise.

**8th Revised 33B – Large Service for Station Power (Time-of-Use)**

Changes to this tariff, including rates, are reflected in the Advice Notice filed with this application. The changes to the tariff incorporating time-of-day rates are explained in the Direct Testimony of PNM witness Menhorn. All other language revisions are intended to make the tariff clearer and more concise.

**6th Revised 35B – Large Power Service ≥ 3,000 kW**

Changes to this tariff, including rates, are reflected in the Advice Notice filed with this application. The changes to the tariff incorporating time-of-day rates are explained in the Direct Testimony of PNM witness Menhorn. All other language revisions are intended to make the tariff clearer and more concise.

**8th Revised 36B – Large Power Service ≥ 3,000 kW**

Changes to this tariff, including rates, are reflected in the Advice Notice filed with this application. Some minor language revisions were made for clarification purposes.

**12th Revised Rider 23 – Fuel and Purchased Power Cost Adjustment Clause ("FPPCAC")**

Changes to this tariff include a change in the applicability provisions to remove Rate 5B and add Rates 37B and 38B as proposed in this case, as well as adjustments to the loss factor as explained in the Direct Testimony of PNM Witness Hayat. All other language revisions are intended to make the tariff clearer and more concise.

**3rd Revised Rider 45 – Economic Development Rider ("EDR") Applicable to Rate Nos. 4B, 30B and 35B**

Changes to this tariff include a change in the applicability provisions to remove Rate 5B and add Rate 38B. All other language revisions are intended to make the tariff clearer and more concise.

**2nd Revised Rider 49 – Production Cost Allocation Rider**

Changes to this tariff in the definitions section are explained in the Direct Testimony of PNM witness Aguirre. All other language revisions are intended to make the tariff clearer and more concise.

**4th Revised Rider 56 – Community Solar Rider**

Changes to this tariff, including rates, are reflected in the Advice Notice filed with this application.

**1st Revised Rider 60 Grid Modernization Rider,**

Changes include revisions to include the proposed new Rate No. 37B and Rate No. 38B and to update the projected rates effective with the base rates proposed in this case.

Key operating statistics

# PNM P Series Schedules

Schedule P-1: Peak demand information

Schedule P-2: Plant in service

Schedule P-3: Property retirements and property investments information

Schedule P-4: Operation and maintenance expense information

Schedule P-5: Customer information

Schedule P-6: Weather data

Schedule P-7: Power plant maintenance information

Schedule P-8: Customer service interruption information

Schedule P-9: Line loss information

Schedule P-10: Reliability indices information

Schedule P-11: Reserve margin information

Schedule P-12: Fuel statistics information

# PNM Schedule P-1

Peak demand information

**Public Service Company of New Mexico**

**P-1 Total System and Retail Peak Demand Information at Generation and Distribution (Meter)**

Test Period Ending September 30, 2028

| Line No. | Month | Total System Coincident Demand in MW at Distribution* | PNM Retail Jurisdiction Coincident Demand in MW at Distribution* | Total System Coincident Demand in MW at Generation | PNM Retail Jurisdiction Coincident Demand in MW at Generation |
|---|---|---|---|---|---|
| 1 | Oct-27 | 1,623.79 | 1,623.79 | 1,811.61 | 1,811.61 |
| 2 | Nov-27 | 1,406.10 | 1,406.10 | 1,604.38 | 1,604.38 |
| 3 | Dec-27 | 1,493.14 | 1,493.14 | 1,820.61 | 1,820.61 |
| 4 | Jan-28 | 1,562.66 | 1,562.66 | 1,815.57 | 1,815.57 |
| 5 | Feb-28 | 1,549.43 | 1,549.43 | 1,729.46 | 1,729.46 |
| 6 | Mar-28 | 1,472.11 | 1,472.11 | 1,672.43 | 1,672.43 |
| 7 | Apr-28 | 1,481.62 | 1,481.62 | 1,700.28 | 1,700.28 |
| 8 | May-28 | 1,675.24 | 1,675.24 | 1,900.69 | 1,900.69 |
| 9 | Jun-28 | 2,092.78 | 2,092.78 | 2,445.54 | 2,445.54 |
| 10 | Jul-28 | 2,291.90 | 2,291.90 | 2,604.53 | 2,604.53 |
| 11 | Aug-28 | 2,130.30 | 2,130.30 | 2,353.41 | 2,353.41 |
| 12 | Sep-28 | 2,041.72 | 2,041.72 | 2,199.37 | 2,199.37 |

* Demand at Distribution (Meter) is from bottom-up hourly models. It does not include adjustments for losses and unaccounted for energy (UFE).

This schedule is sponsored by PNM Witness Hayat

**Public Service Company of New Mexico**

**P-1 Total System and Retail Peak Demand Information at Generation and Distribution (Meter)**

Test Period Ending September 30, 2028

This schedule is sponsored by PNM Witness Hayat

| Line No. | Description | Oct-27 | Nov-27 | Dec-27 | Jan-28 | Feb-28 | Mar-28 | Apr-28 | May-28 | Jun-28 | Jul-28 | Aug-28 | Sep-28 |
|---|---|---|---|---|---|---|---|---|---|---|---|---|---|
| | **Coincident Demand at Distribution in MW** | | | | | | | | | | | | |
| 1 | 1 - Residential | 545.72 | 490.45 | 558.80 | 592.99 | 546.54 | 461.74 | 424.37 | 520.57 | 823.78 | 906.78 | 866.36 | 776.15 |
| 2 | 2 - Small Power | 143.69 | 99.05 | 97.76 | 107.74 | 112.78 | 107.73 | 111.09 | 134.79 | 171.17 | 211.02 | 170.59 | 161.74 |
| 3 | 3 - General Power | 283.29 | 203.51 | 194.92 | 213.93 | 215.69 | 216.37 | 226.69 | 273.43 | 321.69 | 364.00 | 316.94 | 315.30 |
| 4 | 4 - Large Power | 135.85 | 109.53 | 107.46 | 111.02 | 113.09 | 115.64 | 125.36 | 132.43 | 146.71 | 150.43 | 137.36 | 141.97 |
| 5 | Large Service | 0.00 | 0.00 | 0.00 | 0.00 | 0.00 | 0.00 | 0.00 | 0.00 | 0.00 | 0.00 | 0.00 | 0.00 |
| 6 | 15 - Universities 115 kV | 11.62 | 5.39 | 2.40 | 3.85 | 1.41 | 2.21 | 7.34 | 13.04 | 12.73 | 13.95 | 11.95 | 12.76 |
| 7 | 30 - Manufacturing (>30 MW) | 84.06 | 83.33 | 83.10 | 82.72 | 83.03 | 83.26 | 83.35 | 83.84 | 84.09 | 84.52 | 83.86 | 84.02 |
| 8 | 33 - Station Service | 0.00 | 1.57 | 1.47 | 1.18 | 2.05 | 1.49 | 1.77 | 1.43 | 2.10 | 0.00 | 0.00 | 1.65 |
| 9 | 35 - Large Power >=3,000kW | 34.36 | 34.00 | 31.70 | 30.44 | 35.44 | 33.87 | 33.71 | 36.96 | 37.42 | 36.73 | 36.69 | 36.59 |
| 10 | 36 - Special Service - Renewable | 349.46 | 356.03 | 381.56 | 402.75 | 419.20 | 433.19 | 446.32 | 472.50 | 483.06 | 495.55 | 494.30 | 501.33 |
| 11 | 10 - Irrigation | 3.07 | 1.38 | 0.38 | 0.49 | 1.48 | 1.61 | 3.17 | 4.11 | 4.86 | 4.77 | 4.84 | 3.70 |
| 12 | 11 - Water/Sewage Pumping | 32.41 | 12.01 | 23.54 | 5.74 | 8.91 | 5.19 | 8.66 | 1.90 | 4.93 | 23.89 | 7.15 | 6.26 |
| 13 | 6 - Private Lighting | 0.07 | 2.69 | 2.69 | 2.68 | 2.68 | 2.67 | 2.67 | 0.07 | 0.07 | 0.07 | 0.07 | 0.07 |
| 14 | 20 - Streetlighting | 0.19 | 7.16 | 7.35 | 7.13 | 7.13 | 7.13 | 7.13 | 0.19 | 0.19 | 0.19 | 0.19 | 0.19 |
| 15 | Total | 1,624 | 1,406 | 1,493 | 1,563 | 1,549 | 1,472 | 1,482 | 1,675 | 2,093 | 2,292 | 2,130 | 2,042 |
| | **Coincident Demand at Subtransmission in MW** | | | | | | | | | | | | |
| 16 | 1 - Residential | 615.10 | 575.70 | 723.32 | 713.05 | 620.65 | 542.80 | 508.74 | 609.34 | 989.75 | 1043.38 | 959.35 | 830.09 |
| 17 | 2 - Small Power | 161.90 | 116.59 | 127.18 | 129.89 | 128.34 | 127.01 | 133.79 | 157.67 | 205.63 | 242.47 | 188.90 | 172.97 |
| 18 | 3 - General Power | 319.23 | 239.54 | 253.56 | 257.91 | 245.44 | 255.11 | 273.03 | 319.90 | 386.53 | 418.33 | 350.99 | 337.21 |
| 19 | 4 - Large Power | 143.42 | 117.96 | 121.30 | 120.83 | 119.94 | 124.57 | 136.49 | 142.19 | 159.56 | 160.31 | 143.98 | 146.54 |
| 20 | 5 - Large Service >=8,000kW | 0.00 | 0.00 | 0.00 | 0.00 | 0.00 | 0.00 | 0.00 | 0.00 | 0.00 | 0.00 | 0.00 | 0.00 |
| 21 | 15 - Universities 115 kV | 11.56 | 5.37 | 2.40 | 3.84 | 1.41 | 2.21 | 7.31 | 12.96 | 12.67 | 13.86 | 11.89 | 12.70 |
| 22 | 30 - Manufacturing (>30 MW) | 84.54 | 83.80 | 83.57 | 83.19 | 83.50 | 83.73 | 83.82 | 84.32 | 84.57 | 85.00 | 84.33 | 84.50 |
| 23 | 33 - Station Service | 0.00 | 1.57 | 1.47 | 1.18 | 2.04 | 1.48 | 1.77 | 1.42 | 2.09 | 0.00 | 0.00 | 1.65 |
| 24 | 35 - Large Power >=3,000kW | 34.56 | 34.19 | 31.88 | 30.62 | 35.64 | 34.06 | 33.90 | 37.17 | 37.63 | 36.94 | 36.90 | 36.80 |
| 25 | 36 - Special Service - Renewable | 348.31 | 354.86 | 380.31 | 401.43 | 417.82 | 431.76 | 444.86 | 470.95 | 481.47 | 493.93 | 492.68 | 499.69 |
| 26 | 10 - Irrigation | 3.46 | 1.63 | 0.49 | 0.59 | 1.69 | 1.90 | 3.82 | 4.80 | 5.84 | 5.48 | 5.36 | 3.96 |
| 27 | 11 - Water/Sewage Pumping | 34.46 | 13.05 | 27.01 | 6.31 | 9.51 | 5.65 | 9.53 | 2.18 | 5.55 | 25.78 | 7.57 | 6.48 |
| 28 | 6 - Private Lighting | 0.08 | 3.17 | 3.50 | 3.24 | 3.06 | 3.15 | 3.22 | 0.08 | 0.08 | 0.08 | 0.08 | 0.07 |
| 29 | 20 - Streetlighting | 0.21 | 8.43 | 9.56 | 8.61 | 8.12 | 8.42 | 8.60 | 0.22 | 0.22 | 0.21 | 0.21 | 0.20 |
| 30 | Total | 1,757 | 1,556 | 1,766 | 1,761 | 1,677 | 1,622 | 1,649 | 1,843 | 2,372 | 2,526 | 2,282 | 2,133 |

The difference between generation and transmission equals transmission losses; the difference between transmission and subtransmission equals subtransmission losses; and the difference between subtransmission and distribution equals distribution losses and unaccounted for energy (UFE)

**Public Service Company of New Mexico**

**P-1 Total System and Retail Peak Demand Information at Generation and Distribution (Meter)**

Test Period Ending September 30, 2028

This schedule is sponsored by PNM Witness Hayat

| Line No. | Description | Oct-27 | Nov-27 | Dec-27 | Jan-28 | Feb-28 | Mar-28 | Apr-28 | May-28 | Jun-28 | Jul-28 | Aug-28 | Sep-28 |
|---|---|---|---|---|---|---|---|---|---|---|---|---|---|
| | **Coincident Demand at Transmission in MW** | | | | | | | | | | | | |
| 31 | 1 - Residential | 617.12 | 577.59 | 725.70 | 715.39 | 622.69 | 544.59 | 510.41 | 611.35 | 993.01 | 1,046.81 | 962.51 | 832.82 |
| 32 | 2 - Small Power | 162.43 | 116.98 | 127.60 | 130.32 | 128.76 | 127.43 | 134.23 | 158.19 | 206.31 | 243.27 | 189.52 | 173.54 |
| 33 | 3 - General Power | 320.28 | 240.33 | 254.40 | 258.76 | 246.25 | 255.95 | 273.93 | 320.95 | 387.80 | 419.70 | 352.14 | 338.32 |
| 34 | 4 - Large Power | 143.89 | 118.34 | 121.70 | 121.22 | 120.34 | 124.98 | 136.94 | 142.66 | 160.08 | 160.83 | 144.45 | 147.02 |
| 35 | 5 - Large Service >=8,000kW | 0.00 | 0.00 | 0.00 | 0.00 | 0.00 | 0.00 | 0.00 | 0.00 | 0.00 | 0.00 | 0.00 | 0.00 |
| 36 | 15 - Universities 115 kV | 11.60 | 5.39 | 2.40 | 3.85 | 1.41 | 2.21 | 7.33 | 13.01 | 12.71 | 13.91 | 11.93 | 12.74 |
| 37 | 30 - Manufacturing (>30 MW) | 84.82 | 84.08 | 83.85 | 83.46 | 83.78 | 84.01 | 84.10 | 84.60 | 84.84 | 85.28 | 84.61 | 84.78 |
| 38 | 33 - Station Service | 0.00 | 1.57 | 1.47 | 1.18 | 2.05 | 1.49 | 1.77 | 1.43 | 2.10 | 0.00 | 0.00 | 1.65 |
| 39 | 35 - Large Power >=3,000kW | 34.67 | 34.31 | 31.98 | 30.72 | 35.76 | 34.18 | 34.01 | 37.29 | 37.76 | 37.06 | 37.02 | 36.92 |
| 40 | 36 - Special Service - Renewable | 349.46 | 356.03 | 381.56 | 402.75 | 419.20 | 433.19 | 446.32 | 472.50 | 483.06 | 495.55 | 494.30 | 501.33 |
| 41 | 10 - Irrigation | 3.47 | 1.64 | 0.49 | 0.59 | 1.69 | 1.91 | 3.83 | 4.82 | 5.86 | 5.49 | 5.38 | 3.97 |
| 42 | 11 - Water/Sewage Pumping | 34.57 | 13.10 | 27.10 | 6.33 | 9.54 | 5.67 | 9.56 | 2.19 | 5.57 | 25.86 | 7.60 | 6.50 |
| 43 | 6 - Private Lighting | 0.08 | 3.18 | 3.51 | 3.25 | 3.07 | 3.16 | 3.23 | 0.08 | 0.08 | 0.08 | 0.08 | 0.07 |
| 44 | 20 - Streetlighting | 0.21 | 8.46 | 9.60 | 8.63 | 8.15 | 8.44 | 8.62 | 0.22 | 0.23 | 0.22 | 0.21 | 0.20 |
| 45 | Total | 1,762.61 | 1,560.99 | 1,771.37 | 1,766.46 | 1,682.68 | 1,627.20 | 1,654.29 | 1,849.28 | 2,379.40 | 2,534.08 | 2,289.75 | 2,139.88 |
| | **Coincident Demand at Generation in MW** | | | | | | | | | | | | |
| 46 | 1 - Residential | 634.28 | 593.65 | 745.87 | 735.28 | 640.00 | 559.73 | 524.60 | 628.34 | 1020.61 | 1075.91 | 989.27 | 855.97 |
| 47 | 2 - Small Power | 166.95 | 120.23 | 131.15 | 133.94 | 132.34 | 130.97 | 137.96 | 162.58 | 212.04 | 250.04 | 194.79 | 178.37 |
| 48 | 3 - General Power | 329.18 | 247.01 | 261.47 | 265.95 | 253.09 | 263.06 | 281.54 | 329.87 | 398.58 | 431.37 | 361.93 | 347.73 |
| 49 | 4 - Large Power | 147.89 | 121.63 | 125.08 | 124.59 | 123.68 | 128.46 | 140.75 | 146.63 | 164.53 | 165.31 | 148.47 | 151.11 |
| 50 | Large Service | 0.00 | 0.00 | 0.00 | 0.00 | 0.00 | 0.00 | 0.00 | 0.00 | 0.00 | 0.00 | 0.00 | 0.00 |
| 51 | 15 - Universities 115 kV | 11.92 | 5.54 | 2.47 | 3.96 | 1.45 | 2.27 | 7.54 | 13.37 | 13.06 | 14.30 | 12.26 | 13.09 |
| 52 | 30 - Manufacturing (>30 MW) | 87.18 | 86.42 | 86.18 | 85.78 | 86.10 | 86.35 | 86.43 | 86.95 | 87.20 | 87.65 | 86.96 | 87.14 |
| 53 | 33 - Station Service | 0.00 | 1.62 | 1.51 | 1.21 | 2.11 | 1.53 | 1.82 | 1.47 | 2.15 | 0.00 | 0.00 | 1.70 |
| 54 | 35 - Large Power >=3,000kW | 35.64 | 35.26 | 32.87 | 31.57 | 36.75 | 35.13 | 34.95 | 38.33 | 38.81 | 38.09 | 38.05 | 37.94 |
| 55 | 36 - Special Service - Renewable | 359.17 | 365.93 | 392.17 | 413.94 | 430.85 | 445.23 | 458.73 | 485.64 | 496.49 | 509.33 | 508.04 | 515.27 |
| 56 | 10 - Irrigation | 3.57 | 1.68 | 0.51 | 0.61 | 1.74 | 1.96 | 3.94 | 4.95 | 6.02 | 5.65 | 5.53 | 4.08 |
| 57 | 11 - Water/Sewage Pumping | 35.54 | 13.46 | 27.86 | 6.51 | 9.80 | 5.83 | 9.83 | 2.25 | 5.72 | 26.58 | 7.81 | 6.69 |
| 58 | 6 - Private Lighting | 0.08 | 3.27 | 3.61 | 3.34 | 3.15 | 3.25 | 3.32 | 0.08 | 0.09 | 0.08 | 0.08 | 0.08 |
| 59 | 20 - Streetlighting | 0.22 | 8.69 | 9.86 | 8.87 | 8.37 | 8.68 | 8.86 | 0.23 | 0.23 | 0.22 | 0.21 | 0.21 |
| 64 | Total | 1,811.61 | 1,604.38 | 1,820.61 | 1,815.57 | 1,729.46 | 1,672.43 | 1,700.28 | 1,900.69 | 2,445.54 | 2,604.53 | 2,353.41 | 2,199.37 |

The difference between generation and transmission equals transmission losses; the difference between transmission and subtransmission equals subtransmission losses; and the difference between subtransmission and distribution equals distribution losses and unaccounted for energy (UFE). Losses are computed using Demand loss factors.

**Public Service Company of New Mexico**

**P-1 Total System and Retail Peak Demand Information at Generation and Distribution (Meter)**

Test Period Ending September 30, 2028

This schedule is sponsored by PNM Witness Hayat

| Line No. | Description | Oct-27 | Nov-27 | Dec-27 | Jan-28 | Feb-28 | Mar-28 | Apr-28 | May-28 | Jun-28 | Jul-28 | Aug-28 | Sep-28 |
|---|---|---|---|---|---|---|---|---|---|---|---|---|---|
| | **Non-Coincident Demand at Distribution in MW** | | | | | | | | | | | | |
| 1 | 1 - Residential | 545.72 | 490.45 | 589.18 | 601.39 | 559.04 | 474.81 | 425.68 | 526.28 | 823.78 | 907.74 | 892.88 | 776.15 |
| 2 | 2 - Small Power | 176.12 | 143.07 | 144.81 | 152.78 | 155.41 | 149.11 | 157.93 | 180.98 | 221.76 | 243.03 | 225.45 | 213.78 |
| 3 | 3 - General Power | 313.12 | 260.40 | 265.30 | 272.82 | 280.40 | 264.14 | 288.27 | 317.74 | 363.53 | 391.69 | 379.70 | 367.68 |
| 4 | 4 - Large Power | 140.40 | 133.44 | 130.04 | 130.26 | 130.27 | 127.14 | 140.18 | 139.66 | 155.57 | 155.27 | 151.99 | 149.98 |
| 5 | Large Service | 0.00 | 0.00 | 0.00 | 0.00 | 0.00 | 0.00 | 0.00 | 0.00 | 0.00 | 0.00 | 0.00 | 0.00 |
| 6 | 15 - Universities 115 kV | 13.25 | 10.25 | 8.53 | 11.45 | 14.96 | 15.48 | 13.43 | 15.99 | 15.04 | 14.99 | 16.58 | 15.56 |
| 7 | 30 - Manufacturing (>30 MW) | 84.42 | 83.90 | 83.62 | 83.79 | 83.74 | 83.96 | 84.24 | 84.62 | 84.88 | 84.90 | 84.77 | 85.04 |
| 8 | 33 - Station Service | 2.59 | 2.80 | 2.46 | 3.76 | 3.86 | 2.57 | 2.22 | 2.59 | 3.66 | 4.48 | 4.07 | 3.01 |
| 9 | 35 - Large Power >=3,000kW | 35.12 | 34.89 | 35.39 | 33.54 | 37.23 | 35.16 | 35.19 | 38.33 | 38.58 | 37.96 | 38.49 | 39.50 |
| 10 | 36 - Special Service - Renewable | 357.23 | 365.18 | 391.57 | 417.42 | 428.57 | 442.42 | 456.90 | 482.18 | 493.33 | 505.08 | 504.58 | 511.76 |
| 11 | 10 - Irrigation | 3.47 | 1.90 | 1.28 | 1.55 | 2.07 | 3.31 | 4.53 | 5.23 | 5.27 | 5.24 | 5.29 | 4.81 |
| 12 | 11 - Water/Sewage Pumping | 41.95 | 34.94 | 28.14 | 24.63 | 23.50 | 24.56 | 26.10 | 29.28 | 34.61 | 36.40 | 36.70 | 38.80 |
| 13 | 6 - Private Lighting | 2.70 | 2.69 | 2.69 | 2.68 | 2.68 | 2.67 | 2.67 | 2.67 | 2.65 | 2.65 | 2.65 | 2.65 |
| 14 | 20 - Streetlighting | 7.16 | 7.16 | 7.35 | 7.13 | 7.13 | 7.13 | 7.13 | 7.13 | 7.13 | 7.13 | 7.13 | 7.13 |
| 15 | Total | 1,723.25 | 1,571.07 | 1,690.34 | 1,743.21 | 1,728.86 | 1,632.48 | 1,644.46 | 1,832.68 | 2,249.79 | 2,396.56 | 2,350.29 | 2,215.86 |
| | **Non-Coincident Demand at Generation in MW** | | | | | | | | | | | | |
| 16 | 1 - Residential | 634.28 | 593.65 | 750.61 | 735.28 | 649.18 | 576.37 | 528.13 | 636.28 | 1020.61 | 1113.27 | 1001.97 | 855.97 |
| 17 | 2 - Small Power | 181.39 | 149.77 | 162.44 | 160.62 | 153.58 | 141.18 | 153.72 | 184.21 | 245.86 | 270.38 | 236.06 | 206.72 |
| 18 | 3 - General Power | 330.47 | 284.76 | 319.50 | 312.50 | 301.48 | 277.27 | 305.69 | 330.19 | 405.27 | 435.79 | 394.47 | 358.69 |
| 19 | 4 - Large Power | 147.89 | 134.82 | 140.23 | 140.53 | 134.95 | 134.69 | 148.64 | 147.98 | 164.71 | 165.91 | 158.25 | 153.64 |
| 20 | Large Service | 0.00 | 0.00 | 0.00 | 0.00 | 0.00 | 0.00 | 0.00 | 0.00 | 0.00 | 0.00 | 0.00 | 0.00 |
| 21 | 15 - Universities 115 kV | 13.60 | 10.52 | 8.77 | 11.77 | 15.34 | 15.91 | 13.76 | 16.38 | 15.41 | 15.37 | 17.00 | 15.95 |
| 22 | 30 - Manufacturing (>30 MW) | 87.55 | 87.01 | 86.72 | 86.89 | 86.84 | 87.07 | 87.36 | 87.76 | 88.02 | 88.04 | 87.91 | 88.19 |
| 23 | 33 - Station Service | 2.67 | 2.87 | 2.52 | 3.87 | 3.97 | 2.64 | 2.28 | 2.66 | 3.76 | 4.60 | 4.19 | 3.09 |
| 24 | 35 - Large Power >=3,000kW | 36.42 | 36.18 | 36.70 | 34.78 | 38.61 | 36.47 | 36.49 | 39.75 | 40.01 | 39.37 | 39.92 | 40.96 |
| 25 | 36 - Special Service - Renewable | 367.16 | 375.33 | 402.45 | 429.03 | 440.48 | 454.72 | 469.60 | 495.58 | 507.04 | 519.12 | 518.61 | 525.99 |
| 26 | 10 - Irrigation | 4.08 | 2.28 | 1.66 | 1.87 | 2.45 | 4.10 | 5.64 | 6.46 | 6.60 | 6.23 | 6.01 | 5.27 |
| 27 | 11 - Water/Sewage Pumping | 42.40 | 40.74 | 29.22 | 28.74 | 26.96 | 27.40 | 28.95 | 31.89 | 38.63 | 39.98 | 38.98 | 39.37 |
| 28 | 6 - Private Lighting | 3.31 | 3.52 | 3.90 | 3.74 | 3.46 | 3.38 | 3.34 | 3.32 | 3.37 | 3.25 | 3.19 | 2.98 |
| 29 | 20 - Streetlighting | 8.78 | 9.37 | 10.65 | 9.94 | 9.19 | 9.01 | 8.93 | 8.88 | 9.05 | 8.73 | 8.59 | 8.01 |
| 30 | Total | 1,859.99 | 1,730.82 | 1,955.35 | 1,959.55 | 1,866.48 | 1,770.20 | 1,792.54 | 1,991.35 | 2,548.35 | 2,710.02 | 2,515.15 | 2,304.83 |

The difference between between Non-Coincident demand at generation MW and distribution MW represents losses and unaccounted for energy (UFE)

Losses are computed using Energy loss factors.

**Public Service Company of New Mexico**

**P-1 Total System and Retail Peak Demand Information at Generation and Distribution (Meter)**

Four Years Prior to Test Period, Five Years Beyond Base Period, and Test Period Ending 9/30/2028

| | Reference | Actuals | Actuals | Actuals | Actuals | Forecast | Forecast | Forecast | Forecast | Forecast | Forecast | |
|---|---|---|---|---|---|---|---|---|---|---|---|---|
| **Line No.** | **Description** | **Year Ended 12/31/2023** | **Year Ended 12/31/2024** | **Year Ended 12/31/2025** | **Year Ended 12/31/2026** | **Year Ended 12/31/2027** | **Year Ended 12/31/2028** | **Year Ended 12/31/2029** | **Year Ended 12/31/2030** | **Year Ended 12/31/2031** | **Year Ended 12/31/2032** | **Year Ended 12/31/2033** |
| | **Total System Peak Coincident Load in MW** | | | | | | | | | | | |
| 1 | January | 1458 | 1495 | 1533 | 1461 | 1580 | 1816 | 2102 | 2245 | 2290 | 2292 | |
| 2 | February | 1426 | 1347 | 1355 | 1366 | 1531 | 1729 | 1980 | 2129 | 2169 | 2207 | |
| 3 | March | 1289 | 1268 | 1336 | 1365 | 1477 | 1672 | 2003 | 2073 | 2135 | 2107 | |
| 4 | April | 1276 | 1277 | 1364 | 1380 | 1522 | 1700 | 1975 | 2096 | 2127 | 2151 | |
| 5 | May | 1447 | 1596 | 1626 | 1595 | 1693 | 1901 | 2127 | 2176 | 2225 | 2281 | |
| 6 | June | 1815 | 1989 | 2031 | 2057 | 2233 | 2446 | 2681 | 2730 | 2723 | 2832 | |
| 7 | July | 2131 | 2023 | 2045 | 2186 | 2406 | 2605 | 2820 | 2895 | 2947 | 2970 | |
| 8 | August | 2005 | 2073 | 2064 | 2091 | 2277 | 2353 | 2579 | 2733 | 2782 | 2800 | |
| 9 | September | 1843 | 1741 | 1762 | 1830 | 1989 | 2199 | 2444 | 2517 | 2524 | 2504 | |
| 10 | October | 1373 | 1565 | 1455 | 1660 | 1812 | 1940 | 2265 | 2321 | 2345 | 2310 | |
| 11 | November | 1303 | 1399 | 1339 | 1450 | 1604 | 1867 | 2090 | 2147 | 2186 | 2159 | |
| 12 | December | 1348 | 1459 | 1454 | 1606 | 1821 | 2062 | 2245 | 2311 | 2326 | 2358 | |
| | **Coincident Demand at Subtransmission in MW** | | | | | | | | | | | |
| 17 | January | 1414 | 1450 | 1487 | 1417 | 1532 | 1761 | 2038 | 2177 | 2221 | 2223 | |
| 18 | February | 1383 | 1306 | 1314 | 1324 | 1485 | 1677 | 1920 | 2065 | 2104 | 2140 | |
| 19 | March | 1250 | 1230 | 1296 | 1323 | 1432 | 1622 | 1942 | 2010 | 2070 | 2043 | |
| 20 | April | 1237 | 1238 | 1323 | 1339 | 1476 | 1649 | 1915 | 2033 | 2063 | 2086 | |
| 21 | May | 1403 | 1548 | 1577 | 1547 | 1642 | 1843 | 2063 | 2110 | 2158 | 2212 | |
| 22 | June | 1760 | 1929 | 1970 | 1994 | 2166 | 2372 | 2600 | 2648 | 2640 | 2746 | |
| 23 | July | 2067 | 1962 | 1983 | 2120 | 2334 | 2526 | 2735 | 2807 | 2858 | 2881 | |
| 24 | August | 1945 | 2010 | 2002 | 2027 | 2208 | 2282 | 2501 | 2650 | 2697 | 2716 | |
| 25 | September | 1787 | 1688 | 1709 | 1775 | 1929 | 2133 | 2370 | 2441 | 2447 | 2428 | |
| 26 | October | 1331 | 1518 | 1411 | 1610 | 1757 | 1881 | 2196 | 2251 | 2274 | 2240 | |
| 27 | November | 1263 | 1357 | 1299 | 1406 | 1556 | 1810 | 2027 | 2082 | 2120 | 2094 | |
| 28 | December | 1308 | 1415 | 1410 | 1557 | 1766 | 1999 | 2177 | 2242 | 2255 | 2287 | |

This schedule is sponsored by PNM Witness Hayat

# PNM Schedule P-2

Plant in service

| | A | B | C | D | E | F |
|---|---|---|---|---|---|---|
| 1 | **Public Service Company of New Mexico** | | | | | |
| 2 | **Schedule P-2** | | | | | |
| 3 | **Plant in Service** | | | | | |
| 4 | **Four Years Prior To Test Period,** | | | | | |
| 5 | **Five Years Beyond Base Period and** | | | | | |
| 6 | **Test Period Ending 9/30/2028** | | | | | |
| 7 | **This schedule is sponsored by** | | | | | |
| 8 | **PNM Witness Gutierrez** | | | | | |
| 9 | | | | | | |
| 10 | **Description** | **Year Ended 12/31/2023** | **Year Ended 12/31/2024** | **Year Ended 12/31/2025** | **Unadjusted Base Period Ended 6/30/2026** | **Year Ended 12/31/2026** |
| 11 | | | | | | |
| 12 | Total System | | | | | |
| 13 | Production | 2,077,102,431 | 2,132,950,801 | 2,195,751,015 | 2,208,289,710 | 2,139,481,189 |
| 14 | Energy Storage | - | - | 33,067,660 | 156,395,217 | 166,454,919 |
| 15 | Transmission | 1,811,833,443 | 2,112,147,444 | 2,290,729,329 | 2,296,197,155 | 2,357,273,415 |
| 16 | Distribution | 1,981,936,278 | 2,238,529,679 | 2,534,513,733 | 2,621,521,617 | 2,802,897,722 |
| 17 | General & Intangible | 257,899,468 | 280,405,618 | 170,644,831 | 178,033,247 | 177,631,777 |
| 18 | Electric Plant Acq. Adj. | 19,905,596 | 18,197,769 | 16,779,747 | 16,363,721 | 15,947,694 |
| 19 | **Total** | **6,148,677,214** | **6,782,231,311** | **7,241,486,315** | **7,476,800,667** | **7,659,686,715** |
| 20 | | | | | | |
| 21 | | | | | | |
| 22 | PNM Base Rate | | | | | |
| 23 | Production | 1,825,618,149 | 1,884,274,406 | 1,939,752,871 | 1,950,829,705 | 1,890,043,429 |
| 24 | Energy Storage | - | - | 33,067,660 | 156,395,217 | 166,454,919 |
| 25 | Transmission | 691,354,561 | 857,916,400 | 930,453,158 | 932,674,090 | 957,482,171 |
| 26 | Distribution | 1,971,826,051 | 2,215,839,117 | 2,508,822,968 | 2,594,948,908 | 2,774,486,518 |
| 27 | General & Intangible | 237,116,554 | 259,945,286 | 158,193,405 | 165,042,711 | 164,670,535 |
| 28 | Electric Plant Acq. Adj. | 19,285,419 | 18,197,769 | 16,779,747 | 16,363,721 | 15,947,694 |
| 29 | **Total** | **4,745,200,734** | **5,236,172,978** | **5,587,069,808** | **5,816,254,352** | **5,969,085,266** |

| | A | G | H | I | J | K |
|---|---|---|---|---|---|---|
| 1 | **Public Service Company of New Mexico** | | | | | |
| 2 | **Schedule P-2** | | | | | |
| 3 | **Plant in Service** | | | | | |
| 4 | **Four Years Prior To Test Period,** | | | | | |
| 5 | **Five Years Beyond Base Period and** | | | | | |
| 6 | **Test Period Ending 9/30/2028** | | | | | |
| 7 | **This schedule is sponsored by** | | | | | |
| 8 | **PNM Witness Gutierrez** | | | | | |
| 9 | | | | | | |
| 10 | **Description** | **Year Ended 12/31/2027** | **Unadjusted Test Period Ended 9/30/2028** | **Year Ended 12/31/2028** | **Year Ended 12/31/2029** | **Year Ended 12/31/2030** |
| 11 | | | | | | |
| 12 | Total System | | | | | |
| 13 | Production | 2,350,147,884 | 2,373,534,770 | 2,426,674,817 | 2,476,620,314 | 2,526,565,810 |
| 14 | Energy Storage | 333,783,222 | 333,783,222 | 333,783,222 | 333,783,222 | 333,783,222 |
| 15 | Transmission | 2,495,675,975 | 473,467,976 | 828,204,587 | 951,711,011 | 1,075,217,435 |
| 16 | Distribution | 3,112,088,803 | 3,323,701,034 | 3,676,018,163 | 4,055,515,210 | 4,435,012,256 |
| 17 | General & Intangible | 199,626,315 | 207,515,715 | 249,333,577 | 282,639,563 | 315,945,549 |
| 18 | Electric Plant Acq. Adj. | 15,115,641 | 14,491,601 | 14,273,054 | 14,054,507 | 13,835,960 |
| 19 | **Total** | **8,506,437,840** | **6,726,494,318** | **7,528,287,421** | **8,114,323,826** | **8,700,360,232** |
| 20 | | | | | | |
| 21 | | | | | | |
| 22 | PNM Base Rate | | | | | |
| 23 | Production | 2,076,148,923 | 1,952,658,839 | 1,996,376,077 | 2,037,465,222 | 2,078,554,367 |
| 24 | Energy Storage | 333,783,222 | 424,175,856 | 424,175,856 | 424,175,856 | 424,175,856 |
| 25 | Transmission | 1,013,698,809 | 1,065,995,339 | 1,864,671,478 | 2,142,741,546 | 2,420,811,614 |
| 26 | Distribution | 3,080,543,524 | 3,368,254,014 | 3,725,293,823 | 4,109,877,887 | 4,494,461,951 |
| 27 | General & Intangible | 185,060,199 | 191,950,720 | 230,631,977 | 261,439,803 | 292,247,629 |
| 28 | Electric Plant Acq. Adj. | 15,115,641 | 14,491,601 | 14,273,054 | 14,054,507 | 13,835,960 |
| 29 | **Total** | **6,704,350,318** | **7,017,526,369** | **8,255,422,264** | **8,989,754,820** | **9,724,087,376** |

| | A | L | M |
|---|---|---|---|
| 1 | **Public Service Company of New Mexico** | | |
| 2 | **Schedule P-2** | | |
| 3 | **Plant in Service** | | |
| 4 | **Four Years Prior To Test Period,** | | |
| 5 | **Five Years Beyond Base Period and** | | |
| 6 | **Test Period Ending 9/30/2028** | | |
| 7 | **This schedule is sponsored by** | | |
| 8 | **PNM Witness Gutierrez** | | |
| 9 | | | |
| 10 | **Description** | **Year Ended 12/31/2031** | **Reference** |
| 11 | | | |
| 12 | Total System | | |
| 13 | Production | 2,658,061,247 | |
| 14 | Energy Storage | 328,435,082 | |
| 15 | Transmission | 1,125,454,098 | |
| 16 | Distribution | 4,794,048,173 | |
| 17 | General & Intangible | 347,789,452 | |
| 18 | Electric Plant Acq. Adj. | 13,617,412 | |
| 19 | **Total** | **9,267,405,464** | |
| 20 | | | |
| 21 | | | |
| 22 | PNM Base Rate | | |
| 23 | Production | 2,186,732,992 | |
| 24 | Energy Storage | 417,379,373 | |
| 25 | Transmission | 2,533,917,572 | |
| 26 | Distribution | 4,858,310,611 | |
| 27 | General & Intangible | 321,703,036 | |
| 28 | Electric Plant Acq. Adj. | 13,617,412 | |
| 29 | **Total** | **10,331,660,997** | |

| | A | B | C | D | E | F |
|---|---|---|---|---|---|---|
| 1 | **Public Service Company of New Mexico** | | | | | |
| 2 | **Schedule P-2** | | | | | |
| 3 | **Plant in Service** | | | | | |
| 4 | **Test Period Ending 9/30/2028** | | | | | |
| 5 | **This schedule is sponsored by** | | | | | |
| 6 | **PNM Witness Gutierrez** | | | | | |
| 7 | | | | | | |
| 8 | **Description** | **Oct-27** | **Nov-27** | **Dec-27** | **Jan-28** | **Feb-28** |
| 9 | | | | | | |
| 10 | Total System | | | | | |
| 11 | Production | 2,319,290,127 | 2,323,190,123 | 2,350,147,884 | 2,351,440,980 | 2,351,017,736 |
| 12 | Energy Storage | 331,644,216 | 331,644,216 | 333,783,222 | 333,783,222 | 333,783,222 |
| 13 | Transmission | 2,458,545,475 | 2,458,687,836 | 2,495,675,975 | 2,501,370,162 | 2,503,339,683 |
| 14 | Distribution | 3,018,743,883 | 3,028,990,103 | 3,112,088,803 | 3,131,610,199 | 3,143,242,184 |
| 15 | General & Intangible | 180,162,438 | 195,379,720 | 199,626,315 | 199,567,125 | 202,887,366 |
| 16 | Electric Plant Acq. Adj. | 15,254,317 | 15,184,979 | 15,115,641 | 15,046,303 | 14,976,966 |
| 17 | **Total** | **8,323,640,455** | **8,353,076,977** | **8,506,437,840** | **8,532,817,992** | **8,549,247,157** |
| 18 | | | | | | |
| 19 | PNM Base Rate | | | | | |
| 20 | Production | 1,908,032,874 | 1,911,241,321 | 1,933,418,923 | 1,934,482,727 | 1,934,134,533 |
| 21 | Energy Storage | 331,644,215 | 331,644,215 | 333,783,222 | 333,783,222 | 333,783,222 |
| 22 | Transmission | 998,617,065 | 998,674,890 | 1,013,698,809 | 1,016,011,685 | 1,016,811,669 |
| 23 | Distribution | 2,988,144,783 | 2,998,287,143 | 3,080,543,524 | 3,099,867,044 | 3,111,381,123 |
| 24 | General & Intangible | 167,016,541 | 181,123,466 | 185,060,199 | 185,005,328 | 188,083,302 |
| 25 | Electric Plant Acq. Adj. | 15,254,316 | 15,184,979 | 15,115,641 | 15,046,303 | 14,976,965 |
| 26 | **Total** | **6,408,709,794** | **6,436,156,014** | **6,561,620,318** | **6,584,196,310** | **6,599,170,814** |

| | A | G | H | I | J | K |
|---|---|---|---|---|---|---|
| 1 | **Public Service Company of New Mexico** | | | | | |
| 2 | **Schedule P-2** | | | | | |
| 3 | **Plant in Service** | | | | | |
| 4 | **Test Period Ending 9/30/2028** | | | | | |
| 5 | **This schedule is sponsored by** | | | | | |
| 6 | **PNM Witness Gutierrez** | | | | | |
| 7 | | | | | | |
| 8 | **Description** | **Mar-28** | **Apr-28** | **May-28** | **Jun-28** | **Jul-28** |
| 9 | | | | | | |
| 10 | Total System | | | | | |
| 11 | Production | 2,355,161,036 | 2,366,625,655 | 2,371,063,150 | 2,371,377,766 | 2,372,248,832 |
| 12 | Energy Storage | 333,783,222 | 333,783,222 | 333,783,222 | 333,783,222 | 333,783,222 |
| 13 | Transmission | 2,504,374,708 | 2,513,088,511 | 2,519,649,943 | 2,624,457,922 | 2,624,664,298 |
| 14 | Distribution | 3,161,271,768 | 3,194,101,350 | 3,208,725,618 | 3,223,833,040 | 3,246,172,088 |
| 15 | General & Intangible | 203,130,194 | 203,272,839 | 203,226,293 | 202,974,748 | 203,103,954 |
| 16 | Electric Plant Acq. Adj. | 14,907,628 | 14,838,290 | 14,768,952 | 14,699,614 | 14,630,277 |
| 17 | **Total** | **8,572,628,557** | **8,625,709,868** | **8,651,217,178** | **8,771,126,313** | **8,794,602,671** |
| 18 | | | | | | |
| 19 | PNM Base Rate | | | | | |
| 20 | Production | 1,937,543,142 | 1,946,974,851 | 1,950,625,488 | 1,950,884,316 | 1,951,600,924 |
| 21 | Energy Storage | 333,783,222 | 333,783,222 | 333,783,222 | 333,783,222 | 333,783,222 |
| 22 | Transmission | 1,017,232,078 | 1,020,771,468 | 1,023,436,604 | 1,066,007,725 | 1,066,091,551 |
| 23 | Distribution | 3,129,227,952 | 3,161,724,762 | 3,176,200,793 | 3,191,155,081 | 3,213,267,692 |
| 24 | General & Intangible | 188,308,412 | 188,440,648 | 188,397,498 | 188,164,308 | 188,284,086 |
| 25 | Electric Plant Acq. Adj. | 14,907,627 | 14,838,290 | 14,768,952 | 14,699,614 | 14,630,276 |
| 26 | **Total** | **6,621,002,433** | **6,666,533,241** | **6,687,212,556** | **6,744,694,265** | **6,767,657,752** |

| | A | L | M | N |
|---|---|---|---|---|
| 1 | **Public Service Company of New Mexico** | | | |
| 2 | **Schedule P-2** | | | |
| 3 | **Plant in Service** | | | |
| 4 | **Test Period Ending 9/30/2028** | | | |
| 5 | **This schedule is sponsored by** | | | |
| 6 | **PNM Witness Gutierrez** | | | |
| 7 | | | | |
| 8 | **Description** | **Aug-28** | **Sep-28** | **Reference** |
| 9 | | | | |
| 10 | Total System | | | |
| 11 | Production | 2,373,870,812 | 2,373,534,770 | |
| 12 | Energy Storage | 333,783,222 | 333,783,222 | |
| 13 | Transmission | 2,633,351,710 | 473,467,976 | |
| 14 | Distribution | 3,275,646,779 | 3,323,701,034 | |
| 15 | General & Intangible | 204,858,639 | 207,515,715 | |
| 16 | Electric Plant Acq. Adj. | 14,560,939 | 14,491,601 | |
| 17 | **Total** | **8,836,072,102** | **6,726,494,318** | |
| 18 | | | | |
| 19 | PNM Base Rate | | | |
| 20 | Production | 1,952,935,294 | 1,952,658,839 | |
| 21 | Energy Storage | 333,783,222 | 333,783,222 | |
| 22 | Transmission | 1,069,620,222 | 192,314,198 | |
| 23 | Distribution | 3,242,443,616 | 3,290,010,776 | |
| 24 | General & Intangible | 189,910,737 | 192,373,934 | |
| 25 | Electric Plant Acq. Adj. | 14,560,939 | 14,491,601 | |
| 26 | **Total** | **6,803,254,031** | **5,975,632,570** | |

| | A | B |
|---|---|---|
| 1 | **Public Service Company of New Mexico** | |
| 2 | **Schedule P-2** | |
| 3 | **Plant in Service (Notes)** | |
| 4 | **This schedule is sponsored by PNM Witness Gutierrez** | |
| 5 | | |
| 6 | **Schedule P-2** | |
| 7 | **Plant in Service** | |
| 8 | **Four Years Prior To Test Period, Five Years Beyond Base Period and Test Period Ending 9/30/2028** | |
| 9 | PNM calculated PNM Base Rate Share at June 30, 2026 (Base Period) and September 30, 2028(Test Period) using the | |
| 10 | Allocators found in PNM Exhibit RNG-3. | |
| 11 | PNM allocated the linkage data and information beyond the Test Period, based on the relationship of PNM Base Rate to | |
| 12 | total system in the Test Period. | |
| 13 | PNM allocated the historical data based on the relationship of PNM Base Rate to total system in the Base Period. | |
| 14 | PNM has excluded balances associated with Grid Modernization from PNM Base Rate as they are pending approval in | |
| 15 | NMPRC Docket No. 22-00058-UT, and a proposed to be recovered under a separate rider mechanism. | |
| 16 | PNM has excluded balances associated with Renewables from PNM Base Rate as they are collected using a Rider | |
| 17 | Base period data is historical information from the Company's Book Balance Amounts | |
| 18 | | |
| 19 | **Schedule P-2** | |
| 20 | **Plant in Service** | |
| 21 | **Test Period Ending 9/30/2028** | |
| 22 | PNM calculated PNM Base Rate Share September 30, 2028 (Test Period) using the Allocators found in PNM Exhibit RNG-3. | |

# PNM Schedule P-3

Property retirements and property investments information

| | A | B | C | D | E | F |
|---|---|---|---|---|---|---|
| 1 | **Public Service Company of New Mexico** | | | | | |
| 2 | **Schedule P-3** | | | | | |
| 3 | **Property Retirements and Property** | | | | | |
| 4 | **Investment Information - Retirements** | | | | | |
| 5 | **Four Years Prior To Test Period,** | | | | | |
| 6 | **Five Years Beyond Base Period** | | | | | |
| 7 | **and Test Period Ending 9/30/2028** | | | | | |
| 8 | **This schedule is sponsored by** | | | | | |
| 9 | **PNM Witness Gutierrez** | | | | | |
| 10 | | | | | | |
| 11 | **Description** | **Year Ended 12/31/2023** | **Year Ended 12/31/2024** | **Year Ended 12/31/2025** | **Unadjusted Base Period Ended 6/30/2026** | **Year Ended 12/31/2026** |
| 12 | | | | | | |
| 13 | Total System | | | | | |
| 14 | Production | (126,807,982) | (23,066,436) | (16,574,064) | (14,237,370) | (11,200,038) |
| 15 | Energy Storage | - | - | - | - | - |
| 16 | Transmission | (3,672,472) | (4,063,192) | (22,954,044) | (15,765,002) | (8,693,358) |
| 17 | Distribution | (9,413,150) | (10,799,776) | (16,332,370) | (13,214,544) | (11,344,405) |
| 18 | General & Intangible | (6,783,535) | (28,632,069) | (7,520,944) | (2,621,396) | (3,199,264) |
| 19 | Electric Plant Acq. Adj. | (1,783,131) | (1,418,022) | (1,418,021) | (1,125,037) | (832,053) |
| 20 | **Total** | **(148,460,270)** | **(67,979,495)** | **(64,799,443)** | **(46,963,349)** | **(35,269,118)** |
| 21 | | | | | | |
| 22 | PNM Base Rate | | | | | |
| 23 | Production | (126,807,982) | (23,066,435) | (16,574,063) | (14,237,370) | (11,200,038) |
| 24 | Energy Storage | - | - | - | - | - |
| 25 | Transmission | (1,747,479) | (1,439,432) | (8,131,729) | (5,584,930) | (3,079,720) |
| 26 | Distribution | (9,413,150) | (10,799,776) | (16,332,370) | (13,214,544) | (11,344,405) |
| 27 | General & Intangible | (6,245,526) | (26,542,875) | (6,972,164) | (2,430,121) | (2,965,823) |
| 28 | Electric Plant Acq. Adj. | (1,473,043) | (1,418,022) | (1,418,021) | (1,125,037) | (832,053) |
| 29 | **Total** | **(145,687,180)** | **(63,266,540)** | **(49,428,348)** | **(36,592,002)** | **(29,422,040)** |

| | A | G | H | I | J | K |
|---|---|---|---|---|---|---|
| 1 | **Public Service Company of New Mexico** | | | | | |
| 2 | **Schedule P-3** | | | | | |
| 3 | **Property Retirements and Property** | | | | | |
| 4 | **Investment Information - Retirements** | | | | | |
| 5 | **Four Years Prior To Test Period,** | | | | | |
| 6 | **Five Years Beyond Base Period** | | | | | |
| 7 | **and Test Period Ending 9/30/2028** | | | | | |
| 8 | **This schedule is sponsored by** | | | | | |
| 9 | **PNM Witness Gutierrez** | | | | | |
| 10 | | | | | | |
| 11 | **Description** | **Year Ended 12/31/2027** | **Unadjusted Test Period Ended 9/30/2028** | **Year Ended 12/31/2028** | **Year Ended 12/31/2029** | **Year Ended 12/31/2030** |
| 12 | | | | | | |
| 13 | Total System | | | | | |
| 14 | Production | (9,176,261) | (9,122,376) | (21,336,859) | (9,122,376) | (9,174,136) |
| 15 | Energy Storage | - | - | - | - | - |
| 16 | Transmission | (5,822,154) | (6,602,997) | (7,313,901) | (7,021,044) | (16,720,889) |
| 17 | Distribution | (13,718,922) | (15,216,615) | (16,657,360) | (12,465,336) | (17,591,423) |
| 18 | General & Intangible | (1,319,110) | (1,220,626) | (1,204,655) | (1,408,562) | (1,849,499) |
| 19 | Electric Plant Acq. Adj. | (355,963) | (218,547) | (218,547) | (218,547) | (218,547) |
| 20 | **Total** | **(30,392,410)** | **(32,381,161)** | **(46,731,323)** | **(30,235,865)** | **(45,554,495)** |
| 21 | | | | | | |
| 22 | PNM Base Rate | | | | | |
| 23 | Production | (9,176,260) | (7,504,793) | (17,553,401) | (7,504,793) | (7,547,375) |
| 24 | Energy Storage | - | - | - | - | - |
| 25 | Transmission | (2,062,564) | (14,866,400) | (16,466,972) | (15,807,616) | (37,646,453) |
| 26 | Distribution | (13,718,922) | (15,420,588) | (16,880,646) | (12,632,429) | (17,827,229) |
| 27 | General & Intangible | (1,222,858) | (1,129,071) | (1,114,298) | (1,302,911) | (1,710,775) |
| 28 | Electric Plant Acq. Adj. | (355,963) | (218,547) | (218,547) | (218,547) | (218,547) |
| 29 | **Total** | **(26,536,568)** | **(39,139,399)** | **(52,233,865)** | **(37,466,297)** | **(64,950,380)** |

| | A | L | M |
|---|---|---|---|
| 1 | **Public Service Company of New Mexico** | | |
| 2 | **Schedule P-3** | | |
| 3 | **Property Retirements and Property** | | |
| 4 | **Investment Information - Retirements** | | |
| 5 | **Four Years Prior To Test Period,** | | |
| 6 | **Five Years Beyond Base Period** | | |
| 7 | **and Test Period Ending 9/30/2028** | | |
| 8 | **This schedule is sponsored by** | | |
| 9 | **PNM Witness Gutierrez** | | |
| 10 | | | |
| 11 | **Description** | **Year Ended 12/31/2031** | **Reference** |
| 12 | | | |
| 13 | Total System | | |
| 14 | Production | (9,330,315) | |
| 15 | Energy Storage | (5,348,140) | |
| 16 | Transmission | (15,024,542) | |
| 17 | Distribution | (14,956,293) | |
| 18 | General & Intangible | (4,915,908) | |
| 19 | Electric Plant Acq. Adj. | (218,547) | |
| 20 | **Total** | **(49,793,745)** | |
| 21 | | | |
| 22 | PNM Base Rate | | |
| 23 | Production | (7,675,861) | |
| 24 | Energy Storage | - | |
| 25 | Transmission | (33,827,192) | |
| 26 | Distribution | (15,156,777) | |
| 27 | General & Intangible | (4,547,183) | |
| 28 | Electric Plant Acq. Adj. | (218,547) | |
| 29 | **Total** | **(61,425,559)** | |

| | A | B | C | D | E | F |
|---|---|---|---|---|---|---|
| 1 | **Public Service Company of New Mexico** | | | | | |
| 2 | **Schedule P-3** | | | | | |
| 3 | **Property Retirements and Property** | | | | | |
| 4 | **Investment Information-Retirements** | | | | | |
| 5 | **Test Period Ending 9/30/2028** | | | | | |
| 6 | **This schedule is sponsored by** | | | | | |
| 7 | **PNM Witness Gutierrez** | | | | | |
| 8 | | | | | | |
| 9 | **Description** | **Oct-27** | **Nov-27** | **Dec-27** | **Jan-28** | **Feb-28** |
| 10 | | | | | | |
| 11 | Total System | | | | | |
| 12 | Production | (760,198) | (760,198) | (760,198) | (760,198) | (760,198) |
| 13 | Energy Storage | - | - | - | - | - |
| 14 | Transmission | (425,569) | (425,569) | (530,058) | (425,569) | (425,569) |
| 15 | Distribution | (1,029,681) | (1,029,681) | (2,332,083) | (1,029,681) | (1,029,681) |
| 16 | General & Intangible | (59,190) | (59,190) | (75,161) | (59,190) | (59,190) |
| 17 | Electric Plant Acq. Adj. | (18,065) | (18,064) | (18,064) | (18,264) | (18,263) |
| 18 | **Total** | **(2,292,703)** | **(2,292,702)** | **(3,715,563)** | **(2,292,902)** | **(2,292,901)** |
| 19 | | | | | | |
| 20 | PNM Base Rate | | | | | |
| 21 | Production | (625,399) | (625,399) | (625,399) | (625,399) | (625,399) |
| 22 | Energy Storage | - | - | - | - | - |
| 23 | Transmission | (958,153) | (958,153) | (1,193,405) | (958,153) | (958,153) |
| 24 | Distribution | (1,043,483) | (1,043,483) | (2,363,344) | (1,043,483) | (1,043,483) |
| 25 | General & Intangible | (54,750) | (54,750) | (69,523) | (54,750) | (54,750) |
| 26 | Electric Plant Acq. Adj. | (18,065) | (18,064) | (18,064) | (18,264) | (18,263) |
| 27 | **Total** | **(2,699,851)** | **(2,699,850)** | **(4,269,735)** | **(2,700,050)** | **(2,700,049)** |

| | A | G | H | I | J | K |
|---|---|---|---|---|---|---|
| 1 | **Public Service Company of New Mexico** | | | | | |
| 2 | **Schedule P-3** | | | | | |
| 3 | **Property Retirements and Property** | | | | | |
| 4 | **Investment Information-Retirements** | | | | | |
| 5 | **Test Period Ending 9/30/2028** | | | | | |
| 6 | **This schedule is sponsored by** | | | | | |
| 7 | **PNM Witness Gutierrez** | | | | | |
| 8 | | | | | | |
| 9 | **Description** | **Mar-28** | **Apr-28** | **May-28** | **Jun-28** | **Jul-28** |
| 10 | | | | | | |
| 11 | Total System | | | | | |
| 12 | Production | (760,198) | (760,198) | (760,198) | (760,198) | (760,198) |
| 13 | Energy Storage | - | - | - | - | - |
| 14 | Transmission | (425,569) | (425,569) | (425,569) | (1,817,249) | (425,569) |
| 15 | Distribution | (1,029,681) | (1,029,681) | (1,029,681) | (2,587,721) | (1,029,681) |
| 16 | General & Intangible | (59,190) | (59,190) | (59,190) | (553,565) | (59,190) |
| 17 | Electric Plant Acq. Adj. | (18,263) | (18,262) | (18,262) | (18,261) | (18,260) |
| 18 | **Total** | **(2,292,901)** | **(2,292,900)** | **(2,292,900)** | **(5,736,995)** | **(2,292,898)** |
| 19 | | | | | | |
| 20 | PNM Base Rate | | | | | |
| 21 | Production | (625,399) | (625,399) | (625,399) | (625,399) | (625,399) |
| 22 | Energy Storage | - | - | - | - | - |
| 23 | Transmission | (958,153) | (958,153) | (958,153) | (4,091,469) | (958,153) |
| 24 | Distribution | (1,043,483) | (1,043,483) | (1,043,483) | (2,622,409) | (1,043,483) |
| 25 | General & Intangible | (54,750) | (54,750) | (54,750) | (512,044) | (54,750) |
| 26 | Electric Plant Acq. Adj. | (18,263) | (18,262) | (18,262) | (18,261) | (18,260) |
| 27 | **Total** | **(2,700,049)** | **(2,700,048)** | **(2,700,047)** | **(7,869,582)** | **(2,700,046)** |

| | A | L | M | N |
|---|---|---|---|---|
| 1 | **Public Service Company of New Mexico** | | | |
| 2 | **Schedule P-3** | | | |
| 3 | **Property Retirements and Property** | | | |
| 4 | **Investment Information-Retirements** | | | |
| 5 | **Test Period Ending 9/30/2028** | | | |
| 6 | **This schedule is sponsored by** | | | |
| 7 | **PNM Witness Gutierrez** | | | |
| 8 | | | | |
| 9 | **Description** | **Aug-28** | **Sep-28** | **Reference** |
| 10 | | | | |
| 11 | Total System | | | |
| 12 | Production | (760,198) | (760,198) | |
| 13 | Energy Storage | - | - | |
| 14 | Transmission | (425,569) | (425,569) | |
| 15 | Distribution | (1,029,681) | (1,029,681) | |
| 16 | General & Intangible | (59,190) | (59,190) | |
| 17 | Electric Plant Acq. Adj. | (18,260) | (18,259) | |
| 18 | **Total** | **(2,292,898)** | **(2,292,897)** | |
| 19 | | | | |
| 20 | PNM Base Rate | | | |
| 21 | Production | (625,399) | (625,399) | |
| 22 | Energy Storage | - | - | |
| 23 | Transmission | (958,153) | (958,153) | |
| 24 | Distribution | (1,043,483) | (1,043,483) | |
| 25 | General & Intangible | (54,750) | (54,750) | |
| 26 | Electric Plant Acq. Adj. | (18,260) | (18,259) | |
| 27 | **Total** | **(2,700,046)** | **(2,700,045)** | |

| | A | B | C | D | E | F |
|---|---|---|---|---|---|---|
| 1 | **Public Service Company of New Mexico** | | | | | |
| 2 | **Schedule P-3** | | | | | |
| 3 | **Property Retirements and Property** | | | | | |
| 4 | **Investment Information - Investments** | | | | | |
| 5 | **Four Years Prior To Test Period,** | | | | | |
| 6 | **Five Years Beyond Base Period and** | | | | | |
| 7 | **Test Period Ending 9/30/2028** | | | | | |
| 8 | **This schedule is sponsored by** | | | | | |
| 9 | **PNM Witness Gutierrez** | | | | | |
| 10 | | | | | | |
| 11 | **Description** | **Year Ended 12/31/2023** | **Year Ended 12/31/2024** | **Year Ended 12/31/2025** | **Unadjusted Base Period Ended 6/30/2026** | **Year Ended 12/31/2026** |
| 12 | | | | | | |
| 13 | Total System | | | | | |
| 14 | Production | 65,211,504 | 78,914,806 | 88,965,817 | 52,432,234 | 39,071,633 |
| 15 | Energy Storage | - | - | 702,637 | 124,030,193 | 133,387,259 |
| 16 | Transmission | 88,338,308 | 304,377,193 | 144,767,360 | 130,339,632 | 73,558,585 |
| 17 | Distribution | 170,996,964 | 267,393,178 | 279,494,226 | 291,534,462 | 275,768,444 |
| 18 | General & Intangible | 32,365,713 | 51,138,220 | 10,124,409 | 11,362,659 | 8,942,702 |
| 19 | Electric Plant Acq. Adj. | - | - | - | - | - |
| 20 | **Total** | **356,912,488** | **701,823,397** | **524,054,449** | **609,699,180** | **530,728,622** |
| 21 | | | | | | |
| 22 | PNM Base Rate | | | | | |
| 23 | Production | 65,180,603 | 78,914,807 | 88,965,818 | 52,432,234 | 39,071,633 |
| 24 | Energy Storage | - | - | 702,637 | 124,030,193 | 133,387,260 |
| 25 | Transmission | 41,500,758 | 142,932,692 | 67,981,403 | 61,206,276 | 34,542,426 |
| 26 | Distribution | 170,996,964 | 247,924,700 | 259,144,690 | 270,308,295 | 255,690,176 |
| 27 | General & Intangible | 29,798,757 | 47,406,820 | 9,385,662 | 10,533,560 | 8,290,180 |
| 28 | Electric Plant Acq. Adj. | - | - | - | - | - |
| 29 | **Total** | **307,477,082** | **517,179,019** | **426,180,209** | **518,510,559** | **470,981,674** |

| | A | G | H | I | J | K |
|---|---|---|---|---|---|---|
| 1 | **Public Service Company of New Mexico** | | | | | |
| 2 | **Schedule P-3** | | | | | |
| 3 | **Property Retirements and Property** | | | | | |
| 4 | **Investment Information - Investments** | | | | | |
| 5 | **Four Years Prior To Test Period,** | | | | | |
| 6 | **Five Years Beyond Base Period and** | | | | | |
| 7 | **Test Period Ending 9/30/2028** | | | | | |
| 8 | **This schedule is sponsored by** | | | | | |
| 9 | **PNM Witness Gutierrez** | | | | | |
| 10 | | | | | | |
| 11 | **Description** | **Year Ended 12/31/2027** | **Unadjusted Test Period Ended 9/30/2028** | **Year Ended 12/31/2028** | **Year Ended 12/31/2029** | **Year Ended 12/31/2030** |
| 12 | | | | | | |
| 13 | Total System | | | | | |
| 14 | Production | 56,427,031 | 60,905,750 | 74,476,907 | 86,723,814 | 59,119,632 |
| 15 | Energy Storage | 330,744,229 | 5,941,686 | - | - | - |
| 16 | Transmission | 163,935,280 | 333,224,318 | 362,050,512 | 913,219,790 | 140,227,313 |
| 17 | Distribution | 356,134,023 | 365,381,445 | 368,974,489 | 337,539,248 | 397,088,469 |
| 18 | General & Intangible | 28,696,118 | 34,101,420 | 43,022,517 | 267,483,027 | 35,155,486 |
| 19 | Electric Plant Acq. Adj. | - | - | - | - | - |
| 20 | **Total** | **935,936,680** | **799,554,618** | **848,524,425** | **1,604,965,879** | **631,590,900** |
| 21 | | | | | | |
| 22 | PNM Base Rate | | | | | |
| 23 | Production | 56,427,031 | 50,105,923 | 61,270,638 | 71,345,920 | 48,636,521 |
| 24 | Energy Storage | 330,744,229 | 7,550,768 | - | - | - |
| 25 | Transmission | 76,982,479 | 750,242,019 | 815,143,111 | 2,056,080,011 | 315,716,521 |
| 26 | Distribution | 330,204,463 | 370,279,248 | 373,920,456 | 342,063,836 | 402,411,293 |
| 27 | General & Intangible | 26,602,249 | 31,543,597 | 39,795,555 | 247,420,103 | 32,518,601 |
| 28 | Electric Plant Acq. Adj. | - | - | - | - | - |
| 29 | **Total** | **820,960,452** | **1,209,721,555** | **1,290,129,760** | **2,716,909,870** | **799,282,936** |

| | A | L | M |
|---|---|---|---|
| 1 | **Public Service Company of New Mexico** | | |
| 2 | **Schedule P-3** | | |
| 3 | **Property Retirements and Property** | | |
| 4 | **Investment Information - Investments** | | |
| 5 | **Four Years Prior To Test Period,** | | |
| 6 | **Five Years Beyond Base Period and** | | |
| 7 | **Test Period Ending 9/30/2028** | | |
| 8 | **This schedule is sponsored by** | | |
| 9 | **PNM Witness Gutierrez** | | |
| 10 | | | |
| 11 | **Description** | **Year Ended 12/31/2031** | **Reference** |
| 12 | | | |
| 13 | Total System | | |
| 14 | Production | 140,825,752 | |
| 15 | Energy Storage | - | |
| 16 | Transmission | 65,261,206 | |
| 17 | Distribution | 373,992,210 | |
| 18 | General & Intangible | 36,759,810 | |
| 19 | Electric Plant Acq. Adj. | - | |
| 20 | **Total** | **616,838,977** | |
| 21 | | | |
| 22 | PNM Base Rate | | |
| 23 | Production | 115,854,486 | |
| 24 | Energy Storage | - | |
| 25 | Transmission | 146,933,150 | |
| 26 | Distribution | 379,005,437 | |
| 27 | General & Intangible | 34,002,591 | |
| 28 | Electric Plant Acq. Adj. | - | |
| 29 | **Total** | **675,795,663** | |

| | A | B | C | D | E | F |
|---|---|---|---|---|---|---|
| 1 | **Public Service Company of New Mexico** | | | | | |
| 2 | **Schedule P-3** | | | | | |
| 3 | **Property Retirements and Property** | | | | | |
| 4 | **Investment Information-Investments** | | | | | |
| 5 | **Test Period Ending 9/30/2028** | | | | | |
| 6 | **This schedule is sponsored by** | | | | | |
| 7 | **PNM Witness Gutierrez** | | | | | |
| 8 | | | | | | |
| 9 | **Description** | **Aug-27** | **Sep-27** | **Oct-27** | **Nov-27** | **Dec-27** |
| 10 | | | | | | |
| 11 | Total System | | | | | |
| 12 | Production | 2,101,608 | 4,660,193 | 23,915,281 | 2,053,294 | 336,954 |
| 13 | Energy Storage | - | - | 5,941,686 | - | - |
| 14 | Transmission | 8,369,834 | 567,931 | 48,455,142 | 6,119,756 | 15,177,387 |
| 15 | Distribution | 20,129,864 | 12,972,524 | 87,610,739 | 22,645,708 | 15,039,800 |
| 16 | General & Intangible | 3,558,700 | 15,276,473 | 6,349,761 | - | 3,379,431 |
| 17 | Electric Plant Acq. Adj. | - | - | - | - | - |
| 18 | **Total** | **34,160,007** | **33,477,121** | **172,272,609** | **30,818,757** | **33,933,572** |
| 19 | | | | | | |
| 20 | Total System | | | | | |
| 21 | Production | 1,728,950 | 3,833,846 | 19,674,616 | 1,689,203 | 277,205 |
| 22 | Energy Storage | - | - | 7,550,768 | - | - |
| 23 | Transmission | 18,844,368 | 1,278,675 | 109,094,929 | 13,778,401 | 34,171,317 |
| 24 | Distribution | 20,399,697 | 13,146,416 | 88,785,129 | 22,949,265 | 15,241,403 |
| 25 | General & Intangible | 3,291,775 | 14,130,640 | 5,873,489 | - | 3,125,952 |
| 26 | Electric Plant Acq. Adj. | - | - | - | - | - |
| 27 | **Total** | **44,264,790** | **32,389,577** | **230,978,931** | **38,416,869** | **52,815,877** |

| | A | G | H | I | J | K |
|---|---|---|---|---|---|---|
| 1 | **Public Service Company of New Mexico** | | | | | |
| 2 | **Schedule P-3** | | | | | |
| 3 | **Property Retirements and Property** | | | | | |
| 4 | **Investment Information-Investments** | | | | | |
| 5 | **Test Period Ending 9/30/2028** | | | | | |
| 6 | **This schedule is sponsored by** | | | | | |
| 7 | **PNM Witness Gutierrez** | | | | | |
| 8 | | | | | | |
| 9 | **Description** | **Jan-28** | **Feb-28** | **Mar-28** | **Apr-28** | **May-28** |
| 10 | | | | | | |
| 11 | Total System | | | | | |
| 12 | Production | 4,903,499 | 12,224,816 | 5,197,693 | 1,074,814 | 1,631,264 |
| 13 | Energy Storage | - | - | - | - | - |
| 14 | Transmission | 1,460,594 | 9,139,372 | 35,098,091 | 106,625,228 | 631,946 |
| 15 | Distribution | 21,826,677 | 36,265,709 | 18,301,038 | 20,342,234 | 25,654,852 |
| 16 | General & Intangible | 302,019 | 201,835 | 12,643 | 302,021 | 188,396 |
| 17 | Electric Plant Acq. Adj. | - | - | - | - | - |
| 18 | **Total** | **28,492,788** | **57,831,733** | **58,609,466** | **128,344,297** | **28,106,458** |
| 19 | | | | | | |
| 20 | Total System | | | | | |
| 21 | Production | 4,034,009 | 10,057,108 | 4,276,036 | 884,228 | 1,342,008 |
| 22 | Energy Storage | - | - | - | - | - |
| 23 | Transmission | 3,288,471 | 20,576,953 | 79,022,032 | 240,062,691 | 1,422,802 |
| 24 | Distribution | 22,119,255 | 36,751,838 | 18,546,357 | 20,614,914 | 25,998,746 |
| 25 | General & Intangible | 279,365 | 186,696 | 11,695 | 279,367 | 174,265 |
| 26 | Electric Plant Acq. Adj. | - | - | - | - | - |
| 27 | **Total** | **29,721,101** | **67,572,595** | **101,856,120** | **261,841,200** | **28,937,821** |

| | A | L | M | N |
|---|---|---|---|---|
| 1 | **Public Service Company of New Mexico** | | | |
| 2 | **Schedule P-3** | | | |
| 3 | **Property Retirements and Property** | | | |
| 4 | **Investment Information-Investments** | | | |
| 5 | **Test Period Ending 9/30/2028** | | | |
| 6 | **This schedule is sponsored by** | | | |
| 7 | **PNM Witness Gutierrez** | | | |
| 8 | | | | |
| 9 | **Description** | **Jun-28** | **Jul-28** | **Reference** |
| 10 | | | | |
| 11 | Total System | | | |
| 12 | Production | 2,382,178 | 424,156 | |
| 13 | Energy Storage | - | - | |
| 14 | Transmission | 67,890,791 | 33,688,246 | |
| 15 | Distribution | 33,271,785 | 51,320,515 | |
| 16 | General & Intangible | 1,813,875 | 2,716,266 | |
| 17 | Electric Plant Acq. Adj. | - | - | |
| 18 | **Total** | **105,358,629** | **88,149,182** | |
| 19 | | | | |
| 20 | Total System | | | |
| 21 | Production | 1,959,770 | 348,944 | |
| 22 | Energy Storage | - | - | |
| 23 | Transmission | 152,853,564 | 75,847,819 | |
| 24 | Distribution | 33,717,781 | 52,008,447 | |
| 25 | General & Intangible | 1,677,822 | 2,512,529 | |
| 26 | Electric Plant Acq. Adj. | - | - | |
| 27 | **Total** | **190,208,936** | **130,717,739** | |

| | A | B |
|---|---|---|
| 1 | **Public Service Company of New Mexico** | |
| 2 | **Schedule P-3** | |
| 3 | **Property Retirements and Property Investment Information-Investments (Notes)** | |
| 4 | **This schedule is sponsored by PNM Witness Gutierrez** | |
| 5 | | |
| 6 | **Schedule P-3** | |
| 7 | **Property Retirements and Property Investment Information - Retirements** | |
| 8 | **Four Years Prior To Test Period, Five Years Beyond Base Period and Test Period Ending 9/30/2028** | |
| 9 | PNM calculated Base Rate Share at June 30, 2026 (Base Period) and September 30, 2028 (Test Period) using the | |
| 10 | Allocators found in PNM Exhibit RNG-3. | |
| 11 | PNM allocated the linkage data and information beyond the Test Period, based on the relationship of PNM Base Rate to | |
| 12 | total system in the Test Period. | |
| 13 | PNM allocated the historical data based on the relationship of PNM Base Rate to total system in the Base Period. | |
| 14 | PNM has excluded balances associated with Grid Modernization from PNM Base Rate as they are pending approval in | |
| 15 | NMPRC Docket No. 22-00058-UT, and a proposed to be recovered under a separate rider mechanism. | |
| 16 | PNM has excluded balances associated with Renewables from PNM Base Rate as they are collected using a Rider | |
| 17 | Base period data is historical information from the Company's Book Balance Amounts | |
| 18 | | |
| 19 | **Schedule P-3** | |
| 20 | **Property Retirements and Property Investment Information-Retirements** | |
| 21 | **Test Period Ending 9/30/2028** | |
| 22 | PNM calculated PNM Base Rate Share September 30, 2028 (Test Period) using the Allocators found in PNM Exhibit RNG-3. | |
| 23 | | |
| 24 | **Schedule P-3** | |
| 25 | **Property Retirements and Property Investment Information - Investments** | |
| 26 | **Four Years Prior To Test Period, Five Years Beyond Base Period and Test Period Ending 9/30/2028** | |
| 27 | PNM calculated PNM Base Rate Share at June 30, 2026 (Base Period) and September 30, 2028 (Test Period) using the | |
| 28 | Allocators found in PNM Exhibit RNG-3. | |
| 29 | PNM allocated the linkage data and information beyond the Test Period, based on the relationship of PNM Base Rate to | |
| 30 | total system in the Test Period. | |
| 31 | PNM allocated the historical data based on the relationship of PNM Base Rate to total system in the Base Period. | |
| 32 | Base period data is historical information from the Company's Book Balance Amounts | |
| 33 | | |
| 34 | **Schedule P-3** | |
| 35 | **Property Retirements and Property Investment Information-Investments** | |
| 36 | **Test Period Ending 9/30/2026** | |
| 37 | PNM calculated PNM Base Rate Share September 30, 2028 (Test Period) using the Allocators found in PNM Exhibit RNG-3. | |

# PNM Schedule P-4

Operation and maintenance expense information

| | A | B | C | D | E | F |
|---|---|---|---|---|---|---|
| 1 | **Public Service Company of New Mexico** | | | | | |
| 2 | **Schedule P-4** | | | | | |
| 3 | **Operations and Maintenance Expense** | | | | | |
| 4 | **Information Excluding Fuel and Purchased** | | | | | |
| 5 | **Power and Fuel Related Items** | | | | | |
| 6 | **Four Years Prior To Test Period,** | | | | | |
| 7 | **Five Years Beyond Base Period and** | | | | | |
| 8 | **Test Period Ending 9/30/2028** | | | | | |
| 9 | **This schedule is sponsored by** | | | | | |
| 10 | **PNM Witness Gutierrez** | | | | | |
| 11 | | | | | | |
| 12 | **Description** | **Year Ended 12/31/2023** | **Year Ended 12/31/2024** | **Year Ended 12/31/2025** | **Undjusted Base Period Ended 6/30/2026** | **Adjusted Base Period** |
| 13 | | | | | | |
| 14 | Total System | | | | | |
| 15 | Production | 88,978,754 | 91,093,669 | 92,477,362 | 95,138,279 | 96,990,246 |
| 16 | Energy Storage | - | - | - | 81,288 | 80,171 |
| 17 | Transmission | 53,805,346 | 46,568,753 | 50,771,567 | 56,122,837 | 65,605,256 |
| 18 | Distribution | 34,441,393 | 32,871,612 | 35,132,955 | 37,468,475 | 39,874,619 |
| 19 | Customer | 30,564,996 | 30,992,845 | 30,727,212 | 32,154,814 | 32,823,024 |
| 20 | A&G | 178,058,559 | 191,194,595 | 266,050,702 | 269,002,091 | 102,658,842 |
| 21 | **Total** | **385,849,048** | **392,721,474** | **475,159,797** | **489,967,785** | **338,032,157** |
| 22 | | | | | | |
| 23 | PNM Base Rate | | | | | |
| 24 | Production | 86,393,175 | 88,445,958 | 89,789,432 | 92,318,989 | 94,171,146 |
| 25 | Energy Storage | - | - | - | 81,288 | 80,171 |
| 26 | Transmission | 38,349,548 | 34,736,735 | 37,871,713 | 40,469,784 | 48,936,513 |
| 27 | Distribution | 33,805,864 | 32,871,612 | 35,132,955 | 37,468,475 | 39,874,619 |
| 28 | Customer | 23,200,115 | 30,992,845 | 30,727,212 | 32,154,814 | 32,823,024 |
| 29 | A&G | 162,907,116 | 174,073,692 | 242,226,659 | 247,006,691 | 93,466,050 |
| 30 | **Total** | **344,655,817** | **361,120,842** | **435,747,971** | **449,500,042** | **309,351,522** |

| | A | G | H | I | J | K |
|---|---|---|---|---|---|---|
| 1 | **Public Service Company of New Mexico** | | | | | |
| 2 | **Schedule P-4** | | | | | |
| 3 | **Operations and Maintenance Expense** | | | | | |
| 4 | **Information Excluding Fuel and Purchased** | | | | | |
| 5 | **Power and Fuel Related Items** | | | | | |
| 6 | **Four Years Prior To Test Period,** | | | | | |
| 7 | **Five Years Beyond Base Period and** | | | | | |
| 8 | **Test Period Ending 9/30/2028** | | | | | |
| 9 | **This schedule is sponsored by** | | | | | |
| 10 | **PNM Witness Gutierrez** | | | | | |
| 11 | | | | | | |
| 12 | **Description** | **Linkage 1 Year Ended 6/30/2027** | **Linkage 2 Year Ended 9/30/2027** | **Test Period Ended 9/30/2028** | **Year Ended 12/31/2029** | **Year Ended 12/31/2030** |
| 13 | | | | | | |
| 14 | Total System | | | | | |
| 15 | Production | 99,536,891 | 99,671,593 | 103,645,590 | 106,754,958 | 109,957,607 |
| 16 | Energy Storage | 82,318 | 82,467 | 1,803,213 | 1,857,309 | 1,913,029 |
| 17 | Transmission | 68,115,251 | 68,498,966 | 73,989,667 | 76,209,357 | 78,495,638 |
| 18 | Distribution | 40,599,351 | 40,842,234 | 71,956,180 | 74,114,865 | 76,338,311 |
| 19 | Customer | 33,460,406 | 33,634,060 | 38,220,220 | 39,366,826 | 40,547,831 |
| 20 | A&G | 101,769,673 | 103,715,415 | 118,245,449 | 121,792,812 | 125,446,597 |
| 21 | **Total** | **343,563,890** | **346,444,735** | **407,860,319** | **420,096,129** | **432,699,013** |
| 22 | | | | | | |
| 23 | PNM Base Rate | | | | | |
| 24 | Production | 96,643,770 | 96,774,557 | 100,806,811 | 103,831,015 | 106,945,946 |
| 25 | Energy Storage | 82,318 | 82,467 | 1,803,213 | 1,857,309 | 1,913,029 |
| 26 | Transmission | 50,808,778 | 51,095,000 | 53,401,457 | 55,003,501 | 56,653,606 |
| 27 | Distribution | 40,599,351 | 40,842,234 | 58,703,193 | 60,464,289 | 62,278,218 |
| 28 | Customer | 33,460,406 | 33,634,060 | 38,220,220 | 39,366,826 | 40,547,831 |
| 29 | A&G | 92,656,504 | 94,428,011 | 106,521,292 | 109,716,931 | 113,008,438 |
| 30 | **Total** | **314,251,127** | **316,856,328** | **359,456,186** | **370,239,871** | **381,347,067** |

| | A | L | M |
|---|---|---|---|
| 1 | **Public Service Company of New Mexico** | | |
| 2 | **Schedule P-4** | | |
| 3 | **Operations and Maintenance Expense** | | |
| 4 | **Information Excluding Fuel and Purchased** | | |
| 5 | **Power and Fuel Related Items** | | |
| 6 | **Four Years Prior To Test Period,** | | |
| 7 | **Five Years Beyond Base Period and** | | |
| 8 | **Test Period Ending 9/30/2028** | | |
| 9 | **This schedule is sponsored by** | | |
| 10 | **PNM Witness Gutierrez** | | |
| 11 | | | |
| 12 | **Description** | **Year Ended 12/31/2031** | **Reference** |
| 13 | | | |
| 14 | Total System | | |
| 15 | Production | 113,256,335 | |
| 16 | Energy Storage | 1,970,420 | |
| 17 | Transmission | 80,850,507 | |
| 18 | Distribution | 78,628,461 | |
| 19 | Customer | 41,764,266 | |
| 20 | A&G | 129,209,995 | |
| 21 | **Total** | **445,679,983** | |
| 22 | | | |
| 23 | PNM Base Rate | | |
| 24 | Production | 110,154,324 | |
| 25 | Energy Storage | 1,970,420 | |
| 26 | Transmission | 58,353,214 | |
| 27 | Distribution | 64,146,564 | |
| 28 | Customer | 41,764,266 | |
| 29 | A&G | 116,398,692 | |
| 30 | **Total** | **392,787,479** | |

| | A | B | C | D | E | F |
|---|---|---|---|---|---|---|
| 1 | **Public Service Company of New Mexico** | | | | | |
| 2 | **Schedule P-4** | | | | | |
| 3 | **Operations and Maintenance Expense** | | | | | |
| 4 | **Information Excluding Fuel and Purchased** | | | | | |
| 5 | **Power and Fuel Related Items** | | | | | |
| 6 | **Test Period Ending 9/30/2028** | | | | | |
| 7 | **This schedule is sponsored by** | | | | | |
| 8 | **PNM Witness Gutierrez** | | | | | |
| 9 | | | | | | |
| 10 | **Description** | **Oct-27** | **Nov-27** | **Dec-27** | **Jan-28** | **Feb-28** |
| 11 | | | | | | |
| 12 | Total System | | | | | |
| 13 | Production | 8,637,133 | 8,637,133 | 8,637,133 | 8,637,133 | 8,637,133 |
| 14 | Energy Storage | 150,268 | 150,268 | 150,268 | 150,268 | 150,268 |
| 15 | Transmission | 6,165,806 | 6,165,806 | 6,165,806 | 6,165,806 | 6,165,806 |
| 16 | Distribution | 5,996,348 | 5,996,348 | 5,996,348 | 5,996,348 | 5,996,348 |
| 17 | Customer | 3,185,018 | 3,185,018 | 3,185,018 | 3,185,018 | 3,185,018 |
| 18 | A&G | 9,853,787 | 9,853,787 | 9,853,787 | 9,853,787 | 9,853,787 |
| 19 | **Total** | **33,988,360** | **33,988,360** | **33,988,360** | **33,988,360** | **33,988,360** |
| 20 | | | | | | |
| 21 | PNM Base Rate | | | | | |
| 22 | Production | 8,400,568 | 8,400,568 | 8,400,568 | 8,400,568 | 8,400,568 |
| 23 | Energy Storage | 150,268 | 150,268 | 150,268 | 150,268 | 150,268 |
| 24 | Transmission | 4,450,121 | 4,450,121 | 4,450,121 | 4,450,121 | 4,450,121 |
| 25 | Distribution | 4,891,933 | 4,891,933 | 4,891,933 | 4,891,933 | 4,891,933 |
| 26 | Customer | 3,185,018 | 3,185,018 | 3,185,018 | 3,185,018 | 3,185,018 |
| 27 | A&G | 8,876,774 | 8,876,774 | 8,876,774 | 8,876,774 | 8,876,774 |
| 28 | **Total** | **29,954,682** | **29,954,682** | **29,954,682** | **29,954,682** | **29,954,682** |

| | A | G | H | I | J | K |
|---|---|---|---|---|---|---|
| 1 | **Public Service Company of New Mexico** | | | | | |
| 2 | **Schedule P-4** | | | | | |
| 3 | **Operations and Maintenance Expense** | | | | | |
| 4 | **Information Excluding Fuel and Purchased** | | | | | |
| 5 | **Power and Fuel Related Items** | | | | | |
| 6 | **Test Period Ending 9/30/2028** | | | | | |
| 7 | **This schedule is sponsored by** | | | | | |
| 8 | **PNM Witness Gutierrez** | | | | | |
| 9 | | | | | | |
| 10 | **Description** | **Mar-28** | **Apr-28** | **May-28** | **Jun-28** | **Jul-28** |
| 11 | | | | | | |
| 12 | Total System | | | | | |
| 13 | Production | 8,637,133 | 8,637,133 | 8,637,133 | 8,637,133 | 8,637,133 |
| 14 | Energy Storage | 150,268 | 150,268 | 150,268 | 150,268 | 150,268 |
| 15 | Transmission | 6,165,806 | 6,165,806 | 6,165,806 | 6,165,806 | 6,165,806 |
| 16 | Distribution | 5,996,348 | 5,996,348 | 5,996,348 | 5,996,348 | 5,996,348 |
| 17 | Customer | 3,185,018 | 3,185,018 | 3,185,018 | 3,185,018 | 3,185,018 |
| 18 | A&G | 9,853,787 | 9,853,787 | 9,853,787 | 9,853,787 | 9,853,787 |
| 19 | **Total** | **33,988,360** | **33,988,360** | **33,988,360** | **33,988,360** | **33,988,360** |
| 20 | | | | | | |
| 21 | PNM Base Rate | | | | | |
| 22 | Production | 8,400,568 | 8,400,568 | 8,400,568 | 8,400,568 | 8,400,568 |
| 23 | Energy Storage | 150,268 | 150,268 | 150,268 | 150,268 | 150,268 |
| 24 | Transmission | 4,450,121 | 4,450,121 | 4,450,121 | 4,450,121 | 4,450,121 |
| 25 | Distribution | 4,891,933 | 4,891,933 | 4,891,933 | 4,891,933 | 4,891,933 |
| 26 | Customer | 3,185,018 | 3,185,018 | 3,185,018 | 3,185,018 | 3,185,018 |
| 27 | A&G | 8,876,774 | 8,876,774 | 8,876,774 | 8,876,774 | 8,876,774 |
| 28 | **Total** | **29,954,682** | **29,954,682** | **29,954,682** | **29,954,682** | **29,954,682** |

| | A | L | M | N | O |
|---|---|---|---|---|---|
| 1 | **Public Service Company of New Mexico** | | | | |
| 2 | **Schedule P-4** | | | | |
| 3 | **Operations and Maintenance Expense** | | | | |
| 4 | **Information Excluding Fuel and Purchased** | | | | |
| 5 | **Power and Fuel Related Items** | | | | |
| 6 | **Test Period Ending 9/30/2028** | | | | |
| 7 | **This schedule is sponsored by** | | | | |
| 8 | **PNM Witness Gutierrez** | | | | |
| 9 | | | | | |
| 10 | **Description** | **Aug-28** | **Sep-28** | **Total** | **PNM Exhibit RNG-3 COS Test** |
| 11 | | | | | |
| 12 | Total System | | | | |
| 13 | Production | 8,637,133 | 8,637,133 | 103,645,590 | Line 336 |
| 14 | Energy Storage | 150,268 | 150,268 | 1,803,213 | Line 342 |
| 15 | Transmission | 6,165,806 | 6,165,806 | 73,989,667 | Line 365 |
| 16 | Distribution | 5,996,348 | 5,996,348 | 71,956,180 | Line 398 |
| 17 | Customer | 3,185,018 | 3,185,018 | 38,220,220 | Line 416 |
| 18 | A&G | 9,853,787 | 9,853,787 | 118,245,449 | Line 440 |
| 19 | **Total** | **33,988,360** | **33,988,360** | **407,860,319** | |
| 20 | | | | | |
| 21 | PNM Base Rate | | | | |
| 22 | Production | 8,400,568 | 8,400,568 | 100,806,811 | Line 336 |
| 23 | Energy Storage | 150,268 | 150,268 | 1,803,213 | Line 342 |
| 24 | Transmission | 4,450,121 | 4,450,121 | 53,401,457 | Line 365 |
| 25 | Distribution | 4,891,933 | 4,891,933 | 58,703,193 | Line 398 |
| 26 | Customer | 3,185,018 | 3,185,018 | 38,220,220 | Line 416 |
| 27 | A&G | 8,876,774 | 8,876,774 | 106,521,292 | Line 440 |
| 28 | **Total** | **29,954,682** | **29,954,682** | **359,456,186** | |

| | A |
|---|---|
| 1 | **Public Service Company of New Mexico** |
| 2 | **Schedule P-4** |
| 3 | **Operations and Maintenance Expense Information Excluding Fuel and Purchased Power** |
| 4 | **and Fuel Related Items (Notes)** |
| 5 | **This schedule is sponsored by PNM Witness Gutierrez** |
| 6 | |
| 7 | **Schedule P-4** |
| 8 | **Operations and Maintenance Expense Information Excluding Fuel and Purchased Power and Fuel Related Items** |
| 9 | **Four Years Prior To Test Period, Five Years Beyond Base Period and Test Period Ending 9/30/2028** |
| 10 | Implied allocations for the base period were applied to historical years. |
| 11 | Implied allocations for the test period were applied to three years beyond the test period. |
| 12 | For the years beyond the test period, PNM has escalated the OM expenses at 3.0%, annually. |
| 13 | PNM allocated the linkage data and information beyond the Test Period, based on the relationship of PNM Base Rate to |
| 14 | total system in the Test Period. |
| 15 | Base period data is historical information from the Company's Book Balance Amounts |
| 16 | |
| 17 | **Schedule P-4** |
| 18 | **Operations and Maintenance Expense Information Excluding Fuel and Purchased Power and Fuel Related Items** |
| 19 | **Test Period Ending 9/30/2028** |
| 20 | Please refer to PNM Exhibit RNG-4 WP OM for more information on development of test period expenses. |

# PNM Schedule P-5

Customer information

**Public Service Company of New Mexico**

**P-5 PNM Retail Customer Information**

Base Period Ending June 30, 2026

Test Period October 1, 2027 - September 30, 2028

| Line No. | Description | A Base Period | B Weather Normalization Adjustment (B = C - A) | C Base Period (Adj for Weather) | D Adjustment #1 (D = E - C) | E Test Period |
|---|---|---|---|---|---|---|
| 1 | **PNM Retail** | | | | | |
| 2 | **Schedule 1: Residential** | | | | | |
| 3 | Customer Count | 499,470 | 0 | 499,470 | 11,042 | 510,513 |
| 4 | kWh Sales | 3,233,561,510 | 93,376,600 | 3,326,938,110 | 65,442,182 | 3,392,380,292 |
| 5 | Revenue | $ 412,240,027 | 11,904,388 | 424,144,415 | 38,398,870 | $ 462,543,285 |
| 6 | **Schedule 2: Small Power** | | | | | |
| 7 | Customer Count | 54,766 | 0 | 54,766 | 839 | 55,605 |
| 8 | kWh Sales | 930,985,437 | (1,383,850) | 929,601,587 | 27,404,923 | 957,006,510 |
| 9 | Revenue | $ 105,681,708 | (157,089) | 105,524,619 | 6,391,486 | $ 111,916,105 |
| 10 | **Schedule 3: General Power** | | | | | |
| 11 | Customer Count | 4,313 | 0 | 4,313 | 41 | 4,354 |
| 12 | kWh Sales | 1,888,816,023 | (14,094,050) | 1,874,721,973 | 55,601,420 | 1,930,323,392 |
| 13 | Revenue | $ 157,006,602 | (1,171,559) | 155,835,044 | 16,392,171 | $ 172,227,214 |
| 14 | **Schedule 4: Large Power** | | | | | |
| 15 | Customer Count | 155 | 0 | 155 | 3 | 158 |
| 16 | kWh Sales | 858,477,083 | (9,894,040) | 848,583,043 | 134,148,083 | 982,731,126 |
| 17 | Revenue | $ 54,808,606 | (631,675) | 54,176,931 | 12,939,135 | $ 67,116,066 |
| 18 | **Schedule 6: Private Area Lighting** | | | | | |
| 19 | Unit Count | 11,806 | 0 | 11,806 | 1,470 | 13,275 |
| 20 | kWh Sales | 11,685,961 | 0 | 11,685,961 | (258,313) | 11,427,648 |
| 21 | Revenue | $ 2,290,091 | 0 | 2,290,091 | 173,387 | $ 2,463,478 |
| 22 | **Schedule 10: Irrigation** | | | | | |
| 23 | Customer Count | 315 | 0 | 315 | 1 | 316 |
| 24 | kWh Sales | 23,877,572 | 0 | 23,877,572 | 603,344 | 24,480,916 |
| 25 | Revenue | $ 2,032,375 | 0 | 2,032,375 | 226,586 | $ 2,258,961 |
| 26 | **Schedule 11: Water and Sewage Pumping** | | | | | |
| 27 | Customer Count | 152 | 0 | 152 | 1 | 153 |
| 28 | kWh Sales* | 173,019,001 | 0 | 173,019,001 | (6,182,536) | 166,836,465 |
| 29 | Revenue | $ 9,211,398 | 0 | 9,211,398 | (1,176,009) | $ 8,035,388 |
| 30 | **Schedule 20: Streetlighting** | | | | | |
| 31 | Unit Count | 49,288 | 0 | 49,288 | 2,571 | 51,859 |
| 32 | kWh Sales | 30,644,514 | 0 | 30,644,514 | (110,274) | 30,534,240 |
| 33 | Revenue | $ 5,206,125 | 0 | 5,206,125 | 233,228 | $ 5,439,353 |
| 31 | **Largest Commercial and Industrial Classes** | | | | | |
| 32 | **(Schedules 5B, 15B, 30B, 33B, 35B, 36B)** | | | | | |
| 33 | Customer Count | 9 | 0 | 9 | 10 | 19 |
| 34 | kWh Sales | 2,609,572,129 | (651,930) | 2,608,920,199 | 2,358,917,212 | 4,967,837,411 |
| 35 | Revenue* | $ 109,127,082 | (27,256) | 109,099,826 | 1,009,960 | $ 110,109,786 |
| 36 | **Total for All Classes** | | | | | |
| 37 | Customer Count (exc. Schedules 6 & 20) | 559,180 | 0 | 559,180 | 11,936 | 571,117 |
| 38 | kWh Sales | 9,760,639,230 | 67,352,730 | 9,827,991,960 | 2,635,566,041 | 12,463,558,001 |
| 39 | Revenue | $ 857,604,015 | $ 9,916,809 | $ 867,520,824 | $ 74,588,813 | $ 942,109,637 |

Notes:

Test Period revenues are based on current rates.

This schedule is sponsored by PNM Witness Hayat

**Public Service Company of New Mexico**

**P-5 PNM Retail Customer Information**

Four Years Prior to Test Period, Five Years Beyond Base Period, and Test Period Ending 09/30/2028

This schedule is sponsored by PNM witness Hayat

| Line No. | Year | A<br>Schedule 1: Residential | B<br>Schedule 2: Small Power | C<br>Schedule 3: General Power | D<br>Schedule 4: Large Power | E<br>Schedule 6: Private Area Lighting* | F<br>Schedule 10: Irrigation | G<br>Schedule 11: Water and Sewage Pumping | H<br>Schedule 20: Streetlighting* | I<br>Largest Commercial and Industrial Classes (Schedules 5B, 15B, 30B, 33B, 35B, 36B) |
|---|---|---|---|---|---|---|---|---|---|---|
| *Year-End Customers by Rate Classification* | | | | | | | | | | |
| **PNM Retail** | | | | | | | | | | |
| 1 | 2023 | 490,439 | 54,281 | 4,250 | 163 | 13,346 | 312 | 150 | 49,344 | 9 |
| 2 | 2024 | 495,101 | 54,301 | 4,340 | 158 | 12,610 | 310 | 149 | 47,572 | 9 |
| 3 | 2025 | 499,369 | 54,796 | 4,324 | 155 | 11,934 | 315 | 153 | 49,476 | 9 |
| 4 | Base Period Ended 6/30/2026 | 505,170 | 55,390 | 4,334 | 157 | 13,275 | 315 | 153 | 51,859 | 10 |
| 5 | 2027 | 509,295 | 55,570 | 4,349 | 158 | 13,275 | 315 | 153 | 51,859 | 10 |
| 6 | Test Period Ended 9/30/2028 | 513,572 | 55,742 | 4,365 | 158 | 13,275 | 315 | 153 | 51,859 | 10 |
| 7 | 2029 | 517,912 | 56,109 | 4,381 | 158 | 13,275 | 315 | 153 | 51,859 | 10 |
| 8 | 2030 | 522,098 | 56,468 | 4,396 | 159 | 13,275 | 315 | 153 | 51,859 | 10 |
| 9 | 2031 | 526,122 | 56,820 | 4,411 | 159 | 13,275 | 315 | 153 | 51,859 | 10 |
| 10 | 2032 | 529,990 | 57,165 | 4,426 | 159 | 13,275 | 315 | 153 | 51,859 | 10 |
| 11 | 2033 | 533,743 | 57,505 | 4,441 | 160 | 13,275 | 315 | 153 | 51,859 | 10 |

Notes:

* Counts given for lighting classes (Schedules 6 and 20) are unit counts as customer counts have little relevance for these classes

**Public Service Company of New Mexico**

**P-5 PNM Retail Customer Information**

Four Years Prior to Test Period, Five Years Beyond Base Period, and Test Period Ending 09/30/2028

This schedule is sponsored by PNM witness Hayat

| Line No. | Year | A<br>Schedule 1: Residential | B<br>Schedule 2: Small Power | C<br>Schedule 3: General Power | D<br>Schedule 4: Large Power | E<br>Schedule 6: Private Area Lighting* | F<br>Schedule 10: Irrigation | G<br>Schedule 11: Water and Sewage Pumping | H<br>Schedule 20: Streetlighting* | I<br>Largest Commercial and Industrial Classes (Schedules 5B, 15B, 30B, 33B, 35B, 36B) |
|---|---|---|---|---|---|---|---|---|---|---|
| *Average Customers by Rate Classification* | | | | | | | | | | |
| **PNM Retail** | | | | | | | | | | |
| 1 | 2023 | 488,458 | 54,333 | 4,175 | 161 | 13,549 | 311 | 150 | 49,425 | 9 |
| 2 | 2024 | 492,945 | 54,445 | 4,315 | 162 | 12,956 | 313 | 150 | 48,157 | 9 |
| 3 | 2025 | 497,044 | 54,515 | 4,301 | 155 | 12,127 | 314 | 150 | 48,346 | 9 |
| 4 | Base Period Ended 6/30/2026 | 502,516 | 55,115 | 4,327 | 155 | 13,275 | 316 | 153 | 51,859 | 9 |
| 5 | 2027 | 507,404 | 55,488 | 4,342 | 155 | 13,275 | 316 | 153 | 51,859 | 9 |
| 6 | Test Period Ended 9/30/2028 | 511,576 | 55,644 | 4,358 | 155 | 13,275 | 316 | 153 | 51,859 | 9 |
| 7 | 2029 | 515,942 | 55,942 | 4,374 | 155 | 13,275 | 316 | 153 | 51,859 | 9 |
| 8 | 2030 | 520,198 | 56,304 | 4,389 | 155 | 13,275 | 316 | 153 | 51,859 | 9 |
| 9 | 2031 | 524,299 | 56,660 | 4,404 | 156 | 13,275 | 316 | 153 | 51,859 | 9 |
| 10 | 2032 | 528,232 | 57,007 | 4,419 | 156 | 13,275 | 316 | 153 | 51,859 | 9 |
| 11 | 2033 | 532,036 | 57,350 | 4,434 | 156 | 13,275 | 316 | 153 | 51,859 | 9 |

Notes:

* Counts given for lighting classes (Schedules 6 and 20) are unit counts as customer counts have little relevance for these classes

**Public Service Company of New Mexico**

**P-5 PNM Retail Customer Information**

Four Years Prior to Test Period, Five Years Beyond Base Period, and Test Period Ending 09/30/2028

This schedule is sponsored by PNM Witness Hayat

| Line No. | Year | A<br>Schedule 1: Residential | B<br>Schedule 2: Small Power | C<br>Schedule 3: General Power | D<br>Schedule 4: Large Power | E<br>Schedule 6: Private Area Lighting* | F<br>Schedule 10: Irrigation | G<br>Schedule 11: Water and Sewage Pumping | H<br>Schedule 20: Streetlighting* | I<br>Largest Commercial and Industrial Classes (Schedules 5B, 15B, 30B, 33B, 35B, 36B) |
|---|---|---|---|---|---|---|---|---|---|---|
| *Annual MWh by Rate Classification* | | | | | | | | | | |
| **PNM Retail** | | | | | | | | | | |
| 1 | 2023 | 3,366,343 | 950,596 | 1,869,465 | 853,610 | 13,327 | 24,959 | 170,249 | 32,902 | 1,814,298 |
| 2 | 2024 | 3,389,220 | 938,487 | 1,896,535 | 866,963 | 12,715 | 25,853 | 177,202 | 31,106 | 1,965,390 |
| 3 | 2025 | 3,322,753 | 928,921 | 1,882,319 | 863,800 | 11,790 | 23,806 | 183,089 | 30,887 | 2,411,045 |
| 4 | Base Period Ended 6/30/2026 | 3,268,669 | 940,162 | 1,910,676 | 876,310 | 11,774 | 24,627 | 169,134 | 30,534 | 2,795,173 |
| 5 | 2027 | 3,366,224 | 949,823 | 1,915,322 | 950,546 | 11,574 | 24,351 | 167,451 | 30,534 | 3,875,866 |
| 6 | Test Period Ended 9/30/2028 | 3,400,794 | 959,529 | 1,935,585 | 983,229 | 11,380 | 24,506 | 166,627 | 30,534 | 5,277,497 |
| 7 | 2029 | 3,431,240 | 972,303 | 1,956,783 | 983,940 | 11,191 | 24,545 | 165,015 | 30,534 | 5,523,214 |
| 8 | 2030 | 3,447,105 | 981,748 | 1,969,750 | 982,108 | 11,008 | 24,639 | 163,696 | 30,534 | 5,536,210 |
| 9 | 2031 | 3,460,067 | 993,602 | 1,987,580 | 982,592 | 10,830 | 24,730 | 162,314 | 30,534 | 5,536,210 |
| 10 | 2032 | 3,476,203 | 1,008,196 | 2,011,169 | 986,129 | 10,657 | 24,876 | 161,223 | 30,534 | 5,551,099 |
| 11 | 2033 | 3,496,427 | 1,023,802 | 2,036,762 | 990,048 | 10,488 | 24,905 | 159,377 | 30,534 | 5,536,211 |

Notes:

* Counts given for lighting classes (Schedules 6 and 20) are unit counts for lights as customer counts have little relevance for these classes

# PNM Schedule P-6

Weather data

**Public Service Company of New Mexico**
**Schedule P-6**
**Weather Data**
**Base Period Ending 6/30/2026**
**Test Period Ending 9/30/2028**
**This schedule is sponsored by PNM Witness Hayat**

Base Period Weather:

Historical, actual hourly weather data representative of the calendar month is used for the Base Period weather through June 2026.

Historical Weather Data

Historical hourly weather data were acquired from AccuWeather, a major vendor for high quality weather data. Actual hourly drybulb temperature data are used to calculate daily average temperatures, daily heating degrees (HD) and daily cooling degrees (CD) for each of four weather stations. The daily values are then combined across stations using weights that represent the fraction of PNM energy associated with each station. One set of weights is computed for winter months and these weights are applied to HD values. One set of weights is computed for summer months, and these weights are applied to CD values. A final set of weights are computed for all months, and these weights are applied to average temperature and global horizontal irradiation values. The weights are shown below.

| Station | HD | CD | Overall |
|---|---|---|---|
| KABQ (Albuquerque) | 77.7% | 80.3% | 79.1% |
| KALM (Alamogordo) | 4.3% | 4.7% | 4.4% |
| KDMN (Deming) | 4.1% | 4.2% | 4.1% |
| KSAF (Santa Fe) | 13.9% | 10.9% | 12.3% |

The data shown on tab P6-2 are for calendar month HDD (sum of the daily HD values), calendar month CDD (sum of the daily CD values), and calendar month averge drybulb temperature. Historical data are shown for July 2016 through June of 2026. Values beyond June of 2026 are normal calendar month values computed from the 10-year average between 2015 and 2024.

Base Period Weather and Weather Adjustments:

Historical, actual hourly weather are shown for calendar months on tab P6-2 and for billing months on tab P6-3. The billing month data are used to estimate customer use models and to develop predicted values for customer sales. Normal values for the billing month are used to develop predicted values for customer sales with normal weather. The difference between the two predicted values is the monthly weather adjustment for billed sales.

Weather Used for Forecasting, Including the Test Period:

Normal values for daily HD and CD and for monthly HDD and CDD are computed from the 10 years of historical data starting in January 2015 and ending in December 2024. Daily normal values are computed using the "average by date" method. For example, for each weather variable, the historical data provides 10 values for January 1st, and these 10 values are averaged. The 10 values for January 2 are averaged. And this continues through to the 10 values for December 31st. These values provide a relatively smooth pattern from winter to summer and back to winter as the year proceeds.

The daily normal CD and HD values are added up for the calendar month and the resulting CDD and HDD sums are shown for the test period on tab P6-2. The daily normal CD and HD values are also summed across the days in each billing cycle and these sums are averaged across cycles. The resulting CDD and HDD sums for the billing months in the test period are shown on tab P6-3.

| | A |
|---|---|
| 1 | **Public Service Company of New Mexico** |
| 2 | **Schedule P-6** |
| 3 | **Weather Data** |
| 4 | **Base Period Ending 6/30/2026** |
| 5 | **Test Period Ending 9/30/2028** |
| 6 | **This schedule is sponsored by PNM Witness Hayat** |
| 7 | |
| 51 | Weather Used for Monthly Class Use Models: |
| 52 | For monthly use models, monthly HDD and CDD values for each billing month are combined across the temperature |
| 53 | base values using different weights for each weather sensitive class. The weights are calculated from regression |
| 54 | models using daily energy data from load research samples. These data clearly identify where warm and cold |
| 55 | weather start to matter for each class and the relative power of low, medium and high-powered degrees for each |
| 56 | class. The estimated weights are shown below. For example, for the residential class, warm weather starts to |
| 57 | matter at 60 degrees. The first five degrees (60 to 65) are low-power degrees with a weight of .188. Degrees from |
| 58 | 65 to 70 are medium-power degrees with a weight of .474. Finally degrees above 70 are high-powered degrees with |
| 59 | a weight of 1.00. The weather variables constructed with these weights are best described as multi-part |
| 60 | degree-day splines. Use of this type of variable is the simplest way to accurately represent the nonlinear |
| 61 | relationship between class sales and temperature for each of the customer classes. |

| 62 | | Heating Degrees | | | | Cooling Degrees | | | | |
|---|---|---|---|---|---|---|---|---|---|---|
| 63 | **Customer Class** | **HD60** | **HD55** | **HD50** | **HD45** | **CD55** | **CD60** | **CD65** | **CD70** | **CD75** |
| 64 | Residential (Res) | 0.285 | 0.707 | 0.707 | 1.000 | 0.000 | 0.188 | 0.474 | 1.000 | 1.000 |
| 65 | Small Power (SP) | 0.000 | 0.572 | 0.572 | 1.000 | 0.237 | 0.237 | 0.866 | 1.000 | 1.000 |
| 66 | General Power (GP) | 0.000 | 0.307 | 0.307 | 1.000 | 0.448 | 0.448 | 1.000 | 1.000 | 1.000 |
| 67 | Large Power (LP) | 0.000 | 0.000 | 0.000 | 1.000 | 1.000 | 1.000 | 1.000 | 1.000 | 1.000 |
| 68 | | | | | | | | | | |
| 69 | | | | | | | | | | |

| | A | B | C | D | E | F | G | H | I | J | K | L | M | N |
|---|---|---|---|---|---|---|---|---|---|---|---|---|---|---|
| 1 | **Public Service Company of** | | | | | | | | | | | | | |
| 2 | **New Mexico** | | | | | | | | | | | | | |
| 3 | **Schedule P-6, Tab P6-2** | | | | | | | | | | | | | |
| 4 | **Weather Data** | | | | | | | | | | | | | |
| 5 | **Monthly Weather Data for** | | | | | | | | | | | | | |
| 6 | **Calendar Months** | | | | | | | | | | | | | |
| 7 | **Base Period Ending 6/30/2026** | | | | | | | | | | | | | |
| 8 | **Test Period Ending 9/30/2028** | | | | | | | | | | | | | |
| 9 | **This schedule is sponsored by** | | | | | | | | | | | | | |
| 10 | **PNM Witness Hayat** | | | | | | | | | | | | | |
| 11 | | | | | | | | | | | | | | |
| 12 | Line # | Year | Month | Avg DB Temp | HDD60 | HDD55 | HDD50 | HDD45 | CDD55 | CDD60 | CDD65 | CDD70 | CDD75 | Note |
| 13 | 1 | 2016 | 7 | 81.39 | 0.00 | 0.00 | 0.00 | 0.00 | 820.34 | 665.34 | 510.34 | 355.66 | 205.49 | Historical Actual Weather |
| 14 | 2 | 2016 | 8 | 72.71 | 0.00 | 0.00 | 0.00 | 0.00 | 551.93 | 396.93 | 244.19 | 108.13 | 26.65 | Historical Actual Weather |
| 15 | 3 | 2016 | 9 | 69.60 | 4.06 | 0.39 | 0.00 | 0.00 | 440.95 | 294.19 | 158.53 | 54.36 | 7.91 | Historical Actual Weather |
| 16 | 4 | 2016 | 10 | 62.36 | 29.44 | 4.92 | 0.60 | 0.00 | 235.17 | 102.82 | 20.81 | 0.42 | 0.00 | Historical Actual Weather |
| 17 | 5 | 2016 | 11 | 47.72 | 372.11 | 232.55 | 127.48 | 60.91 | 11.92 | 1.08 | 0.13 | 0.00 | 0.00 | Historical Actual Weather |
| 18 | 6 | 2016 | 12 | 38.33 | 674.58 | 520.02 | 368.54 | 225.97 | 0.56 | 0.10 | 0.00 | 0.00 | 0.00 | Historical Actual Weather |
| 19 | 7 | 2017 | 1 | 38.93 | 656.05 | 501.21 | 347.27 | 204.49 | 0.17 | 0.00 | 0.00 | 0.00 | 0.00 | Historical Actual Weather |
| 20 | 8 | 2017 | 2 | 45.84 | 399.06 | 264.39 | 143.76 | 52.13 | 5.80 | 0.26 | 0.02 | 0.00 | 0.00 | Historical Actual Weather |
| 21 | 9 | 2017 | 3 | 54.52 | 201.26 | 97.87 | 41.55 | 13.76 | 81.85 | 29.03 | 1.74 | 0.00 | 0.00 | Historical Actual Weather |
| 22 | 10 | 2017 | 4 | 57.06 | 152.26 | 84.45 | 42.57 | 16.45 | 146.71 | 63.14 | 11.60 | 0.43 | 0.00 | Historical Actual Weather |
| 23 | 11 | 2017 | 5 | 64.75 | 34.42 | 8.62 | 1.16 | 0.00 | 313.03 | 182.73 | 76.78 | 14.97 | 1.36 | Historical Actual Weather |
| 24 | 12 | 2017 | 6 | 78.28 | 0.00 | 0.00 | 0.00 | 0.00 | 701.14 | 551.14 | 401.41 | 257.94 | 128.88 | Historical Actual Weather |
| 25 | 13 | 2017 | 7 | 78.61 | 0.00 | 0.00 | 0.00 | 0.00 | 734.00 | 579.00 | 424.00 | 269.37 | 122.40 | Historical Actual Weather |
| 26 | 14 | 2017 | 8 | 74.75 | 0.00 | 0.00 | 0.00 | 0.00 | 614.65 | 459.65 | 304.71 | 155.29 | 38.61 | Historical Actual Weather |
| 27 | 15 | 2017 | 9 | 70.51 | 9.23 | 0.88 | 0.00 | 0.00 | 468.89 | 326.57 | 200.52 | 90.05 | 16.07 | Historical Actual Weather |
| 28 | 16 | 2017 | 10 | 58.65 | 113.60 | 44.14 | 11.67 | 2.07 | 157.51 | 70.40 | 19.76 | 3.90 | 0.31 | Historical Actual Weather |
| 29 | 17 | 2017 | 11 | 51.89 | 247.81 | 120.85 | 47.38 | 14.40 | 25.39 | 1.49 | 0.13 | 0.00 | 0.00 | Historical Actual Weather |
| 30 | 18 | 2017 | 12 | 39.42 | 640.43 | 485.73 | 332.27 | 191.20 | 0.31 | 0.00 | 0.00 | 0.00 | 0.00 | Historical Actual Weather |
| 31 | 19 | 2018 | 1 | 38.06 | 682.94 | 527.94 | 373.46 | 222.90 | 0.00 | 0.00 | 0.00 | 0.00 | 0.00 | Historical Actual Weather |
| 32 | 20 | 2018 | 2 | 44.13 | 447.36 | 308.01 | 173.79 | 82.95 | 0.70 | 0.00 | 0.00 | 0.00 | 0.00 | Historical Actual Weather |
| 33 | 21 | 2018 | 3 | 50.06 | 317.32 | 187.20 | 93.30 | 33.24 | 32.07 | 6.32 | 0.50 | 0.00 | 0.00 | Historical Actual Weather |
| 34 | 22 | 2018 | 4 | 60.30 | 69.89 | 25.49 | 7.12 | 1.14 | 186.10 | 78.30 | 17.68 | 0.98 | 0.00 | Historical Actual Weather |
| 35 | 23 | 2018 | 5 | 70.69 | 10.04 | 2.59 | 0.52 | 0.00 | 491.63 | 343.78 | 205.01 | 87.21 | 14.00 | Historical Actual Weather |
| 36 | 24 | 2018 | 6 | 79.60 | 0.00 | 0.00 | 0.00 | 0.00 | 740.42 | 590.42 | 440.89 | 296.65 | 163.43 | Historical Actual Weather |
| 37 | 25 | 2018 | 7 | 78.78 | 0.00 | 0.00 | 0.00 | 0.00 | 739.52 | 584.52 | 429.52 | 275.06 | 130.16 | Historical Actual Weather |
| 38 | 26 | 2018 | 8 | 76.32 | 0.00 | 0.00 | 0.00 | 0.00 | 663.71 | 508.71 | 353.80 | 201.83 | 78.07 | Historical Actual Weather |
| 39 | 27 | 2018 | 9 | 71.11 | 0.35 | 0.00 | 0.00 | 0.00 | 486.10 | 336.37 | 191.66 | 74.10 | 16.70 | Historical Actual Weather |
| 40 | 28 | 2018 | 10 | 56.37 | 164.94 | 76.68 | 33.02 | 11.58 | 118.67 | 50.54 | 19.46 | 3.99 | 0.00 | Historical Actual Weather |
| 41 | 29 | 2018 | 11 | 42.89 | 516.09 | 367.52 | 228.31 | 109.75 | 1.50 | 0.00 | 0.00 | 0.00 | 0.00 | Historical Actual Weather |
| 42 | 30 | 2018 | 12 | 36.08 | 744.36 | 589.36 | 434.54 | 282.90 | 0.00 | 0.00 | 0.00 | 0.00 | 0.00 | Historical Actual Weather |
| 43 | 31 | 2019 | 1 | 35.39 | 766.21 | 611.21 | 456.41 | 303.38 | 0.00 | 0.00 | 0.00 | 0.00 | 0.00 | Historical Actual Weather |
| 44 | 32 | 2019 | 2 | 39.44 | 578.29 | 439.05 | 303.10 | 187.98 | 0.84 | 0.04 | 0.00 | 0.00 | 0.00 | Historical Actual Weather |
| 45 | 33 | 2019 | 3 | 49.75 | 331.50 | 198.07 | 89.71 | 32.42 | 33.08 | 10.86 | 0.89 | 0.00 | 0.00 | Historical Actual Weather |
| 46 | 34 | 2019 | 4 | 57.48 | 136.09 | 61.10 | 23.39 | 4.11 | 135.87 | 59.37 | 12.04 | 0.65 | 0.00 | Historical Actual Weather |
| 47 | 35 | 2019 | 5 | 61.67 | 60.34 | 21.33 | 6.43 | 1.00 | 229.89 | 112.27 | 32.96 | 3.61 | 0.02 | Historical Actual Weather |
| 48 | 36 | 2019 | 6 | 73.98 | 0.28 | 0.00 | 0.00 | 0.00 | 572.17 | 422.39 | 275.45 | 144.65 | 51.42 | Historical Actual Weather |
| 49 | 37 | 2019 | 7 | 79.64 | 0.00 | 0.00 | 0.00 | 0.00 | 766.71 | 611.71 | 456.71 | 303.16 | 159.72 | Historical Actual Weather |
| 50 | 38 | 2019 | 8 | 78.63 | 0.00 | 0.00 | 0.00 | 0.00 | 735.36 | 580.36 | 425.36 | 270.89 | 123.96 | Historical Actual Weather |
| 51 | 39 | 2019 | 9 | 72.35 | 0.17 | 0.00 | 0.00 | 0.00 | 523.15 | 373.28 | 227.12 | 106.94 | 32.15 | Historical Actual Weather |
| 52 | 40 | 2019 | 10 | 54.97 | 200.85 | 119.09 | 63.36 | 30.06 | 117.74 | 42.81 | 10.47 | 1.07 | 0.00 | Historical Actual Weather |
| 53 | 41 | 2019 | 11 | 43.39 | 500.94 | 352.39 | 215.54 | 106.02 | 1.62 | 0.11 | 0.00 | 0.00 | 0.00 | Historical Actual Weather |
| 54 | 42 | 2019 | 12 | 37.01 | 715.31 | 560.36 | 406.38 | 257.83 | 0.05 | 0.00 | 0.00 | 0.00 | 0.00 | Historical Actual Weather |
| 55 | 43 | 2020 | 1 | 37.52 | 699.96 | 545.06 | 390.62 | 238.89 | 0.10 | 0.00 | 0.00 | 0.00 | 0.00 | Historical Actual Weather |
| 56 | 44 | 2020 | 2 | 40.42 | 570.44 | 425.57 | 282.50 | 155.56 | 0.14 | 0.00 | 0.00 | 0.00 | 0.00 | Historical Actual Weather |
| 57 | 45 | 2020 | 3 | 50.63 | 294.30 | 150.81 | 46.76 | 7.55 | 12.93 | 0.97 | 0.08 | 0.00 | 0.00 | Historical Actual Weather |
| 58 | 46 | 2020 | 4 | 58.99 | 98.22 | 44.52 | 21.52 | 9.44 | 164.96 | 66.44 | 23.41 | 4.13 | 0.00 | Historical Actual Weather |
| 59 | 47 | 2020 | 5 | 70.16 | 1.98 | 0.21 | 0.00 | 0.00 | 473.29 | 319.68 | 175.75 | 68.00 | 12.12 | Historical Actual Weather |
| 60 | 48 | 2020 | 6 | 76.56 | 0.34 | 0.00 | 0.00 | 0.00 | 649.47 | 499.74 | 352.78 | 208.63 | 84.47 | Historical Actual Weather |
| 61 | 49 | 2020 | 7 | 79.59 | 0.00 | 0.00 | 0.00 | 0.00 | 764.99 | 609.99 | 454.99 | 301.22 | 168.98 | Historical Actual Weather |
| 62 | 50 | 2020 | 8 | 80.18 | 0.00 | 0.00 | 0.00 | 0.00 | 783.03 | 628.03 | 473.03 | 318.06 | 166.92 | Historical Actual Weather |
| 63 | 51 | 2020 | 9 | 68.60 | 35.17 | 19.78 | 9.69 | 3.25 | 429.67 | 294.71 | 172.28 | 74.85 | 22.83 | Historical Actual Weather |
| 64 | 52 | 2020 | 10 | 59.19 | 135.36 | 95.87 | 68.33 | 47.14 | 227.01 | 110.46 | 24.61 | 0.25 | 0.00 | Historical Actual Weather |
| 65 | 53 | 2020 | 11 | 48.66 | 345.49 | 219.09 | 126.32 | 57.92 | 27.23 | 2.83 | 0.01 | 0.00 | 0.00 | Historical Actual Weather |
| 66 | 54 | 2020 | 12 | 35.12 | 773.84 | 618.84 | 463.99 | 310.12 | 0.00 | 0.00 | 0.00 | 0.00 | 0.00 | Historical Actual Weather |
| 67 | 55 | 2021 | 1 | 36.68 | 725.64 | 570.64 | 415.71 | 263.08 | 0.00 | 0.00 | 0.00 | 0.00 | 0.00 | Historical Actual Weather |
| 68 | 56 | 2021 | 2 | 40.26 | 555.35 | 415.96 | 280.40 | 166.77 | 0.65 | 0.00 | 0.00 | 0.00 | 0.00 | Historical Actual Weather |
| 69 | 57 | 2021 | 3 | 47.59 | 388.42 | 243.75 | 122.35 | 45.93 | 11.96 | 1.22 | 0.11 | 0.00 | 0.00 | Historical Actual Weather |
| 70 | 58 | 2021 | 4 | 57.31 | 126.73 | 54.53 | 18.60 | 2.69 | 124.08 | 44.48 | 6.81 | 0.26 | 0.00 | Historical Actual Weather |
| 71 | 59 | 2021 | 5 | 67.36 | 15.07 | 2.52 | 0.20 | 0.00 | 388.30 | 245.04 | 120.26 | 32.22 | 2.19 | Historical Actual Weather |

| | A | B | C | D | E | F | G | H | I | J | K | L | M | N |
|---|---|---|---|---|---|---|---|---|---|---|---|---|---|---|
| 1 | **Public Service Company of** | | | | | | | | | | | | | |
| 2 | **New Mexico** | | | | | | | | | | | | | |
| 3 | **Schedule P-6, Tab P6-2** | | | | | | | | | | | | | |
| 4 | **Weather Data** | | | | | | | | | | | | | |
| 5 | **Monthly Weather Data for** | | | | | | | | | | | | | |
| 6 | **Calendar Months** | | | | | | | | | | | | | |
| 7 | **Base Period Ending 6/30/2026** | | | | | | | | | | | | | |
| 8 | **Test Period Ending 9/30/2028** | | | | | | | | | | | | | |
| 9 | **This schedule is sponsored by** | | | | | | | | | | | | | |
| 10 | **PNM Witness Hayat** | | | | | | | | | | | | | |
| 11 | | | | | | | | | | | | | | |
| 12 | Line # | Year | Month | Avg DB Temp | HDD60 | HDD55 | HDD50 | HDD45 | CDD55 | CDD60 | CDD65 | CDD70 | CDD75 | Note |
| 72 | 60 | 2021 | 6 | 77.64 | 0.29 | 0.00 | 0.00 | 0.00 | 681.73 | 531.96 | 386.98 | 257.70 | 144.51 | Historical Actual Weather |
| 73 | 61 | 2021 | 7 | 76.99 | 0.00 | 0.00 | 0.00 | 0.00 | 684.17 | 529.17 | 374.23 | 220.37 | 81.50 | Historical Actual Weather |
| 74 | 62 | 2021 | 8 | 75.95 | 0.00 | 0.00 | 0.00 | 0.00 | 651.42 | 496.42 | 341.42 | 188.08 | 60.10 | Historical Actual Weather |
| 75 | 63 | 2021 | 9 | 72.25 | 4.34 | 0.33 | 0.00 | 0.00 | 519.78 | 373.71 | 237.02 | 122.15 | 35.13 | Historical Actual Weather |
| 76 | 64 | 2021 | 10 | 58.05 | 113.03 | 40.48 | 7.93 | 1.03 | 135.31 | 51.18 | 9.65 | 0.43 | 0.00 | Historical Actual Weather |
| 77 | 65 | 2021 | 11 | 49.67 | 312.73 | 169.41 | 75.03 | 22.72 | 6.97 | 0.02 | 0.00 | 0.00 | 0.00 | Historical Actual Weather |
| 78 | 66 | 2021 | 12 | 41.41 | 579.38 | 425.22 | 273.47 | 144.59 | 0.97 | 0.06 | 0.00 | 0.00 | 0.00 | Historical Actual Weather |
| 79 | 67 | 2022 | 1 | 37.22 | 709.24 | 554.25 | 399.47 | 246.79 | 0.01 | 0.00 | 0.00 | 0.00 | 0.00 | Historical Actual Weather |
| 80 | 68 | 2022 | 2 | 36.93 | 649.23 | 509.23 | 370.16 | 239.77 | 0.00 | 0.00 | 0.00 | 0.00 | 0.00 | Historical Actual Weather |
| 81 | 69 | 2022 | 3 | 47.63 | 390.34 | 252.80 | 140.82 | 67.29 | 21.98 | 3.88 | 0.05 | 0.00 | 0.00 | Historical Actual Weather |
| 82 | 70 | 2022 | 4 | 60.14 | 78.05 | 24.28 | 7.82 | 1.38 | 179.42 | 81.59 | 20.86 | 1.11 | 0.03 | Historical Actual Weather |
| 83 | 71 | 2022 | 5 | 69.83 | 6.91 | 1.18 | 0.00 | 0.00 | 464.02 | 313.88 | 178.81 | 71.38 | 10.25 | Historical Actual Weather |
| 84 | 72 | 2022 | 6 | 75.26 | 0.33 | 0.00 | 0.00 | 0.00 | 610.59 | 460.85 | 314.26 | 183.60 | 85.92 | Historical Actual Weather |
| 85 | 73 | 2022 | 7 | 79.67 | 0.00 | 0.00 | 0.00 | 0.00 | 768.04 | 613.04 | 458.04 | 304.66 | 159.91 | Historical Actual Weather |
| 86 | 74 | 2022 | 8 | 75.17 | 0.00 | 0.00 | 0.00 | 0.00 | 628.09 | 473.09 | 318.62 | 173.48 | 55.07 | Historical Actual Weather |
| 87 | 75 | 2022 | 9 | 71.94 | 0.03 | 0.00 | 0.00 | 0.00 | 510.96 | 360.99 | 214.13 | 87.40 | 14.94 | Historical Actual Weather |
| 88 | 76 | 2022 | 10 | 55.79 | 164.36 | 76.55 | 25.82 | 4.64 | 101.01 | 31.89 | 4.65 | 0.07 | 0.00 | Historical Actual Weather |
| 89 | 77 | 2022 | 11 | 41.72 | 551.57 | 403.74 | 274.91 | 159.74 | 2.37 | 0.10 | 0.00 | 0.00 | 0.00 | Historical Actual Weather |
| 90 | 78 | 2022 | 12 | 38.29 | 676.34 | 521.59 | 368.64 | 226.25 | 0.27 | 0.00 | 0.00 | 0.00 | 0.00 | Historical Actual Weather |
| 91 | 79 | 2023 | 1 | 36.59 | 728.86 | 573.89 | 419.50 | 267.16 | 0.03 | 0.00 | 0.00 | 0.00 | 0.00 | Historical Actual Weather |
| 92 | 80 | 2023 | 2 | 38.73 | 598.20 | 458.40 | 320.14 | 188.49 | 0.21 | 0.00 | 0.00 | 0.00 | 0.00 | Historical Actual Weather |
| 93 | 81 | 2023 | 3 | 45.84 | 443.29 | 292.95 | 170.28 | 80.51 | 5.90 | 1.00 | 0.00 | 0.00 | 0.00 | Historical Actual Weather |
| 94 | 82 | 2023 | 4 | 56.34 | 151.21 | 69.15 | 30.26 | 11.51 | 108.70 | 38.93 | 6.01 | 0.13 | 0.00 | Historical Actual Weather |
| 95 | 83 | 2023 | 5 | 66.87 | 4.82 | 0.07 | 0.00 | 0.00 | 371.40 | 220.12 | 92.21 | 21.02 | 1.24 | Historical Actual Weather |
| 96 | 84 | 2023 | 6 | 75.15 | 0.90 | 0.00 | 0.00 | 0.00 | 608.46 | 459.16 | 313.20 | 177.08 | 82.34 | Historical Actual Weather |
| 97 | 85 | 2023 | 7 | 84.94 | 0.00 | 0.00 | 0.00 | 0.00 | 931.27 | 776.27 | 621.27 | 466.27 | 311.90 | Historical Actual Weather |
| 98 | 86 | 2023 | 8 | 79.05 | 0.00 | 0.00 | 0.00 | 0.00 | 747.95 | 592.95 | 437.95 | 283.78 | 139.73 | Historical Actual Weather |
| 99 | 87 | 2023 | 9 | 72.44 | 0.22 | 0.00 | 0.00 | 0.00 | 525.78 | 375.95 | 233.05 | 117.97 | 45.01 | Historical Actual Weather |
| 100 | 88 | 2023 | 10 | 60.87 | 77.54 | 44.27 | 26.59 | 11.86 | 227.91 | 104.69 | 26.35 | 4.43 | 0.19 | Historical Actual Weather |
| 101 | 89 | 2023 | 11 | 46.60 | 408.71 | 275.25 | 162.75 | 77.73 | 21.24 | 4.14 | 0.28 | 0.00 | 0.00 | Historical Actual Weather |
| 102 | 90 | 2023 | 12 | 39.14 | 649.33 | 494.41 | 339.86 | 188.86 | 0.08 | 0.00 | 0.00 | 0.00 | 0.00 | Historical Actual Weather |
| 103 | 91 | 2024 | 1 | 37.53 | 699.02 | 544.08 | 389.87 | 238.22 | 0.07 | 0.00 | 0.00 | 0.00 | 0.00 | Historical Actual Weather |
| 104 | 92 | 2024 | 2 | 43.83 | 471.64 | 329.37 | 195.61 | 87.71 | 3.21 | 0.36 | 0.00 | 0.00 | 0.00 | Historical Actual Weather |
| 105 | 93 | 2024 | 3 | 48.34 | 364.72 | 219.66 | 105.80 | 35.49 | 11.20 | 0.85 | 0.06 | 0.00 | 0.00 | Historical Actual Weather |
| 106 | 94 | 2024 | 4 | 57.31 | 131.79 | 64.29 | 24.39 | 7.43 | 133.95 | 50.13 | 10.29 | 0.36 | 0.00 | Historical Actual Weather |
| 107 | 95 | 2024 | 5 | 67.39 | 6.63 | 0.87 | 0.00 | 0.00 | 387.41 | 237.17 | 116.08 | 34.21 | 3.34 | Historical Actual Weather |
| 108 | 96 | 2024 | 6 | 78.65 | 0.00 | 0.00 | 0.00 | 0.00 | 711.89 | 561.89 | 412.33 | 266.99 | 130.89 | Historical Actual Weather |
| 109 | 97 | 2024 | 7 | 78.98 | 0.00 | 0.00 | 0.00 | 0.00 | 745.67 | 590.67 | 435.67 | 281.32 | 138.57 | Historical Actual Weather |
| 110 | 98 | 2024 | 8 | 79.20 | 0.00 | 0.00 | 0.00 | 0.00 | 752.70 | 597.70 | 442.70 | 289.80 | 154.95 | Historical Actual Weather |
| 111 | 99 | 2024 | 9 | 73.10 | 0.28 | 0.00 | 0.00 | 0.00 | 545.79 | 396.01 | 248.84 | 113.62 | 20.75 | Historical Actual Weather |
| 112 | 100 | 2024 | 10 | 64.68 | 43.40 | 17.61 | 6.03 | 0.80 | 319.93 | 189.27 | 84.75 | 18.12 | 0.31 | Historical Actual Weather |
| 113 | 101 | 2024 | 11 | 44.12 | 479.15 | 330.79 | 190.08 | 84.32 | 1.88 | 0.14 | 0.00 | 0.00 | 0.00 | Historical Actual Weather |
| 114 | 102 | 2024 | 12 | 41.59 | 573.35 | 418.35 | 264.04 | 122.89 | 0.00 | 0.00 | 0.00 | 0.00 | 0.00 | Historical Actual Weather |
| 115 | 103 | 2025 | 1 | 33.20 | 833.02 | 678.02 | 523.27 | 370.41 | 0.00 | 0.00 | 0.00 | 0.00 | 0.00 | Historical Actual Weather |
| 116 | 104 | 2025 | 2 | 48.02 | 338.68 | 203.11 | 97.03 | 37.86 | 5.14 | 0.49 | 0.00 | 0.00 | 0.00 | Historical Actual Weather |
| 117 | 105 | 2025 | 3 | 51.15 | 293.25 | 170.02 | 82.39 | 29.21 | 49.46 | 17.15 | 1.89 | 0.00 | 0.00 | Historical Actual Weather |
| 118 | 106 | 2025 | 4 | 58.64 | 143.84 | 85.45 | 44.56 | 17.37 | 195.49 | 103.09 | 33.84 | 2.94 | 0.02 | Historical Actual Weather |
| 119 | 107 | 2025 | 5 | 65.39 | 41.43 | 11.74 | 1.76 | 0.34 | 335.91 | 209.60 | 109.55 | 42.96 | 5.54 | Historical Actual Weather |
| 120 | 108 | 2025 | 6 | 77.44 | 0.17 | 0.00 | 0.00 | 0.00 | 676.00 | 526.13 | 379.04 | 240.06 | 123.79 | Historical Actual Weather |
| 121 | 109 | 2025 | 7 | 78.21 | 0.00 | 0.00 | 0.00 | 0.00 | 721.84 | 566.84 | 411.84 | 257.95 | 120.49 | Historical Actual Weather |
| 122 | 110 | 2025 | 8 | 78.98 | 0.00 | 0.00 | 0.00 | 0.00 | 746.69 | 591.69 | 436.76 | 284.04 | 139.60 | Historical Actual Weather |
| 123 | 111 | 2025 | 9 | 70.46 | 2.24 | 0.14 | 0.00 | 0.00 | 467.52 | 319.17 | 176.81 | 60.35 | 10.96 | Historical Actual Weather |
| 124 | 112 | 2025 | 10 | 62.21 | 50.56 | 15.04 | 2.58 | 0.49 | 240.15 | 118.82 | 40.72 | 6.42 | 0.21 | Historical Actual Weather |
| 125 | 113 | 2025 | 11 | 50.95 | 276.97 | 153.22 | 68.62 | 17.57 | 29.52 | 2.34 | 0.00 | 0.00 | 0.00 | Historical Actual Weather |
| 126 | 114 | 2025 | 12 | 44.63 | 479.45 | 325.57 | 181.55 | 83.25 | 1.17 | 0.00 | 0.00 | 0.00 | 0.00 | Historical Actual Weather |
| 127 | 115 | 2026 | 1 | 39.18 | 648.89 | 493.94 | 339.99 | 192.57 | 0.05 | 0.00 | 0.00 | 0.00 | 0.00 | Historical Actual Weather |
| 128 | 116 | 2026 | 2 | 47.73 | 347.65 | 221.60 | 116.81 | 43.66 | 15.86 | 1.42 | 0.08 | 0.00 | 0.00 | Historical Actual Weather |
| 129 | 117 | 2026 | 3 | 59.47 | 108.88 | 46.33 | 16.15 | 3.15 | 185.27 | 91.43 | 34.96 | 6.13 | 0.17 | Historical Actual Weather |
| 130 | 118 | 2026 | 4 | 60.38 | 53.40 | 12.47 | 1.51 | 0.13 | 175.32 | 63.55 | 9.33 | 0.46 | 0.00 | Historical Actual Weather |

| | A | B | C | D | E | F | G | H | I | J | K | L | M | N |
|---|---|---|---|---|---|---|---|---|---|---|---|---|---|---|
| 1 | **Public Service Company of** | | | | | | | | | | | | | |
| 2 | **New Mexico** | | | | | | | | | | | | | |
| 3 | **Schedule P-6, Tab P6-2** | | | | | | | | | | | | | |
| 4 | **Weather Data** | | | | | | | | | | | | | |
| 5 | **Monthly Weather Data for** | | | | | | | | | | | | | |
| 6 | **Calendar Months** | | | | | | | | | | | | | |
| 7 | **Base Period Ending 6/30/2026** | | | | | | | | | | | | | |
| 8 | **Test Period Ending 9/30/2028** | | | | | | | | | | | | | |
| 9 | **This schedule is sponsored by** | | | | | | | | | | | | | |
| 10 | **PNM Witness Hayat** | | | | | | | | | | | | | |
| 11 | | | | | | | | | | | | | | |
| 12 | Line # | Year | Month | Avg DB Temp | HDD60 | HDD55 | HDD50 | HDD45 | CDD55 | CDD60 | CDD65 | CDD70 | CDD75 | Note |
| 131 | 119 | 2026 | 5 | 67.66 | 27.46 | 7.87 | 1.13 | 0.02 | 402.72 | 266.81 | 148.75 | 54.44 | 6.50 | Historical Actual Weather |
| 132 | 120 | 2026 | 6 | 78.70 | 0.00 | 0.00 | 0.00 | 0.00 | 714.12 | 564.12 | 414.18 | 266.80 | 135.86 | Historical Actual Weather |
| 133 | 121 | 2026 | 7 | 79.36 | 0.00 | 0.00 | 0.00 | 0.00 | 757.91 | 602.91 | 447.96 | 294.77 | 153.82 | 10 Year Average Normal Weather |
| 134 | 122 | 2026 | 8 | 76.94 | 0.00 | 0.00 | 0.00 | 0.00 | 682.85 | 527.85 | 373.14 | 222.52 | 94.37 | 10 Year Average Normal Weather |
| 135 | 123 | 2026 | 9 | 71.45 | 5.39 | 2.14 | 0.97 | 0.33 | 498.25 | 351.32 | 211.58 | 93.87 | 22.39 | 10 Year Average Normal Weather |
| 136 | 124 | 2026 | 10 | 59.10 | 113.44 | 55.34 | 24.94 | 10.97 | 183.36 | 84.88 | 25.68 | 4.20 | 0.14 | 10 Year Average Normal Weather |
| 137 | 125 | 2026 | 11 | 46.13 | 419.87 | 279.03 | 163.81 | 77.67 | 10.50 | 1.00 | 0.06 | 0.00 | 0.00 | 10 Year Average Normal Weather |
| 138 | 126 | 2026 | 12 | 38.23 | 677.51 | 522.71 | 369.22 | 224.65 | 0.23 | 0.02 | 0.00 | 0.00 | 0.00 | 10 Year Average Normal Weather |
| 139 | 127 | 2027 | 1 | 37.04 | 714.57 | 559.61 | 405.32 | 255.24 | 0.04 | 0.00 | 0.00 | 0.00 | 0.00 | 10 Year Average Normal Weather |
| 140 | 128 | 2027 | 2 | 41.70 | 515.37 | 377.26 | 246.38 | 139.40 | 2.11 | 0.14 | 0.01 | 0.00 | 0.00 | 10 Year Average Normal Weather |
| 141 | 129 | 2027 | 3 | 49.82 | 325.32 | 191.37 | 91.79 | 34.43 | 28.79 | 7.06 | 0.43 | 0.00 | 0.00 | 10 Year Average Normal Weather |
| 142 | 130 | 2027 | 4 | 57.76 | 123.08 | 55.53 | 21.63 | 6.18 | 138.66 | 54.45 | 11.47 | 0.80 | 0.00 | 10 Year Average Normal Weather |
| 143 | 131 | 2027 | 5 | 66.46 | 24.57 | 6.93 | 1.67 | 0.25 | 364.79 | 226.42 | 111.00 | 34.93 | 4.54 | 10 Year Average Normal Weather |
| 144 | 132 | 2027 | 6 | 77.07 | 0.22 | 0.00 | 0.00 | 0.00 | 664.96 | 515.14 | 367.19 | 227.75 | 109.49 | 10 Year Average Normal Weather |
| 145 | 133 | 2027 | 7 | 79.36 | 0.00 | 0.00 | 0.00 | 0.00 | 757.91 | 602.91 | 447.96 | 294.77 | 153.82 | 10 Year Average Normal Weather |
| 146 | 134 | 2027 | 8 | 76.94 | 0.00 | 0.00 | 0.00 | 0.00 | 682.85 | 527.85 | 373.14 | 222.52 | 94.37 | 10 Year Average Normal Weather |
| 147 | 135 | 2027 | 9 | 71.45 | 5.39 | 2.14 | 0.97 | 0.33 | 498.25 | 351.32 | 211.58 | 93.87 | 22.39 | 10 Year Average Normal Weather |
| 148 | 136 | 2027 | 10 | 59.10 | 113.44 | 55.34 | 24.94 | 10.97 | 183.36 | 84.88 | 25.68 | 4.20 | 0.14 | 10 Year Average Normal Weather |
| 149 | 137 | 2027 | 11 | 46.13 | 419.87 | 279.03 | 163.81 | 77.67 | 10.50 | 1.00 | 0.06 | 0.00 | 0.00 | 10 Year Average Normal Weather |
| 150 | 138 | 2027 | 12 | 38.23 | 677.51 | 522.71 | 369.22 | 224.65 | 0.23 | 0.02 | 0.00 | 0.00 | 0.00 | 10 Year Average Normal Weather |
| 151 | 139 | 2028 | 1 | 37.04 | 714.57 | 559.61 | 405.32 | 255.24 | 0.04 | 0.00 | 0.00 | 0.00 | 0.00 | 10 Year Average Normal Weather |
| 152 | 140 | 2028 | 2 | 41.76 | 531.87 | 388.80 | 253.42 | 143.06 | 2.16 | 0.14 | 0.01 | 0.00 | 0.00 | 10 Year Average Normal Weather |
| 153 | 141 | 2028 | 3 | 49.82 | 325.32 | 191.37 | 91.79 | 34.43 | 28.79 | 7.06 | 0.43 | 0.00 | 0.00 | 10 Year Average Normal Weather |
| 154 | 142 | 2028 | 4 | 57.76 | 123.08 | 55.53 | 21.63 | 6.18 | 138.66 | 54.45 | 11.47 | 0.80 | 0.00 | 10 Year Average Normal Weather |
| 155 | 143 | 2028 | 5 | 66.46 | 24.57 | 6.93 | 1.67 | 0.25 | 364.79 | 226.42 | 111.00 | 34.93 | 4.54 | 10 Year Average Normal Weather |
| 156 | 144 | 2028 | 6 | 77.07 | 0.22 | 0.00 | 0.00 | 0.00 | 664.96 | 515.14 | 367.19 | 227.75 | 109.49 | 10 Year Average Normal Weather |
| 157 | 145 | 2028 | 7 | 79.36 | 0.00 | 0.00 | 0.00 | 0.00 | 757.91 | 602.91 | 447.96 | 294.77 | 153.82 | 10 Year Average Normal Weather |
| 158 | 146 | 2028 | 8 | 76.94 | 0.00 | 0.00 | 0.00 | 0.00 | 682.85 | 527.85 | 373.14 | 222.52 | 94.37 | 10 Year Average Normal Weather |
| 159 | 147 | 2028 | 9 | 71.45 | 5.39 | 2.14 | 0.97 | 0.33 | 498.25 | 351.32 | 211.58 | 93.87 | 22.39 | 10 Year Average Normal Weather |

| | A | B | C | D | E | F | G | H | I | J | K | L | M | N |
|---|---|---|---|---|---|---|---|---|---|---|---|---|---|---|
| 1 | **Public Service Company of** | | | | | | | | | | | | | |
| 2 | **New Mexico** | | | | | | | | | | | | | |
| 3 | **Schedule P-6, Tab P6-3** | | | | | | | | | | | | | |
| 4 | **Weather Data** | | | | | | | | | | | | | |
| 5 | **Monthly Weather Data for** | | | | | | | | | | | | | |
| 6 | **Billing Months (Calculated for** | | | | | | | | | | | | | |
| 7 | **days in the billing cycle)** | | | | | | | | | | | | | |
| 8 | **Base Period Ending 6/30/2026** | | | | | | | | | | | | | |
| 9 | **Test Period Ending 9/30/2028** | | | | | | | | | | | | | |
| 10 | **This schedule is sponsored by** | | | | | | | | | | | | | |
| 11 | **PNM Witness Hayat** | | | | | | | | | | | | | |
| 12 | | | | | | | | | | | | | | |
| 13 | Line # | Year | Month | Avg DB Temp | HDD60 | HDD55 | HDD50 | HDD45 | CDD55 | CDD60 | CDD65 | CDD70 | CDD75 | Note |
| 14 | 1 | 2016 | 7 | 79.90 | 0.03 | 0.00 | 0.00 | 0.00 | 730.60 | 584.44 | 438.51 | 294.05 | 158.32 | Historical Actual Weather |
| 15 | 2 | 2016 | 8 | 79.39 | 0.00 | 0.00 | 0.00 | 0.00 | 752.77 | 598.97 | 445.37 | 293.84 | 152.69 | Historical Actual Weather |
| 16 | 3 | 2016 | 9 | 71.86 | 0.00 | 0.00 | 0.00 | 0.00 | 519.85 | 366.51 | 215.55 | 84.84 | 18.36 | Historical Actual Weather |
| 17 | 4 | 2016 | 10 | 66.41 | 16.09 | 2.67 | 0.18 | 0.00 | 356.62 | 214.89 | 100.57 | 27.82 | 3.15 | Historical Actual Weather |
| 18 | 5 | 2016 | 11 | 59.34 | 88.37 | 33.38 | 9.29 | 2.14 | 164.31 | 68.09 | 11.74 | 0.21 | 0.00 | Historical Actual Weather |
| 19 | 6 | 2016 | 12 | 43.47 | 522.82 | 371.94 | 238.21 | 130.72 | 8.15 | 2.21 | 0.10 | 0.00 | 0.00 | Historical Actual Weather |
| 20 | 7 | 2017 | 1 | 38.93 | 685.23 | 523.72 | 364.77 | 218.24 | 0.49 | 0.07 | 0.00 | 0.00 | 0.00 | Historical Actual Weather |
| 21 | 8 | 2017 | 2 | 41.08 | 571.28 | 423.50 | 281.02 | 153.87 | 2.68 | 0.12 | 0.01 | 0.00 | 0.00 | Historical Actual Weather |
| 22 | 9 | 2017 | 3 | 48.67 | 361.47 | 230.63 | 125.08 | 50.31 | 33.49 | 9.64 | 0.51 | 0.00 | 0.00 | Historical Actual Weather |
| 23 | 10 | 2017 | 4 | 55.96 | 155.37 | 71.42 | 28.44 | 7.78 | 98.34 | 38.53 | 3.90 | 0.07 | 0.00 | Historical Actual Weather |
| 24 | 11 | 2017 | 5 | 60.09 | 98.63 | 49.53 | 23.70 | 9.89 | 204.78 | 100.95 | 30.08 | 3.65 | 0.07 | Historical Actual Weather |
| 25 | 12 | 2017 | 6 | 69.29 | 23.99 | 7.64 | 2.22 | 0.76 | 448.78 | 311.05 | 185.41 | 90.32 | 36.14 | Historical Actual Weather |
| 26 | 13 | 2017 | 7 | 79.51 | 0.00 | 0.00 | 0.00 | 0.00 | 751.82 | 598.96 | 446.26 | 295.60 | 153.13 | Historical Actual Weather |
| 27 | 14 | 2017 | 8 | 76.99 | 0.00 | 0.00 | 0.00 | 0.00 | 655.76 | 507.19 | 358.63 | 211.74 | 80.07 | Historical Actual Weather |
| 28 | 15 | 2017 | 9 | 74.39 | 0.03 | 0.00 | 0.00 | 0.00 | 593.52 | 441.16 | 289.15 | 143.17 | 31.68 | Historical Actual Weather |
| 29 | 16 | 2017 | 10 | 66.51 | 27.33 | 6.48 | 1.31 | 0.22 | 354.66 | 224.19 | 119.43 | 46.17 | 6.44 | Historical Actual Weather |
| 30 | 17 | 2017 | 11 | 56.09 | 153.24 | 61.12 | 19.16 | 4.46 | 93.74 | 30.91 | 7.19 | 1.23 | 0.09 | Historical Actual Weather |
| 31 | 18 | 2017 | 12 | 46.81 | 421.30 | 273.58 | 158.77 | 85.08 | 11.71 | 0.70 | 0.09 | 0.00 | 0.00 | Historical Actual Weather |
| 32 | 19 | 2018 | 1 | 38.97 | 680.54 | 519.40 | 359.00 | 204.71 | 0.06 | 0.00 | 0.00 | 0.00 | 0.00 | Historical Actual Weather |
| 33 | 20 | 2018 | 2 | 41.06 | 578.14 | 426.59 | 277.98 | 155.85 | 0.38 | 0.00 | 0.00 | 0.00 | 0.00 | Historical Actual Weather |
| 34 | 21 | 2018 | 3 | 45.10 | 453.27 | 308.07 | 178.18 | 84.99 | 7.00 | 1.27 | 0.09 | 0.00 | 0.00 | Historical Actual Weather |
| 35 | 22 | 2018 | 4 | 55.23 | 174.58 | 90.32 | 40.67 | 11.97 | 96.84 | 31.95 | 6.56 | 0.41 | 0.00 | Historical Actual Weather |
| 36 | 23 | 2018 | 5 | 63.79 | 48.29 | 16.77 | 4.34 | 0.61 | 275.88 | 159.62 | 73.10 | 26.06 | 4.17 | Historical Actual Weather |
| 37 | 24 | 2018 | 6 | 74.42 | 1.91 | 0.48 | 0.10 | 0.00 | 602.55 | 449.61 | 299.71 | 162.50 | 61.53 | Historical Actual Weather |
| 38 | 25 | 2018 | 7 | 79.79 | 0.00 | 0.00 | 0.00 | 0.00 | 756.56 | 604.42 | 452.44 | 303.46 | 161.58 | Historical Actual Weather |
| 39 | 26 | 2018 | 8 | 78.15 | 0.00 | 0.00 | 0.00 | 0.00 | 719.07 | 564.31 | 409.57 | 256.31 | 119.17 | Historical Actual Weather |
| 40 | 27 | 2018 | 9 | 74.11 | 0.02 | 0.00 | 0.00 | 0.00 | 589.82 | 436.26 | 283.89 | 142.86 | 45.00 | Historical Actual Weather |
| 41 | 28 | 2018 | 10 | 66.66 | 42.46 | 20.51 | 8.77 | 3.22 | 357.77 | 235.42 | 127.35 | 47.21 | 10.91 | Historical Actual Weather |
| 42 | 29 | 2018 | 11 | 51.42 | 281.85 | 165.03 | 88.47 | 39.07 | 53.61 | 16.09 | 5.81 | 1.02 | 0.00 | Historical Actual Weather |
| 43 | 30 | 2018 | 12 | 40.36 | 608.99 | 455.59 | 306.11 | 167.20 | 0.94 | 0.01 | 0.00 | 0.00 | 0.00 | Historical Actual Weather |
| 44 | 31 | 2019 | 1 | 34.53 | 834.11 | 671.02 | 508.06 | 347.77 | 0.00 | 0.00 | 0.00 | 0.00 | 0.00 | Historical Actual Weather |
| 45 | 32 | 2019 | 2 | 38.12 | 666.92 | 515.54 | 365.34 | 225.80 | 0.32 | 0.01 | 0.00 | 0.00 | 0.00 | Historical Actual Weather |
| 46 | 33 | 2019 | 3 | 43.76 | 498.35 | 351.83 | 220.83 | 126.47 | 6.91 | 1.06 | 0.05 | 0.00 | 0.00 | Historical Actual Weather |
| 47 | 34 | 2019 | 4 | 52.68 | 246.72 | 137.81 | 61.86 | 21.06 | 67.29 | 25.66 | 2.70 | 0.05 | 0.00 | Historical Actual Weather |
| 48 | 35 | 2019 | 5 | 59.96 | 86.83 | 36.00 | 12.49 | 2.10 | 182.34 | 85.36 | 21.81 | 1.68 | 0.01 | Historical Actual Weather |
| 49 | 36 | 2019 | 6 | 65.95 | 32.10 | 10.98 | 2.96 | 0.43 | 347.13 | 214.91 | 107.80 | 41.29 | 10.81 | Historical Actual Weather |
| 50 | 37 | 2019 | 7 | 76.84 | 0.10 | 0.00 | 0.00 | 0.00 | 667.55 | 515.49 | 364.40 | 220.21 | 100.14 | Historical Actual Weather |
| 51 | 38 | 2019 | 8 | 79.28 | 0.00 | 0.00 | 0.00 | 0.00 | 726.51 | 577.46 | 428.41 | 280.05 | 138.78 | Historical Actual Weather |
| 52 | 39 | 2019 | 9 | 77.55 | 0.02 | 0.00 | 0.00 | 0.00 | 692.33 | 539.49 | 387.35 | 240.33 | 106.34 | Historical Actual Weather |
| 53 | 40 | 2019 | 10 | 66.98 | 27.12 | 11.43 | 3.58 | 0.73 | 372.24 | 237.39 | 124.74 | 46.88 | 11.19 | Historical Actual Weather |
| 54 | 41 | 2019 | 11 | 50.28 | 315.29 | 198.73 | 105.92 | 42.42 | 53.13 | 16.34 | 3.74 | 0.48 | 0.01 | Historical Actual Weather |
| 55 | 42 | 2019 | 12 | 41.04 | 594.87 | 439.30 | 290.54 | 160.21 | 0.69 | 0.04 | 0.00 | 0.00 | 0.00 | Historical Actual Weather |
| 56 | 43 | 2020 | 1 | 35.77 | 781.70 | 621.04 | 461.00 | 304.25 | 0.06 | 0.00 | 0.00 | 0.00 | 0.00 | Historical Actual Weather |
| 57 | 44 | 2020 | 2 | 38.90 | 636.93 | 486.84 | 337.77 | 196.43 | 0.15 | 0.00 | 0.00 | 0.00 | 0.00 | Historical Actual Weather |
| 58 | 45 | 2020 | 3 | 44.84 | 454.79 | 308.28 | 178.37 | 86.67 | 2.85 | 0.20 | 0.01 | 0.00 | 0.00 | Historical Actual Weather |
| 59 | 46 | 2020 | 4 | 53.19 | 220.91 | 109.61 | 38.75 | 9.96 | 52.82 | 8.88 | 0.55 | 0.02 | 0.00 | Historical Actual Weather |
| 60 | 47 | 2020 | 5 | 64.06 | 49.32 | 22.60 | 10.75 | 4.67 | 289.28 | 168.52 | 80.39 | 23.40 | 1.62 | Historical Actual Weather |
| 61 | 48 | 2020 | 6 | 72.24 | 1.41 | 0.16 | 0.00 | 0.00 | 520.01 | 370.99 | 229.14 | 110.57 | 34.16 | Historical Actual Weather |
| 62 | 49 | 2020 | 7 | 78.88 | 0.15 | 0.00 | 0.00 | 0.00 | 716.77 | 567.36 | 419.14 | 272.08 | 135.73 | Historical Actual Weather |
| 63 | 50 | 2020 | 8 | 79.00 | 0.00 | 0.00 | 0.00 | 0.00 | 743.16 | 588.87 | 434.59 | 281.52 | 149.12 | Historical Actual Weather |
| 64 | 51 | 2020 | 9 | 76.42 | 17.00 | 10.65 | 5.43 | 1.84 | 667.65 | 521.08 | 377.40 | 242.65 | 124.71 | Historical Actual Weather |
| 65 | 52 | 2020 | 10 | 67.36 | 21.79 | 10.64 | 5.39 | 2.27 | 389.70 | 247.94 | 124.90 | 44.44 | 9.95 | Historical Actual Weather |
| 66 | 53 | 2020 | 11 | 54.88 | 215.99 | 140.79 | 91.46 | 56.07 | 137.30 | 57.75 | 10.81 | 0.44 | 0.03 | Historical Actual Weather |
| 67 | 54 | 2020 | 12 | 42.69 | 558.72 | 409.90 | 279.07 | 165.14 | 13.08 | 1.27 | 0.01 | 0.00 | 0.00 | Historical Actual Weather |
| 68 | 55 | 2021 | 1 | 35.66 | 782.87 | 622.63 | 462.56 | 304.03 | 0.00 | 0.00 | 0.00 | 0.00 | 0.00 | Historical Actual Weather |
| 69 | 56 | 2021 | 2 | 38.63 | 652.15 | 500.70 | 351.79 | 217.78 | 0.48 | 0.00 | 0.00 | 0.00 | 0.00 | Historical Actual Weather |
| 70 | 57 | 2021 | 3 | 42.89 | 512.30 | 366.18 | 229.95 | 124.92 | 3.20 | 0.38 | 0.00 | 0.00 | 0.00 | Historical Actual Weather |
| 71 | 58 | 2021 | 4 | 52.64 | 236.80 | 137.77 | 65.35 | 22.87 | 69.27 | 23.11 | 3.39 | 0.08 | 0.00 | Historical Actual Weather |
| 72 | 59 | 2021 | 5 | 60.21 | 96.34 | 40.59 | 14.45 | 1.97 | 197.64 | 102.31 | 38.62 | 7.16 | 0.32 | Historical Actual Weather |

| | A | B | C | D | E | F | G | H | I | J | K | L | M | N |
|---|---|---|---|---|---|---|---|---|---|---|---|---|---|---|
| 1 | **Public Service Company of** | | | | | | | | | | | | | |
| 2 | **New Mexico** | | | | | | | | | | | | | |
| 3 | **Schedule P-6, Tab P6-3** | | | | | | | | | | | | | |
| 4 | **Weather Data** | | | | | | | | | | | | | |
| 5 | **Monthly Weather Data for** | | | | | | | | | | | | | |
| 6 | **Billing Months (Calculated for** | | | | | | | | | | | | | |
| 7 | **days in the billing cycle)** | | | | | | | | | | | | | |
| 8 | **Base Period Ending 6/30/2026** | | | | | | | | | | | | | |
| 9 | **Test Period Ending 9/30/2028** | | | | | | | | | | | | | |
| 10 | **This schedule is sponsored by** | | | | | | | | | | | | | |
| 11 | **PNM Witness Hayat** | | | | | | | | | | | | | |
| 12 | | | | | | | | | | | | | | |
| 13 | Line # | Year | Month | Avg DB Temp | HDD60 | HDD55 | HDD50 | HDD45 | CDD55 | CDD60 | CDD65 | CDD70 | CDD75 | Note |
| 73 | 60 | 2021 | 6 | 72.01 | 7.09 | 1.13 | 0.14 | 0.00 | 525.60 | 377.79 | 240.14 | 126.35 | 56.87 | Historical Actual Weather |
| 74 | 61 | 2021 | 7 | 77.34 | 0.30 | 0.00 | 0.00 | 0.00 | 686.39 | 533.53 | 384.83 | 247.41 | 122.78 | Historical Actual Weather |
| 75 | 62 | 2021 | 8 | 76.48 | 0.01 | 0.00 | 0.00 | 0.00 | 662.07 | 508.51 | 355.16 | 204.18 | 74.65 | Historical Actual Weather |
| 76 | 63 | 2021 | 9 | 75.58 | 0.00 | 0.00 | 0.00 | 0.00 | 635.30 | 481.49 | 327.93 | 177.86 | 53.14 | Historical Actual Weather |
| 77 | 64 | 2021 | 10 | 66.21 | 37.27 | 11.81 | 2.13 | 0.26 | 351.02 | 225.13 | 122.91 | 58.01 | 15.66 | Historical Actual Weather |
| 78 | 65 | 2021 | 11 | 55.45 | 156.27 | 57.81 | 14.78 | 3.19 | 69.93 | 20.94 | 3.50 | 0.14 | 0.00 | Historical Actual Weather |
| 79 | 66 | 2021 | 12 | 46.02 | 448.29 | 292.45 | 158.96 | 66.13 | 3.62 | 0.03 | 0.00 | 0.00 | 0.00 | Historical Actual Weather |
| 80 | 67 | 2022 | 1 | 39.24 | 664.43 | 505.87 | 348.92 | 203.88 | 0.82 | 0.05 | 0.00 | 0.00 | 0.00 | Historical Actual Weather |
| 81 | 68 | 2022 | 2 | 36.43 | 721.44 | 569.07 | 417.05 | 269.75 | 0.00 | 0.00 | 0.00 | 0.00 | 0.00 | Historical Actual Weather |
| 82 | 69 | 2022 | 3 | 42.20 | 555.07 | 404.68 | 267.70 | 152.97 | 5.23 | 0.69 | 0.01 | 0.00 | 0.00 | Historical Actual Weather |
| 83 | 70 | 2022 | 4 | 53.77 | 222.24 | 124.74 | 61.90 | 26.81 | 86.52 | 30.32 | 6.03 | 0.32 | 0.01 | Historical Actual Weather |
| 84 | 71 | 2022 | 5 | 65.06 | 34.49 | 9.98 | 3.27 | 0.60 | 304.16 | 182.29 | 84.09 | 24.08 | 2.46 | Historical Actual Weather |
| 85 | 72 | 2022 | 6 | 73.23 | 3.79 | 0.78 | 0.00 | 0.00 | 561.04 | 410.70 | 267.79 | 143.68 | 54.30 | Historical Actual Weather |
| 86 | 73 | 2022 | 7 | 76.60 | 0.30 | 0.00 | 0.00 | 0.00 | 655.04 | 504.32 | 356.32 | 220.61 | 107.41 | Historical Actual Weather |
| 87 | 74 | 2022 | 8 | 78.42 | 0.00 | 0.00 | 0.00 | 0.00 | 714.59 | 562.68 | 410.90 | 262.81 | 127.85 | Historical Actual Weather |
| 88 | 75 | 2022 | 9 | 73.79 | 0.00 | 0.00 | 0.00 | 0.00 | 578.08 | 424.98 | 272.99 | 133.36 | 29.80 | Historical Actual Weather |
| 89 | 76 | 2022 | 10 | 65.88 | 34.72 | 10.54 | 2.47 | 0.44 | 338.05 | 211.66 | 110.24 | 36.84 | 4.29 | Historical Actual Weather |
| 90 | 77 | 2022 | 11 | 50.20 | 314.86 | 191.94 | 103.86 | 48.87 | 43.02 | 11.64 | 1.05 | 0.01 | 0.00 | Historical Actual Weather |
| 91 | 78 | 2022 | 12 | 39.84 | 635.95 | 479.97 | 330.49 | 193.42 | 1.00 | 0.03 | 0.00 | 0.00 | 0.00 | Historical Actual Weather |
| 92 | 79 | 2023 | 1 | 37.32 | 714.99 | 558.13 | 402.12 | 249.39 | 0.05 | 0.00 | 0.00 | 0.00 | 0.00 | Historical Actual Weather |
| 93 | 80 | 2023 | 2 | 36.47 | 686.23 | 541.09 | 396.41 | 254.73 | 0.11 | 0.00 | 0.00 | 0.00 | 0.00 | Historical Actual Weather |
| 94 | 81 | 2023 | 3 | 42.72 | 516.89 | 370.72 | 239.39 | 129.53 | 2.90 | 0.37 | 0.00 | 0.00 | 0.00 | Historical Actual Weather |
| 95 | 82 | 2023 | 4 | 49.53 | 342.08 | 218.17 | 125.93 | 59.53 | 47.47 | 16.44 | 1.77 | 0.05 | 0.00 | Historical Actual Weather |
| 96 | 83 | 2023 | 5 | 60.99 | 70.27 | 25.70 | 8.87 | 2.39 | 202.14 | 98.73 | 28.18 | 1.49 | 0.02 | Historical Actual Weather |
| 97 | 84 | 2023 | 6 | 69.32 | 3.50 | 0.07 | 0.00 | 0.00 | 445.58 | 294.00 | 157.81 | 56.12 | 12.09 | Historical Actual Weather |
| 98 | 85 | 2023 | 7 | 80.70 | 0.11 | 0.00 | 0.00 | 0.00 | 786.66 | 634.36 | 482.88 | 334.31 | 200.14 | Historical Actual Weather |
| 99 | 86 | 2023 | 8 | 82.90 | 0.00 | 0.00 | 0.00 | 0.00 | 849.25 | 697.59 | 545.92 | 394.75 | 247.39 | Historical Actual Weather |
| 100 | 87 | 2023 | 9 | 76.90 | 0.12 | 0.00 | 0.00 | 0.00 | 675.94 | 522.23 | 371.81 | 231.85 | 106.96 | Historical Actual Weather |
| 101 | 88 | 2023 | 10 | 68.32 | 6.66 | 1.09 | 0.11 | 0.00 | 391.84 | 251.17 | 129.32 | 50.32 | 13.73 | Historical Actual Weather |
| 102 | 89 | 2023 | 11 | 56.50 | 160.10 | 93.14 | 48.27 | 17.44 | 137.48 | 56.51 | 12.50 | 1.79 | 0.08 | Historical Actual Weather |
| 103 | 90 | 2023 | 12 | 43.05 | 534.22 | 385.46 | 246.86 | 125.50 | 9.50 | 1.81 | 0.13 | 0.00 | 0.00 | Historical Actual Weather |
| 104 | 91 | 2024 | 1 | 37.14 | 733.04 | 573.30 | 413.87 | 256.73 | 0.03 | 0.00 | 0.00 | 0.00 | 0.00 | Historical Actual Weather |
| 105 | 92 | 2024 | 2 | 40.03 | 582.40 | 437.27 | 293.24 | 156.50 | 0.11 | 0.00 | 0.00 | 0.00 | 0.00 | Historical Actual Weather |
| 106 | 93 | 2024 | 3 | 46.03 | 430.64 | 281.23 | 149.65 | 60.66 | 4.23 | 0.36 | 0.00 | 0.00 | 0.00 | Historical Actual Weather |
| 107 | 94 | 2024 | 4 | 50.50 | 295.43 | 175.47 | 86.12 | 28.81 | 40.31 | 10.53 | 1.64 | 0.05 | 0.00 | Historical Actual Weather |
| 108 | 95 | 2024 | 5 | 61.03 | 62.82 | 24.44 | 6.72 | 1.66 | 209.45 | 94.19 | 26.37 | 2.28 | 0.11 | Historical Actual Weather |
| 109 | 96 | 2024 | 6 | 72.23 | 4.16 | 0.80 | 0.03 | 0.00 | 534.96 | 383.57 | 245.72 | 129.05 | 51.68 | Historical Actual Weather |
| 110 | 97 | 2024 | 7 | 78.60 | 0.00 | 0.00 | 0.00 | 0.00 | 719.53 | 567.62 | 415.91 | 266.21 | 128.27 | Historical Actual Weather |
| 111 | 98 | 2024 | 8 | 79.89 | 0.00 | 0.00 | 0.00 | 0.00 | 762.15 | 609.53 | 456.91 | 304.87 | 160.71 | Historical Actual Weather |
| 112 | 99 | 2024 | 9 | 76.51 | 0.04 | 0.00 | 0.00 | 0.00 | 669.36 | 514.39 | 359.94 | 210.45 | 93.25 | Historical Actual Weather |
| 113 | 100 | 2024 | 10 | 71.35 | 3.91 | 0.53 | 0.09 | 0.00 | 497.50 | 349.42 | 208.05 | 84.07 | 14.16 | Historical Actual Weather |
| 114 | 101 | 2024 | 11 | 56.57 | 198.23 | 126.83 | 70.99 | 31.30 | 174.41 | 94.33 | 36.17 | 7.43 | 0.63 | Historical Actual Weather |
| 115 | 102 | 2024 | 12 | 43.10 | 517.76 | 366.70 | 219.25 | 98.82 | 1.64 | 0.25 | 0.02 | 0.01 | 0.00 | Historical Actual Weather |
| 116 | 103 | 2025 | 1 | 39.11 | 677.05 | 515.65 | 355.09 | 206.46 | 0.04 | 0.00 | 0.00 | 0.00 | 0.00 | Historical Actual Weather |
| 117 | 104 | 2025 | 2 | 38.31 | 654.55 | 505.80 | 369.89 | 253.85 | 1.84 | 0.27 | 0.00 | 0.00 | 0.00 | Historical Actual Weather |
| 118 | 105 | 2025 | 3 | 48.03 | 359.72 | 218.00 | 106.17 | 38.95 | 8.69 | 1.59 | 0.16 | 0.00 | 0.00 | Historical Actual Weather |
| 119 | 106 | 2025 | 4 | 53.79 | 233.33 | 136.15 | 68.71 | 26.28 | 99.41 | 46.72 | 12.76 | 1.12 | 0.01 | Historical Actual Weather |
| 120 | 107 | 2025 | 5 | 60.90 | 85.85 | 41.13 | 18.46 | 7.43 | 220.09 | 113.12 | 39.22 | 7.42 | 0.41 | Historical Actual Weather |
| 121 | 108 | 2025 | 6 | 70.60 | 16.09 | 4.29 | 0.51 | 0.10 | 487.72 | 345.00 | 215.93 | 112.16 | 42.25 | Historical Actual Weather |
| 122 | 109 | 2025 | 7 | 78.42 | 0.04 | 0.00 | 0.00 | 0.00 | 706.38 | 556.17 | 406.97 | 260.77 | 134.26 | Historical Actual Weather |
| 123 | 110 | 2025 | 8 | 79.08 | 0.00 | 0.00 | 0.00 | 0.00 | 727.43 | 576.96 | 426.48 | 276.68 | 137.04 | Historical Actual Weather |
| 124 | 111 | 2025 | 9 | 76.11 | 0.10 | 0.00 | 0.00 | 0.00 | 648.58 | 495.81 | 344.29 | 199.90 | 81.27 | Historical Actual Weather |
| 125 | 112 | 2025 | 10 | 68.36 | 5.59 | 0.83 | 0.03 | 0.00 | 404.52 | 258.77 | 127.16 | 34.09 | 5.30 | Historical Actual Weather |
| 126 | 113 | 2025 | 11 | 58.80 | 98.33 | 34.06 | 8.23 | 1.34 | 150.24 | 60.09 | 17.51 | 2.59 | 0.07 | Historical Actual Weather |
| 127 | 114 | 2025 | 12 | 47.09 | 409.17 | 263.92 | 142.00 | 55.59 | 12.91 | 0.84 | 0.00 | 0.00 | 0.00 | Historical Actual Weather |
| 128 | 115 | 2026 | 1 | 43.82 | 527.85 | 366.80 | 214.77 | 102.11 | 1.13 | 0.00 | 0.00 | 0.00 | 0.00 | Historical Actual Weather |
| 129 | 116 | 2026 | 2 | 41.22 | 565.77 | 416.63 | 273.97 | 148.11 | 0.66 | 0.01 | 0.00 | 0.00 | 0.00 | Historical Actual Weather |
| 130 | 117 | 2026 | 3 | 51.65 | 260.49 | 154.74 | 80.46 | 32.30 | 55.55 | 14.41 | 3.85 | 0.30 | 0.01 | Historical Actual Weather |
| 131 | 118 | 2026 | 4 | 60.75 | 70.84 | 24.24 | 6.84 | 1.28 | 189.65 | 91.55 | 32.85 | 5.85 | 0.16 | Historical Actual Weather |

| | A | B | C | D | E | F | G | H | I | J | K | L | M | N |
|---|---|---|---|---|---|---|---|---|---|---|---|---|---|---|
| 1 | **Public Service Company of** | | | | | | | | | | | | | |
| 2 | **New Mexico** | | | | | | | | | | | | | |
| 3 | **Schedule P-6, Tab P6-3** | | | | | | | | | | | | | |
| 4 | **Weather Data** | | | | | | | | | | | | | |
| 5 | **Monthly Weather Data for** | | | | | | | | | | | | | |
| 6 | **Billing Months (Calculated for** | | | | | | | | | | | | | |
| 7 | **days in the billing cycle)** | | | | | | | | | | | | | |
| 8 | **Base Period Ending 6/30/2026** | | | | | | | | | | | | | |
| 9 | **Test Period Ending 9/30/2028** | | | | | | | | | | | | | |
| 10 | **This schedule is sponsored by** | | | | | | | | | | | | | |
| 11 | **PNM Witness Hayat** | | | | | | | | | | | | | |
| 12 | | | | | | | | | | | | | | |
| 13 | Line # | Year | Month | Avg DB Temp | HDD60 | HDD55 | HDD50 | HDD45 | CDD55 | CDD60 | CDD65 | CDD70 | CDD75 | Note |
| 132 | 119 | 2026 | 5 | 62.25 | 49.66 | 13.23 | 1.83 | 0.11 | 236.47 | 118.26 | 45.48 | 14.86 | 2.10 | Historical Actual Weather |
| 133 | 120 | 2026 | 6 | 71.88 | 7.68 | 1.74 | 0.23 | 0.00 | 524.64 | 376.28 | 237.81 | 117.17 | 38.38 | Historical Actual Weather |
| 134 | 121 | 2026 | 7 | 78.28 | 0.12 | 0.00 | 0.00 | 0.00 | 707.91 | 556.57 | 406.45 | 261.85 | 132.79 | 10 Year Average Normal Weather |
| 135 | 122 | 2026 | 8 | 78.77 | 0.00 | 0.00 | 0.00 | 0.00 | 728.33 | 575.71 | 423.22 | 272.66 | 135.76 | 10 Year Average Normal Weather |
| 136 | 123 | 2026 | 9 | 75.48 | 1.73 | 1.07 | 0.54 | 0.18 | 634.59 | 481.20 | 328.95 | 184.94 | 70.76 | 10 Year Average Normal Weather |
| 137 | 124 | 2026 | 10 | 67.83 | 21.24 | 7.12 | 2.15 | 0.64 | 401.76 | 262.33 | 142.37 | 55.27 | 11.04 | 10 Year Average Normal Weather |
| 138 | 125 | 2026 | 11 | 54.78 | 204.17 | 114.27 | 57.63 | 24.56 | 106.93 | 43.93 | 11.67 | 1.73 | 0.10 | 10 Year Average Normal Weather |
| 139 | 126 | 2026 | 12 | 42.88 | 544.88 | 391.26 | 251.05 | 133.96 | 5.31 | 0.66 | 0.04 | 0.00 | 0.00 | 10 Year Average Normal Weather |
| 140 | 127 | 2027 | 1 | 37.07 | 732.36 | 573.45 | 415.46 | 263.44 | 0.16 | 0.01 | 0.00 | 0.00 | 0.00 | 10 Year Average Normal Weather |
| 141 | 128 | 2027 | 2 | 39.03 | 630.94 | 481.81 | 335.56 | 201.95 | 0.69 | 0.03 | 0.00 | 0.00 | 0.00 | 10 Year Average Normal Weather |
| 142 | 129 | 2027 | 3 | 44.71 | 449.74 | 310.15 | 188.36 | 98.71 | 7.52 | 1.16 | 0.05 | 0.00 | 0.00 | 10 Year Average Normal Weather |
| 143 | 130 | 2027 | 4 | 52.63 | 231.63 | 129.43 | 60.63 | 21.96 | 60.58 | 18.57 | 2.20 | 0.07 | 0.00 | 10 Year Average Normal Weather |
| 144 | 131 | 2027 | 5 | 60.58 | 87.89 | 37.38 | 13.45 | 3.53 | 208.93 | 105.26 | 37.52 | 8.15 | 0.77 | 10 Year Average Normal Weather |
| 145 | 132 | 2027 | 6 | 70.03 | 14.64 | 3.98 | 0.89 | 0.18 | 469.73 | 325.73 | 196.06 | 94.17 | 33.53 | 10 Year Average Normal Weather |
| 146 | 133 | 2027 | 7 | 78.28 | 0.12 | 0.00 | 0.00 | 0.00 | 707.91 | 556.57 | 406.45 | 261.85 | 132.79 | 10 Year Average Normal Weather |
| 147 | 134 | 2027 | 8 | 78.77 | 0.00 | 0.00 | 0.00 | 0.00 | 728.33 | 575.71 | 423.22 | 272.66 | 135.76 | 10 Year Average Normal Weather |
| 148 | 135 | 2027 | 9 | 75.48 | 1.73 | 1.07 | 0.54 | 0.18 | 634.59 | 481.20 | 328.95 | 184.94 | 70.76 | 10 Year Average Normal Weather |
| 149 | 136 | 2027 | 10 | 67.83 | 21.24 | 7.12 | 2.15 | 0.64 | 401.76 | 262.33 | 142.37 | 55.27 | 11.04 | 10 Year Average Normal Weather |
| 150 | 137 | 2027 | 11 | 54.78 | 204.17 | 114.27 | 57.63 | 24.56 | 106.93 | 43.93 | 11.67 | 1.73 | 0.10 | 10 Year Average Normal Weather |
| 151 | 138 | 2027 | 12 | 42.88 | 544.88 | 391.26 | 251.05 | 133.96 | 5.31 | 0.66 | 0.04 | 0.00 | 0.00 | 10 Year Average Normal Weather |
| 152 | 139 | 2028 | 1 | 37.07 | 732.36 | 573.45 | 415.46 | 263.44 | 0.16 | 0.01 | 0.00 | 0.00 | 0.00 | 10 Year Average Normal Weather |
| 153 | 140 | 2028 | 2 | 39.03 | 630.94 | 481.81 | 335.56 | 201.95 | 0.69 | 0.03 | 0.00 | 0.00 | 0.00 | 10 Year Average Normal Weather |
| 154 | 141 | 2028 | 3 | 44.67 | 464.66 | 320.59 | 194.74 | 102.03 | 7.56 | 1.16 | 0.05 | 0.00 | 0.00 | 10 Year Average Normal Weather |
| 155 | 142 | 2028 | 4 | 52.60 | 233.20 | 130.53 | 61.30 | 22.31 | 60.59 | 18.57 | 2.20 | 0.07 | 0.00 | 10 Year Average Normal Weather |
| 156 | 143 | 2028 | 5 | 60.58 | 87.89 | 37.38 | 13.45 | 3.53 | 208.93 | 105.26 | 37.52 | 8.15 | 0.77 | 10 Year Average Normal Weather |
| 157 | 144 | 2028 | 6 | 70.03 | 14.64 | 3.98 | 0.89 | 0.18 | 469.73 | 325.73 | 196.06 | 94.17 | 33.53 | 10 Year Average Normal Weather |
| 158 | 145 | 2028 | 7 | 78.28 | 0.12 | 0.00 | 0.00 | 0.00 | 707.91 | 556.57 | 406.45 | 261.85 | 132.79 | 10 Year Average Normal Weather |
| 159 | 146 | 2028 | 8 | 78.77 | 0.00 | 0.00 | 0.00 | 0.00 | 728.33 | 575.71 | 423.22 | 272.66 | 135.76 | 10 Year Average Normal Weather |
| 160 | 147 | 2028 | 9 | 75.48 | 1.73 | 1.07 | 0.54 | 0.18 | 634.59 | 481.20 | 328.95 | 184.94 | 70.76 | 10 Year Average Normal Weather |

# PNM Schedule P-7

Power plant maintenance information

| | A | B | C | D | E | F | G |
|---|---|---|---|---|---|---|---|
| 1 | **Public Service Company Of New Mexico** | | | | | | |
| 2 | **Schedule P-7(a)** | | | | | | |
| 3 | **Power Plant Maintenance** | | | | | | |
| 4 | **Four Years Prior To Test Period (and** | | | | | | |
| 5 | **Five Years Beyond Base Period and** | | | | | | |
| 6 | **Test Period) Ending 9/30/2028** | | | | | | |
| 7 | **This schedule is sponsored by** | | | | | | |
| 8 | **PNM Witness Gutierrez** | | | | | | |
| 9 | | | | | | | |
| 10 | **Description** | **San Juan Station** | **Four Corners Station** | **Palo Verde Station** | **Afton Station** | **Reeves Station** | **Luna Station** |
| 11 | Jan 2023 | 64,556 | 903,739 | 363,080 | 484,555 | 220,321 | 150,015 |
| 12 | Feb 2023 | 4,319 | 668,200 | 660,300 | 551,457 | 401,450 | 147,642 |
| 13 | Mar 2023 | (60,358) | 635,946 | 578,815 | 1,095,636 | 614,836 | 183,328 |
| 14 | Apr 2023 | 21,663 | 982,342 | 2,948,936 | 580,480 | 286,637 | 206,225 |
| 15 | May 2023 | (6,060) | 1,256,226 | 1,207,938 | 630,043 | 352,281 | 157,826 |
| 16 | Jun 2023 | (48) | 366,759 | 234,557 | 338,816 | 350,916 | 244,757 |
| 17 | Jul 2023 | - | 535,029 | 387,246 | 512,676 | 15,000 | 201,892 |
| 18 | Aug 2023 | (0) | 826,576 | 496,217 | 534,373 | 673,340 | 193,070 |
| 19 | Sep 2023 | - | 279,542 | 431,808 | 585,865 | 656,861 | 19,646 |
| 20 | Oct 2023 | 43 | 516,336 | 852,713 | 550,767 | 682,508 | 401,615 |
| 21 | Nov 2023 | - | 389,275 | 423,814 | 593,028 | 705,121 | 160,888 |
| 22 | Dec 2023 | - | 502,553 | 310,223 | 1,409,024 | 448,823 | 310,837 |
| 23 | **Jan 2023 - Dec 2023 Total** | **24,114** | **7,862,523** | **8,895,646** | **7,866,719** | **5,408,094** | **2,377,741** |
| 24 | | | | | | | |
| 25 | Jan 2024 | - | 517,131 | 576,473 | 352,685 | 340,273 | 55 |
| 26 | Feb 2024 | - | 495,418 | 850,679 | 448,901 | 216,947 | - |
| 27 | Mar 2024 | - | 892,057 | 885,865 | 813,423 | 362,691 | - |
| 28 | Apr 2024 | - | 838,864 | 3,245,948 | 534,481 | 554,529 | - |
| 29 | May 2024 | - | 710,319 | 1,126,993 | 1,232,170 | 230,672 | - |
| 30 | Jun 2024 | - | 520,858 | 427,343 | 889,596 | 325,415 | - |
| 31 | Jul 2024 | - | 647,844 | 560,874 | 911,136 | 706,622 | - |
| 32 | Aug 2024 | - | 518,767 | 761,801 | 795,446 | 603,808 | - |
| 33 | Sep 2024 | - | 629,809 | 289,495 | 650,987 | (1,014,840) | - |
| 34 | Oct 2024 | - | 1,135,538 | 2,633,434 | 694,048 | 700,872 | - |
| 35 | Nov 2024 | - | 1,435,500 | 791,897 | 76,988 | 234,982 | 11,517 |
| 36 | Dec 2024 | - | 1,469,271 | 483,085 | (475,818) | 364,747 | (17,278) |
| 37 | **Jan 2024 - Dec 2024 Total** | **-** | **9,811,378** | **12,633,886** | **6,924,043** | **3,626,719** | **(5,706)** |

| | A | B | C | D | E | F | G |
|---|---|---|---|---|---|---|---|
| 1 | **Public Service Company Of New Mexico** | | | | | | |
| 2 | **Schedule P-7(a)** | | | | | | |
| 3 | **Power Plant Maintenance** | | | | | | |
| 4 | **Four Years Prior To Test Period (and** | | | | | | |
| 5 | **Five Years Beyond Base Period and** | | | | | | |
| 6 | **Test Period) Ending 9/30/2028** | | | | | | |
| 7 | **This schedule is sponsored by** | | | | | | |
| 8 | **PNM Witness Gutierrez** | | | | | | |
| 9 | | | | | | | |
| 10 | **Description** | **San Juan Station** | **Four Corners Station** | **Palo Verde Station** | **Afton Station** | **Reeves Station** | **Luna Station** |
| 38 | | | | | | | |
| 39 | Jan 2025 | - | 844,851 | 595,150 | 418,427 | 615,732 | - |
| 40 | Feb 2025 | - | 1,938,055 | 596,037 | 875,471 | 171,062 | - |
| 41 | Mar 2025 | - | 1,347,286 | 711,369 | 1,345,559 | 392,062 | - |
| 42 | Apr 2025 | - | 1,010,214 | 1,035,833 | 218,260 | 1,138,681 | - |
| 43 | May 2025 | - | 637,138 | 565,965 | 492,221 | 1,525,679 | - |
| 44 | Jun 2025 | - | 478,516 | 504,265 | 876,168 | 1,385,898 | - |
| 45 | Jul 2025 | - | 500,192 | 578,873 | 419,286 | 851,252 | - |
| 46 | Aug 2025 | - | 853,968 | 763,732 | 435,130 | 37,487 | - |
| 47 | Sep 2025 | - | 173,338 | 544,989 | 525,535 | 265,847 | - |
| 48 | Oct 2025 | - | 546,253 | 2,092,791 | 682,199 | 478,239 | - |
| 49 | Nov 2025 | - | 590,118 | 1,896,621 | 253,072 | 314,589 | - |
| 50 | Dec 2025 | - | 613,281 | 854,303 | 561,264 | 222,725 | - |
| 51 | **Jan 2025 - Dec 2025 Total** | **-** | **9,533,210** | **10,739,929** | **7,102,592** | **7,399,253** | **-** |
| 52 | | | | | | | |

| | A | B | C | D | E | F | G |
|---|---|---|---|---|---|---|---|
| 1 | **Public Service Company Of New Mexico** | | | | | | |
| 2 | **Schedule P-7(a)** | | | | | | |
| 3 | **Power Plant Maintenance** | | | | | | |
| 4 | **Four Years Prior To Test Period (and** | | | | | | |
| 5 | **Five Years Beyond Base Period and** | | | | | | |
| 6 | **Test Period) Ending 9/30/2028** | | | | | | |
| 7 | **This schedule is sponsored by** | | | | | | |
| 8 | **PNM Witness Gutierrez** | | | | | | |
| 9 | | | | | | | |
| 10 | **Description** | **San Juan Station** | **Four Corners Station** | **Palo Verde Station** | **Afton Station** | **Reeves Station** | **Luna Station** |
| 53 | Jul 2025 | - | 500,192 | 578,873 | 419,286 | 851,252 | - |
| 54 | Aug 2025 | - | 853,968 | 763,732 | 435,130 | 37,487 | - |
| 55 | Sep 2025 | - | 173,338 | 544,989 | 525,535 | 265,847 | - |
| 56 | Oct 2025 | - | 546,253 | 2,092,791 | 682,199 | 478,239 | - |
| 57 | Nov 2025 | - | 590,118 | 1,896,621 | 253,072 | 314,589 | - |
| 58 | Dec 2025 | - | 613,281 | 854,303 | 561,264 | 222,725 | - |
| 59 | Jan 2026 | - | 559,888 | 752,988 | 393,311 | 286,033 | - |
| 60 | Feb 2026 | - | 489,332 | 811,713 | 798,586 | 413,207 | - |
| 61 | Mar 2026 | - | 1,076,253 | 1,330,987 | 544,063 | 305,362 | - |
| 62 | Apr 2026 | - | 719,891 | 3,103,650 | 662,392 | 350,773 | 78 |
| 63 | May 2026 | - | 912,656 | 742,353 | 366,932 | 250,569 | - |
| 64 | Jun 2026 | - | 575,545 | 557,686 | 184,407 | 567,553 | - |
| 65 | **Base Period Total** | **-** | **7,610,715** | **14,030,687** | **5,826,175** | **4,343,636** | **78** |

| | A | B | C | D | E | F | G |
|---|---|---|---|---|---|---|---|
| 1 | **Public Service Company Of New Mexico** | | | | | | |
| 2 | **Schedule P-7(a)** | | | | | | |
| 3 | **Power Plant Maintenance** | | | | | | |
| 4 | **Four Years Prior To Test Period (and** | | | | | | |
| 5 | **Five Years Beyond Base Period and** | | | | | | |
| 6 | **Test Period) Ending 9/30/2028** | | | | | | |
| 7 | **This schedule is sponsored by** | | | | | | |
| 8 | **PNM Witness Gutierrez** | | | | | | |
| 9 | | | | | | | |
| 10 | **Description** | **San Juan Station** | **Four Corners Station** | **Palo Verde Station** | **Afton Station** | **Reeves Station** | **Luna Station** |
| 66 | | | | | | | |
| 67 | Jul 2026 | - | 515,198 | 596,239 | 431,865 | 876,790 | - |
| 68 | Aug 2026 | - | 879,587 | 786,644 | 448,184 | 38,612 | - |
| 69 | Sep 2026 | - | 178,538 | 561,338 | 541,301 | 273,822 | - |
| 70 | Oct 2026 | - | 562,640 | 2,155,575 | 702,665 | 492,586 | - |
| 71 | Nov 2026 | - | 607,822 | 1,953,520 | 260,664 | 324,027 | - |
| 72 | Dec 2026 | - | 631,679 | 879,932 | 578,102 | 229,407 | - |
| 73 | Jan 2027 | - | 576,685 | 775,578 | 405,110 | 294,614 | - |
| 74 | Feb 2027 | - | 504,011 | 836,065 | 822,544 | 425,603 | - |
| 75 | Mar 2027 | - | 1,108,541 | 1,370,916 | 560,385 | 314,523 | - |
| 76 | Apr 2027 | - | 741,488 | 3,196,759 | 682,264 | 361,296 | 81 |
| 77 | May 2027 | - | 940,035 | 764,624 | 377,940 | 258,086 | - |
| 78 | Jun 2027 | - | 592,811 | 574,417 | 189,939 | 584,579 | - |
| 79 | Jul 2027 | - | 530,653 | 614,126 | 444,821 | 903,093 | - |
| 80 | Aug 2027 | - | 905,975 | 810,244 | 461,629 | 39,770 | - |
| 81 | Sep 2027 | - | 183,895 | 578,179 | 557,540 | 282,037 | - |
| 82 | **Linkage Total** | **-** | **9,459,559** | **16,454,156** | **7,464,950** | **5,698,846** | **81** |
| 83 | | | | | | | |

| | A | B | C | D | E | F | G |
|---|---|---|---|---|---|---|---|
| 1 | **Public Service Company Of New Mexico** | | | | | | |
| 2 | **Schedule P-7(a)** | | | | | | |
| 3 | **Power Plant Maintenance** | | | | | | |
| 4 | **Four Years Prior To Test Period (and** | | | | | | |
| 5 | **Five Years Beyond Base Period and** | | | | | | |
| 6 | **Test Period) Ending 9/30/2028** | | | | | | |
| 7 | **This schedule is sponsored by** | | | | | | |
| 8 | **PNM Witness Gutierrez** | | | | | | |
| 9 | | | | | | | |
| 10 | **Description** | **San Juan Station** | **Four Corners Station** | **Palo Verde Station** | **Afton Station** | **Reeves Station** | **Luna Station** |
| 84 | Oct 2027 | - | 579,520 | 2,220,242 | 723,745 | 507,364 | - |
| 85 | Nov 2027 | - | 626,056 | 2,012,126 | 268,484 | 333,748 | - |
| 86 | Dec 2027 | - | 650,630 | 906,330 | 595,445 | 236,289 | - |
| 87 | Jan 2028 | - | 593,985 | 798,845 | 417,263 | 303,453 | - |
| 88 | Feb 2028 | - | 519,132 | 861,147 | 847,220 | 438,371 | - |
| 89 | Mar 2028 | - | 1,141,797 | 1,412,044 | 577,197 | 323,959 | - |
| 90 | Apr 2028 | - | 763,733 | 3,292,662 | 702,732 | 372,135 | 83 |
| 91 | May 2028 | - | 968,236 | 787,563 | 389,278 | 265,828 | - |
| 92 | Jun 2028 | - | 610,595 | 591,649 | 195,637 | 602,117 | - |
| 93 | Jul 2028 | - | 546,573 | 632,550 | 458,166 | 930,186 | - |
| 94 | Aug 2028 | - | 933,154 | 834,551 | 475,478 | 40,963 | - |
| 95 | Sep 2028 | - | 189,411 | 595,524 | 574,266 | 290,498 | - |
| 96 | **Test Period Total** | **-** | **8,122,823** | **14,945,232** | **6,224,909** | **4,644,911** | **83** |
| 97 | | | | | | | |
| 98 | Jan 2028 | - | 593,985 | 798,845 | 417,263 | 303,453 | - |
| 99 | Feb 2028 | - | 519,132 | 861,147 | 847,220 | 438,371 | - |
| 100 | Mar 2028 | - | 1,141,797 | 1,412,044 | 577,197 | 323,959 | - |
| 101 | Apr 2028 | - | 763,733 | 3,292,662 | 702,732 | 372,135 | 83 |
| 102 | May 2028 | - | 968,236 | 787,563 | 389,278 | 265,828 | - |
| 103 | Jun 2028 | - | 610,595 | 591,649 | 195,637 | 602,117 | - |
| 104 | Jul 2028 | - | 546,573 | 632,550 | 458,166 | 930,186 | - |
| 105 | Aug 2028 | - | 933,154 | 834,551 | 475,478 | 40,963 | - |
| 106 | Sep 2028 | - | 189,411 | 595,524 | 574,266 | 290,498 | - |
| 107 | Oct 2028 | - | 596,905 | 2,286,849 | 745,457 | 522,584 | - |
| 108 | Nov 2028 | - | 644,838 | 2,072,490 | 276,538 | 343,760 | - |
| 109 | Dec 2028 | - | 670,148 | 933,520 | 613,308 | 243,378 | - |
| 110 | **Jan 2028 - Dec 2028 Total** | **-** | **8,178,509** | **15,099,393** | **6,272,539** | **4,677,233** | **83** |

| | A | B | C | D | E | F | G |
|---|---|---|---|---|---|---|---|
| 1 | **Public Service Company Of New Mexico** | | | | | | |
| 2 | **Schedule P-7(a)** | | | | | | |
| 3 | **Power Plant Maintenance** | | | | | | |
| 4 | **Four Years Prior To Test Period (and** | | | | | | |
| 5 | **Five Years Beyond Base Period and** | | | | | | |
| 6 | **Test Period) Ending 9/30/2028** | | | | | | |
| 7 | **This schedule is sponsored by** | | | | | | |
| 8 | **PNM Witness Gutierrez** | | | | | | |
| 9 | | | | | | | |
| 10 | **Description** | **San Juan Station** | **Four Corners Station** | **Palo Verde Station** | **Afton Station** | **Reeves Station** | **Luna Station** |
| 111 | | | | | | | |
| 112 | Jan 2029 | - | 611,805 | 822,811 | 429,781 | 312,556 | - |
| 113 | Feb 2029 | - | 534,706 | 886,981 | 872,636 | 451,522 | - |
| 114 | Mar 2029 | - | 1,176,051 | 1,454,405 | 594,513 | 333,678 | - |
| 115 | Apr 2029 | - | 786,645 | 3,391,442 | 723,813 | 383,299 | 86 |
| 116 | May 2029 | - | 997,283 | 811,189 | 400,956 | 273,803 | - |
| 117 | Jun 2029 | - | 628,913 | 609,399 | 201,506 | 620,180 | - |
| 118 | Jul 2029 | - | 562,970 | 651,527 | 471,911 | 958,092 | - |
| 119 | Aug 2029 | - | 961,149 | 859,587 | 489,742 | 42,192 | - |
| 120 | Sep 2029 | - | 195,094 | 613,390 | 591,494 | 299,213 | - |
| 121 | Oct 2029 | - | 614,812 | 2,355,455 | 767,821 | 538,262 | - |
| 122 | Nov 2029 | - | 664,183 | 2,134,664 | 284,834 | 354,073 | - |
| 123 | Dec 2029 | - | 690,253 | 961,525 | 631,707 | 250,679 | - |
| 124 | **Jan 2029 - Dec 2029 Total** | **-** | **8,423,864** | **15,552,375** | **6,460,715** | **4,817,550** | **86** |
| 125 | | | | | | | |
| 126 | Jan 2030 | - | 630,159 | 847,495 | 442,675 | 321,933 | - |
| 127 | Feb 2030 | - | 550,747 | 913,590 | 898,816 | 465,068 | - |
| 128 | Mar 2030 | - | 1,211,333 | 1,498,037 | 612,348 | 343,688 | - |
| 129 | Apr 2030 | - | 810,244 | 3,493,185 | 745,528 | 394,798 | 88 |
| 130 | May 2030 | - | 1,027,202 | 835,525 | 412,985 | 282,017 | - |
| 131 | Jun 2030 | - | 647,781 | 627,681 | 207,551 | 638,786 | - |
| 132 | Jul 2030 | - | 579,859 | 671,072 | 486,068 | 986,834 | - |
| 133 | Aug 2030 | - | 989,983 | 885,375 | 504,435 | 43,458 | - |
| 134 | Sep 2030 | - | 200,947 | 631,791 | 609,239 | 308,190 | - |
| 135 | Oct 2030 | - | 633,257 | 2,426,118 | 790,855 | 554,410 | - |
| 136 | Nov 2030 | - | 684,109 | 2,198,704 | 293,379 | 364,695 | - |
| 137 | Dec 2030 | - | 710,960 | 990,371 | 650,659 | 258,200 | - |
| 138 | **Jan 2030 - Dec 2030 Total** | **-** | **8,676,580** | **16,018,946** | **6,654,537** | **4,962,076** | **88** |

| | A | B | C | D | E | F | G |
|---|---|---|---|---|---|---|---|
| 1 | **Public Service Company Of New Mexico** | | | | | | |
| 2 | **Schedule P-7(a)** | | | | | | |
| 3 | **Power Plant Maintenance** | | | | | | |
| 4 | **Four Years Prior To Test Period (and** | | | | | | |
| 5 | **Five Years Beyond Base Period and** | | | | | | |
| 6 | **Test Period) Ending 9/30/2028** | | | | | | |
| 7 | **This schedule is sponsored by** | | | | | | |
| 8 | **PNM Witness Gutierrez** | | | | | | |
| 9 | | | | | | | |
| 10 | **Description** | **San Juan Station** | **Four Corners Station** | **Palo Verde Station** | **Afton Station** | **Reeves Station** | **Luna Station** |
| 139 | | | | | | | |
| 140 | Jan 2031 | - | 649,064 | 872,920 | 455,955 | 331,591 | - |
| 141 | Feb 2031 | - | 567,269 | 940,998 | 925,780 | 479,020 | - |
| 142 | Mar 2031 | - | 1,247,673 | 1,542,979 | 630,718 | 353,999 | - |
| 143 | Apr 2031 | - | 834,551 | 3,597,981 | 767,894 | 406,642 | 91 |
| 144 | May 2031 | - | 1,058,018 | 860,591 | 425,374 | 290,478 | - |
| 145 | Jun 2031 | - | 667,214 | 646,511 | 213,778 | 657,949 | - |
| 146 | Jul 2031 | - | 597,255 | 691,205 | 500,650 | 1,016,439 | - |
| 147 | Aug 2031 | - | 1,019,683 | 911,936 | 519,568 | 44,762 | - |
| 148 | Sep 2031 | - | 206,975 | 650,745 | 627,516 | 317,435 | - |
| 149 | Oct 2031 | - | 652,254 | 2,498,902 | 814,581 | 571,042 | - |
| 150 | Nov 2031 | - | 704,632 | 2,264,665 | 302,181 | 375,636 | - |
| 151 | Dec 2031 | - | 732,289 | 1,020,082 | 670,178 | 265,946 | - |
| 152 | **Jan 2031 - Dec 2031 Total** | **-** | **8,936,878** | **16,499,514** | **6,854,173** | **5,110,939** | **91** |

| | A | H | I | J | K | L | M | N |
|---|---|---|---|---|---|---|---|---|
| 1 | **Public Service Company Of New Mexico** | | | | | | | |
| 2 | **Schedule P-7(a)** | | | | | | | |
| 3 | **Power Plant Maintenance** | | | | | | | |
| 4 | **Four Years Prior To Test Period (and** | | | | | | | |
| 5 | **Five Years Beyond Base Period and** | | | | | | | |
| 6 | **Test Period) Ending 9/30/2028** | | | | | | | |
| 7 | **This schedule is sponsored by** | | | | | | | |
| 8 | **PNM Witness Gutierrez** | | | | | | | |
| 9 | | | | | | | | |
| 10 | **Description** | **Lordsburg Station** | **Rio Bravo** | **La Luz** | **Renewables** | **Other** | **Total** | **Reference** |
| 11 | Jan 2023 | 83,124 | 78,487 | 13,410 | - | 92,816 | 2,454,102 | |
| 12 | Feb 2023 | 64,439 | 113,013 | 35,836 | 7,789 | 17,852 | 2,672,296 | |
| 13 | Mar 2023 | 162,410 | 236,934 | 66,093 | 324,165 | 282,177 | 4,119,981 | |
| 14 | Apr 2023 | 78,898 | 152,495 | 17,185 | 300,884 | (1,403) | 5,574,343 | |
| 15 | May 2023 | 54,769 | (5,472) | 31,719 | - | 31,446 | 3,710,715 | |
| 16 | Jun 2023 | 124,019 | 111,438 | 21,163 | 323,407 | 1,378,294 | 3,494,077 | |
| 17 | Jul 2023 | 93,290 | 159,337 | 43,705 | 992 | 14,723 | 1,963,890 | |
| 18 | Aug 2023 | 128,933 | 139,039 | 85,461 | - | 128,185 | 3,205,194 | |
| 19 | Sep 2023 | 1,807 | 207,768 | 196,890 | 323,407 | 447,620 | 3,151,214 | |
| 20 | Oct 2023 | 132,463 | 152,165 | 34,687 | 992 | 30,929 | 3,355,217 | |
| 21 | Nov 2023 | 86,263 | 319,766 | 94,115 | 66,648 | 33,221 | 2,872,138 | |
| 22 | Dec 2023 | 165,034 | 127,359 | 65,099 | 323,896 | 551,453 | 4,214,301 | |
| 23 | **Jan 2023 - Dec 2023 Total** | **1,175,448** | **1,792,326** | **705,362** | **1,672,180** | **3,007,316** | **40,787,470** | |
| 24 | | | | | | | | |
| 25 | Jan 2024 | 156,000 | 49,592 | 52,369 | - | 67,982 | 2,112,560 | |
| 26 | Feb 2024 | 115,198 | 55,124 | 90,423 | - | 20,200 | 2,292,890 | |
| 27 | Mar 2024 | 79,650 | 101,651 | 7,334 | 330,293 | (125,036) | 3,347,930 | |
| 28 | Apr 2024 | 112,154 | 139,435 | 33,918 | 996 | 27,836 | 5,488,160 | |
| 29 | May 2024 | 91,224 | 109,302 | 52,939 | - | 29,387 | 3,583,007 | |
| 30 | Jun 2024 | 86,194 | 101,618 | 11,403 | 427,156 | 13,565 | 2,803,148 | |
| 31 | Jul 2024 | 92,167 | 118,916 | 22,323 | (33,824) | 32,726 | 3,058,786 | |
| 32 | Aug 2024 | 88,821 | 132,398 | 37,288 | - | (102,665) | 2,835,664 | |
| 33 | Sep 2024 | 93,991 | 113,668 | 20,994 | 487,096 | 7,864 | 1,279,065 | |
| 34 | Oct 2024 | 173,104 | 129,990 | 76,934 | 887 | 46,810 | 5,591,617 | |
| 35 | Nov 2024 | 132,673 | 52,664 | 29,360 | - | (13,256) | 2,752,326 | |
| 36 | Dec 2024 | 282,005 | 73,653 | (914) | 581,647 | 21,774 | 2,782,173 | |
| 37 | **Jan 2024 - Dec 2024 Total** | **1,503,182** | **1,178,013** | **434,373** | **1,794,252** | **27,186** | **37,927,326** | |

| | A | H | I | J | K | L | M | N |
|---|---|---|---|---|---|---|---|---|
| 1 | **Public Service Company Of New Mexico** | | | | | | | |
| 2 | **Schedule P-7(a)** | | | | | | | |
| 3 | **Power Plant Maintenance** | | | | | | | |
| 4 | **Four Years Prior To Test Period (and** | | | | | | | |
| 5 | **Five Years Beyond Base Period and** | | | | | | | |
| 6 | **Test Period) Ending 9/30/2028** | | | | | | | |
| 7 | **This schedule is sponsored by** | | | | | | | |
| 8 | **PNM Witness Gutierrez** | | | | | | | |
| 9 | | | | | | | | |
| 10 | **Description** | **Lordsburg Station** | **Rio Bravo** | **La Luz** | **Renewables** | **Other** | **Total** | **Reference** |
| 38 | | | | | | | | |
| 39 | Jan 2025 | 97,967 | 221,377 | 41,739 | (213,985) | (44,314) | 2,576,946 | |
| 40 | Feb 2025 | 83,983 | 83,695 | 59,010 | 536,386 | 2,225 | 4,345,925 | |
| 41 | Mar 2025 | 97,976 | 106,216 | 74,580 | 686,762 | 8,473 | 4,770,283 | |
| 42 | Apr 2025 | 87,109 | 94,464 | 61,606 | 51,473 | 32,477 | 3,730,116 | |
| 43 | May 2025 | 258,558 | 57,434 | 20,262 | 46,740 | 16,705 | 3,620,702 | |
| 44 | Jun 2025 | 98,167 | 105,340 | (12,762) | 663,400 | 43,711 | 4,142,703 | |
| 45 | Jul 2025 | 118,630 | 73,944 | 33,549 | 51,266 | 66,452 | 2,693,444 | |
| 46 | Aug 2025 | 105,517 | 128,817 | 46,344 | 56,756 | (161,070) | 2,266,681 | |
| 47 | Sep 2025 | 107,180 | 101,289 | 10,893 | 754,873 | 26,334 | 2,510,278 | |
| 48 | Oct 2025 | 261,702 | 220,747 | 17,134 | 253,986 | 34,877 | 4,587,927 | |
| 49 | Nov 2025 | 91,130 | 581,688 | 50,491 | 36,763 | (24,031) | 3,790,443 | |
| 50 | Dec 2025 | 200,646 | 135,800 | 19,636 | 567,859 | 32,524 | 3,208,037 | |
| 51 | **Jan 2025 - Dec 2025 Total** | **1,608,564** | **1,910,812** | **422,483** | **3,492,279** | **34,363** | **42,243,484** | |
| 52 | | | | | | | | |

| | A | H | I | J | K | L | M | N |
|---|---|---|---|---|---|---|---|---|
| 1 | **Public Service Company Of New Mexico** | | | | | | | |
| 2 | **Schedule P-7(a)** | | | | | | | |
| 3 | **Power Plant Maintenance** | | | | | | | |
| 4 | **Four Years Prior To Test Period (and** | | | | | | | |
| 5 | **Five Years Beyond Base Period and** | | | | | | | |
| 6 | **Test Period) Ending 9/30/2028** | | | | | | | |
| 7 | **This schedule is sponsored by** | | | | | | | |
| 8 | **PNM Witness Gutierrez** | | | | | | | |
| 9 | | | | | | | | |
| 10 | **Description** | **Lordsburg Station** | **Rio Bravo** | **La Luz** | **Renewables** | **Other** | **Total** | **Reference** |
| 53 | Jul 2025 | 118,630 | 73,944 | 33,549 | 51,266 | 66,452 | 2,693,444 | |
| 54 | Aug 2025 | 105,517 | 128,817 | 46,344 | 56,756 | (161,070) | 2,266,681 | |
| 55 | Sep 2025 | 107,180 | 101,289 | 10,893 | 754,873 | 26,334 | 2,510,278 | |
| 56 | Oct 2025 | 261,702 | 220,747 | 17,134 | 253,986 | 34,877 | 4,587,927 | |
| 57 | Nov 2025 | 91,130 | 581,688 | 50,491 | 36,763 | (24,031) | 3,790,443 | |
| 58 | Dec 2025 | 200,646 | 135,800 | 19,636 | 567,859 | 32,524 | 3,208,037 | |
| 59 | Jan 2026 | 86,445 | 125,835 | 22,481 | 255,117 | (68,176) | 2,413,923 | |
| 60 | Feb 2026 | 69,248 | 151,555 | 112,692 | 100,095 | 721 | 2,947,148 | |
| 61 | Mar 2026 | 156,215 | 361,490 | 30,288 | 778,495 | 29,076 | 4,612,230 | |
| 62 | Apr 2026 | 204,753 | 370,953 | 27,624 | 36,464 | 31,210 | 5,507,789 | |
| 63 | May 2026 | 82,821 | 16,197 | 34,608 | 35,086 | 1,651 | 2,442,872 | |
| 64 | Jun 2026 | 235,593 | 169,251 | 8,491 | 701,228 | 82,451 | 3,082,204 | |
| 65 | **Base Period Total** | **1,719,879** | **2,437,567** | **414,231** | **3,627,988** | **52,019** | **40,062,975** | |

| | A | H | I | J | K | L | M | N |
|---|---|---|---|---|---|---|---|---|
| 1 | **Public Service Company Of New Mexico** | | | | | | | |
| 2 | **Schedule P-7(a)** | | | | | | | |
| 3 | **Power Plant Maintenance** | | | | | | | |
| 4 | **Four Years Prior To Test Period (and** | | | | | | | |
| 5 | **Five Years Beyond Base Period and** | | | | | | | |
| 6 | **Test Period) Ending 9/30/2028** | | | | | | | |
| 7 | **This schedule is sponsored by** | | | | | | | |
| 8 | **PNM Witness Gutierrez** | | | | | | | |
| 9 | | | | | | | | |
| 10 | **Description** | **Lordsburg Station** | **Rio Bravo** | **La Luz** | **Renewables** | **Other** | **Total** | **Reference** |
| 66 | | | | | | | | |
| 67 | Jul 2026 | 122,189 | 76,162 | 34,555 | 52,804 | 68,446 | 2,774,247 | |
| 68 | Aug 2026 | 108,682 | 132,682 | 47,735 | 58,459 | (165,903) | 2,334,682 | |
| 69 | Sep 2026 | 110,396 | 104,328 | 11,220 | 777,519 | 27,124 | 2,585,587 | |
| 70 | Oct 2026 | 269,553 | 227,369 | 17,648 | 261,605 | 35,923 | 4,725,564 | |
| 71 | Nov 2026 | 93,864 | 599,139 | 52,006 | 37,866 | (24,752) | 3,904,156 | |
| 72 | Dec 2026 | 206,665 | 139,874 | 20,225 | 584,895 | 33,500 | 3,304,278 | |
| 73 | Jan 2027 | 89,038 | 129,610 | 23,156 | 262,771 | (70,221) | 2,486,340 | |
| 74 | Feb 2027 | 71,325 | 156,102 | 116,073 | 103,098 | 742 | 3,035,563 | |
| 75 | Mar 2027 | 160,901 | 372,335 | 31,196 | 801,850 | 29,948 | 4,750,597 | |
| 76 | Apr 2027 | 210,896 | 382,082 | 28,453 | 37,558 | 32,146 | 5,673,023 | |
| 77 | May 2027 | 85,306 | 16,683 | 35,646 | 36,138 | 1,700 | 2,516,158 | |
| 78 | Jun 2027 | 242,660 | 174,329 | 8,746 | 722,265 | 84,924 | 3,174,670 | |
| 79 | Jul 2027 | 125,855 | 78,447 | 35,592 | 54,388 | 70,499 | 2,857,475 | |
| 80 | Aug 2027 | 111,943 | 136,662 | 49,167 | 60,213 | (170,880) | 2,404,722 | |
| 81 | Sep 2027 | 113,707 | 107,457 | 11,557 | 800,845 | 27,938 | 2,663,154 | |
| 82 | **Linkage Total** | **2,122,980** | **2,833,261** | **522,974** | **4,652,273** | **(18,864)** | **49,190,215** | |
| 83 | | | | | | | | |

| | A | H | I | J | K | L | M | N |
|---|---|---|---|---|---|---|---|---|
| 1 | **Public Service Company Of New Mexico** | | | | | | | |
| 2 | **Schedule P-7(a)** | | | | | | | |
| 3 | **Power Plant Maintenance** | | | | | | | |
| 4 | **Four Years Prior To Test Period (and** | | | | | | | |
| 5 | **Five Years Beyond Base Period and** | | | | | | | |
| 6 | **Test Period) Ending 9/30/2028** | | | | | | | |
| 7 | **This schedule is sponsored by** | | | | | | | |
| 8 | **PNM Witness Gutierrez** | | | | | | | |
| 9 | | | | | | | | |
| 10 | **Description** | **Lordsburg Station** | **Rio Bravo** | **La Luz** | **Renewables** | **Other** | **Total** | **Reference** |
| 84 | Oct 2027 | 277,639 | 234,190 | 18,178 | 269,453 | 37,001 | 4,867,331 | |
| 85 | Nov 2027 | 96,680 | 617,113 | 53,566 | 39,002 | (25,495) | 4,021,281 | |
| 86 | Dec 2027 | 212,865 | 144,070 | 20,831 | 602,441 | 34,505 | 3,403,407 | |
| 87 | Jan 2028 | 91,709 | 133,498 | 23,850 | 270,654 | (72,328) | 2,560,930 | |
| 88 | Feb 2028 | 73,465 | 160,785 | 119,555 | 106,191 | 765 | 3,126,629 | |
| 89 | Mar 2028 | 165,728 | 383,505 | 32,132 | 825,906 | 30,847 | 4,893,115 | |
| 90 | Apr 2028 | 217,223 | 393,544 | 29,307 | 38,684 | 33,111 | 5,843,214 | |
| 91 | May 2028 | 87,865 | 17,184 | 36,715 | 37,222 | 1,751 | 2,591,643 | |
| 92 | Jun 2028 | 249,940 | 179,559 | 9,008 | 743,933 | 87,472 | 3,269,910 | |
| 93 | Jul 2028 | 129,630 | 80,800 | 36,659 | 56,020 | 72,614 | 2,943,199 | |
| 94 | Aug 2028 | 115,301 | 140,762 | 50,642 | 62,019 | (176,006) | 2,476,864 | |
| 95 | Sep 2028 | 117,119 | 110,681 | 11,903 | 824,870 | 28,776 | 2,743,049 | |
| 96 | **Test Period Total** | **1,835,165** | **2,595,692** | **442,348** | **3,876,396** | **53,013** | **42,740,571** | |
| 97 | | | | | | | | |
| 98 | Jan 2028 | 91,709 | 133,498 | 23,850 | 270,654 | (72,328) | 2,560,930 | |
| 99 | Feb 2028 | 73,465 | 160,785 | 119,555 | 106,191 | 765 | 3,126,629 | |
| 100 | Mar 2028 | 165,728 | 383,505 | 32,132 | 825,906 | 30,847 | 4,893,115 | |
| 101 | Apr 2028 | 217,223 | 393,544 | 29,307 | 38,684 | 33,111 | 5,843,214 | |
| 102 | May 2028 | 87,865 | 17,184 | 36,715 | 37,222 | 1,751 | 2,591,643 | |
| 103 | Jun 2028 | 249,940 | 179,559 | 9,008 | 743,933 | 87,472 | 3,269,910 | |
| 104 | Jul 2028 | 129,630 | 80,800 | 36,659 | 56,020 | 72,614 | 2,943,199 | |
| 105 | Aug 2028 | 115,301 | 140,762 | 50,642 | 62,019 | (176,006) | 2,476,864 | |
| 106 | Sep 2028 | 117,119 | 110,681 | 11,903 | 824,870 | 28,776 | 2,743,049 | |
| 107 | Oct 2028 | 285,969 | 241,216 | 18,723 | 277,537 | 38,111 | 5,013,351 | |
| 108 | Nov 2028 | 99,581 | 635,627 | 55,173 | 40,172 | (26,259) | 4,141,919 | |
| 109 | Dec 2028 | 219,251 | 148,392 | 21,456 | 620,515 | 35,540 | 3,505,509 | |
| 110 | **Jan 2028 - Dec 2028 Total** | **1,852,780** | **2,625,553** | **445,125** | **3,903,723** | **54,394** | **43,109,331** | |

| | A | H | I | J | K | L | M | N |
|---|---|---|---|---|---|---|---|---|
| 1 | **Public Service Company Of New Mexico** | | | | | | | |
| 2 | **Schedule P-7(a)** | | | | | | | |
| 3 | **Power Plant Maintenance** | | | | | | | |
| 4 | **Four Years Prior To Test Period (and** | | | | | | | |
| 5 | **Five Years Beyond Base Period and** | | | | | | | |
| 6 | **Test Period) Ending 9/30/2028** | | | | | | | |
| 7 | **This schedule is sponsored by** | | | | | | | |
| 8 | **PNM Witness Gutierrez** | | | | | | | |
| 9 | | | | | | | | |
| 10 | **Description** | **Lordsburg Station** | **Rio Bravo** | **La Luz** | **Renewables** | **Other** | **Total** | **Reference** |
| 111 | | | | | | | | |
| 112 | Jan 2029 | 94,461 | 137,503 | 24,566 | 278,774 | (74,497) | 2,637,758 | |
| 113 | Feb 2029 | 75,669 | 165,608 | 123,142 | 109,377 | 788 | 3,220,428 | |
| 114 | Mar 2029 | 170,700 | 395,010 | 33,096 | 850,683 | 31,772 | 5,039,908 | |
| 115 | Apr 2029 | 223,739 | 405,351 | 30,186 | 39,845 | 34,104 | 6,018,510 | |
| 116 | May 2029 | 90,501 | 17,699 | 37,817 | 38,339 | 1,804 | 2,669,392 | |
| 117 | Jun 2029 | 257,438 | 184,946 | 9,279 | 766,251 | 90,096 | 3,368,007 | |
| 118 | Jul 2029 | 133,519 | 83,224 | 37,759 | 57,701 | 74,792 | 3,031,495 | |
| 119 | Aug 2029 | 118,760 | 144,985 | 52,161 | 63,879 | (181,286) | 2,551,170 | |
| 120 | Sep 2029 | 120,632 | 114,002 | 12,261 | 849,616 | 29,639 | 2,825,340 | |
| 121 | Oct 2029 | 294,548 | 248,453 | 19,285 | 285,863 | 39,254 | 5,163,752 | |
| 122 | Nov 2029 | 102,568 | 654,695 | 56,828 | 41,377 | (27,047) | 4,266,177 | |
| 123 | Dec 2029 | 225,829 | 152,844 | 22,100 | 639,130 | 36,606 | 3,610,674 | |
| 124 | **Jan 2029 - Dec 2029 Total** | **1,908,364** | **2,704,320** | **458,479** | **4,020,834** | **56,025** | **44,402,611** | |
| 125 | | | | | | | | |
| 126 | Jan 2030 | 97,295 | 141,628 | 25,303 | 287,137 | (76,732) | 2,716,891 | |
| 127 | Feb 2030 | 77,939 | 170,576 | 126,836 | 112,658 | 811 | 3,317,041 | |
| 128 | Mar 2030 | 175,821 | 406,860 | 34,089 | 876,203 | 32,725 | 5,191,105 | |
| 129 | Apr 2030 | 230,451 | 417,511 | 31,091 | 41,040 | 35,127 | 6,199,065 | |
| 130 | May 2030 | 93,216 | 18,230 | 38,951 | 39,489 | 1,858 | 2,749,474 | |
| 131 | Jun 2030 | 265,161 | 190,494 | 9,557 | 789,238 | 92,799 | 3,469,047 | |
| 132 | Jul 2030 | 137,525 | 85,721 | 38,892 | 59,432 | 77,036 | 3,122,440 | |
| 133 | Aug 2030 | 122,323 | 149,334 | 53,726 | 65,796 | (186,725) | 2,627,705 | |
| 134 | Sep 2030 | 124,251 | 117,422 | 12,628 | 875,105 | 30,529 | 2,910,101 | |
| 135 | Oct 2030 | 303,384 | 255,906 | 19,863 | 294,439 | 40,432 | 5,318,664 | |
| 136 | Nov 2030 | 105,645 | 674,336 | 58,533 | 42,619 | (27,859) | 4,394,162 | |
| 137 | Dec 2030 | 232,603 | 157,429 | 22,763 | 658,304 | 37,705 | 3,718,994 | |
| 138 | **Jan 2030 - Dec 2030 Total** | **1,965,614** | **2,785,449** | **472,233** | **4,141,459** | **57,706** | **45,734,689** | |

| | A | H | I | J | K | L | M | N |
|---|---|---|---|---|---|---|---|---|
| 1 | **Public Service Company Of New Mexico** | | | | | | | |
| 2 | **Schedule P-7(a)** | | | | | | | |
| 3 | **Power Plant Maintenance** | | | | | | | |
| 4 | **Four Years Prior To Test Period (and** | | | | | | | |
| 5 | **Five Years Beyond Base Period and** | | | | | | | |
| 6 | **Test Period) Ending 9/30/2028** | | | | | | | |
| 7 | **This schedule is sponsored by** | | | | | | | |
| 8 | **PNM Witness Gutierrez** | | | | | | | |
| 9 | | | | | | | | |
| 10 | **Description** | **Lordsburg Station** | **Rio Bravo** | **La Luz** | **Renewables** | **Other** | **Total** | **Reference** |
| 139 | | | | | | | | |
| 140 | Jan 2031 | 100,213 | 145,877 | 26,062 | 295,751 | (79,034) | 2,798,398 | |
| 141 | Feb 2031 | 80,277 | 175,694 | 130,641 | 116,038 | 836 | 3,416,552 | |
| 142 | Mar 2031 | 181,096 | 419,066 | 35,112 | 902,489 | 33,707 | 5,346,838 | |
| 143 | Apr 2031 | 237,365 | 430,037 | 32,024 | 42,272 | 36,181 | 6,385,037 | |
| 144 | May 2031 | 96,012 | 18,777 | 40,120 | 40,674 | 1,914 | 2,831,958 | |
| 145 | Jun 2031 | 273,116 | 196,209 | 9,844 | 812,915 | 95,583 | 3,573,119 | |
| 146 | Jul 2031 | 141,650 | 88,293 | 40,059 | 61,215 | 79,347 | 3,216,113 | |
| 147 | Aug 2031 | 125,993 | 153,814 | 55,338 | 67,770 | (192,327) | 2,706,536 | |
| 148 | Sep 2031 | 127,979 | 120,944 | 13,007 | 901,358 | 31,444 | 2,997,404 | |
| 149 | Oct 2031 | 312,486 | 263,583 | 20,459 | 303,272 | 41,645 | 5,478,224 | |
| 150 | Nov 2031 | 108,814 | 694,566 | 60,289 | 43,897 | (28,694) | 4,525,987 | |
| 151 | Dec 2031 | 239,582 | 162,152 | 23,446 | 678,053 | 38,836 | 3,830,564 | |
| 152 | **Jan 2031 - Dec 2031 Total** | **2,024,583** | **2,869,013** | **486,400** | **4,265,703** | **59,437** | **47,106,730** | |

| | A | B | C | D | E |
|---|---|---|---|---|---|
| 1 | **Public Service Company Of New Mexico** | | | | |
| 2 | **Schedule P-7(b)** | | | | |
| 3 | **Power Plant Maintenance** | | | | |
| 4 | **Scheduled System Maintenance by** | | | | |
| 5 | **Operating Unit for Five Years** | | | | |
| 6 | **Beyond Base Period** | | | | |
| 7 | **This schedule is sponsored by** | | | | |
| 8 | **PNM Witness Gutierrez** | | | | |
| 9 | | | | | |
| 10 | **Description** | **San Juan Station** | **Four Corners Station** | **Palo Verde Station** | **Afton Station** |
| 11 | Jul 2026 | - | - | 6,928 | - |
| 12 | Aug 2026 | - | - | 27,869 | - |
| 13 | Sep 2026 | - | - | 31,574 | - |
| 14 | Oct 2026 | - | - | 463,687 | 385,390 |
| 15 | Nov 2026 | - | - | 286,197 | - |
| 16 | Dec 2026 | - | - | (2,425) | - |
| 17 | Jan 2027 | - | 71,988 | 41,545 | - |
| 18 | Feb 2027 | - | 47,239 | 131,947 | - |
| 19 | Mar 2027 | - | 552,435 | 821,621 | 327,743 |
| 20 | Apr 2027 | - | 603,090 | 2,456,402 | - |
| 21 | May 2027 | - | - | 957,843 | - |
| 22 | Jun 2027 | - | - | (11,424) | - |
| 23 | Jul 2027 | - | - | 31,599 | - |
| 24 | Aug 2027 | - | - | 121,154 | - |
| 25 | Sep 2027 | - | - | 230,757 | - |
| 26 | **Linkage Total** | **-** | **1,274,751** | **5,595,274** | **713,134** |
| 27 | | | | | |

| | A | B | C | D | E |
|---|---|---|---|---|---|
| 1 | **Public Service Company Of New Mexico** | | | | |
| 2 | **Schedule P-7(b)** | | | | |
| 3 | **Power Plant Maintenance** | | | | |
| 4 | **Scheduled System Maintenance by** | | | | |
| 5 | **Operating Unit for Five Years** | | | | |
| 6 | **Beyond Base Period** | | | | |
| 7 | **This schedule is sponsored by** | | | | |
| 8 | **PNM Witness Gutierrez** | | | | |
| 9 | | | | | |
| 10 | **Description** | **San Juan Station** | **Four Corners Station** | **Palo Verde Station** | **Afton Station** |
| 28 | Oct 2027 | - | - | 2,624,503 | 327,770 |
| 29 | Nov 2027 | - | - | 1,583,397 | - |
| 30 | Dec 2027 | - | - | (152,049) | - |
| 31 | Jan 2028 | - | 176,415 | 15,122 | 3,619,657 |
| 32 | Feb 2028 | - | 128,628 | 28,002 | - |
| 33 | Mar 2028 | - | 1,353,819 | 81,993 | 2,534,656 |
| 34 | Apr 2028 | - | 1,463,252 | 601,152 | 2,528,774 |
| 35 | May 2028 | - | - | 256,094 | - |
| 36 | Jun 2028 | - | - | (1,926) | - |
| 37 | Jul 2028 | - | - | 35,512 | - |
| 38 | Aug 2028 | - | - | 136,945 | - |
| 39 | Sep 2028 | - | - | 365,646 | - |
| 40 | **Test Period Total** | **-** | **3,122,114** | **5,574,390** | **9,010,858** |
| 41 | | | | | |
| 42 | Jan 2028 | - | 176,415 | 15,122 | 3,619,657 |
| 43 | Feb 2028 | - | 128,628 | 28,002 | - |
| 44 | Mar 2028 | - | 1,353,819 | 81,993 | 2,534,656 |
| 45 | Apr 2028 | - | 1,463,252 | 601,152 | 2,528,774 |
| 46 | May 2028 | - | - | 256,094 | - |
| 47 | Jun 2028 | - | - | (1,926) | - |
| 48 | Jul 2028 | - | - | 35,512 | - |
| 49 | Aug 2028 | - | - | 136,945 | - |
| 50 | Sep 2028 | - | - | 365,646 | - |
| 51 | Oct 2028 | - | - | 2,795,682 | 258,169 |
| 52 | Nov 2028 | - | - | 1,715,889 | - |
| 53 | Dec 2028 | - | - | (167,115) | - |
| 54 | **Jan 2028 - Dec 2028 Total** | **-** | **3,122,114** | **5,862,995** | **8,941,256** |

| | A | B | C | D | E |
|---|---|---|---|---|---|
| 1 | **Public Service Company Of New Mexico** | | | | |
| 2 | **Schedule P-7(b)** | | | | |
| 3 | **Power Plant Maintenance** | | | | |
| 4 | **Scheduled System Maintenance by** | | | | |
| 5 | **Operating Unit for Five Years** | | | | |
| 6 | **Beyond Base Period** | | | | |
| 7 | **This schedule is sponsored by** | | | | |
| 8 | **PNM Witness Gutierrez** | | | | |
| 9 | | | | | |
| 10 | **Description** | **San Juan Station** | **Four Corners Station** | **Palo Verde Station** | **Afton Station** |
| 55 | | | | | |
| 56 | Jan 2029 | - | 61,321 | 15,583 | - |
| 57 | Feb 2029 | - | 122,642 | 28,856 | - |
| 58 | Mar 2029 | - | 551,889 | 84,491 | 408,870 |
| 59 | Apr 2029 | - | 490,568 | 619,469 | - |
| 60 | May 2029 | - | - | 263,897 | - |
| 61 | Jun 2029 | - | - | (1,985) | - |
| 62 | Jul 2029 | - | - | 36,594 | - |
| 63 | Aug 2029 | - | - | 141,118 | - |
| 64 | Sep 2029 | - | - | 376,787 | - |
| 65 | Oct 2029 | - | - | 2,880,868 | 408,570 |
| 66 | Nov 2029 | - | - | 1,768,173 | - |
| 67 | Dec 2029 | - | - | (172,207) | - |
| 68 | **Jan 2029 - Dec 2029 Total** | **-** | **1,226,420** | **6,041,644** | **817,440** |
| 69 | | | | | |
| 70 | Jan 2030 | - | 57,420 | 16,130 | - |
| 71 | Feb 2030 | - | 114,841 | 29,870 | - |
| 72 | Mar 2030 | - | 516,784 | 87,462 | 507,220 |
| 73 | Apr 2030 | - | 459,364 | 641,252 | - |
| 74 | May 2030 | - | - | 273,177 | - |
| 75 | Jun 2030 | - | - | (2,055) | - |
| 76 | Jul 2030 | - | - | 37,881 | - |
| 77 | Aug 2030 | - | - | 146,080 | - |
| 78 | Sep 2030 | - | - | 390,036 | - |
| 79 | Oct 2030 | - | - | 2,982,170 | 408,570 |
| 80 | Nov 2030 | - | - | 1,830,349 | - |
| 81 | Dec 2030 | - | - | (178,263) | - |
| 82 | **Jan 2030 - Dec 2030 Total** | **-** | **1,148,410** | **6,254,092** | **915,790** |

| | A | B | C | D | E |
|---|---|---|---|---|---|
| 1 | **Public Service Company Of New Mexico** | | | | |
| 2 | **Schedule P-7(b)** | | | | |
| 3 | **Power Plant Maintenance** | | | | |
| 4 | **Scheduled System Maintenance by** | | | | |
| 5 | **Operating Unit for Five Years** | | | | |
| 6 | **Beyond Base Period** | | | | |
| 7 | **This schedule is sponsored by** | | | | |
| 8 | **PNM Witness Gutierrez** | | | | |
| 9 | | | | | |
| 10 | **Description** | **San Juan Station** | **Four Corners Station** | **Palo Verde Station** | **Afton Station** |
| 83 | | | | | |
| 84 | Jan 2031 | - | 32,040 | 16,707 | - |
| 85 | Feb 2031 | - | 64,079 | 30,938 | - |
| 86 | Mar 2031 | - | 288,356 | 90,588 | 406,952 |
| 87 | Apr 2031 | - | 256,316 | 664,167 | - |
| 88 | May 2031 | - | - | 282,938 | - |
| 89 | Jun 2031 | - | - | (2,128) | - |
| 90 | Jul 2031 | - | - | 39,235 | - |
| 91 | Aug 2031 | - | - | 151,300 | - |
| 92 | Sep 2031 | - | - | 403,974 | - |
| 93 | Oct 2031 | - | - | 3,088,735 | 383,503 |
| 94 | Nov 2031 | - | - | 1,895,755 | - |
| 95 | Dec 2031 | - | - | (184,633) | - |
| 96 | **Jan 2031 - Dec 2031 Total** | **-** | **640,791** | **6,477,575** | **790,455** |

| | A | F | G | H | I | J | K | L |
|---|---|---|---|---|---|---|---|---|
| 1 | **Public Service Company Of New Mexico** | | | | | | | |
| 2 | **Schedule P-7(b)** | | | | | | | |
| 3 | **Power Plant Maintenance** | | | | | | | |
| 4 | **Scheduled System Maintenance by** | | | | | | | |
| 5 | **Operating Unit for Five Years** | | | | | | | |
| 6 | **Beyond Base Period** | | | | | | | |
| 7 | **This schedule is sponsored by** | | | | | | | |
| 8 | **PNM Witness Gutierrez** | | | | | | | |
| 9 | | | | | | | | |
| 10 | **Description** | **Reeves Station** | **Luna Station** | **Lordsburg Station** | **Rio Bravo** | **La Luz** | **Renewables** | **Other** |
| 11 | Jul 2026 | - | - | - | - | - | - | - |
| 12 | Aug 2026 | - | - | - | - | - | - | - |
| 13 | Sep 2026 | - | - | - | - | - | - | - |
| 14 | Oct 2026 | - | 27,660 | - | 138,860 | 102,191 | - | - |
| 15 | Nov 2026 | - | 248,942 | - | - | - | - | - |
| 16 | Dec 2026 | - | - | - | - | - | - | - |
| 17 | Jan 2027 | - | - | - | - | - | - | - |
| 18 | Feb 2027 | - | - | - | - | - | - | - |
| 19 | Mar 2027 | 170,352 | 365,446 | - | 113,768 | - | - | - |
| 20 | Apr 2027 | 97,676 | - | - | - | - | - | - |
| 21 | May 2027 | - | - | - | - | - | - | - |
| 22 | Jun 2027 | - | - | - | - | - | - | - |
| 23 | Jul 2027 | - | - | - | - | - | - | - |
| 24 | Aug 2027 | - | - | - | - | - | - | - |
| 25 | Sep 2027 | - | - | - | - | - | - | - |
| 26 | **Linkage Total** | **268,028** | **642,048** | **-** | **252,628** | **102,191** | **-** | **-** |
| 27 | | | | | | | | |

| | A | F | G | H | I | J | K | L |
|---|---|---|---|---|---|---|---|---|
| 1 | **Public Service Company Of New Mexico** | | | | | | | |
| 2 | **Schedule P-7(b)** | | | | | | | |
| 3 | **Power Plant Maintenance** | | | | | | | |
| 4 | **Scheduled System Maintenance by** | | | | | | | |
| 5 | **Operating Unit for Five Years** | | | | | | | |
| 6 | **Beyond Base Period** | | | | | | | |
| 7 | **This schedule is sponsored by** | | | | | | | |
| 8 | **PNM Witness Gutierrez** | | | | | | | |
| 9 | | | | | | | | |
| 10 | **Description** | **Reeves Station** | **Luna Station** | **Lordsburg Station** | **Rio Bravo** | **La Luz** | **Renewables** | **Other** |
| 28 | Oct 2027 | - | - | - | 63,634 | - | - | - |
| 29 | Nov 2027 | - | 334,814 | - | 63,634 | 334,814 | - | - |
| 30 | Dec 2027 | - | - | - | - | - | - | - |
| 31 | Jan 2028 | - | - | - | - | - | - | - |
| 32 | Feb 2028 | 100,606 | - | - | - | - | - | - |
| 33 | Mar 2028 | 100,108 | 424,773 | - | 116,776 | 424,773 | - | - |
| 34 | Apr 2028 | - | - | - | - | - | - | - |
| 35 | May 2028 | 100,606 | - | - | - | - | - | - |
| 36 | Jun 2028 | - | - | - | - | - | - | - |
| 37 | Jul 2028 | - | - | - | - | - | - | - |
| 38 | Aug 2028 | - | - | - | - | - | - | - |
| 39 | Sep 2028 | - | - | - | - | - | - | - |
| 40 | **Test Period Total** | **301,320** | **759,587** | **-** | **244,043** | **759,587** | **-** | **-** |
| 41 | | | | | | | | |
| 42 | Jan 2028 | - | - | - | - | - | - | - |
| 43 | Feb 2028 | 100,606 | - | - | - | - | - | - |
| 44 | Mar 2028 | 100,108 | 424,773 | - | 116,776 | - | - | - |
| 45 | Apr 2028 | - | - | - | - | - | - | - |
| 46 | May 2028 | 100,606 | - | - | - | - | - | - |
| 47 | Jun 2028 | - | - | - | - | - | - | - |
| 48 | Jul 2028 | - | - | - | - | - | - | - |
| 49 | Aug 2028 | - | - | - | - | - | - | - |
| 50 | Sep 2028 | - | - | - | - | - | - | - |
| 51 | Oct 2028 | - | - | - | 116,776 | 97,090 | - | - |
| 52 | Nov 2028 | - | 390,455 | - | - | - | - | - |
| 53 | Dec 2028 | - | - | - | - | - | - | - |
| 54 | **Jan 2028 - Dec 2028 Total** | **301,320** | **815,228** | **-** | **233,551** | **97,090** | **-** | **-** |

| | A | F | G | H | I | J | K | L |
|---|---|---|---|---|---|---|---|---|
| 1 | **Public Service Company Of New Mexico** | | | | | | | |
| 2 | **Schedule P-7(b)** | | | | | | | |
| 3 | **Power Plant Maintenance** | | | | | | | |
| 4 | **Scheduled System Maintenance by** | | | | | | | |
| 5 | **Operating Unit for Five Years** | | | | | | | |
| 6 | **Beyond Base Period** | | | | | | | |
| 7 | **This schedule is sponsored by** | | | | | | | |
| 8 | **PNM Witness Gutierrez** | | | | | | | |
| 9 | | | | | | | | |
| 10 | **Description** | **Reeves Station** | **Luna Station** | **Lordsburg Station** | **Rio Bravo** | **La Luz** | **Renewables** | **Other** |
| 55 | | | | | | | | |
| 56 | Jan 2029 | - | - | - | - | - | - | - |
| 57 | Feb 2029 | 340,339 | - | - | - | - | - | - |
| 58 | Mar 2029 | 1,249,821 | 509,728 | - | - | - | - | - |
| 59 | Apr 2029 | 1,249,821 | - | - | 1,093,738 | - | - | - |
| 60 | May 2029 | - | - | - | 1,093,738 | - | - | - |
| 61 | Jun 2029 | 291,356 | - | - | - | - | - | - |
| 62 | Jul 2029 | - | - | - | - | - | - | - |
| 63 | Aug 2029 | - | - | - | - | - | - | - |
| 64 | Sep 2029 | - | - | - | - | - | - | - |
| 65 | Oct 2029 | - | - | - | 119,876 | 102,525 | - | - |
| 66 | Nov 2029 | - | 468,546 | - | - | - | - | - |
| 67 | Dec 2029 | - | - | - | - | - | - | - |
| 68 | **Jan 2029 - Dec 2029 Total** | **3,131,337** | **978,274** | **-** | **2,307,352** | **102,525** | **-** | **-** |
| 69 | | | | | | | | |
| 70 | Jan 2030 | - | - | - | - | - | - | - |
| 71 | Feb 2030 | 98,579 | - | - | - | - | - | - |
| 72 | Mar 2030 | 569,680 | - | - | - | - | - | - |
| 73 | Apr 2030 | 1,451,663 | 508,703 | - | - | - | - | - |
| 74 | May 2030 | 1,451,663 | - | - | 123,065 | - | - | - |
| 75 | Jun 2030 | - | - | - | - | - | - | - |
| 76 | Jul 2030 | - | - | - | - | - | - | - |
| 77 | Aug 2030 | - | - | - | - | - | - | - |
| 78 | Sep 2030 | - | - | - | - | - | - | - |
| 79 | Oct 2030 | - | 763,054 | - | 123,065 | - | - | - |
| 80 | Nov 2030 | - | - | - | - | 105,368 | - | - |
| 81 | Dec 2030 | 0 | - | - | - | - | - | - |
| 82 | **Jan 2030 - Dec 2030 Total** | **3,571,584** | **1,271,756** | **-** | **246,131** | **105,368** | **-** | **-** |

| | A | F | G | H | I | J | K | L |
|---|---|---|---|---|---|---|---|---|
| 1 | **Public Service Company Of New Mexico** | | | | | | | |
| 2 | **Schedule P-7(b)** | | | | | | | |
| 3 | **Power Plant Maintenance** | | | | | | | |
| 4 | **Scheduled System Maintenance by** | | | | | | | |
| 5 | **Operating Unit for Five Years** | | | | | | | |
| 6 | **Beyond Base Period** | | | | | | | |
| 7 | **This schedule is sponsored by** | | | | | | | |
| 8 | **PNM Witness Gutierrez** | | | | | | | |
| 9 | | | | | | | | |
| 10 | **Description** | **Reeves Station** | **Luna Station** | **Lordsburg Station** | **Rio Bravo** | **La Luz** | **Renewables** | **Other** |
| 83 | | | | | | | | |
| 84 | Jan 2031 | - | - | - | - | - | - | - |
| 85 | Feb 2031 | 338,556 | - | - | - | - | - | - |
| 86 | Mar 2031 | 1,608,065 | - | - | - | - | - | - |
| 87 | Apr 2031 | 1,698,347 | 403,049 | - | - | - | - | - |
| 88 | May 2031 | 248,214 | - | - | 126,352 | - | - | - |
| 89 | Jun 2031 | - | - | - | - | - | - | - |
| 90 | Jul 2031 | - | - | - | - | - | - | - |
| 91 | Aug 2031 | - | - | - | - | - | - | - |
| 92 | Sep 2031 | - | - | - | - | - | - | - |
| 93 | Oct 2031 | - | 604,573 | - | 126,352 | 74,442 | - | - |
| 94 | Nov 2031 | - | - | - | - | 37,856 | - | - |
| 95 | Dec 2031 | - | - | - | - | - | - | - |
| 96 | **Jan 2031 - Dec 2031 Total** | **3,893,182** | **1,007,622** | **-** | **252,704** | **112,297** | **-** | **-** |

| | A | M | N |
|---|---|---|---|
| 1 | **Public Service Company Of New Mexico** | | |
| 2 | **Schedule P-7(b)** | | |
| 3 | **Power Plant Maintenance** | | |
| 4 | **Scheduled System Maintenance by** | | |
| 5 | **Operating Unit for Five Years** | | |
| 6 | **Beyond Base Period** | | |
| 7 | **This schedule is sponsored by** | | |
| 8 | **PNM Witness Gutierrez** | | |
| 9 | | | |
| 10 | **Description** | **Total** | **Reference** |
| 11 | Jul 2026 | 6,928 | |
| 12 | Aug 2026 | 27,869 | |
| 13 | Sep 2026 | 31,574 | |
| 14 | Oct 2026 | 1,117,789 | |
| 15 | Nov 2026 | 535,138 | |
| 16 | Dec 2026 | (2,425) | |
| 17 | Jan 2027 | 113,532 | |
| 18 | Feb 2027 | 179,186 | |
| 19 | Mar 2027 | 2,351,365 | |
| 20 | Apr 2027 | 3,157,168 | |
| 21 | May 2027 | 957,843 | |
| 22 | Jun 2027 | (11,424) | |
| 23 | Jul 2027 | 31,599 | |
| 24 | Aug 2027 | 121,154 | |
| 25 | Sep 2027 | 230,757 | |
| 26 | **Linkage Total** | **8,848,053** | |
| 27 | | | |

| | A | M | N |
|---|---|---|---|
| 1 | **Public Service Company Of New Mexico** | | |
| 2 | **Schedule P-7(b)** | | |
| 3 | **Power Plant Maintenance** | | |
| 4 | **Scheduled System Maintenance by** | | |
| 5 | **Operating Unit for Five Years** | | |
| 6 | **Beyond Base Period** | | |
| 7 | **This schedule is sponsored by** | | |
| 8 | **PNM Witness Gutierrez** | | |
| 9 | | | |
| 10 | **Description** | **Total** | **Reference** |
| 28 | Oct 2027 | 3,015,907 | |
| 29 | Nov 2027 | 2,316,658 | |
| 30 | Dec 2027 | (152,049) | |
| 31 | Jan 2028 | 3,811,194 | |
| 32 | Feb 2028 | 257,236 | |
| 33 | Mar 2028 | 5,036,899 | |
| 34 | Apr 2028 | 4,593,178 | |
| 35 | May 2028 | 356,699 | |
| 36 | Jun 2028 | (1,926) | |
| 37 | Jul 2028 | 35,512 | |
| 38 | Aug 2028 | 136,945 | |
| 39 | Sep 2028 | 365,646 | |
| 40 | **Test Period Total** | **19,771,899** | |
| 41 | | | |
| 42 | Jan 2028 | 3,811,194 | |
| 43 | Feb 2028 | 257,236 | |
| 44 | Mar 2028 | 4,612,125 | |
| 45 | Apr 2028 | 4,593,178 | |
| 46 | May 2028 | 356,699 | |
| 47 | Jun 2028 | (1,926) | |
| 48 | Jul 2028 | 35,512 | |
| 49 | Aug 2028 | 136,945 | |
| 50 | Sep 2028 | 365,646 | |
| 51 | Oct 2028 | 3,267,716 | |
| 52 | Nov 2028 | 2,106,344 | |
| 53 | Dec 2028 | (167,115) | |
| 54 | **Jan 2028 - Dec 2028 Total** | **19,373,555** | |

| | A | M | N |
|---|---|---|---|
| 1 | **Public Service Company Of New Mexico** | | |
| 2 | **Schedule P-7(b)** | | |
| 3 | **Power Plant Maintenance** | | |
| 4 | **Scheduled System Maintenance by** | | |
| 5 | **Operating Unit for Five Years** | | |
| 6 | **Beyond Base Period** | | |
| 7 | **This schedule is sponsored by** | | |
| 8 | **PNM Witness Gutierrez** | | |
| 9 | | | |
| 10 | **Description** | **Total** | **Reference** |
| 55 | | | |
| 56 | Jan 2029 | 76,904 | |
| 57 | Feb 2029 | 491,837 | |
| 58 | Mar 2029 | 2,804,800 | |
| 59 | Apr 2029 | 3,453,596 | |
| 60 | May 2029 | 1,357,635 | |
| 61 | Jun 2029 | 289,371 | |
| 62 | Jul 2029 | 36,594 | |
| 63 | Aug 2029 | 141,118 | |
| 64 | Sep 2029 | 376,787 | |
| 65 | Oct 2029 | 3,511,838 | |
| 66 | Nov 2029 | 2,236,719 | |
| 67 | Dec 2029 | (172,207) | |
| 68 | **Jan 2029 - Dec 2029 Total** | **14,604,991** | |
| 69 | | | |
| 70 | Jan 2030 | 73,551 | |
| 71 | Feb 2030 | 243,290 | |
| 72 | Mar 2030 | 1,681,146 | |
| 73 | Apr 2030 | 3,060,982 | |
| 74 | May 2030 | 1,847,905 | |
| 75 | Jun 2030 | (2,055) | |
| 76 | Jul 2030 | 37,881 | |
| 77 | Aug 2030 | 146,080 | |
| 78 | Sep 2030 | 390,036 | |
| 79 | Oct 2030 | 4,276,859 | |
| 80 | Nov 2030 | 1,935,717 | |
| 81 | Dec 2030 | (178,263) | |
| 82 | **Jan 2030 - Dec 2030 Total** | **13,513,129** | |

| | A | M | N |
|---|---|---|---|
| 1 | **Public Service Company Of New Mexico** | | |
| 2 | **Schedule P-7(b)** | | |
| 3 | **Power Plant Maintenance** | | |
| 4 | **Scheduled System Maintenance by** | | |
| 5 | **Operating Unit for Five Years** | | |
| 6 | **Beyond Base Period** | | |
| 7 | **This schedule is sponsored by** | | |
| 8 | **PNM Witness Gutierrez** | | |
| 9 | | | |
| 10 | **Description** | **Total** | **Reference** |
| 83 | | | |
| 84 | Jan 2031 | 48,746 | |
| 85 | Feb 2031 | 433,573 | |
| 86 | Mar 2031 | 2,393,961 | |
| 87 | Apr 2031 | 3,021,879 | |
| 88 | May 2031 | 657,505 | |
| 89 | Jun 2031 | (2,128) | |
| 90 | Jul 2031 | 39,235 | |
| 91 | Aug 2031 | 151,300 | |
| 92 | Sep 2031 | 403,974 | |
| 93 | Oct 2031 | 4,277,605 | |
| 94 | Nov 2031 | 1,933,610 | |
| 95 | Dec 2031 | (184,633) | |
| 96 | **Jan 2031 - Dec 2031 Total** | **13,174,627** | |

| | A |
|---|---|
| 1 | **Public Service Company Of New Mexico** |
| 2 | **Schedule P-7** |
| 3 | **Power Plant Maintenance (Notes)** |
| 4 | **This schedule is sponsored by PNM Witness Gutierrez** |
| 5 | |
| 6 | **Schedule P-7(a)** |
| 7 | **Four Years Prior To Test Period (and Five Years Beyond Base Period and Test Period) Ending 9/30/2028** |
| 8 | Base period data is historical information from the Company's Book Balance Amounts |
| 9 | For periods beyond the Base Period, PNM utilized Company Budget Data to populate the maintenance expense by |
| 10 | generation plant to provide monthly expense expectations. |
| 11 | |
| 12 | **Schedule P-7(b)** |
| 13 | **Scheduled System Maintenance by Operating Unit for Five Years Beyond Base Period** |
| 14 | Amounts shown reflect estimated planned outage costs in the applicable year. |
| 15 | Please refer to testimony of Witness Gray for discussion of plant outages. |

# PNM Schedule P-8

Customer service interruption information

**Public Service Company of New Mexico**
**P-8 Customer Service Interruption Information**

Four Years Prior to Test Period, Twelve Months of Base Period Ending June 30, 2026, Having a Duration of 15 Minutes or Longer and Affecting at Least 15 MW Load
**This schedule is sponsored by PNM Witness Gray**

| | Date | MW | Duration | Description | PNM Location | Location |
|---|---|---|---|---|---|---|
| 1 | 1/1/2022 12:37 | 25 | 3 Hrs, 23 Min | Richmond to Prager "RP" 115kv line Tripped and failed to reclose. Cause unknown crews in route. | Girard_ / Richmond, Montano Tap / Prager_ | Albuquerque |
| 2 | 2/16/2022 16:00 | 48 | 4 Hrs, 0 Min | Person SP 115kv line tripped opening Person 115kv breakers 15362 and 16462 | Person_ / Westmeco | Albuquerque |
| 3 | 2/26/2023 12:39 | 25 | 2 Hrs, 21 Min | Sandia to Richmond 115kv CG line outage | HW-CG 115 line / Richmond, Lenkurt_ / Sandia_ | Albuquerque |
| 4 | 4/9/2024 15:38 | 40 | 0 Hrs, 28 Min | MD-1 115kv breakers 56362 and 58562 tripped, De-energizing the Freeport Ivanhoe load. | MD-1 Station | Silver City |
| 5 | 5/9/2024 21:46 | 35 | 18 Hrs, 14 Min | Richmond 115kv to North 115kv (PN Line), North 115kv to Embudo 115kv (EB/TL) tripped open. Dropping about 35 mw of load. Cause unknown. Crews en-route. | Embudo_ / Morris_, Montgomery Plaza / North, North / Richmond | Albuquerque |
| 6 | 6/11/2024 19:06 | 17 | 20 Hrs, 54 Min | Zia 115/46kv Transformers 1 and 2 tripped offline. Cause unknown. | Camel Track / Zia Switching Station, Zia Switching Station | Santa Fe |
| 7 | 6/26/2024 23:54 | 26 | 0 Hrs, 51 Min | Alamogordo 115kv AC line tripped. | Alamogordo / Tularosa_, Gavilan_, Hollywood, Tularosa | Ruidoso |
| 8 | 6/29/2024 20:00 | 36 | 20 Hrs, 0 Min | 115Kv RR Line breakers 21162 and 22262 tripped and could not be re reclosed. | Corrales Bluff RR line RR2A / Corrales Bluffs | Albuquerque |
| 9 | 8/12/2024 17:07 | 15 | 5 Hrs, 11 Min | Zia 46kv "ZM" and "MS" lines tripped. | Alire_, Alire_ / Santa Fe_, Capitol, Capitol / Hickox_, Hickox_, Maez_ / Santa Fe_, Santa Fe_ | Santa Fe |
| 10 | 10/7/2024 7:11 | 27 | 0 Hrs, 52 Min | Balloon Struck RP 115kv Transmission Line causing trip. | Claremont, Girard_, Girard_ / Richmond, Montano Tap / Prager , Montano | Albuquerque |
| 11 | 1/8/2025 19:45 | 35 | 5 Hrs, 50 Min | Sandia 115/46 KV T1/T2 and ID Line OOS | ID-TA 46 line / Sandia_, Sandia_ | Tijeras |
| 12 | 2/14/2025 8:31 | 23 | 3 Hrs, 57 Min | TY (Turquoise - Freeport) 115kV Line and Turquoise PT OOS | Hidalgo_ / Turquoise, MD-1 Station / Turquoise, Turquoise / Tyrone, Tyrone | Silver City |
| 13 | 3/18/2025 16:57 | 39 | 1 Hr, 15 Min | 115kv "CG" Line Tripped | Bel Air_, Beverly Wood, Lenkurt_, Lenkurt_ / Sandia_, Princess Jeanne, San Pedro, Winrock_ | Albuquerque |
| 14 | 5/5/2025 15:33 | 15 | 0 Hrs, 28 Min | Zia 46kv ZP/PF line tripped | Ft Marcy_, Pecos_, Pecos_ / Zia Switching Station | Santa Fe |

# PNM Schedule P-9

Line loss information

**Public Service Company of New Mexico**

**P-9 PNM System Demand (MW) and Energy (GWh) Losses**

Four Years Prior to Test Period, Twelve Months of Test Period Ending September 30, 2028, and Five Years Beyond Test Period

**Demand Losses**

| Line No. | | Total Jurisdictional and FERC Distribution Losses (MW) | 46-69 kV Losses (MW) | Transmission Losses (MW) | Total Losses (MW) | FERC Transmission Losses (MW) | Total Jurisdictional (Retail) Distribution Losses (MW) | 46-69 kV Losses (MW) | Transmission Losses (MW) | Total Losses (MW) |
|---|---|---|---|---|---|---|---|---|---|---|
| Monthly Peak Days | | | | | | | | | | |
| 10 | 2027 | 119.35 | 5.34 | 45.14 | 169.83 | 0.00 | 119.35 | 5.34 | 45.14 | 169.83 |
| 11 | 2027 | 103.35 | 4.63 | 39.09 | 147.06 | 0.00 | 103.35 | 4.63 | 39.09 | 147.06 |
| 12 | 2027 | 109.75 | 4.91 | 41.51 | 156.17 | 0.00 | 109.75 | 4.91 | 41.51 | 156.17 |
| 1 | 2028 | 114.86 | 5.14 | 43.44 | 163.44 | 0.00 | 114.86 | 5.14 | 43.44 | 163.44 |
| 2 | 2028 | 113.88 | 5.10 | 43.07 | 162.05 | 0.00 | 113.88 | 5.10 | 43.07 | 162.05 |
| 3 | 2028 | 108.20 | 4.84 | 40.92 | 153.97 | 0.00 | 108.20 | 4.84 | 40.92 | 153.97 |
| 4 | 2028 | 108.90 | 4.87 | 41.19 | 154.96 | 0.00 | 108.90 | 4.87 | 41.19 | 154.96 |
| 5 | 2028 | 123.13 | 5.51 | 46.57 | 175.21 | 0.00 | 123.13 | 5.51 | 46.57 | 175.21 |
| 6 | 2028 | 153.82 | 6.89 | 58.18 | 218.88 | 0.00 | 153.82 | 6.89 | 58.18 | 218.88 |
| 7 | 2028 | 168.45 | 7.54 | 63.71 | 239.71 | 0.00 | 168.45 | 7.54 | 63.71 | 239.71 |
| 8 | 2028 | 156.58 | 7.01 | 59.22 | 222.81 | 0.00 | 156.58 | 7.01 | 59.22 | 222.81 |
| 9 | 2028 | 150.07 | 6.72 | 56.76 | 213.54 | 0.00 | 150.07 | 6.72 | 56.76 | 213.54 |
| Annual Peak Days | | | | | | | | | | |
| | 2023 | 139.82 | 6.26 | 52.88 | 198.96 | 0.00 | 139.82 | 6.26 | 52.88 | 198.96 |
| | 2024 | 138.60 | 6.20 | 52.42 | 197.23 | 0.00 | 138.60 | 6.20 | 52.42 | 197.23 |
| | 2025 | 140.60 | 6.29 | 53.18 | 200.07 | 0.00 | 140.60 | 6.29 | 53.18 | 200.07 |
| | 2026 | 143.96 | 6.44 | 54.45 | 204.85 | 0.00 | 143.96 | 6.44 | 54.45 | 204.85 |
| | 2027 | 155.30 | 6.95 | 58.74 | 220.99 | 0.00 | 155.30 | 6.95 | 58.74 | 220.99 |
| | 2028 | 168.45 | 7.54 | 63.71 | 239.71 | 0.00 | 168.45 | 7.54 | 63.71 | 239.71 |
| | 2029 | 182.80 | 8.18 | 69.14 | 260.13 | 0.00 | 182.80 | 8.18 | 69.14 | 260.13 |
| | 2030 | 185.94 | 8.32 | 70.33 | 264.59 | 0.00 | 185.94 | 8.32 | 70.33 | 264.59 |
| | 2031 | 189.34 | 8.48 | 71.61 | 269.43 | 0.00 | 189.34 | 8.48 | 71.61 | 269.43 |
| | 2032 | 190.58 | 8.53 | 72.08 | 271.20 | 0.00 | 190.58 | 8.53 | 72.08 | 271.20 |
| | 2033 | 190.68 | 8.54 | 72.12 | 271.34 | 0.00 | 190.68 | 8.54 | 72.12 | 271.34 |

Notes for Demand (MW) Losses

The methods, procedures, and formulae used to determine line loss conforms with the methods, procedures, and formulae used to prepare Schedule M-3.

Calculations start with estimated hourly class loads coincident with the PNM system peak. Demand loss multipliers are used.

R1, SP2, GP3, Irr10, PA6 and SL20: Secondary, Primary, and Substation Demand loss multipliers are applied to estimate CP loads on the Subtransmission system.

LP4 and Water11: Primary and Substation Demand loss multipliers are applies to estimate CP loads on the Subtransmission system

LS30 and LP35: Substation Demand loss multipliers are applied to estimate CP loads on the Subtransmission system..

The results scaled upwards for Distribution losses are then used to calculate loads on the Transmission system.

For all classes except LS5, LS33 and LS36: Subtransmission Demand loss multipliers are applied to estimate CP loads on the Transmission system.

The results scaled upwards for Distribution and Subtransmission losses are then used to calculate loads on the Generation system.

For all classes: Transmission Demand loss multipliers are applied to estimate CP loads on the Generation system.

The calculations do not include any adjustments for unaccounted for energy (UFE).

**Public Service Company of New Mexico**

**P-9 PNM System Demand (MW) and Energy (GWh) Losses**

Four Years Prior to Test Period, Twelve Months of Test Period Ending July 31, 2028, and Five Years Beyond Test Period

**This schedule is sponsored by PNM Witness Hayat**

**Energy Losses**

| | | Total Jurisdictional and FERC | | | | FERC | Total Jurisdictional (Retail) | | | |
|---|---|---|---|---|---|---|---|---|---|---|
| Month | | Distribution Losses (GWh) | 46-69 kV Losses (GWh) | Transmission Losses (GWh) | Total Losses (GWh) | Transmission Losses (GWh) | Distribution Losses (GWh) | 46-69 kV Losses (GWh) | Transmission Losses (GWh) | Total Losses (GWh) |
| Monthly | | | | | | | | | | |
| 10 | 2027 | 41.05 | 3.07 | 25.94 | 70.06 | 0.00 | 41.05 | 3.07 | 25.94 | 70.06 |
| 11 | 2027 | 39.69 | 2.97 | 25.08 | 67.74 | 0.00 | 39.69 | 2.97 | 25.08 | 67.74 |
| 12 | 2027 | 43.52 | 3.25 | 27.50 | 74.28 | 0.00 | 43.52 | 3.25 | 27.50 | 74.28 |
| 1 | 2028 | 45.77 | 3.42 | 28.92 | 78.11 | 0.00 | 45.77 | 3.42 | 28.92 | 78.11 |
| 2 | 2028 | 41.90 | 3.13 | 26.47 | 71.50 | 0.00 | 41.90 | 3.13 | 26.47 | 71.50 |
| 3 | 2028 | 42.45 | 3.17 | 26.82 | 72.45 | 0.00 | 42.45 | 3.17 | 26.82 | 72.45 |
| 4 | 2028 | 41.39 | 3.09 | 26.15 | 70.64 | 0.00 | 41.39 | 3.09 | 26.15 | 70.64 |
| 5 | 2028 | 43.87 | 3.28 | 27.72 | 74.86 | 0.00 | 43.87 | 3.28 | 27.72 | 74.86 |
| 6 | 2028 | 49.64 | 3.71 | 31.36 | 84.71 | 0.00 | 49.64 | 3.71 | 31.36 | 84.71 |
| 7 | 2028 | 55.22 | 4.13 | 34.89 | 94.23 | 0.00 | 55.22 | 4.13 | 34.89 | 94.23 |
| 8 | 2028 | 55.06 | 4.12 | 34.79 | 93.96 | 0.00 | 55.06 | 4.12 | 34.79 | 93.96 |
| 9 | 2028 | 49.52 | 3.70 | 31.29 | 84.52 | 0.00 | 49.52 | 3.70 | 31.29 | 84.52 |
| Annual | | | | | | | | | | |
| | 2023 | 403.53 | 30.17 | 254.96 | 688.66 | 0.00 | 403.53 | 30.17 | 254.96 | 688.66 |
| | 2024 | 409.24 | 30.60 | 258.57 | 698.41 | 0.00 | 409.24 | 30.60 | 258.57 | 698.41 |
| | 2025 | 424.51 | 31.74 | 268.21 | 724.47 | 0.00 | 424.51 | 31.74 | 268.21 | 724.47 |
| | 2026 | 443.08 | 33.13 | 279.95 | 756.16 | 0.00 | 443.08 | 33.13 | 279.95 | 756.16 |
| | 2027 | 497.49 | 37.20 | 314.32 | 849.01 | 0.00 | 497.49 | 37.20 | 314.32 | 849.01 |
| | 2028 | 568.52 | 42.51 | 359.20 | 970.23 | 0.00 | 568.52 | 42.51 | 359.20 | 970.23 |
| | 2029 | 645.33 | 48.25 | 407.73 | 1101.31 | 0.00 | 645.33 | 48.25 | 407.73 | 1101.31 |
| | 2030 | 672.66 | 50.30 | 425.00 | 1147.96 | 0.00 | 672.66 | 50.30 | 425.00 | 1147.96 |
| | 2031 | 682.21 | 51.01 | 431.03 | 1164.26 | 0.00 | 682.21 | 51.01 | 431.03 | 1164.26 |
| | 2032 | 685.65 | 51.27 | 433.21 | 1170.13 | 0.00 | 685.65 | 51.27 | 433.21 | 1170.13 |
| | 2033 | 687.53 | 51.41 | 434.40 | 1173.34 | 0.00 | 687.53 | 51.41 | 434.40 | 1173.34 |

Notes for Energy Losses (GWh):

The methods, procedures, and formulae used to determine line loss conforms with the methods, procedures, and formulae used to prepare Schedule M-3.

Calculations start with historical and forecasted monthly sales measured at the meter. Energy loss multipliers are applied.

R1, SP2, GP3, Irr10, PA6, and SL20: Secondary, Primary, and Substation Energy loss multipliers applied to estimate loads on the Subtransmission system.

LP4 and Water11: Primary and Substation Energy loss multipliers are applies to estimate loads on the Subtransmission system

LS30 and LP35: Substation Energy loss multipliers are applied to estimate loads on the Subtransmission system..

The results scaled upward for Distribution losses are then used to calculate loads on the Transmission system.

All classes except LS5, LS33 and LS36: Subtransmission Energy loss multipliers are applied to estimate loads on the Transmission system.

The results scaled upwards for Distribution and Subtransmission losses are then used to calculate loads on the Generation system.

All classes: Transmission Energy loss multipliers are applied to estimate loads on the Transmission system.

# PNM Schedule P-10

Reliability indices information

**Public Service Company of New Mexico**

Reliability Indices Information
Base Period – 12 months ending August 31, 2026

| Line No. | Year | Number of Outages | Actual Customers Served | ASAI Reliability Indices |
|---|---|---|---|---|
| | | *Four Years Prior to the Base Period (January – December)* | | |
| 1 | 2022 | 4012 | 544331 | 0.9998072 |
| 2 | 2023 | 4413 | 548675 | 0.9998246 |
| 3 | 2024 | 4600 | 553019 | 0.9919965 |
| 4 | 2025 | 4282 | 557399 | 0.9997783 |
| | | *Twelve Months of Base Period* | | |
| 5 | Sep 2025 | 436 | 556531 | 0.9997775 |
| 6 | Oct 2025 | 265 | 556849 | 0.9998957 |
| 7 | Nov 2025 | 181 | 557125 | 0.9999114 |
| 8 | Dec 2025 | 166 | 557399 | 0.9999473 |
| 9 | Jan 2026 | 285 | 557854 | 0.9998649 |
| 10 | Feb 2026 | 218 | 557981 | 0.9999045 |
| 11 | Mar 2026 | 254 | 558179 | 0.9999165 |
| 12 | Apr 2026 | 247 | 558254 | 0.9999179 |
| 13 | May 2026 | 367 | 558578 | 0.9997752 |
| 14 | Jun 2026 | 595 | 558930 | 0.9995233 |
| 15 | Jul 2026 | 804 | 559257 | 0.9995785 |
| 16 | Aug 2026 | 614 | 559773 | 0.9996412 |
| | | *Thirteen Months of Linkage Period*[1] | | |
| 17 | Sep 2026 | 533 | 560144 | 0.9995898 |
| 18 | Oct 2026 | 284 | 560509 | 0.9978517 |
| 19 | Nov 2026 | 234 | 560874 | 0.9978517 |
| 20 | Dec 2026 | 178 | 561239 | 0.9978517 |
| 21 | Jan 2027 | 217 | 561604 | 0.9978517 |
| 22 | Feb 2027 | 275 | 561969 | 0.9978517 |
| 23 | Mar 2027 | 289 | 562334 | 0.9978517 |
| 24 | Apr 2027 | 285 | 562699 | 0.9978517 |
| 25 | May 2027 | 407 | 563064 | 0.9978517 |
| 26 | Jun 2027 | 589 | 563429 | 0.9978517 |
| 27 | Jul 2027 | 706 | 563794 | 0.9978517 |
| 28 | Aug 2027 | 590 | 564159 | 0.9978517 |
| 29 | Sep 2027 | 378 | 564524 | 0.9978517 |

[1] Oct 2026 to Sep 2027 has been estimated

This schedule is sponsored by PNM Witness Gray.

| | | | | |
|---|---|---|---|---|
| | | *Twelve Months of Test Period*[2] | | |
| 30 | Oct 2027 | 284 | 564889 | 0.9978517 |
| 31 | Nov 2027 | 234 | 565254 | 0.9978517 |
| 32 | Dec 2027 | 178 | 565619 | 0.9978517 |
| 33 | Jan 2028 | 217 | 565984 | 0.9978517 |
| 34 | Feb 2028 | 275 | 566349 | 0.9978517 |
| 35 | Mar 2028 | 289 | 566714 | 0.9978517 |
| 36 | Apr 2028 | 285 | 567079 | 0.9978517 |
| 37 | May 2028 | 407 | 567444 | 0.9978517 |
| 38 | Jun 2028 | 589 | 567809 | 0.9978517 |
| 39 | Jul 2028 | 706 | 568174 | 0.9978517 |
| 40 | Aug 2028 | 590 | 568539 | 0.9978517 |
| 41 | Sep 2028 | 378 | 568904 | 0.9978517 |
| | | *Five Years Beyond the Test Period*[3] | | |
| 42 | 2029 | 4327 | 574379 | 0.9978517 |
| 43 | 2030 | 4327 | 578759 | 0.9978517 |
| 44 | 2031 | 4327 | 583139 | 0.9978517 |
| 45 | 2032 | 4327 | 587519 | 0.9978517 |
| 46 | 2033 | 4327 | 591899 | 0.9978517 |

[2] Estimated
[3] Estimated
This schedule is sponsored by PNM Witness Gray.

# PNM Schedule P-11

Reserve margin information

| | A | B | C | D | E |
|---|---|---|---|---|---|
| 1 | **Public Service Company of New Mexico** | | | | |
| 2 | **Schedule P-11** | | | | |
| 3 | **Reserve Margin Information** | | | | |
| 4 | **2023-2033 Inclusive Of Four Years Prior To And** | | | | |
| 5 | **Five Years Beyond Test Period Ending 9/30/2028** | | | | |
| 6 | **This schedule is sponsored by PNM Witness Gutierrez** | | | | |
| 7 | | **UCAP** | **UCAP** | **UCAP** | **UCAP** |
| 8 | **Description** | **2023** | **2024** | **2025** | **2026** |
| 9 | | | | | |
| 10 | Forecasted System Peak Demand | 2,131 | 2,072 | 2,064 | 2,285 |
| 11 | Forecasted Incremental Energy Efficiency | | | | (16) |
| 12 | Forecasted Incremental Customer Sited PV | | | | (7) |
| 13 | **Net System Peak Demand (MW)** | 2,131 | 2,072 | 2,064 | 2,262 |
| 14 | | | | | |
| 15 | San Juan | 0 | 0 | 0 | 0 |
| 16 | Four Corners | 144 | 144 | 144 | 144 |
| 17 | **Total Coal Resources (MW)** | 144 | 144 | 144 | 144 |
| 18 | | | | | |
| 19 | Palo Verde Units 1,2 & 3 | 271 | 271 | 271 | 271 |
| 20 | **Total Nuclear Resources (MW)** | 271 | 271 | 271 | 271 |
| 21 | | | | | |
| 22 | Reeves | 134 | 134 | 134 | 134 |
| 23 | Afton | 216 | 216 | 216 | 216 |
| 24 | Lordsburg | 84 | 84 | 84 | 84 |
| 25 | Luna | 175 | 175 | 175 | 175 |
| 26 | Rio Bravo | 146 | 146 | 146 | 146 |
| 27 | Valencia | 152 | 152 | 152 | 152 |
| 28 | 29-32 RFP Gas Resource | 0 | 0 | 0 | 0 |
| 29 | 29-32 RFP Gas Resource | 0 | 0 | 0 | 0 |
| 30 | La Luz | 40 | 40 | 40 | 40 |
| 31 | **Total Natural Gas Resources (MW)** | 947 | 947 | 947 | 947 |
| 32 | | | | | |
| 33 | **Total Demand Response Programs (MW)** | 31 | 25 | 25 | 25 |
| 34 | | | | | |

| | A | B | C | D | E |
|---|---|---|---|---|---|
| 1 | **Public Service Company of New Mexico** | | | | |
| 2 | **Schedule P-11** | | | | |
| 3 | **Reserve Margin Information** | | | | |
| 4 | **2023-2033 Inclusive Of Four Years Prior To And** | | | | |
| 5 | **Five Years Beyond Test Period Ending 9/30/2028** | | | | |
| 6 | **This schedule is sponsored by PNM Witness Gutierrez** | | | | |
| 7 | | **UCAP** | **UCAP** | **UCAP** | **UCAP** |
| 8 | **Description** | **2023** | **2024** | **2025** | **2026** |
| 35 | Wind Purchase (La Joya II) | 16 | 16 | 16 | 16 |
| 36 | Wind Purchase (NMWEC + Repower) | 23 | 23 | 23 | 23 |
| 37 | Wind Purchase (Red Mesa) | 12 | 12 | 12 | 12 |
| 38 | Utility-Scale Solar PV (22MW - 2012 REPP) | 4 | 4 | 4 | 4 |
| 39 | Utility-Scale Solar PV (21.5MW - 2013 REPP) | 4 | 4 | 4 | 4 |
| 40 | Utility-Scale Solar PV (23MW - 2014 REPP) | 4 | 4 | 4 | 4 |
| 41 | Utility-Scale Solar PV (40MW - 2015 REPP) | 7 | 7 | 7 | 7 |
| 42 | Utility-Scale Solar PV (50MW - 2018 REPP) | 9 | 9 | 9 | 9 |
| 43 | Arroyo Solar | 55 | 55 | 55 | 55 |
| 44 | Jicarilla 2 - Solar Direct Program | 9 | 9 | 9 | 9 |
| 45 | Jicarilla 1 Solar | 9 | 9 | 9 | 9 |
| 46 | San Juan Solar | 37 | 37 | 37 | 37 |
| 47 | Atrisco Solar | 0 | 58 | 58 | 58 |
| 48 | Dale Burgett Geothermal Plant | 8 | 8 | 8 | 8 |
| 49 | Community Solar I | 0 | 0 | 0 | 22 |
| 50 | Facebook Solar Energy Center 1, 2, & 3 | 5 | 5 | 5 | 5 |
| 51 | Britton Solar PV | 9 | 9 | 9 | 9 |
| 52 | Encino Solar PV | 9 | 9 | 9 | 9 |
| 53 | Encino North PV | 9 | 9 | 9 | 9 |
| 54 | Route 66 Solar PV | 9 | 9 | 9 | 9 |
| 55 | Sky Ranch Solar PV | 36 | 36 | 36 | 36 |
| 56 | Casa Mesa Wind | 6 | 6 | 6 | 6 |
| 57 | La Joya I Wind | 19 | 19 | 19 | 19 |
| 58 | Quail Ranch Solar | 19 | 19 | 19 | 19 |
| 59 | Windy Lane Solar | 0 | 0 | 0 | 0 |
| 60 | Star Light Solar | 0 | 0 | 0 | 0 |
| 61 | Four Mile Solar | 0 | 0 | 0 | 0 |
| 62 | Sun Belt Solar | 0 | 0 | 0 | 0 |
| 63 | 29-32 RFP Solar | 0 | 0 | 0 | 0 |
| 64 | 29-32 RFP Wind | 0 | 0 | 0 | 0 |
| 65 | TAG Solar PV | 0 | 27 | 27 | 27 |
| 66 | **Total Renewable Resources (MW)** | 318 | 403 | 403 | 428 |

| | A | B | C | D | E |
|---|---|---|---|---|---|
| 1 | **Public Service Company of New Mexico** | | | | |
| 2 | **Schedule P-11** | | | | |
| 3 | **Reserve Margin Information** | | | | |
| 4 | **2023-2033 Inclusive Of Four Years Prior To And** | | | | |
| 5 | **Five Years Beyond Test Period Ending 9/30/2028** | | | | |
| 6 | **This schedule is sponsored by PNM Witness Gutierrez** | | | | |
| 7 | | **UCAP** | **UCAP** | **UCAP** | **UCAP** |
| 8 | **Description** | **2023** | **2024** | **2025** | **2026** |
| 67 | | | | | |
| 68 | Corazon Storage (2028) | 0 | 0 | 0 | 0 |
| 69 | Sun Lasso (2028) | 0 | 0 | 0 | 0 |
| 70 | Sun Belt Storage (2028) | 0 | 0 | 0 | 0 |
| 71 | Sandia Storage | 0 | 0 | 0 | 45 |
| 72 | Route 66 Storage | 0 | 0 | 0 | 37 |
| 73 | Quail Ranch Storage | 0 | 0 | 0 | 74 |
| 74 | Distribution Storage | 0 | 0 | 9 | 9 |
| 75 | Four Mile Storage | 0 | 0 | 0 | 0 |
| 76 | Star Light Storage | 0 | 0 | 0 | 0 |
| 77 | Windy Lane Storage | 0 | 0 | 0 | 0 |
| 78 | Arroyo Storage | 143 | 106 | 106 | 112 |
| 79 | Jicarilla 1 Storage | 19 | 15 | 15 | 15 |
| 80 | San Juan Storage | 0 | 74 | 74 | 74 |
| 81 | Atrisco Storage | 0 | 223 | 223 | 223 |
| 82 | Sky Ranch Storage | 0 | 37 | 37 | 112 |
| 83 | 29-32 RFP Storage | 0 | 0 | 0 | 0 |
| 84 | TAG Storage | 0 | 37 | 37 | 37 |
| 85 | Long Duration Storage | 0 | 0 | 0 | 0 |
| 86 | **Total Storage Resources (MW)** | 162 | 492 | 501 | 738 |
| 87 | | | | | |
| 88 | Firm Wholesale Purchase | 0 | | | |
| 89 | **Total Purchase Resources (MW)** | 0 | 0 | 0 | 0 |
| 90 | | | | | |
| 91 | **Total Resources (MW)** | 1,873 | 2,282 | 2,291 | 2,553 |
| 92 | | | | | |
| 93 | **Reserve Margin (MW)** | (258) | 210 | 227 | 291 |
| 94 | **Reserve Margin (%)** | -12.1% | 10.1% | 11.0% | 12.8% |

| | A | F | G | H | I |
|---|---|---|---|---|---|
| 1 | **Public Service Company of New Mexico** | | | | |
| 2 | **Schedule P-11** | | | | |
| 3 | **Reserve Margin Information** | | | | |
| 4 | **2023-2033 Inclusive Of Four Years Prior To And** | | | | |
| 5 | **Five Years Beyond Test Period Ending 9/30/2028** | | | | |
| 6 | **This schedule is sponsored by PNM Witness Gutierrez** | | | | |
| 7 | | **UCAP** | **UCAP** | **UCAP** | **UCAP** |
| 8 | **Description** | **2027** | **2028** | **2029** | **2030** |
| 9 | | | | | |
| 10 | Forecasted System Peak Demand | 2,461 | 2,690 | 2,970 | 3,099 |
| 11 | Forecasted Incremental Energy Efficiency | (35) | (53) | (70) | (95) |
| 12 | Forecasted Incremental Customer Sited PV | (19) | (32) | (45) | (58) |
| 13 | **Net System Peak Demand (MW)** | 2,407 | 2,605 | 2,855 | 2,946 |
| 14 | | | | | |
| 15 | San Juan | 0 | 0 | 0 | 0 |
| 16 | Four Corners | 144 | 144 | 144 | 144 |
| 17 | **Total Coal Resources (MW)** | 144 | 144 | 144 | 144 |
| 18 | | | | | |
| 19 | Palo Verde Units 1,2 & 3 | 271 | 271 | 271 | 271 |
| 20 | **Total Nuclear Resources (MW)** | 271 | 271 | 271 | 271 |
| 21 | | | | | |
| 22 | Reeves | 134 | 134 | 134 | 134 |
| 23 | Afton | 216 | 216 | 216 | 216 |
| 24 | Lordsburg | 84 | 84 | 84 | 84 |
| 25 | Luna | 175 | 175 | 175 | 175 |
| 26 | Rio Bravo | 146 | 146 | 146 | 146 |
| 27 | Valencia | 152 | 164 | 164 | 164 |
| 28 | 29-32 RFP Gas Resource | 0 | 0 | 169 | 169 |
| 29 | 29-32 RFP Gas Resource | 0 | 0 | 0 | 0 |
| 30 | La Luz | 40 | 40 | 40 | 40 |
| 31 | **Total Natural Gas Resources (MW)** | 947 | 959 | 1,128 | 1,128 |
| 32 | | | | | |
| 33 | **Total Demand Response Programs (MW)** | 25 | 25 | 25 | 0 |
| 34 | | | | | |

| | A | F | G | H | I |
|---|---|---|---|---|---|
| 1 | **Public Service Company of New Mexico** | | | | |
| 2 | **Schedule P-11** | | | | |
| 3 | **Reserve Margin Information** | | | | |
| 4 | **2023-2033 Inclusive Of Four Years Prior To And** | | | | |
| 5 | **Five Years Beyond Test Period Ending 9/30/2028** | | | | |
| 6 | **This schedule is sponsored by PNM Witness Gutierrez** | | | | |
| 7 | | **UCAP** | **UCAP** | **UCAP** | **UCAP** |
| 8 | **Description** | **2027** | **2028** | **2029** | **2030** |
| 35 | Wind Purchase (La Joya II) | 16 | 16 | 16 | 16 |
| 36 | Wind Purchase (NMWEC + Repower) | 23 | 23 | 23 | 23 |
| 37 | Wind Purchase (Red Mesa) | 12 | 12 | 12 | 12 |
| 38 | Utility-Scale Solar PV (22MW - 2012 REPP) | 4 | 4 | 4 | 4 |
| 39 | Utility-Scale Solar PV (21.5MW - 2013 REPP) | 4 | 4 | 4 | 4 |
| 40 | Utility-Scale Solar PV (23MW - 2014 REPP) | 4 | 4 | 4 | 4 |
| 41 | Utility-Scale Solar PV (40MW - 2015 REPP) | 7 | 7 | 7 | 7 |
| 42 | Utility-Scale Solar PV (50MW - 2018 REPP) | 9 | 9 | 9 | 9 |
| 43 | Arroyo Solar | 55 | 55 | 53 | 53 |
| 44 | Jicarilla 2 - Solar Direct Program | 9 | 9 | 9 | 9 |
| 45 | Jicarilla 1 Solar | 9 | 9 | 9 | 9 |
| 46 | San Juan Solar | 37 | 37 | 36 | 36 |
| 47 | Atrisco Solar | 57 | 57 | 56 | 56 |
| 48 | Dale Burgett Geothermal Plant | 8 | 8 | 8 | 8 |
| 49 | Community Solar I | 25 | 46 | 52 | 57 |
| 50 | Facebook Solar Energy Center 1, 2, & 3 | 5 | 5 | 5 | 5 |
| 51 | Britton Solar PV | 9 | 9 | 9 | 9 |
| 52 | Encino Solar PV | 9 | 9 | 9 | 9 |
| 53 | Encino North PV | 9 | 9 | 9 | 9 |
| 54 | Route 66 Solar PV | 9 | 9 | 9 | 9 |
| 55 | Sky Ranch Solar PV | 36 | 35 | 35 | 35 |
| 56 | Casa Mesa Wind | 6 | 6 | 6 | 6 |
| 57 | La Joya I Wind | 19 | 19 | 19 | 19 |
| 58 | Quail Ranch Solar | 19 | 19 | 19 | 19 |
| 59 | Windy Lane Solar | 17 | 17 | 17 | 17 |
| 60 | Star Light Solar | 19 | 19 | 19 | 19 |
| 61 | Four Mile Solar | 0 | 19 | 19 | 18 |
| 62 | Sun Belt Solar | 0 | 19 | 19 | 19 |
| 63 | 29-32 RFP Solar | 0 | 0 | 25 | 25 |
| 64 | 29-32 RFP Wind | 0 | 0 | 93 | 93 |
| 65 | TAG Solar PV | 27 | 27 | 27 | 27 |
| 66 | **Total Renewable Resources (MW)** | 467 | 524 | 641 | 645 |

| | A | F | G | H | I |
|---|---|---|---|---|---|
| 1 | **Public Service Company of New Mexico** | | | | |
| 2 | **Schedule P-11** | | | | |
| 3 | **Reserve Margin Information** | | | | |
| 4 | **2023-2033 Inclusive Of Four Years Prior To And** | | | | |
| 5 | **Five Years Beyond Test Period Ending 9/30/2028** | | | | |
| 6 | **This schedule is sponsored by PNM Witness Gutierrez** | | | | |
| 7 | | **UCAP** | **UCAP** | **UCAP** | **UCAP** |
| 8 | **Description** | **2027** | **2028** | **2029** | **2030** |
| 67 | | | | | |
| 68 | Corazon Storage (2028) | 0 | 112 | 112 | 112 |
| 69 | Sun Lasso (2028) | 0 | 112 | 112 | 112 |
| 70 | Sun Belt Storage (2028) | 0 | 19 | 37 | 37 |
| 71 | Sandia Storage | 45 | 45 | 45 | 45 |
| 72 | Route 66 Storage | 37 | 37 | 37 | 37 |
| 73 | Quail Ranch Storage | 74 | 74 | 74 | 74 |
| 74 | Distribution Storage | 9 | 31 | 31 | 31 |
| 75 | Four Mile Storage | 74 | 74 | 74 | 74 |
| 76 | Star Light Storage | 0 | 74 | 74 | 74 |
| 77 | Windy Lane Storage | 51 | 51 | 51 | 51 |
| 78 | Arroyo Storage | 112 | 112 | 112 | 112 |
| 79 | Jicarilla 1 Storage | 15 | 15 | 15 | 15 |
| 80 | San Juan Storage | 74 | 74 | 74 | 74 |
| 81 | Atrisco Storage | 223 | 223 | 223 | 223 |
| 82 | Sky Ranch Storage | 112 | 112 | 112 | 112 |
| 83 | 29-32 RFP Storage | 0 | 0 | 250 | 250 |
| 84 | TAG Storage | 37 | 37 | 37 | 37 |
| 85 | Long Duration Storage | 0 | 0 | 0 | 0 |
| 86 | **Total Storage Resources (MW)** | 863 | 1,202 | 1,470 | 1,470 |
| 87 | | | | | |
| 88 | Firm Wholesale Purchase | | | | |
| 89 | **Total Purchase Resources (MW)** | 0 | 0 | 0 | 0 |
| 90 | | | | | |
| 91 | **Total Resources (MW)** | 2,717 | 3,125 | 3,679 | 3,658 |
| 92 | | | | | |
| 93 | **Reserve Margin (MW)** | 310 | 520 | 825 | 712 |
| 94 | **Reserve Margin (%)** | 12.9% | 20.0% | 28.9% | 24.2% |

| | A | J | K | L |
|---|---|---|---|---|
| 1 | **Public Service Company of New Mexico** | | | |
| 2 | **Schedule P-11** | | | |
| 3 | **Reserve Margin Information** | | | |
| 4 | **2023-2033 Inclusive Of Four Years Prior To And** | | | |
| 5 | **Five Years Beyond Test Period Ending 9/30/2028** | | | |
| 6 | **This schedule is sponsored by PNM Witness Gutierrez** | | | |
| 7 | | **UCAP** | **UCAP** | **UCAP** |
| 8 | **Description** | **2031** | **2032** | **2033** |
| 9 | | | | |
| 10 | Forecasted System Peak Demand | 3,196 | 3,257 | 3,289 |
| 11 | Forecasted Incremental Energy Efficiency | (118) | (140) | (153) |
| 12 | Forecasted Incremental Customer Sited PV | (73) | (88) | (72) |
| 13 | **Net System Peak Demand (MW)** | 3,005 | 3,029 | 3,064 |
| 14 | | | | |
| 15 | San Juan | 0 | 0 | 0 |
| 16 | Four Corners | - | - | - |
| 17 | **Total Coal Resources (MW)** | 0 | 0 | 0 |
| 18 | | | | |
| 19 | Palo Verde Units 1,2 & 3 | 271 | 271 | 271 |
| 20 | **Total Nuclear Resources (MW)** | 271 | 271 | 271 |
| 21 | | | | |
| 22 | Reeves | 134 | 134 | 134 |
| 23 | Afton | 216 | 216 | 216 |
| 24 | Lordsburg | 84 | 84 | 84 |
| 25 | Luna | 175 | 175 | 175 |
| 26 | Rio Bravo | 146 | 146 | 146 |
| 27 | Valencia | 164 | 164 | 164 |
| 28 | 29-32 RFP Gas Resource | 169 | 169 | 169 |
| 29 | 29-32 RFP Gas Resource | 39 | 39 | 39 |
| 30 | La Luz | 40 | 40 | 40 |
| 31 | **Total Natural Gas Resources (MW)** | 1,167 | 1,167 | 1,167 |
| 32 | | | | |
| 33 | **Total Demand Response Programs (MW)** | 0 | 0 | 0 |
| 34 | | | | |

| | A | J | K | L |
|---|---|---|---|---|
| 1 | **Public Service Company of New Mexico** | | | |
| 2 | **Schedule P-11** | | | |
| 3 | **Reserve Margin Information** | | | |
| 4 | **2023-2033 Inclusive Of Four Years Prior To And** | | | |
| 5 | **Five Years Beyond Test Period Ending 9/30/2028** | | | |
| 6 | **This schedule is sponsored by PNM Witness Gutierrez** | | | |
| 7 | | **UCAP** | **UCAP** | **UCAP** |
| 8 | **Description** | **2031** | **2032** | **2033** |
| 35 | Wind Purchase (La Joya II) | 16 | 16 | 16 |
| 36 | Wind Purchase (NMWEC + Repower) | 23 | 23 | 23 |
| 37 | Wind Purchase (Red Mesa) | 12 | 12 | 12 |
| 38 | Utility-Scale Solar PV (22MW - 2012 REPP) | 4 | 4 | 4 |
| 39 | Utility-Scale Solar PV (21.5MW - 2013 REPP) | 4 | 4 | 4 |
| 40 | Utility-Scale Solar PV (23MW - 2014 REPP) | 4 | 4 | 4 |
| 41 | Utility-Scale Solar PV (40MW - 2015 REPP) | 7 | 6 | 7 |
| 42 | Utility-Scale Solar PV (50MW - 2018 REPP) | 8 | 8 | 9 |
| 43 | Arroyo Solar | 50 | 49 | 48 |
| 44 | Jicarilla 2 - Solar Direct Program | 8 | 8 | 8 |
| 45 | Jicarilla 1 Solar | 8 | 9 | 9 |
| 46 | San Juan Solar | 33 | 33 | 32 |
| 47 | Atrisco Solar | 53 | 52 | 50 |
| 48 | Dale Burgett Geothermal Plant | 8 | 8 | 8 |
| 49 | Community Solar I | 55 | 55 | 53 |
| 50 | Facebook Solar Energy Center 1, 2, & 3 | 5 | 5 | 5 |
| 51 | Britton Solar PV | 8 | 8 | 8 |
| 52 | Encino Solar PV | 8 | 8 | 8 |
| 53 | Encino North PV | 9 | 9 | 9 |
| 54 | Route 66 Solar PV | 9 | 8 | 8 |
| 55 | Sky Ranch Solar PV | 33 | 32 | 31 |
| 56 | Casa Mesa Wind | 6 | 6 | 6 |
| 57 | La Joya I Wind | 19 | 19 | 19 |
| 58 | Quail Ranch Solar | 18 | 18 | 17 |
| 59 | Windy Lane Solar | 16 | 18 | 16 |
| 60 | Star Light Solar | 18 | 17 | 15 |
| 61 | Four Mile Solar | 18 | 18 | 17 |
| 62 | Sun Belt Solar | 19 | 17 | 17 |
| 63 | 29-32 RFP Solar | 60 | 73 | 91 |
| 64 | 29-32 RFP Wind | 93 | 93 | 93 |
| 65 | TAG Solar PV | 27 | 24 | 24 |
| 66 | **Total Renewable Resources (MW)** | 659 | 663 | 670 |

| | A | J | K | L |
|---|---|---|---|---|
| 1 | **Public Service Company of New Mexico** | | | |
| 2 | **Schedule P-11** | | | |
| 3 | **Reserve Margin Information** | | | |
| 4 | **2023-2033 Inclusive Of Four Years Prior To And** | | | |
| 5 | **Five Years Beyond Test Period Ending 9/30/2028** | | | |
| 6 | **This schedule is sponsored by PNM Witness Gutierrez** | | | |
| 7 | | **UCAP** | **UCAP** | **UCAP** |
| 8 | **Description** | **2031** | **2032** | **2033** |
| 67 | | | | |
| 68 | Corazon Storage (2028) | 106 | 106 | 106 |
| 69 | Sun Lasso (2028) | 106 | 106 | 106 |
| 70 | Sun Belt Storage (2028) | 35 | 35 | 35 |
| 71 | Sandia Storage | 42 | 42 | 42 |
| 72 | Route 66 Storage | 35 | 35 | 35 |
| 73 | Quail Ranch Storage | 71 | 70.5 | 70.5 |
| 74 | Distribution Storage | 30 | 30 | 30 |
| 75 | Four Mile Storage | 71 | 70.5 | 70.5 |
| 76 | Star Light Storage | 71 | 70.5 | 70.5 |
| 77 | Windy Lane Storage | 48 | 48 | 48 |
| 78 | Arroyo Storage | 106 | 106 | 106 |
| 79 | Jicarilla 1 Storage | 14 | 14 | 14 |
| 80 | San Juan Storage | 71 | 71 | 71 |
| 81 | Atrisco Storage | 212 | 212 | 212 |
| 82 | Sky Ranch Storage | 106 | 106 | 106 |
| 83 | 29-32 RFP Storage | 460 | 460 | 460 |
| 84 | TAG Storage | 35 | 35 | 35 |
| 85 | Long Duration Storage | 0 | 0 | 92 |
| 86 | **Total Storage Resources (MW)** | 1,617 | 1,617 | 1,709 |
| 87 | | | | |
| 88 | Firm Wholesale Purchase | | | |
| 89 | **Total Purchase Resources (MW)** | 0 | 0 | 0 |
| 90 | | | | |
| 91 | **Total Resources (MW)** | 3,714 | 3,718 | 3,817 |
| 92 | | | | |
| 93 | **Reserve Margin (MW)** | 709 | 689 | 753 |
| 94 | **Reserve Margin (%)** | 23.6% | 22.8% | 24.6% |

| | A | B | C | D | E |
|---|---|---|---|---|---|
| 1 | **Public Service Company of New Mexico** | | | | |
| 2 | **Schedule P-11** | | | | |
| 3 | **Reserve Margin Information** | | | | |
| 4 | **Test Period Ending 9/30/2028** | | | | |
| 5 | **This schedule is sponsored by PNM Witness Gutierrez** | | | | |
| 6 | | **UCAP** | **UCAP** | **UCAP** | **UCAP** |
| 7 | **Description** | **Oct-27** | **Nov-27** | **Dec-27** | **Jan-28** |
| 8 | | | | | |
| 9 | Forecasted System Peak Demand | 1,852 | 1,639 | 1,861 | 1,877 |
| 10 | Forecasted Incremental Energy Efficiency | (26) | (23) | (26) | (38) |
| 11 | Forecasted Incremental Customer Sited PV | (14) | (12) | (14) | (23) |
| 12 | **Net System Peak Demand (MW)** | 1,812 | 1,604 | 1,821 | 1,816 |
| 13 | | | | | |
| 14 | San Juan | 0 | 0 | 0 | 0 |
| 15 | Four Corners | 144 | 144 | 144 | 144 |
| 16 | **Total Coal Resources (MW)** | 144 | 144 | 144 | 144 |
| 17 | | | | | |
| 18 | Palo Verde Units 1,2 & 3 | 271 | 271 | 271 | 271 |
| 19 | **Total Nuclear Resources (MW)** | 271 | 271 | 271 | 271 |
| 20 | | | | | |
| 21 | Reeves | 134 | 134 | 134 | 134 |
| 22 | Afton | 216 | 216 | 216 | 216 |
| 23 | Lordsburg | 84 | 84 | 84 | 84 |
| 24 | Luna | 175 | 175 | 175 | 175 |
| 25 | Rio Bravo | 146 | 146 | 146 | 146 |
| 26 | Valencia | 164 | 164 | 164 | 164 |
| 27 | 29-32 RFP Gas Resource | 0 | 0 | 0 | 0 |
| 28 | 29-32 RFP Gas Resource | 0 | 0 | 0 | 0 |
| 29 | La Luz | 40 | 40 | 40 | 40 |
| 30 | **Total Natural Gas Resources (MW)** | 959 | 959 | 959 | 959 |
| 31 | | | | | |
| 32 | **Total Demand Response Programs (MW)** | | | | |
| 33 | | | | | |

| | A | B | C | D | E |
|---|---|---|---|---|---|
| 1 | **Public Service Company of New Mexico** | | | | |
| 2 | **Schedule P-11** | | | | |
| 3 | **Reserve Margin Information** | | | | |
| 4 | **Test Period Ending 9/30/2028** | | | | |
| 5 | **This schedule is sponsored by PNM Witness Gutierrez** | | | | |
| 6 | | **UCAP** | **UCAP** | **UCAP** | **UCAP** |
| 7 | **Description** | **Oct-27** | **Nov-27** | **Dec-27** | **Jan-28** |
| 34 | Wind Purchase (La Joya II) | 16 | 16 | 16 | 16 |
| 35 | Wind Purchase (NMWEC + Repower) | 23 | 23 | 23 | 23 |
| 36 | Wind Purchase (Red Mesa) | 12 | 12 | 12 | 12 |
| 37 | Utility-Scale Solar PV (22MW - 2012 REPP) | 4 | 4 | 4 | 4 |
| 38 | Utility-Scale Solar PV (21.5MW - 2013 REPP) | 4 | 4 | 4 | 4 |
| 39 | Utility-Scale Solar PV (23MW - 2014 REPP) | 4 | 4 | 4 | 4 |
| 40 | Utility-Scale Solar PV (40MW - 2015 REPP) | 7 | 7 | 7 | 7 |
| 41 | Utility-Scale Solar PV (50MW - 2018 REPP) | 9 | 9 | 9 | 9 |
| 42 | Arroyo Solar | 55 | 55 | 55 | 55 |
| 43 | Jicarilla 2 - Solar Direct Program | 9 | 9 | 9 | 9 |
| 44 | Jicarilla 1 Solar | 9 | 9 | 9 | 9 |
| 45 | San Juan Solar | 37 | 37 | 37 | 37 |
| 46 | Atrisco Solar | 57 | 57 | 57 | 57 |
| 47 | Dale Burgett Geothermal Plant | 8 | 8 | 8 | 8 |
| 48 | Community Solar I | 25 | 25 | 25 | 31 |
| 49 | Facebook Solar Energy Center 1, 2, & 3 | 5 | 5 | 5 | 5 |
| 50 | Britton Solar PV | 9 | 9 | 9 | 9 |
| 51 | Encino Solar PV | 9 | 9 | 9 | 9 |
| 52 | Encino North PV | 9 | 9 | 9 | 9 |
| 53 | Route 66 Solar PV | 9 | 9 | 9 | 9 |
| 54 | Sky Ranch Solar PV | 36 | 36 | 36 | 35 |
| 55 | Casa Mesa Wind | 6 | 6 | 6 | 6 |
| 56 | La Joya I Wind | 19 | 19 | 19 | 19 |
| 57 | Quail Ranch Solar | 19 | 19 | 19 | 19 |
| 58 | Windy Lane Solar | 17 | 17 | 17 | 17 |
| 59 | Star Light Solar | 19 | 19 | 19 | 19 |
| 60 | Four Mile Solar | 0 | 0 | 0 | 0 |
| 61 | Sun Belt Solar | 0 | 0 | 0 | 0 |
| 62 | 29-32 RFP Solar | 0 | 0 | 0 | 0 |
| 63 | 29-32 RFP Wind | 0 | 0 | 0 | 0 |
| 64 | TAG Solar PV | 27 | 27 | 27 | 27 |
| 65 | **Total Renewable Resources (MW)** | 467 | 467 | 467 | 468 |

| | A | B | C | D | E |
|---|---|---|---|---|---|
| 1 | **Public Service Company of New Mexico** | | | | |
| 2 | **Schedule P-11** | | | | |
| 3 | **Reserve Margin Information** | | | | |
| 4 | **Test Period Ending 9/30/2028** | | | | |
| 5 | **This schedule is sponsored by PNM Witness Gutierrez** | | | | |
| 6 | | **UCAP** | **UCAP** | **UCAP** | **UCAP** |
| 7 | **Description** | **Oct-27** | **Nov-27** | **Dec-27** | **Jan-28** |
| 66 | | | | | |
| 67 | Corazon Storage (2028) | 0 | 0 | 0 | 0 |
| 68 | Sun Lasso (2028) | 0 | 0 | 0 | 0 |
| 69 | Sun Belt Storage (2028) | 0 | 0 | 0 | 0 |
| 70 | Sandia Storage | 45 | 45 | 45 | 45 |
| 71 | Route 66 Storage | 37 | 37 | 37 | 37 |
| 72 | Quail Ranch Storage | 74 | 74 | 74 | 74 |
| 73 | Distribution Storage | 31 | 31 | 31 | 31 |
| 74 | Four Mile Storage | 0 | 0 | 0 | 0 |
| 75 | Star Light Storage | 74 | 74 | 74 | 74 |
| 76 | Windy Lane Storage | 51 | 51 | 51 | 51 |
| 77 | Arroyo Storage | 106 | 106 | 106 | 106 |
| 78 | Jicarilla 1 Storage | 15 | 15 | 15 | 15 |
| 79 | San Juan Storage | 74 | 74 | 74 | 74 |
| 80 | Atrisco Storage | 223 | 223 | 223 | 223 |
| 81 | Sky Ranch Storage | 112 | 112 | 112 | 112 |
| 82 | 29-32 RFP Storage | 0 | 0 | 0 | 0 |
| 83 | TAG Storage | 37 | 37 | 37 | 37 |
| 84 | Long Duration Storage | 0 | 0 | 0 | 0 |
| 85 | **Total Storage Resources (MW)** | 879 | 879 | 879 | 879 |

| | A | B | C | D | E |
|---|---|---|---|---|---|
| 1 | **Public Service Company of New Mexico** | | | | |
| 2 | **Schedule P-11** | | | | |
| 3 | **Reserve Margin Information** | | | | |
| 4 | **Test Period Ending 9/30/2028** | | | | |
| 5 | **This schedule is sponsored by PNM Witness Gutierrez** | | | | |
| 6 | | **UCAP** | **UCAP** | **UCAP** | **UCAP** |
| 7 | **Description** | **Oct-27** | **Nov-27** | **Dec-27** | **Jan-28** |
| 86 | | | | | |
| 87 | Uniper | | | | |
| 88 | TriState | | | | |
| 89 | EPE | | | | |
| 90 | Firm Wholesale Purchase | | | | |
| 91 | Firm Wholesale Purchase | | | | |
| 92 | Firm Wholesale Purchase | | | | |
| 93 | Firm Wholesale Purchase | | | | |
| 94 | **Total Purchase Resources (MW)** | 0 | 0 | 0 | 0 |
| 95 | | | | | |
| 96 | **Total Resources (MW)** | 2,720 | 2,720 | 2,720 | 2,721 |
| 97 | | | | | |
| 98 | **Reserve Margin (MW)** | 908 | 1,116 | 899 | 905 |
| 99 | **Reserve Margin (%)** | 50.1% | 69.6% | 49.4% | 49.8% |

| | A | F | G | H | I |
|---|---|---|---|---|---|
| 1 | **Public Service Company of New Mexico** | | | | |
| 2 | **Schedule P-11** | | | | |
| 3 | **Reserve Margin Information** | | | | |
| 4 | **Test Period Ending 9/30/2028** | | | | |
| 5 | **This schedule is sponsored by PNM Witness Gutierrez** | | | | |
| 6 | | **UCAP** | **UCAP** | **UCAP** | **UCAP** |
| 7 | **Description** | **Feb-28** | **Mar-28** | **Apr-28** | **May-28** |
| 8 | | | | | |
| 9 | Forecasted System Peak Demand | 1,787 | 1,728 | 1,757 | 1,965 |
| 10 | Forecasted Incremental Energy Efficiency | (36) | (35) | (36) | (40) |
| 11 | Forecasted Incremental Customer Sited PV | (22) | (21) | (22) | (24) |
| 12 | **Net System Peak Demand (MW)** | 1,729 | 1,672 | 1,700 | 1,901 |
| 13 | | | | | |
| 14 | San Juan | 0 | 0 | 0 | 0 |
| 15 | Four Corners | 144 | 144 | 144 | 144 |
| 16 | **Total Coal Resources (MW)** | 144 | 144 | 144 | 144 |
| 17 | | | | | |
| 18 | Palo Verde Units 1,2 & 3 | 271 | 271 | 271 | 271 |
| 19 | **Total Nuclear Resources (MW)** | 271 | 271 | 271 | 271 |
| 20 | | | | | |
| 21 | Reeves | 134 | 134 | 134 | 134 |
| 22 | Afton | 216 | 216 | 216 | 216 |
| 23 | Lordsburg | 84 | 84 | 84 | 84 |
| 24 | Luna | 175 | 175 | 175 | 175 |
| 25 | Rio Bravo | 146 | 146 | 146 | 146 |
| 26 | Valencia | 164 | 164 | 164 | 164 |
| 27 | 29-32 RFP Gas Resource | 0 | 0 | 0 | 0 |
| 28 | 29-32 RFP Gas Resource | 0 | 0 | 0 | 0 |
| 29 | La Luz | 40 | 40 | 40 | 40 |
| 30 | **Total Natural Gas Resources (MW)** | 959 | 959 | 959 | 959 |
| 31 | | | | | |
| 32 | **Total Demand Response Programs (MW)** | | | | |
| 33 | | | | | |

| | A | F | G | H | I |
|---|---|---|---|---|---|
| 1 | **Public Service Company of New Mexico** | | | | |
| 2 | **Schedule P-11** | | | | |
| 3 | **Reserve Margin Information** | | | | |
| 4 | **Test Period Ending 9/30/2028** | | | | |
| 5 | **This schedule is sponsored by PNM Witness Gutierrez** | | | | |
| 6 | | **UCAP** | **UCAP** | **UCAP** | **UCAP** |
| 7 | **Description** | **Feb-28** | **Mar-28** | **Apr-28** | **May-28** |
| 34 | Wind Purchase (La Joya II) | 16 | 16 | 16 | 16 |
| 35 | Wind Purchase (NMWEC + Repower) | 23 | 23 | 23 | 23 |
| 36 | Wind Purchase (Red Mesa) | 12 | 12 | 12 | 12 |
| 37 | Utility-Scale Solar PV (22MW - 2012 REPP) | 4 | 4 | 4 | 4 |
| 38 | Utility-Scale Solar PV (21.5MW - 2013 REPP) | 4 | 4 | 4 | 4 |
| 39 | Utility-Scale Solar PV (23MW - 2014 REPP) | 4 | 4 | 4 | 4 |
| 40 | Utility-Scale Solar PV (40MW - 2015 REPP) | 7 | 7 | 7 | 7 |
| 41 | Utility-Scale Solar PV (50MW - 2018 REPP) | 9 | 9 | 9 | 9 |
| 42 | Arroyo Solar | 55 | 55 | 55 | 55 |
| 43 | Jicarilla 2 - Solar Direct Program | 9 | 9 | 9 | 9 |
| 44 | Jicarilla 1 Solar | 9 | 9 | 9 | 9 |
| 45 | San Juan Solar | 37 | 37 | 37 | 37 |
| 46 | Atrisco Solar | 57 | 57 | 57 | 57 |
| 47 | Dale Burgett Geothermal Plant | 8 | 8 | 8 | 8 |
| 48 | Community Solar I | 37 | 41 | 45 | 46 |
| 49 | Facebook Solar Energy Center 1, 2, & 3 | 5 | 5 | 5 | 5 |
| 50 | Britton Solar PV | 9 | 9 | 9 | 9 |
| 51 | Encino Solar PV | 9 | 9 | 9 | 9 |
| 52 | Encino North PV | 9 | 9 | 9 | 9 |
| 53 | Route 66 Solar PV | 9 | 9 | 9 | 9 |
| 54 | Sky Ranch Solar PV | 35 | 35 | 35 | 35 |
| 55 | Casa Mesa Wind | 6 | 6 | 6 | 6 |
| 56 | La Joya I Wind | 19 | 19 | 19 | 19 |
| 57 | Quail Ranch Solar | 19 | 19 | 19 | 19 |
| 58 | Windy Lane Solar | 17 | 17 | 17 | 17 |
| 59 | Star Light Solar | 19 | 19 | 19 | 19 |
| 60 | Four Mile Solar | 0 | 19 | 19 | 19 |
| 61 | Sun Belt Solar | 0 | 19 | 19 | 19 |
| 62 | 29-32 RFP Solar | 0 | 0 | 0 | 0 |
| 63 | 29-32 RFP Wind | 0 | 0 | 0 | 0 |
| 64 | TAG Solar PV | 27 | 27 | 27 | 27 |
| 65 | **Total Renewable Resources (MW)** | 474 | 516 | 520 | 524 |

| | A | F | G | H | I |
|---|---|---|---|---|---|
| 1 | **Public Service Company of New Mexico** | | | | |
| 2 | **Schedule P-11** | | | | |
| 3 | **Reserve Margin Information** | | | | |
| 4 | **Test Period Ending 9/30/2028** | | | | |
| 5 | **This schedule is sponsored by PNM Witness Gutierrez** | | | | |
| 6 | | **UCAP** | **UCAP** | **UCAP** | **UCAP** |
| 7 | **Description** | **Feb-28** | **Mar-28** | **Apr-28** | **May-28** |
| 66 | | | | | |
| 67 | Corazon Storage (2028) | 0 | 112 | 112 | 112 |
| 68 | Sun Lasso (2028) | 0 | 112 | 112 | 112 |
| 69 | Sun Belt Storage (2028) | 0 | 0 | 0 | 0 |
| 70 | Sandia Storage | 45 | 45 | 45 | 45 |
| 71 | Route 66 Storage | 37 | 37 | 37 | 37 |
| 72 | Quail Ranch Storage | 74 | 74 | 74 | 74 |
| 73 | Distribution Storage | 31 | 31 | 31 | 31 |
| 74 | Four Mile Storage | 0 | 74 | 74 | 74 |
| 75 | Star Light Storage | 74 | 74 | 74 | 74 |
| 76 | Windy Lane Storage | 51 | 51 | 51 | 51 |
| 77 | Arroyo Storage | 106 | 112 | 112 | 112 |
| 78 | Jicarilla 1 Storage | 15 | 15 | 15 | 15 |
| 79 | San Juan Storage | 74 | 74 | 74 | 74 |
| 80 | Atrisco Storage | 223 | 223 | 223 | 223 |
| 81 | Sky Ranch Storage | 112 | 112 | 112 | 112 |
| 82 | 29-32 RFP Storage | 0 | 0 | 0 | 0 |
| 83 | TAG Storage | 37 | 37 | 37 | 37 |
| 84 | Long Duration Storage | 0 | 0 | 0 | 0 |
| 85 | **Total Storage Resources (MW)** | 879 | 1,183 | 1,183 | 1,183 |

| | A | F | G | H | I |
|---|---|---|---|---|---|
| 1 | **Public Service Company of New Mexico** | | | | |
| 2 | **Schedule P-11** | | | | |
| 3 | **Reserve Margin Information** | | | | |
| 4 | **Test Period Ending 9/30/2028** | | | | |
| 5 | **This schedule is sponsored by PNM Witness Gutierrez** | | | | |
| 6 | | **UCAP** | **UCAP** | **UCAP** | **UCAP** |
| 7 | **Description** | **Feb-28** | **Mar-28** | **Apr-28** | **May-28** |
| 86 | | | | | |
| 87 | Uniper | | | | |
| 88 | TriState | | | | |
| 89 | EPE | | | | |
| 90 | Firm Wholesale Purchase | | | | |
| 91 | Firm Wholesale Purchase | | | | |
| 92 | Firm Wholesale Purchase | | | | |
| 93 | Firm Wholesale Purchase | | | | |
| 94 | **Total Purchase Resources (MW)** | 0 | 0 | 0 | 0 |
| 95 | | | | | |
| 96 | **Total Resources (MW)** | 2,727 | 3,073 | 3,077 | 3,081 |
| 97 | | | | | |
| 98 | **Reserve Margin (MW)** | 998 | 1,402 | 1,378 | 1,180 |
| 99 | **Reserve Margin (%)** | 57.7% | 83.9% | 81.0% | 62.1% |

| | A | J | K | L | M |
|---|---|---|---|---|---|
| 1 | **Public Service Company of New Mexico** | | | | |
| 2 | **Schedule P-11** | | | | |
| 3 | **Reserve Margin Information** | | | | |
| 4 | **Test Period Ending 9/30/2028** | | | | |
| 5 | **This schedule is sponsored by PNM Witness Gutierrez** | | | | |
| 6 | | **UCAP** | **UCAP** | **UCAP** | **UCAP** |
| 7 | **Description** | **Jun-28** | **Jul-28** | **Aug-28** | **Sep-28** |
| 8 | | | | | |
| 9 | Forecasted System Peak Demand | 2,528 | 2,690 | 2,432 | 2,273 |
| 10 | Forecasted Incremental Energy Efficiency | (51) | (53) | (49) | (46) |
| 11 | Forecasted Incremental Customer Sited PV | (31) | (32) | (30) | (28) |
| 12 | **Net System Peak Demand (MW)** | 2,446 | 2,605 | 2,353 | 2,199 |
| 13 | | | | | |
| 14 | San Juan | 0 | 0 | 0 | 0 |
| 15 | Four Corners | 144 | 144 | 144 | 144 |
| 16 | **Total Coal Resources (MW)** | 144 | 144 | 144 | 144 |
| 17 | | | | | |
| 18 | Palo Verde Units 1,2 & 3 | 271 | 271 | 271 | 271 |
| 19 | **Total Nuclear Resources (MW)** | 271 | 271 | 271 | 271 |
| 20 | | | | | |
| 21 | Reeves | 134 | 134 | 134 | 134 |
| 22 | Afton | 216 | 216 | 216 | 216 |
| 23 | Lordsburg | 84 | 84 | 84 | 84 |
| 24 | Luna | 175 | 175 | 175 | 175 |
| 25 | Rio Bravo | 146 | 146 | 146 | 146 |
| 26 | Valencia | 164 | 164 | 164 | 164 |
| 27 | 29-32 RFP Gas Resource | 0 | 0 | 0 | 0 |
| 28 | 29-32 RFP Gas Resource | 0 | 0 | 0 | 0 |
| 29 | La Luz | 40 | 40 | 40 | 40 |
| 30 | **Total Natural Gas Resources (MW)** | 959 | 959 | 959 | 959 |
| 31 | | | | | |
| 32 | **Total Demand Response Programs (MW)** | 25 | 25 | 25 | 25 |
| 33 | | | | | |

| | A | J | K | L | M |
|---|---|---|---|---|---|
| 1 | **Public Service Company of New Mexico** | | | | |
| 2 | **Schedule P-11** | | | | |
| 3 | **Reserve Margin Information** | | | | |
| 4 | **Test Period Ending 9/30/2028** | | | | |
| 5 | **This schedule is sponsored by PNM Witness Gutierrez** | | | | |
| 6 | | **UCAP** | **UCAP** | **UCAP** | **UCAP** |
| 7 | **Description** | **Jun-28** | **Jul-28** | **Aug-28** | **Sep-28** |
| 34 | Wind Purchase (La Joya II) | 16 | 16 | 16 | 16 |
| 35 | Wind Purchase (NMWEC + Repower) | 23 | 23 | 23 | 23 |
| 36 | Wind Purchase (Red Mesa) | 12 | 12 | 12 | 12 |
| 37 | Utility-Scale Solar PV (22MW - 2012 REPP) | 4 | 4 | 4 | 4 |
| 38 | Utility-Scale Solar PV (21.5MW - 2013 REPP) | 4 | 4 | 4 | 4 |
| 39 | Utility-Scale Solar PV (23MW - 2014 REPP) | 4 | 4 | 4 | 4 |
| 40 | Utility-Scale Solar PV (40MW - 2015 REPP) | 7 | 7 | 7 | 7 |
| 41 | Utility-Scale Solar PV (50MW - 2018 REPP) | 9 | 9 | 9 | 9 |
| 42 | Arroyo Solar | 55 | 55 | 55 | 55 |
| 43 | Jicarilla 2 - Solar Direct Program | 9 | 9 | 9 | 9 |
| 44 | Jicarilla 1 Solar | 9 | 9 | 9 | 9 |
| 45 | San Juan Solar | 37 | 37 | 37 | 37 |
| 46 | Atrisco Solar | 57 | 57 | 57 | 57 |
| 47 | Dale Burgett Geothermal Plant | 8 | 8 | 8 | 8 |
| 48 | Community Solar I | 46 | 46 | 46 | 46 |
| 49 | Facebook Solar Energy Center 1, 2, & 3 | 5 | 5 | 5 | 5 |
| 50 | Britton Solar PV | 9 | 9 | 9 | 9 |
| 51 | Encino Solar PV | 9 | 9 | 9 | 9 |
| 52 | Encino North PV | 9 | 9 | 9 | 9 |
| 53 | Route 66 Solar PV | 9 | 9 | 9 | 9 |
| 54 | Sky Ranch Solar PV | 35 | 35 | 35 | 35 |
| 55 | Casa Mesa Wind | 6 | 6 | 6 | 6 |
| 56 | La Joya I Wind | 19 | 19 | 19 | 19 |
| 57 | Quail Ranch Solar | 19 | 19 | 19 | 19 |
| 58 | Windy Lane Solar | 17 | 17 | 17 | 17 |
| 59 | Star Light Solar | 19 | 19 | 19 | 19 |
| 60 | Four Mile Solar | 19 | 19 | 19 | 19 |
| 61 | Sun Belt Solar | 19 | 19 | 19 | 19 |
| 62 | 29-32 RFP Solar | 0 | 0 | 0 | 0 |
| 63 | 29-32 RFP Wind | 0 | 0 | 0 | 0 |
| 64 | TAG Solar PV | 27 | 27 | 27 | 27 |
| 65 | **Total Renewable Resources (MW)** | 524 | 524 | 524 | 524 |

| | A | J | K | L | M |
|---|---|---|---|---|---|
| 1 | **Public Service Company of New Mexico** | | | | |
| 2 | **Schedule P-11** | | | | |
| 3 | **Reserve Margin Information** | | | | |
| 4 | **Test Period Ending 9/30/2028** | | | | |
| 5 | **This schedule is sponsored by PNM Witness Gutierrez** | | | | |
| 6 | | **UCAP** | **UCAP** | **UCAP** | **UCAP** |
| 7 | **Description** | **Jun-28** | **Jul-28** | **Aug-28** | **Sep-28** |
| 66 | | | | | |
| 67 | Corazon Storage (2028) | 112 | 112 | 112 | 112 |
| 68 | Sun Lasso (2028) | 112 | 112 | 112 | 112 |
| 69 | Sun Belt Storage (2028) | 19 | 19 | 19 | 19 |
| 70 | Sandia Storage | 45 | 45 | 45 | 45 |
| 71 | Route 66 Storage | 37 | 37 | 37 | 37 |
| 72 | Quail Ranch Storage | 74 | 74 | 74 | 74 |
| 73 | Distribution Storage | 31 | 31 | 31 | 31 |
| 74 | Four Mile Storage | 74 | 74 | 74 | 74 |
| 75 | Star Light Storage | 74 | 74 | 74 | 74 |
| 76 | Windy Lane Storage | 51 | 51 | 51 | 51 |
| 77 | Arroyo Storage | 112 | 112 | 112 | 112 |
| 78 | Jicarilla 1 Storage | 15 | 15 | 15 | 15 |
| 79 | San Juan Storage | 74 | 74 | 74 | 74 |
| 80 | Atrisco Storage | 223 | 223 | 223 | 223 |
| 81 | Sky Ranch Storage | 112 | 112 | 112 | 112 |
| 82 | 29-32 RFP Storage | 0 | 0 | 0 | 0 |
| 83 | TAG Storage | 37 | 37 | 37 | 37 |
| 84 | Long Duration Storage | 0 | 0 | 0 | 0 |
| 85 | **Total Storage Resources (MW)** | 1,202 | 1,202 | 1,202 | 1,202 |

| | A | J | K | L | M |
|---|---|---|---|---|---|
| 1 | **Public Service Company of New Mexico** | | | | |
| 2 | **Schedule P-11** | | | | |
| 3 | **Reserve Margin Information** | | | | |
| 4 | **Test Period Ending 9/30/2028** | | | | |
| 5 | **This schedule is sponsored by PNM Witness Gutierrez** | | | | |
| 6 | | **UCAP** | **UCAP** | **UCAP** | **UCAP** |
| 7 | **Description** | **Jun-28** | **Jul-28** | **Aug-28** | **Sep-28** |
| 86 | | | | | |
| 87 | Uniper | | | | |
| 88 | TriState | | | | |
| 89 | EPE | | | | |
| 90 | Firm Wholesale Purchase | | | | |
| 91 | Firm Wholesale Purchase | | | | |
| 92 | Firm Wholesale Purchase | | | | |
| 93 | Firm Wholesale Purchase | | | | |
| 94 | **Total Purchase Resources (MW)** | 0 | 0 | 0 | 0 |
| 95 | | | | | |
| 96 | **Total Resources (MW)** | 3,125 | 3,125 | 3,125 | 3,125 |
| 97 | | | | | |
| 98 | **Reserve Margin (MW)** | 679 | 520 | 772 | 926 |
| 99 | **Reserve Margin (%)** | 27.8% | 20.0% | 32.8% | 42.1% |

| | A |
|---|---|
| 1 | **Public Service Company of New Mexico** |
| 2 | **Schedule P-11** |
| 3 | **Reserve Margin Information (Notes)** |
| 4 | **Twelve Months of the Test Period Ending 9/30/2028** |
| 5 | **This schedule is sponsored by PNM Witness Gutierrez** |
| 6 | |
| 7 | 1. New Mexico Wind Energy Center (NMWEC) and Casa Mesa wind facilities share a single 200 MW interconnection |
| 8 | from which delivery of both projects are constrained by. |
| 9 | 2. Total resources exclude planned outages |
| 10 | 3. Resource projections for resources are based on effective load carrying capablity (ELCC) |
| 11 | 4. Historical Years 2023-2025 Loads are actual peak loads with Energy Effiency and Customer Sited PV netted to the load |

# PNM Schedule P-12

Fuel statistics information

| | A | B | C | D | E | F | G | H |
|---|---|---|---|---|---|---|---|---|
| 1 | **Public Service Company of New Mexico** | | | | | | | |
| 2 | **Schedule P-12** | | | | | | | |
| 3 | **Fuel Statistics Information** | | | | | | | |
| 4 | **Four Years Prior To Test Period Ending 9/30/2028** | | | | | | | |
| 5 | **This Schedule is sponsored by PNM Witness Gutierrez** | | | | | | | |
| 6 | **Description** | | **Year Ended 12/31/2023** | **Year Ended 12/31/2024** | **Year Ended 12/31/2025** | **Year Ended 12/31/2026** | **Reference 2023, 2024, 2025** | **Reference 2026** |
| 7 | | | | | | | | |
| 8 | **Cost of Fuel ($)** | | | | | | | |
| 9 | | Account | | | | | | |
| 10 | Coal (1) | 501 | 39,049,569 | 40,788,733 | 37,999,143 | 46,846,396 | Books and Records | Books and Records, Linkage |
| 11 | Natural Gas | 547 | 121,692,152 | 21,607,399 | 34,673,883 | 32,129,351 | Books and Records | Books and Records, Linkage |
| 12 | Natural Gas | 501 | 767,658 | 51,988 | 235,407 | 9,336,568 | Books and Records | Books and Records, Linkage |
| 13 | Fuel Oil | 501 | 89,968 | 1,399 | 4,678 | 90,620 | Books and Records | Books and Records, Linkage |
| 14 | Nuclear | 518 | 18,314,883 | 19,759,103 | 16,670,741 | 15,704,011 | Books and Records | Books and Records, Linkage |
| 15 | Cost of Fuel (1) | | 179,914,230 | 82,208,623 | 89,583,852 | 104,106,945 | Sum Lines 10 to 14 | Sum Lines 10 to 14 |
| 16 | | | | | | | | |
| 31 | Cost of Fuel ($/MMBtu) | | 2.58 | 1.70 | 2.05 | 1.82 | Books and Records | Books and Records, Linkage |
| 32 | | | | | | | | |

| | A | B | C | D | E | F | G | H |
|---|---|---|---|---|---|---|---|---|
| 1 | **Public Service Company of New Mexico** | | | | | | | |
| 2 | **Schedule P-12** | | | | | | | |
| 3 | **Fuel Statistics Information** | | | | | | | |
| 4 | **Four Years Prior To Test Period Ending 9/30/2028** | | | | | | | |
| 5 | **This Schedule is sponsored by PNM Witness Gutierrez** | | | | | | | |
| 6 | **Description** | | **Year Ended 12/31/2023** | **Year Ended 12/31/2024** | **Year Ended 12/31/2025** | **Year Ended 12/31/2026** | **Reference 2023, 2024, 2025** | **Reference 2026** |
| 33 | **Generation by Type (MWh)** | | | | | | | |
| 34 | | | | | | | | |
| 35 | Coal | | 971,644 | 436,557 | 391,426 | 1,058,546 | Books and Records | Books and Records, Linkage |
| 36 | Natural Gas | | 6,965,198 | 4,845,624 | 4,093,156 | 2,477,628 | Books and Records | Books and Records, Linkage |
| 37 | Fuel Oil | | N/A | N/A | N/A | N/A | Books and Records | Books and Records, Linkage |
| 38 | Nuclear | | 2,455,297 | 2,298,673 | 2,291,795 | 2,302,209 | Books and Records | Books and Records, Linkage |
| 39 | **(1) Excludes coal mine decommissioning, fixed transmission costs,** | | | | | | | |
| 40 | **and fixed transportation costs** | | | | | | | |
| 41 | **New Mexico Retail Share** | | | | | | | |
| 42 | **Cost of Fuel ($)** | | | | | | | |
| 43 | | Account | | | | | | |
| 44 | Coal (1) | 501 | 39,049,569 | 40,788,733 | 37,999,143 | 46,846,396 | Books and Records | Books and Records, Linkage |
| 45 | Natural Gas | 547 | 121,692,152 | 21,607,399 | 34,673,883 | 32,129,351 | Books and Records | Books and Records, Linkage |
| 46 | Natural Gas | 501 | 767,658 | 51,988 | 235,407 | 9,336,568 | Books and Records | Books and Records, Linkage |
| 47 | Fuel Oil | 501 | 89,968 | 1,399 | 4,678 | 90,620 | Books and Records | Books and Records, Linkage |
| 48 | Nuclear (1) | 518 | 18,314,883 | 19,759,103 | 16,670,741 | 15,704,011 | Books and Records | Books and Records, Linkage |
| 49 | Cost of Fuel (1) | | 179,914,230 | 82,208,623 | 89,583,852 | 104,106,945 | | |
| 50 | | | | | | | | |

| | A | B | C | D | E | F | G | H |
|---|---|---|---|---|---|---|---|---|
| 1 | **Public Service Company of New Mexico** | | | | | | | |
| 2 | **Schedule P-12** | | | | | | | |
| 3 | **Fuel Statistics Information** | | | | | | | |
| 4 | **Four Years Prior To Test Period Ending 9/30/2028** | | | | | | | |
| 5 | **This Schedule is sponsored by PNM Witness Gutierrez** | | | | | | | |
| 6 | **Description** | | **Year Ended 12/31/2023** | **Year Ended 12/31/2024** | **Year Ended 12/31/2025** | **Year Ended 12/31/2026** | **Reference 2023, 2024, 2025** | **Reference 2026** |
| 65 | Cost of Fuel ($/MMBtu) | | 2.58 | 1.70 | 2.05 | 1.82 | Books and Records | Linkage |
| 66 | | | | | | | | |
| 67 | **Generation by Type (MWh)** | | | | | | | |
| 68 | | | | | | | | |
| 69 | Coal | | 971,644 | 436,557 | 391,426 | 1,058,546 | Books and Records | Linkage |
| 70 | Natural Gas | | 6,965,198 | 4,845,624 | 4,093,156 | 2,477,628 | Books and Records | Linkage |
| 71 | Fuel Oil | | N/A | N/A | N/A | N/A | Books and Records | Linkage |
| 72 | Nuclear | | 2,455,297 | 2,298,673 | 2,291,795 | 2,302,209 | Books and Records | Linkage |
| 73 | | | | | | | | |
| 74 | | | | | | | | |
| 75 | **(1) Excludes coal mine decommissioning, fixed transmission costs,** | | | | | | | |
| 76 | **and fixed transportation costs** | | | | | | | |
| 77 | General Note: The electronic version of this worksheet uses the Microsoft Excel outline function. This function groups the elements of cost, and or columns for print formatting purposes. | | | | | | | |

| | A | B | C | D | E | F | G | H | I | J | K | L | M | N |
|---|---|---|---|---|---|---|---|---|---|---|---|---|---|---|
| 1 | **Public Service Company of New Mexico** | | | | | | | | | | | | | |
| 2 | **Schedule P-12** | | | | | | | | | | | | | |
| 3 | **Fuel Statistics Information** | | | | | | | | | | | | | |
| 4 | **Linkage Data** | | | | | | | | | | | | | |
| 5 | **This Schedule is sponsored by PNM Witness Gutierrez** | | | | | | | | | | | | | |
| 6 | | | | | | | | | | | | | | |
| 7 | **Description** | **FERC** | **Jul-26** | **Aug-26** | **Sep-26** | **Oct-26** | **Nov-26** | **Dec-26** | **Jan-27** | **Feb-27** | **Mar-27** | **Apr-27** | **May-27** | **Jun-27** |
| 8 | | | | | | | | | | | | | | |
| 9 | **Total System** | | | | | | | | | | | | | |
| 10 | **Cost of Fuel ($)** | | | | | | | | | | | | | |
| 11 | | | | | | | | | | | | | | |
| 12 | Coal | 501 | 4,605,910 | 4,635,498 | 4,295,074 | 4,477,694 | 5,220,901 | 6,065,599 | 6,577,708 | 4,765,380 | 3,215,208 | 2,473,874 | 2,971,505 | 3,966,692 |
| 13 | Natural Gas | 547 | 5,560,833 | 8,749,334 | 4,282,238 | 2,238,826 | 2,524,684 | 4,802,799 | 5,600,727 | 3,542,752 | 1,624,275 | 1,730,718 | 1,288,746 | 2,925,184 |
| 14 | Natural Gas | 501 | 1,204,242 | 1,601,792 | 1,352,195 | 969,854 | 1,154,336 | 1,228,303 | 1,588,351 | 1,148,550 | 679,468 | 636,280 | 435,102 | 849,884 |
| 15 | Fuel Oil | 501 | - | - | - | - | - | - | - | - | - | - | - | - |
| 16 | Nuclear | 518 | 1,437,440 | 1,437,440 | 1,088,960 | 1,352,946 | 1,380,305 | 1,176,647 | 1,566,028 | 1,527,905 | 1,137,102 | 1,421,239 | 1,611,420 | 1,253,869 |
| 17 | Cost of Fuel | | 12,808,425 | 16,424,064 | 11,018,467 | 9,039,320 | 10,280,226 | 13,273,347 | 15,332,815 | 10,984,587 | 6,656,053 | 6,262,111 | 6,306,773 | 8,995,630 |
| 18 | | | | | | | | | | | | | | |
| 19 | Cost of Fuel ($/MMBtu) | | 1.89 | 2.23 | 1.84 | 1.97 | 2.31 | 2.63 | 3.05 | 2.70 | 1.70 | 1.95 | 1.71 | 1.76 |
| 20 | | | | | | | | | | | | | | |
| 21 | | | | | | | | | | | | | | |
| 22 | **Generation by Type (MWh)** | | | | | | | | | | | | | |
| 23 | | | | | | | | | | | | | | |
| 24 | Coal | | 101,970 | 101,970 | 98,680 | 101,970 | 98,680 | 101,970 | 106,154 | 79,805 | 64,360 | 63,240 | 76,244 | 98,824 |
| 25 | Natural Gas | | 415,737 | 469,678 | 309,682 | 172,434 | 159,220 | 219,481 | 203,069 | 147,990 | 117,277 | 152,630 | 115,181 | 216,522 |
| 26 | Fuel Oil | | - | - | - | - | - | - | - | - | - | - | - | - |
| 27 | Nuclear | | 207,844 | 207,844 | 201,139 | 187,590 | 189,296 | 207,844 | 207,844 | 187,730 | 207,844 | 113,793 | 183,018 | 201,139 |
| 28 | | | | | | | | | | | | | | |

| | A | B | C | D | E | F | G | H | I | J | K | L | M | N |
|---|---|---|---|---|---|---|---|---|---|---|---|---|---|---|
| 1 | **Public Service Company of New Mexico** | | | | | | | | | | | | | |
| 2 | **Schedule P-12** | | | | | | | | | | | | | |
| 3 | **Fuel Statistics Information** | | | | | | | | | | | | | |
| 4 | **Linkage Data** | | | | | | | | | | | | | |
| 5 | **This Schedule is sponsored by PNM Witness Gutierrez** | | | | | | | | | | | | | |
| 6 | | | | | | | | | | | | | | |
| 7 | **Description** | **FERC** | **Jul-26** | **Aug-26** | **Sep-26** | **Oct-26** | **Nov-26** | **Dec-26** | **Jan-27** | **Feb-27** | **Mar-27** | **Apr-27** | **May-27** | **Jun-27** |
| 29 | **New Mexico Retail Share** | | | | | | | | | | | | | |
| 30 | **Cost of Fuel ($)** | | | | | | | | | | | | | |
| 31 | | | | | | | | | | | | | | |
| 32 | Coal | 501 | 4,605,910 | 4,635,498 | 4,295,074 | 4,477,694 | 5,220,901 | 6,065,599 | 6,577,708 | 4,765,380 | 3,215,208 | 2,473,874 | 2,971,505 | 3,966,692 |
| 33 | Natural Gas | 547 | 5,560,833 | 8,749,334 | 4,282,238 | 2,238,826 | 2,524,684 | 4,802,799 | 5,600,727 | 3,542,752 | 1,624,275 | 1,730,718 | 1,288,746 | 2,925,184 |
| 34 | Natural Gas | 501 | 1,204,242 | 1,601,792 | 1,352,195 | 969,854 | 1,154,336 | 1,228,303 | 1,588,351 | 1,148,550 | 679,468 | 636,280 | 435,102 | 849,884 |
| 35 | Fuel Oil | 501 | - | - | - | - | - | - | - | - | - | - | - | - |
| 36 | Nuclear | 518 | 1,437,440 | 1,437,440 | 1,088,960 | 1,352,946 | 1,380,305 | 1,176,647 | 1,566,028 | 1,527,905 | 1,137,102 | 1,421,239 | 1,611,420 | 1,253,869 |
| 37 | Cost of Fuel | | 12,808,425 | 16,424,064 | 11,018,467 | 9,039,320 | 10,280,226 | 13,273,347 | 15,332,815 | 10,984,587 | 6,656,053 | 6,262,111 | 6,306,773 | 8,995,630 |
| 38 | | | | | | | | | | | | | | |
| 39 | Cost of Fuel ($/MMBtu) | | 1.89 | 2.23 | 1.84 | 1.97 | 2.31 | 2.63 | 3.05 | 1.84 | 1.70 | 1.95 | 1.71 | 1.76 |
| 40 | | | | | | | | | | | | | | |
| 41 | | | | | | | | | | | | | | |
| 42 | **Generation by Type (MWh)** | | | | | | | | | | | | | |
| 43 | | | | | | | | | | | | | | |
| 44 | Coal | | 101,970 | 101,970 | 98,680 | 101,970 | 98,680 | 101,970 | 106,154 | 79,805 | 64,360 | 63,240 | 76,244 | 98,824 |
| 45 | Natural Gas | | 415,737 | 469,678 | 309,682 | 172,434 | 159,220 | 219,481 | 203,069 | 147,990 | 117,277 | 152,630 | 115,181 | 216,522 |
| 46 | Fuel Oil | | - | - | - | - | - | - | - | - | - | - | - | - |
| 47 | Nuclear | | 207,844 | 207,844 | 201,139 | 187,590 | 189,296 | 207,844 | 207,844 | 187,730 | 207,844 | 113,793 | 183,018 | 201,139 |
| 48 | | | | | | | | | | | | | | |

| | A | O | P | Q | R | S | T |
|---|---|---|---|---|---|---|---|
| 1 | **Public Service Company of New** | | | | | | |
| 2 | **Schedule P-12** | | | | | | |
| 3 | **Fuel Statistics Information** | | | | | | |
| 4 | **Linkage Data** | | | | | | |
| 5 | **This Schedule is sponsored by PI** | | | | **Total** | **Total** | |
| 6 | | | | | | | |
| 7 | **Description** | **Jul-27** | **Aug-27** | **Sep-27** | **July 2026 - Jun 2027** | **Oct 2026 - Sep 2027** | **Reference** |
| 8 | | | | | | | |
| 9 | **Total System** | | | | | | |
| 10 | **Cost of Fuel ($)** | | | | | | |
| 11 | | | | | | | |
| 12 | Coal | 5,143,810 | 5,225,830 | 5,002,137 | 53,271,045 | 55,106,339 | WP Fuel-9: Linkage Detail Line 75 |
| 13 | Natural Gas | 7,669,620 | 8,888,458 | 4,359,062 | 44,871,116 | 47,195,851 | WP Fuel-9: Linkage Detail Line 191 |
| 14 | Natural Gas | 1,644,020 | 1,923,209 | 1,265,490 | 12,848,357 | 13,522,848 | WP Fuel-9: Linkage Detail Line 76 |
| 15 | Fuel Oil | - | - | - | - | - | |
| 16 | Nuclear | 1,707,465 | 1,707,465 | 1,252,649 | 16,391,302 | 17,095,039 | WP Fuel-9: Linkage Detail Line 201 |
| 17 | Cost of Fuel | 16,164,915 | 17,744,961 | 11,879,338 | 127,381,820 | 132,920,077 | |
| 18 | | | | | | | |
| 19 | Cost of Fuel ($/MMBtu) | 2.12 | 2.21 | 1.90 | 2.15 | 2.18 | Line 17 / (H2-Linkage Lines 10 + Line 15 + line 25) |
| 20 | | | | | | | |
| 21 | | | | | | | |
| 22 | **Generation by Type (MWh)** | | | | | | |
| 23 | | | | | | | |
| 24 | Coal | 121,421 | 121,421 | 117,272 | 1,093,865 | 1,151,359 | WP Fuel-9: Linkage Detail Line 39 |
| 25 | Natural Gas | 476,957 | 518,383 | 319,911 | 2,698,901 | 2,819,056 | WP Fuel-9: Linkage Detail Line 68 + Line 192 |
| 26 | Fuel Oil | - | - | - | - | - | |
| 27 | Nuclear | 207,844 | 207,844 | 201,139 | 2,302,924 | 2,302,924 | WP Fuel-9: Linkage Detail Line 204 |
| 28 | | | | | | | |

| | A | O | P | Q | R | S | T |
|---|---|---|---|---|---|---|---|
| 1 | **Public Service Company of New** | | | | | | |
| 2 | **Schedule P-12** | | | | | | |
| 3 | **Fuel Statistics Information** | | | | | | |
| 4 | **Linkage Data** | | | | | | |
| 5 | **This Schedule is sponsored by PN** | | | | **Total** | **Total** | |
| 6 | | | | | | | |
| 7 | **Description** | **Jul-27** | **Aug-27** | **Sep-27** | **July 2026 - Jun 2027** | **Oct 2026 - Sep 2027** | **Reference** |
| 29 | **New Mexico Retail Share** | | | | | | |
| 30 | **Cost of Fuel ($)** | | | | | | |
| 31 | | | | | | | |
| 32 | Coal | 5,143,810 | 5,225,830 | 5,002,137 | 53,271,045 | 55,106,339 | Line 12 |
| 33 | Natural Gas | 7,669,620 | 8,888,458 | 4,359,062 | 44,871,116 | 47,195,851 | Line 13 |
| 34 | Natural Gas | 1,644,020 | 1,923,209 | 1,265,490 | 12,848,357 | 13,522,848 | Line 14 |
| 35 | Fuel Oil | - | - | - | - | - | Line 15 |
| 36 | Nuclear | 1,707,465 | 1,707,465 | 1,252,649 | 16,391,302 | 17,095,039 | Line 16 |
| 37 | Cost of Fuel | 16,164,915 | 17,744,961 | 11,879,338 | 127,381,820 | 132,920,077 | Line 32 + 33 + 34 + 35 + 36 |
| 38 | | | | | | | |
| 39 | Cost of Fuel ($/MMBtu) | 2.12 | 2.21 | 1.90 | 2.15 | 2.18 | Line 19 |
| 40 | | | | | | | |
| 41 | | | | | | | |
| 42 | **Generation by Type (MWh)** | | | | | | |
| 43 | | | | | | | |
| 44 | Coal | 121,421 | 121,421 | 117,272 | 1,093,865 | 1,151,359 | Line 24 |
| 45 | Natural Gas | 476,957 | 518,383 | 319,911 | 2,698,901 | 2,819,056 | Line 25 |
| 46 | Fuel Oil | - | - | - | - | - | Line 26 |
| 47 | Nuclear | 207,844 | 207,844 | 201,139 | 2,302,924 | 2,302,924 | Line 27 |
| 48 | | | | | | | |

| | A | B | C | D | E | F | G | H | I |
|---|---|---|---|---|---|---|---|---|---|
| 1 | **Public Service Company of New Mexico** | | | | | | | | |
| 2 | **Schedule P-12** | | | | | | | | |
| 3 | **Fuel Statistics Information** | | | | | | | | |
| 4 | **Test Period Ending 9/30/2028** | | | | | | | | |
| 5 | **This Schedule is sponsored by PNM Witness Gutierrez** | | | | | | | | |
| 6 | | | | | | | | | |
| 7 | **Description** | | **Oct-27** | **Nov-27** | **Dec-27** | **Jan-28** | **Feb-28** | **Mar-28** | **Apr-28** |
| 8 | | | | | | | | | |
| 9 | **Total System** | | | | | | | | |
| 10 | **Cost of Fuel ($)** | | | | | | | | |
| 11 | | | | | | | | | |
| 12 | Coal | 501 | 5,950,550 | 5,558,686 | 7,726,934 | 6,498,101 | 4,965,335 | 3,170,463 | 1,981,874 |
| 13 | Natural Gas | 547 | 2,300,667 | 3,581,376 | 6,714,305 | 8,021,715 | 6,772,721 | 1,870,942 | 1,461,313 |
| 14 | Natural Gas | 501 | 1,078,998 | 1,491,774 | 1,581,440 | 1,647,961 | 1,332,879 | 673,144 | 432,082 |
| 15 | Fuel Oil | 501 | - | - | - | - | - | - | - |
| 16 | Nuclear | 518 | 1,577,334 | 1,527,017 | 1,354,682 | 1,783,238 | 1,690,157 | 1,498,356 | 1,562,865 |
| 17 | Cost of Fuel | | 10,907,550 | 12,158,853 | 17,377,361 | 17,951,014 | 14,761,092 | 7,212,905 | 5,438,134 |
| 18 | | | | | | | | | |
| 19 | Cost of Fuel ($/MMBtu) | | 2.38 | 2.69 | 3.05 | 3.16 | 2.80 | 1.75 | 1.48 |
| 20 | | | | | | | | | |
| 21 | | | | | | | | | |
| 22 | **Generation by Type (MWh)** | | | | | | | | |
| 23 | | | | | | | | | |
| 24 | Coal | | 110,576 | 108,994 | 121,134 | 108,987 | 86,590 | 64,525 | 51,490 |
| 25 | Natural Gas | | 208,703 | 219,769 | 266,449 | 276,315 | 258,197 | 145,290 | 146,179 |
| 26 | Fuel Oil | | - | - | - | - | - | - | - |
| 27 | Nuclear | | 141,449 | 134,865 | 207,844 | 207,844 | 194,435 | 207,844 | 180,187 |
| 28 | | | | | | | | | |
| 29 | **New Mexico Retail Share** | | | | | | | | |
| 30 | **Cost of Fuel ($)** | | | | | | | | |
| 31 | | | | | | | | | |
| 32 | Coal | 501 | 5,950,550 | 5,558,686 | 7,726,934 | 6,498,101 | 4,965,335 | 3,170,463 | 1,981,874 |
| 33 | Natural Gas | 547 | 2,300,667 | 3,581,376 | 6,714,305 | 8,021,715 | 6,772,721 | 1,870,942 | 1,461,313 |
| 34 | Natural Gas | 501 | 1,078,998 | 1,491,774 | 1,581,440 | 1,647,961 | 1,332,879 | 673,144 | 432,082 |
| 35 | Fuel Oil | 501 | - | - | - | - | - | - | - |
| 36 | Nuclear | 518 | 1,577,334 | 1,527,017 | 1,354,682 | 1,783,238 | 1,690,157 | 1,498,356 | 1,562,865 |
| 37 | Cost of Fuel | | 10,907,550 | 12,158,853 | 17,377,361 | 17,951,014 | 14,761,092 | 7,212,905 | 5,438,134 |
| 38 | | | | | | | | | |
| 39 | Cost of Fuel ($/MMBtu) | | 2.38 | 2.69 | 3.05 | 3.16 | 2.80 | 1.75 | 1.48 |
| 40 | **Generation by Type (MWh)** | | | | | | | | |
| 41 | | | | | | | | | |
| 42 | Coal | | 110,576 | 108,994 | 121,134 | 108,987 | 86,590 | 64,525 | 51,490 |
| 43 | Natural Gas | | 208,703 | 219,769 | 266,449 | 276,315 | 258,197 | 145,290 | 146,179 |
| 44 | Fuel Oil | | - | - | - | - | - | - | - |
| 45 | Nuclear | | 141,449 | 134,865 | 207,844 | 207,844 | 194,435 | 207,844 | 180,187 |

| | A | B | J | K | L | M | N | O | P |
|---|---|---|---|---|---|---|---|---|---|
| 1 | **Public Service Company of New Mexico** | | | | | | | | |
| 2 | **Schedule P-12** | | | | | | | | |
| 3 | **Fuel Statistics Information** | | | | | | | | |
| 4 | **Test Period Ending 9/30/2028** | | | | | | | | |
| 5 | **This Schedule is sponsored by PNM Witness C** | | | | | | | | |
| 6 | | | | | | | | | |
| 7 | **Description** | | **May-28** | **Jun-28** | **Jul-28** | **Aug-28** | **Sep-28** | **Total** | **Reference** |
| 8 | | | | | | | | | |
| 9 | **Total System** | | | | | | | | |
| 10 | **Cost of Fuel ($)** | | | | | | | | |
| 11 | | | | | | | | | |
| 12 | Coal | 501 | 2,942,533 | 4,146,227 | 5,014,922 | 5,132,093 | 4,737,177 | 57,824,895 | WP Fuel-6: Test Detail Line 75 |
| 13 | Natural Gas | 547 | 1,225,536 | 3,365,684 | 11,308,790 | 13,224,823 | 7,154,156 | 67,002,028 | WP Fuel-6: Test Detail Line 191 |
| 14 | Natural Gas | 501 | 99,625 | 791,077 | 2,247,556 | 2,616,755 | 1,229,435 | 15,222,726 | WP Fuel-6: Test Detail Line 76 |
| 15 | Fuel Oil | 501 | - | - | - | - | - | - | |
| 16 | Nuclear | 518 | 1,780,888 | 1,459,896 | 1,806,661 | 1,806,661 | 1,458,867 | 19,306,622 | WP Fuel-6: Test Detail Line 201 |
| 17 | Cost of Fuel | | 6,048,583 | 9,762,885 | 20,377,929 | 22,780,331 | 14,579,635 | 159,356,272 | |
| 18 | | | | | | | | | |
| 19 | Cost of Fuel ($/MMBtu) | | 1.56 | 1.86 | 2.36 | 2.61 | 2.33 | 2.40 | Line 17 / (H2-Test Lines 10 + Line 15 + line 25) |
| 20 | | | | | | | | | |
| 21 | | | | | | | | | |
| 22 | **Generation by Type (MWh)** | | | | | | | | |
| 23 | | | | | | | | | |
| 24 | Coal | | 76,458 | 104,640 | 121,421 | 121,421 | 114,934 | 1,191,168 | WP Fuel-6: Test Detail Line 39 |
| 25 | Natural Gas | | 127,562 | 252,448 | 580,123 | 589,009 | 349,842 | 3,419,887 | WP Fuel-6: Test Detail Line 68 + Line 192 |
| 26 | Fuel Oil | | - | - | - | - | - | - | |
| 27 | Nuclear | | 203,683 | 201,139 | 207,844 | 207,844 | 201,139 | 2,296,116 | WP Fuel-6: Test Detail Line 204 |
| 28 | | | | | | | | | |
| 29 | **New Mexico Retail Share** | | | | | | | | |
| 30 | **Cost of Fuel ($)** | | | | | | | | |
| 31 | | | | | | | | | |
| 32 | Coal | 501 | 2,942,533 | 4,146,227 | 5,014,922 | 5,132,093 | 4,737,177 | 57,824,895 | Line 12 |
| 33 | Natural Gas | 547 | 1,225,536 | 3,365,684 | 11,308,790 | 13,224,823 | 7,154,156 | 67,002,028 | Line 13 |
| 34 | Natural Gas | 501 | 99,625 | 791,077 | 2,247,556 | 2,616,755 | 1,229,435 | 15,222,726 | Line 14 |
| 35 | Fuel Oil | 501 | - | - | - | - | - | - | Line 15 |
| 36 | Nuclear | 518 | 1,780,888 | 1,459,896 | 1,806,661 | 1,806,661 | 1,458,867 | 19,306,622 | Line 16 |
| 37 | Cost of Fuel | | 6,048,583 | 9,762,885 | 20,377,929 | 22,780,331 | 14,579,635 | 159,356,272 | Line 32 + 33 + 34 + 35 + 36 |
| 38 | | | | | | | | | |
| 39 | Cost of Fuel ($/MMBtu) | | 1.56 | 1.86 | 2.36 | 2.61 | 2.33 | 2.40 | Line 19 |
| 40 | **Generation by Type (MWh)** | | | | | | | | |
| 41 | | | | | | | | | |
| 42 | Coal | | 76,458 | 104,640 | 121,421 | 121,421 | 114,934 | 1,191,168 | Line 24 |
| 43 | Natural Gas | | 127,562 | 252,448 | 580,123 | 589,009 | 349,842 | 3,419,887 | Line 25 |
| 44 | Fuel Oil | | - | - | - | - | - | - | Line 26 |
| 45 | Nuclear | | 203,683 | 201,139 | 207,844 | 207,844 | 201,139 | 2,296,116 | Line 27 |

Required reports

# PNM Q Series Schedules

Schedule Q-1: Load research program

Schedule Q-2: Description of company

Schedule Q-3: Annual Report to stockholders

Schedule Q-4: Reports to the Securities and Exchange Commission

Schedule Q-5: Form 1 reports

Schedule Q-6: Opinion of independent public accountants

# PNM Schedule Q-1

Load Research Program

**Public Service Company of New Mexico**
**Schedule Q-1**
**Load Research Program**
**Base Period Ending 6/30/2026**
**Test Period Ending 09/30/2028**
**This schedule is sponsored by**
**PNM Witness Hayat**

PNM's Load Analysis Department maintains load samples on the Residential, Small Power, General Power and Irrigation rate classes and monitors loads on all customer accounts with demand greater than 250 kW. PNM collects load data at five and fifteen-minute interval levels and performs analysis at hourly increments. The energy usage for these customer accounts is monitored with electronic interval data recorders. Data from these recorders is collected and analyzed to provide class-peak, system-coincident peak, energy-split and other data by rate class. These data, modified for known and measurable changes, are incorporated into this filing in Schedule P-1, Schedule P-5 and Schedule K.

Load Research Program: Load Research selects stratified random samples for certain rate classes in PNM's service territory. Load Research stratifies the samples based upon annual average energy usage, average annual demand, or seasonal determinate energy usage profiles. PNM currently has the following load studies in progress:

- Residential – 338 sample points (stratified by seasonal energy usage profiles and distributed energy generation). This includes 154 sample points of customers with distributed generation, metered at both the generator and at usage to measure both total and net usage.
- Small Power – 493 sample points (stratified by annual average energy)
- General Power – 1128 sample points (stratified by annual average demand; census for 3D, 3E and 3F)
- Large Power – 100 % sampled (census)
- Water & Sewage – 100% sampled (census)
- Irrigation – Judgment sample design
- Large Service for Manufacturing: Primary Distribution – 100 % sampled (census)
- Large Service for Mining: Transmission – 100% sampled (census)
- Universities: Transmission – 100% sampled (census)
- Large Service for Manufacturing: 30 Mw or higher – 100% sampled (census)
- Special Service Rate - Renewable Energy Resources: 100% sampled (census)

Load Research's main responsibilities are to provide data for cost of service, rate design, rate analysis, and other pricing studies. The summarized energy and demand data are used to allocate retail costs in the COST™ Model. Energy and demand data by rate class are used to estimate the class contribution to the Retail and Total System peak demand, also known as the class coincident peak demand. The class load is also used for allocating costs to rate classes and developing tariffs based on energy and demand usage. Also, given the type of data it collects and analyzes, Load Research provides support to load forecasting, distribution planning, transmission planning, and provides load profile data to retail customers and other internal groups.

# PNM Schedule Q-2

Description of company

**PUBLIC SERVICE COMPANY OF NEW MEXICO**

Description of the Company

---

Public Service Company of New Mexico ("PNM" or "Company") is a public utility within the State of New Mexico. PNM was founded in 1917 as the Albuquerque Gas and Electric Co. The Company sold its natural gas utility to New Mexico Gas Company in 2009. PNM is a subsidiary of TXNM Energy, Inc., an investor-owned energy holding company based in Albuquerque. PNM's electric business activity includes the generation, transmission, and sale of electricity in the wholesale market.

PNM provides electricity to more than 560,000 residential and business customers in Greater Albuquerque, Rio Rancho, Los Lunas, Belen, Santa Fe, Las Vegas, Alamogordo, Ruidoso, Silver City, Deming, Bayard, Lordsburg, and Clayton. The Company also serves the New Mexico tribal communities of the Tesuque, Cochiti, Santo Domingo, San Felipe, Santa Ana, Sandia, Isleta, and Laguna Pueblos.

---

This schedule is sponsored by PNM witness Sanders

## President and CEO

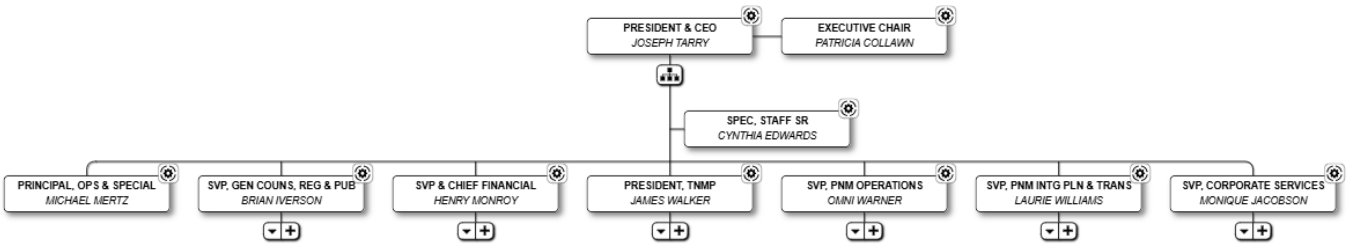


## General Counsel and Secretary

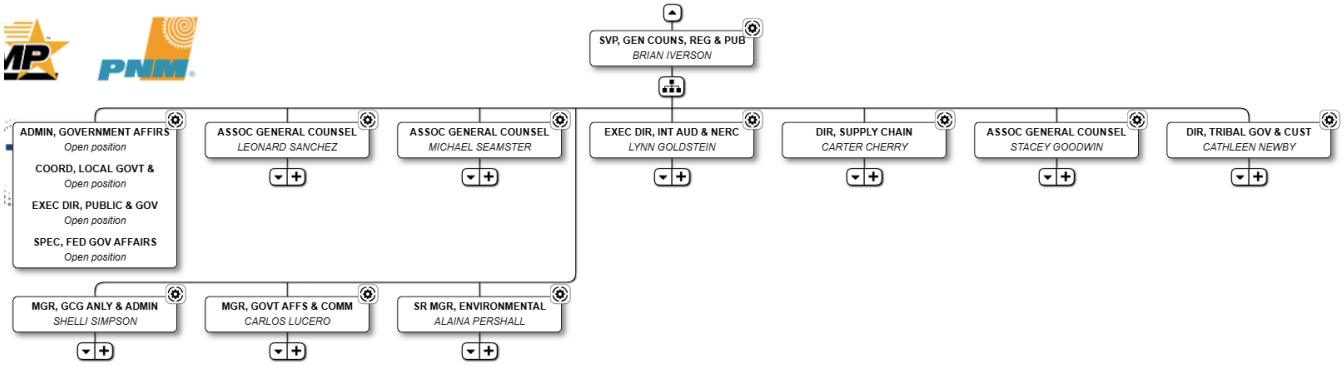


## Chief Financial Officer

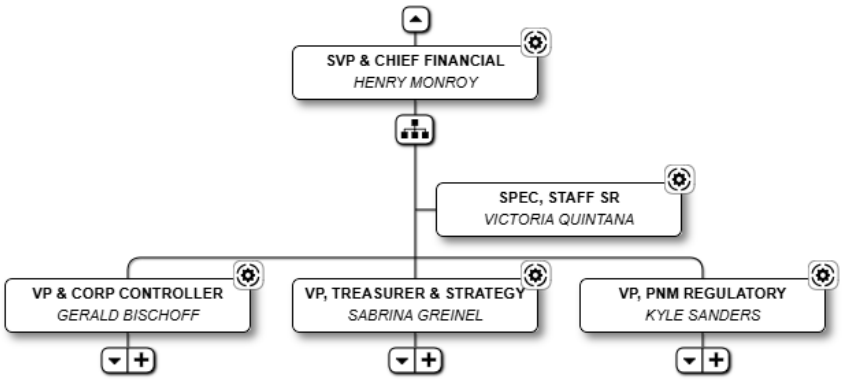


This schedule is sponsored by PNM witness Sanders

## Senior Vice President, PNM Operations

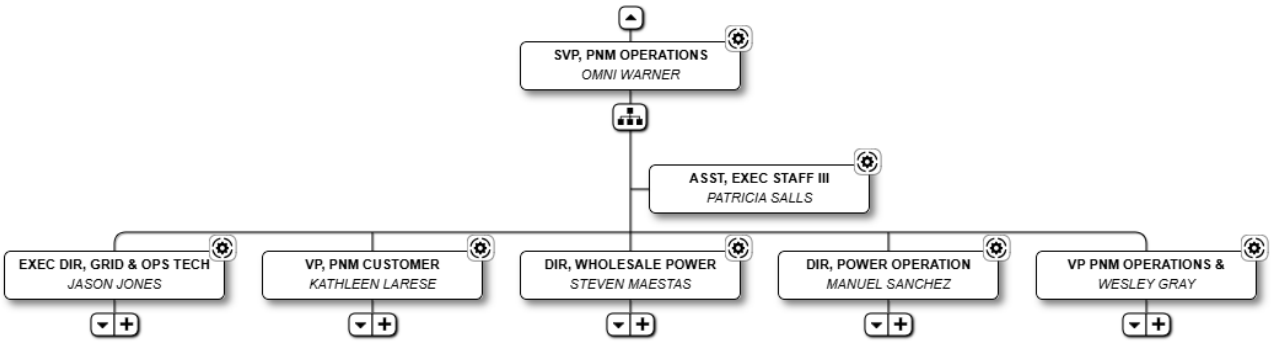


## Senior Vice President, PNM Integrated Planning and Transmission Development

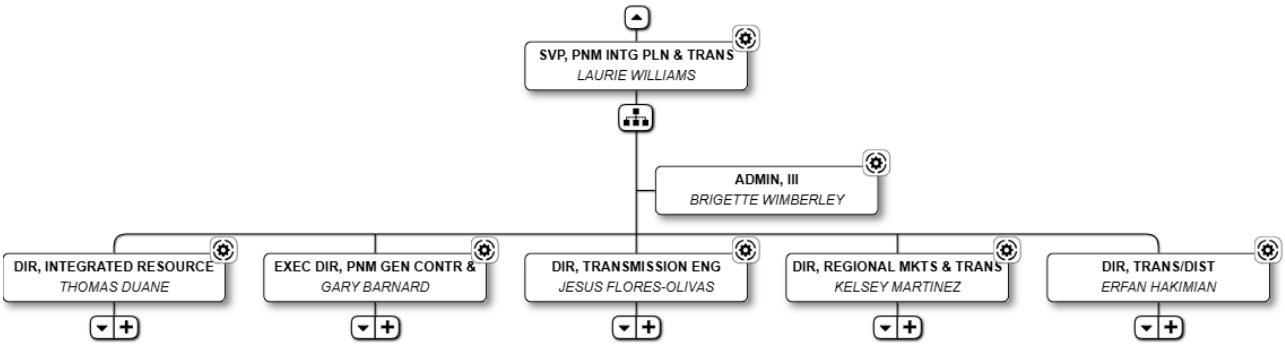


## Senior Vice President, Corporate Services

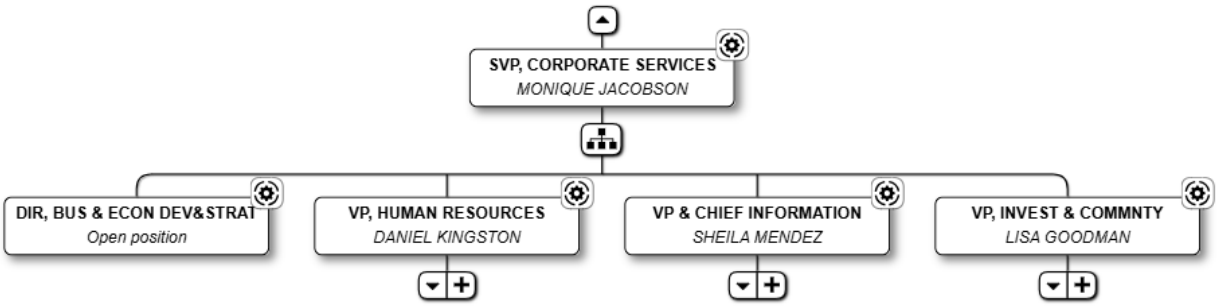


This schedule is sponsored by PNM witness Sanders

# PNM Schedule Q-3

Annual Report to Stockholders

# LETTER TO SHAREHOLDERS



My fellow shareholders,

It is a defining time for our industry, as energy needs are rapidly evolving. Our achievements in 2025 show that we are changing the way we think, plan and work to meet those needs. One thing that isn't changing: our commitment to providing customers with reliable, affordable energy.

We have a growing need for capital, and as we look ahead, we know that we can continue our commitments with the financial support of Blackstone Infrastructure. Our proposed transaction offers significant benefits, protections and opportunities for our employees, customers and communities. While we work through the remaining regulatory approvals, we remain focused on carrying out our strategic investment plans.

In Texas, our first System Resiliency Plan is underway, with three years of investments to strengthen our distribution grid and mitigate various risks to the safe and reliable operation of our system, including increased vegetation management and wildfire mitigation efforts. TNMP continued to experience unprecedented growth with a 28% increase in its system peak in 2025. Our teams are also growing stronger to respond to these increased needs.

In New Mexico, we continued to advance PNM's transition to carbon-free generation, delivering 80% clean energy to customers in 2025 and securing approval for the addition of another 450 megawatts as system needs grow. Grid Modernization plans are bringing new technologies to PNM customers beginning this year, improving the way we provide reliable service to customers and opening the door for future grid solutions. We achieved a record $117 million annual customer savings by participating in regional markets to better utilize our resources, and we remain focused on transmission investments to expand these opportunities.

Across both utilities, our core values of Safety, Caring and Integrity shine through. We're expanding our training efforts with a focus on developing the next generation of line workers and skilled trades professionals in a culture that emphasizes safety and accountability. We continue to engage with the communities most exposed to wildfire risks, sharing information and best practices that prioritize safety and foster preparedness. Our community giving efforts, including our company Foundation, are supported by employees who also stepped up in record levels to participate in Day of Service events and volunteer their own time to non-profit organizations.

On behalf of our teams across Texas and New Mexico, thank you. Your support has been essential to our progress and has created the foundation for the opportunities ahead. We are grateful for your continued confidence in our path forward.

Sincerely,

Pat Collawn
Executive Chair

TXNM ENERGY PNM TNMP

# Customers First. A Year of Impact.

Delivered **80% carbon-free electricity** to our customers as we transition to **100% carbon free**.

## Maximized renewables and reduced carbon dioxide

through the Western Energy Imbalance Market contributing to

**$265 million in PNM customers fuel savings** since 2021.

## Advanced PNM's clean energy portfolio

by **securing unanimous approval** for **617 MW** of **new 2028 resources** and integrating **465 MW** of **solar and storage**, including **New Mexico's first community solar facilities**.

Enabled a **28% increase in TNMP system peak demand** and implemented **TNMP's first System Resiliency Plan** to benefit customers through enhanced resiliency of the distribution system.

## Strengthened wildfire mitigation

in Texas and New Mexico through new **innovative technologies and partnerships** while advancing a **Public Safety Power Shutoff plan** in high fire risk areas in New Mexico.

## PNM ENERGY EFFICIENCY PROGRAMS

Almost **9 billion** kilowatt-hours of electricity saved since programs began in 2007 – enough to power **1,250,000 homes** for a year.

**2.5 billion** gallons of water saved - enough to fill approximately 19.7 billion 16-ounce water bottles.

Kept an estimated **4 million metric** tons of carbon dioxide out of the air - equivalent to keeping 935,000 gasoline powered cars off the road for one year.

# Customers First. A Year of Impact.

Assisted more than **6,500 families** through the **PNM Good Neighbor Fund.**

Contributed **$3.8 million** to **New Mexico** & **Texas** non-profits and community partners.

**Mobilized more than 640 employees** for **Day of Service** **volunteering**, deepening our **connection to the communities** we serve.

**Expanded training** to develop the next generation of line workers with **95 active apprentices** and **35 new high school student graduates** of the PNM Power Pros trades program.

PNM POWER PROS

## Trained ~30 pre-apprentices

through a **community college lineworker program**, giving students **hands-on skills** and a **direct pathway** into **high-demand utility careers.**




## Connected more than 200 homes

on the Navajo Nation to the electric grid for the first time, totaling more than **1,000 homes since 2019** as part of **Light Up Navajo.**

## TNMP ENERGY EFFICIENCY PROGRAMS

Since 2002,
**317 million kilowatt-hours**
of electricity saved – enough to power 44,389 homes for a year.

**$71.3 million**
in customer incentives and kept an estimated **213,005 metric tons** of carbon dioxide out of the air – equivalent of greenhouse gas emissions from 49,685 gasoline-powered cars for a year.

# TXNM ENERGY, INC. AND SUBSIDIARIES

PNM is a regulated utility in New Mexico with operations primarily engaged in the generation, transmission and distribution of electricity. TNMP is a regulated utility operating in Texas, providing transmission and distribution services. The graph below assumes that $100 was invested on December 31, 2020, in TXNM Energy common stock, the S&P 500 Index and the EEI Peer Index, and all dividends were reinvested through December 31, 2025. The comparisons in the performance graph do not reflect current market conditions and are not intended to forecast or be indicative of possible future performance of our common stock.

## COMPARISON OF 5-YEAR CUMULATIVE TOTAL RETURN

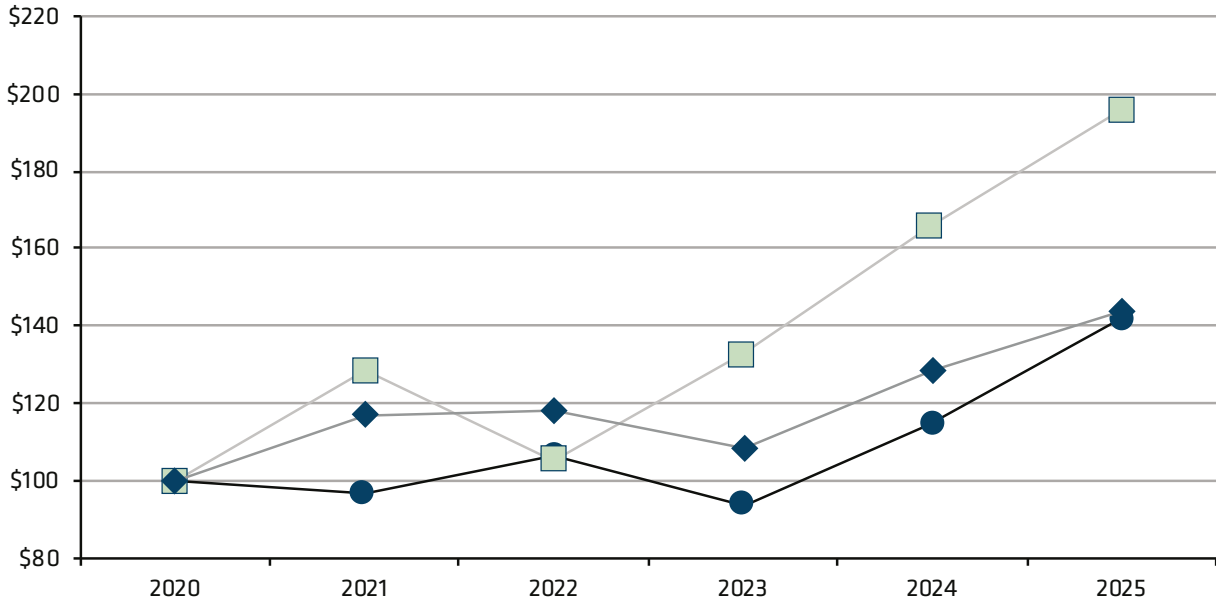


| | 2020 | 2021 | 2022 | 2023 | 2024 | 2025 |
|---|---|---|---|---|---|---|
| TXNM Energy | $100.00 | $96.52 | $106.36 | $93.62 | $115.04 | $142.01 |
| S&P 500 Index | $100.00 | $128.68 | $105.36 | $133.03 | $166.18 | $195.86 |
| EEI Index | $100.00 | $117.12 | $118.47 | $108.16 | $128.82 | $143.83 |

*Data Source:* Bloomberg; except EEI Index, source: EEI website

Historical performance does not necessarily predict future results. TXNM Energy's common stock is traded on the NYSE.

### SAFE HARBOR STATEMENT UNDER THE PRIVATE SECURITIES LITIGATION REFORM ACT OF 1995

Statements made in this letter that relate to future events, or our expectations, projections, estimates, intentions, goals, targets, and strategies, including the proposed Blackstone Infrastructure Merger, are made pursuant to the Private Securities Litigation Reform Act of 1995. Readers are cautioned that all forward-looking statements are based upon current expectations and estimates and apply only as of the date of this letter. We assume no obligation to update this information.

Because actual results may differ materially from those expressed or implied by these forward-looking statements, we caution readers not to place undue reliance on these statements. Our business, financial condition, cash flows, and operating results are influenced by many factors, which are often beyond our control, that can cause actual results to differ from those expressed or implied by the forward-looking statements. We describe risks and uncertainties that can cause actual results and events to differ materially in the "Risk Factors," "Quantitative and Qualitative Disclosures about Market Risk," and "Management's Discussion and Analysis" sections of our Forms 10-K and 10-Q filed with the SEC.

# PNM Schedule Q-4

Reports to the Securities and Exchange Commission

Schedule Q-4 Reports to the Securities and Exchange Commission

# June 30, 2026

Attachments to this document are available to the public and can be found at *https://www.txnmenergy.com/investors/financial-information/sec-filings.aspx* or can be retrieved from the NMPRC Records website.

Table of Contents

**UNITED STATES**
**SECURITIES AND EXCHANGE COMMISSION**
Washington, D.C. 20549

**FORM 10-Q**

(Mark One)

☒ QUARTERLY REPORT PURSUANT TO SECTION 13 OR 15(d) OF THE SECURITIES EXCHANGE ACT OF 1934

**For the quarterly period ended June 30, 2026**

☐ TRANSITION REPORT PURSUANT TO SECTION 13 OR 15(d) OF THE SECURITIES EXCHANGE ACT OF 1934

**For the transition period from _____ to _____**

Name of Registrant, State of Incorporation, Address Of Principal Executive Offices, Telephone Number, Commission File No., IRS Employer Identification No.

**TXNM Energy, Inc.**
(A New Mexico Corporation)
414 Silver Ave. SW
Albuquerque, New Mexico 87102-3289
Telephone Number - (505) 241-2700
Commission File No. - 001-32462
IRS Employer Identification No. - 85-0468296

**Public Service Company of New Mexico**
(A New Mexico Corporation)
414 Silver Ave. SW
Albuquerque, New Mexico 87102-3289
Telephone Number - (505) 241-2700
Commission File No. - 001-06986
IRS Employer Identification No. - 85-0019030

**Texas-New Mexico Power Company**
(A Texas Corporation)
577 N. Garden Ridge Blvd.
Lewisville, Texas 75067
Telephone Number - (972) 420-4189
Commission File No. - 002-97230
IRS Employer Identification No. - 75-0204070

---

Securities registered pursuant to Section 12(b) of the Act:

| Registrant | Title of each class | Trading Symbol(s) | Name of exchange on which registered |
|---|---|---|---|
| TXNM Energy, Inc. | Common Stock, no par value | TXNM | New York Stock Exchange |

Indicate by check mark whether each registrant (1) has filed all reports required to be filed by Section 13 or 15(d) of the Securities Exchange Act of 1934 during the preceding 12 months (or for such shorter period that the registrant was required to file such reports), and (2) has been subject to such filing requirements for the past 90 days.

| | | | | |
|---|---|---|---|---|
| TXNM Energy, Inc. (“TXNM”) | Yes | ☑ | No | ☐ |
| Public Service Company of New Mexico (“PNM”) | Yes | ☑ | No | ☐ |
| Texas-New Mexico Power Company (“TNMP”) | Yes | ☐ | No | ☑ |

(NOTE: As a voluntary filer, not subject to the filing requirements, TNMP filed all reports under Section 13 or 15(d) of the Securities Exchange Act of 1934 during the preceding 12 months.)

Table of Contents

Indicate by check mark whether each registrant has submitted electronically every Interactive Data File required to be submitted pursuant to Rule 405 of Regulation S-T during the preceding 12 months (or for such shorter period that the registrant was required to submit such files).

| | | | | |
|---|---|---|---|---|
| TXNM | Yes | ☑ | No | ☐ |
| PNM | Yes | ☑ | No | ☐ |
| TNMP | Yes | ☑ | No | ☐ |

Indicate by check mark whether registrant is a large accelerated filer, an accelerated filer, a non-accelerated filer, smaller reporting company, or an emerging growth company. See the definitions of "large accelerated filer," "accelerated filer," "smaller reporting company," and "emerging growth company" in Rule 12b-2 of the Exchange Act.

| | Large accelerated filer | Accelerated filer | Non-accelerated filer | Smaller reporting company | Emerging growth company |
|---|---|---|---|---|---|
| TXNM | ☑ | ☐ | ☐ | ☐ | ☐ |
| | Large accelerated filer | Accelerated filer | Non-accelerated filer | Smaller reporting company | Emerging growth company |
| PNM | ☐ | ☐ | ☑ | ☐ | ☐ |
| | Large accelerated filer | Accelerated filer | Non-accelerated filer | Smaller reporting company | Emerging growth company |
| TNMP | ☐ | ☐ | ☑ | ☐ | ☐ |

If an emerging growth company, indicate by check mark if the registrant has elected not to use the extended transition period for complying with any new or revised financial accounting standards provided pursuant to Section 13(a) of the Exchange Act. ☐

Indicate by check mark whether any of the registrants is a shell company (as defined in Rule 12b-2 of the Exchange Act). Yes ☐ No ☑

As of July 24, 2026, 103,046,111 shares of common stock, no par value per share, of TXNM were outstanding.

The total number of shares of common stock of PNM, no par value per share, outstanding as of July 24, 2026, was 39,117,799 all held by TXNM (and none held by non-affiliates).

The total number of shares of common stock of TNMP, $10 par value per share, outstanding as of July 24, 2026, was 6,358 all held indirectly by TXNM (and none held by non-affiliates).

**PNM AND TNMP MEET THE CONDITIONS SET FORTH IN GENERAL INSTRUCTIONS (H) (1) (a) AND (b) OF FORM 10-Q AND ARE THEREFORE FILING THIS FORM WITH THE REDUCED DISCLOSURE FORMAT PURSUANT TO GENERAL INSTRUCTION (H) (2).**

This combined Form 10-Q is separately filed by TXNM, PNM, and TNMP. Information contained herein relating to any individual registrant is filed by such registrant on its own behalf. Each registrant makes no representation as to information relating to the other registrants. When this Form 10-Q is incorporated by reference into any filing with the SEC made by TXNM, PNM, or TNMP, as a registrant, the portions of this Form 10-Q that relate to each other registrant are not incorporated by reference therein.

Table of Contents

**TXNM ENERGY, INC. AND SUBSIDIARIES**
**PUBLIC SERVICE COMPANY OF NEW MEXICO AND SUBSIDIARIES**
**TEXAS-NEW MEXICO POWER COMPANY AND SUBSIDIARIES**

**INDEX**


| | Page No. |
|---|---|
| **GLOSSARY** | 4 |
| **PART I. FINANCIAL INFORMATION** | |
| **ITEM 1. FINANCIAL STATEMENTS (UNAUDITED)** | |
| **TXNM ENERGY, INC. AND SUBSIDIARIES** | |
| Condensed Consolidated Statements of Earnings | 7 |
| Condensed Consolidated Statements of Comprehensive Income | 8 |
| Condensed Consolidated Statements of Cash Flows | 9 |
| Condensed Consolidated Balance Sheets | 11 |
| Condensed Consolidated Statements of Changes in Equity | 13 |
| **PUBLIC SERVICE COMPANY OF NEW MEXICO AND SUBSIDIARIES** | |
| Condensed Consolidated Statements of Earnings | 14 |
| Condensed Consolidated Statements of Comprehensive Income | 15 |
| Condensed Consolidated Statements of Cash Flows | 16 |
| Condensed Consolidated Balance Sheets | 18 |
| Condensed Consolidated Statements of Changes in Equity | 20 |
| **TEXAS-NEW MEXICO POWER COMPANY AND SUBSIDIARIES** | |
| Condensed Consolidated Statements of Earnings | 21 |
| Condensed Consolidated Statements of Cash Flows | 22 |
| Condensed Consolidated Balance Sheets | 23 |
| Condensed Consolidated Statements of Changes in Common Stockholder’s Equity | 25 |
| **NOTES TO CONDENSED CONSOLIDATED FINANCIAL STATEMENTS** | 26 |
| **ITEM 2. MANAGEMENT’S DISCUSSION AND ANALYSIS OF FINANCIAL CONDITION AND RESULTS OF OPERATIONS** | 75 |
| **ITEM 3. QUANTITATIVE AND QUALITATIVE DISCLOSURES ABOUT MARKET RISK** | 107 |
| **ITEM 4. CONTROLS AND PROCEDURES** | 109 |
| **PART II. OTHER INFORMATION** | |
| **ITEM 1. LEGAL PROCEEDINGS** | 110 |
| **ITEM 1A. RISK FACTORS** | 110 |
| **ITEM 5. OTHER INFORMATION** | 110 |
| **ITEM 6. EXHIBITS** | 110 |
| **SIGNATURE** | 112 |

Table of Contents

**GLOSSARY**

Definitions:

| | |
|---|---|
| 2024 Rate Change | PNM's request for a general increase in electric rates filed with the NMPRC on December 5, 2022, using a calendar year 2024 FTY |
| 2025 Rate Request | PNM's request for a general increase in electric rates filed with the NMPRC on June 14, 2024, using a FTY beginning July 1, 2025 |
| 2028 Resource Application | PNM's November 22, 2024, application with the NMPRC for approval of resources to be available for the 2028 summer peak |
| ACE Rule | Affordable Clean Energy Rule |
| AFUDC | Allowance for Funds Used During Construction |
| AOCI | Accumulated Other Comprehensive Income |
| APS | Arizona Public Service Company, the operator and a co-owner of PVNGS and Four Corners |
| ARO | Asset Retirement Obligation |
| ASU | Accounting Standards Update |
| BESS | Battery Energy Storage System |
| Blackstone Infrastructure | Blackstone Infrastructure Partners L.P. |
| Board | Board of Directors of TXNM |
| CAA | Clean Air Act |
| CAISO | California Independent System Operator |
| Carbon Pollution Standards | Carbon Pollution Standards established by the EPA on August 3, 2015 |
| CCN | Certificate of Convenience and Necessity |
| CCR | Coal Combustion Residuals |
| CCS | Carbon Capture and Storage/Sequestration |
| CIAC | Contributions in Aid of Construction |
| $CO_2$ | Carbon Dioxide |
| CODM | Chief Operating Decision Maker |
| Community Solar Act | Senate Bill 84 effective June 18, 2021 |
| Convertible Notes | TXNM's $549.8 million junior subordinated convertible notes issued on June 10, 2024, and June 21, 2024 |
| DC Circuit | United States Court of Appeals for the District of Columbia Circuit |
| DCRF | TNMP's applications for a distribution cost recovery factor |
| DOE | United States Department of Energy |
| EDAM | Extended Day Ahead Market |
| EEI | Edison Electric Institute, an association representing all U.S. investor-owned electric companies |
| Effective Time | The time the Merger is consummated |
| EGU | Electric Generating Unit |
| EIM | Western Energy Imbalance Market developed and operated by CAISO |
| ELG | Effluent Limitation Guidelines |
| Energy Transition Charge(s) | Rate rider established to collect non-bypassable customer charges for repayment of the ETBC I Securitized Bonds |
| EPA | United States Environmental Protection Agency |
| ERCOT | Electric Reliability Council of Texas |
| ESA(s) | Energy Storage Agreement(s) |
| ETA | The New Mexico Energy Transition Act |
| ETBC I | PNM Energy Transition Bond Company I, LLC, formed on August 25, 2023 |
| ETBC I Securitized Bonds | On November 15, 2023, ETBC I issued $343.2 million aggregate principal amount of its senior secured energy transition bonds, Series A in two tranches |
| EUEA | The New Mexico Efficient Use of Energy Act |
| EV | Electric Vehicle |
| Exchange Act | Securities Exchange Act of 1934, as amended |
| FASB | Financial Accounting Standards Board |
| FCC | Federal Communications Commission |
| FERC | Federal Energy Regulatory Commission |
| FIP | Federal Implementation Plan |
| FMB | First Mortgage Bond |
| Four Corners | Four Corners Power Plant |
| Four Corners CSA | Four Corners' coal supply contract with NTEC |
| FPPAC | Fuel and Purchased Power Adjustment Clause |
| FTY | Future Test Year |

Table of Contents

| | |
|---|---|
| GAAP | Generally Accepted Accounting Principles in the United States of America |
| GHG | Greenhouse Gas |
| Grid Modernization Plan | PNM's NMPRC approved plan for grid modernization that includes investments of approximately $344 million for the first six years of a broader 11-year strategy |
| GWh | Gigawatt hours |
| HSR | Hart-Scott-Rodino Antitrust Improvements Act |
| INDC | Intended Nationally Determined Contribution |
| IRA | Inflation Reduction Act of 2022 |
| IRP | Integrated Resource Plan |
| IRS | Internal Revenue Service |
| ISFSI | Independent Spent Fuel Storage Installation |
| kV | Kilovolt |
| KW | Kilowatt |
| KWh | Kilowatt Hour |
| MD&A | Management's Discussion and Analysis of Financial Condition and Results of Operations |
| Merger | The merger of TXNM pursuant to the Merger Agreement, with TXNM surviving as a direct, wholly-owned subsidiary of Parent (an affiliate of Blackstone Infrastructure Partners L.P.) |
| Merger Agreement | The Agreement and Plan of Merger, dated May 18, 2025, by and among TXNM, Parent, and Merger Sub |
| Merger Sub | Troy Merger Sub Inc., a New Mexico corporation, direct subsidiary of Parent and affiliate of Blackstone Infrastructure Partners L.P., which will merge with and into TXNM at the Effective Time of the Merger |
| Meta | Meta Platforms, Inc., formerly known as Facebook Inc. |
| MMBTU | Million British Thermal Units |
| Moody's | Moody's Investor Services, Inc. |
| MW | Megawatt |
| MWh | Megawatt Hour |
| NAAQS | National Ambient Air Quality Standards |
| NAV | Net asset value |
| NDT | Nuclear Decommissioning Trusts for PVNGS |
| NM | New Mexico |
| NM 2016 Rate Case | Request for a General Increase in Electric Rates Filed by PNM on December 7, 2016 |
| NMED | New Mexico Environment Department |
| NMMMD | The Mining and Minerals Division of the New Mexico Energy, Minerals and Natural Resources Department |
| NMPRC | New Mexico Public Regulation Commission |
| NOPR | Notice of Proposed Rulemaking |
| NOx | Nitrogen Oxides |
| NPDES | National Pollutant Discharge Elimination System |
| NRC | United States Nuclear Regulatory Commission |
| NTEC | Navajo Transitional Energy Company, LLC, an entity owned by the Navajo Nation |
| OBBBA | One Big Beautiful Bill Act of 2025 |
| OCI | Other Comprehensive Income |
| OPEB | Other Post-Employment Benefits |
| OSM | United States Office of Surface Mining Reclamation and Enforcement |
| Parent | Troy ParentCo LLC, a Delaware limited liability company and an affiliate of Blackstone Infrastructure Partners L.P. |
| Paris Agreement | A legally binding international treaty on climate change adopted on December 12, 2015 |
| Pattern Wind | Pattern New Mexico Wind, LLC, an affiliate of Western Spirit and Pattern Development |
| PCRBs | Pollution Control Revenue Bonds |
| PEP | Performance Equity Plan |
| PM | Particulate Matter |
| PNM | Public Service Company of New Mexico and Subsidiaries |
| PNM New Mexico Credit Facility | PNM's $40.0 million Unsecured Revolving Credit Facility |
| PNM 2025 Term Loan | PNM's $195.0 Million Unsecured Term Loan issued on January 21, 2025 |
| PNM April 2025 Note Purchase Agreement | PNM's agreement for sale of PNM's April 2025 SUNs |
| PNM April 2025 SUNs | PNM's $300.0 million Senior Unsecured Notes issued on April 23, 2025 |
| PNM Revolving Credit Facility | PNM's $400.0 million Unsecured Revolving Credit Facility |

Table of Contents

| | |
|---|---|
| PNMR Development | PNMR Development and Management Company, an unregulated wholly-owned subsidiary of TXNM |
| PPA | Power Purchase Agreement |
| PUCT | Public Utility Commission of Texas |
| PVNGS | Palo Verde Nuclear Generating Station |
| RD | Recommended Decision |
| REA | New Mexico's Renewable Energy Act of 2004 |
| RECs | Renewable Energy Certificates |
| REP(s) | Retail Electricity Provider |
| RFP | Request for Proposal |
| ROE | Return on Equity |
| RPS | Renewable Energy Portfolio Standard |
| S&P | Standard and Poor's Ratings Services |
| SEC | United States Securities and Exchange Commission |
| Securities Act | Securities Act of 1933, as amended |
| Securitized Bonds | Energy transition bonds |
| SIP | State Implementation Plan |
| SJGS | San Juan Generating Station |
| $SO_2$ | Sulfur Dioxide |
| SOFR | Secured Overnight Financing Rate |
| SRP | TNMP's System Resiliency Plan |
| SUNs | Senior Unsecured Notes |
| TCJA | Federal tax reform legislation enacted on December 22, 2017, commonly referred to as the Tax Cuts and Jobs Act |
| TCOS | Transmission Cost of Service |
| TECA | Texas Electric Choice Act |
| TEP | Transportation Electrification Program |
| TNMP | Texas-New Mexico Power Company and Subsidiaries |
| TNMP 2018 Rate Case | TNMP's General Rate Case Application filed on May 30, 2018 |
| TNMP February 2025 Bonds | TNMP's First Mortgage Bonds issued under the TNMP February 2025 Bond Purchase Agreement |
| TNMP February 2025 Bond Purchase Agreement | TNMP's Agreement for the sale of an aggregate $140.0 Million of TNMP February 2025 Bonds |
| TNMP Revolving Credit Facility | TNMP's $300.0 million Secured Revolving Credit Facility |
| TNP | TNP Enterprises, Inc. and Subsidiaries |
| TSA(s) | Transmission Service Agreement(s) |
| TXNM | TXNM Energy, Inc. formerly known as PNM Resources, Inc. ("PNMR") |
| TXNM Revolving Credit Facility | TXNM's $300.0 million Unsecured Revolving Credit Facility |
| U.S. | The United States of America |
| U.S. Supreme Court | United States Supreme Court |
| Valencia | Valencia Energy Facility |
| VIE | Variable Interest Entity |
| WACC | Weighted average cost of capital |
| Western Spirit Line | An approximately 150-mile 345-kV transmission line |
| Westmoreland | Westmoreland Coal Company |
| WFB LOC Facility | Letter of credit arrangements with Wells Fargo Bank, N.A., entered into in August 2020 |
| WSJ LLC | Westmoreland San Juan Mining, LLC, a subsidiary of Westmoreland Mining Holdings, LLC, and current owner of San Juan Coal Company |

Table of Contents

**PART I. FINANCIAL INFORMATION**

**ITEM 1. FINANCIAL STATEMENTS**

**TXNM ENERGY, INC. AND SUBSIDIARIES**
**CONDENSED CONSOLIDATED STATEMENTS OF EARNINGS**
(Unaudited)

| | Three Months Ended June 30, | | Six Months Ended June 30, | |
|---|---|---|---|---|
| | 2026 | 2025 | 2026 | 2025 |
| | (In thousands, except per share amounts) | | | |
| **Electric Operating Revenues** | $ 548,554 | $ 502,420 | $ 1,053,536 | $ 985,212 |
| **Operating Expenses:** | | | | |
| Cost of energy | 164,139 | 167,622 | 330,631 | 336,804 |
| Administrative and general | 64,868 | 75,991 | 131,781 | 136,760 |
| Energy production costs | 25,340 | 26,081 | 49,743 | 50,627 |
| Depreciation and amortization | 114,631 | 105,235 | 226,954 | 209,786 |
| Transmission and distribution costs | 25,377 | 26,461 | 51,264 | 51,966 |
| Taxes other than income taxes | 30,897 | 28,329 | 62,850 | 54,679 |
| Total operating expenses | 425,252 | 429,719 | 853,223 | 840,622 |
| Operating income | 123,302 | 72,701 | 200,313 | 144,590 |
| **Other Income and Deductions:** | | | | |
| Interest income | 4,179 | 3,872 | 7,746 | 8,119 |
| Gains on investment securities | 24,414 | 23,556 | 15,470 | 22,315 |
| Other income | 8,111 | 5,704 | 14,968 | 10,433 |
| Other (deductions) | (2,997) | (6,481) | (4,897) | (8,739) |
| Net other income and deductions | 33,707 | 26,651 | 33,287 | 32,128 |
| **Interest Charges** | 69,343 | 72,013 | 137,938 | 135,564 |
| **Earnings before Income Taxes** | 87,666 | 27,339 | 95,662 | 41,154 |
| **Income Taxes** | 12,276 | 1,326 | 12,267 | 2,344 |
| **Net Earnings** | 75,390 | 26,013 | 83,395 | 38,810 |
| **(Earnings) Attributable to Valencia Non-controlling Interest** | (3,994) | (4,305) | (8,130) | (8,047) |
| **Preferred Stock Dividend Requirements of Subsidiary** | (132) | (132) | (264) | (264) |
| **Net Earnings Attributable to TXNM** | $ 71,264 | $ 21,576 | $ 75,001 | $ 30,499 |
| **Net Earnings Attributable to TXNM per Common Share:** | | | | |
| Basic | $ 0.64 | $ 0.22 | $ 0.68 | $ 0.32 |
| Diluted | $ 0.64 | $ 0.22 | $ 0.67 | $ 0.32 |
| **Dividends Declared per Common Share** | $ 0.4225 | $ 0.4075 | $ 0.8450 | $ 0.8150 |

The accompanying notes, as they relate to TXNM, are an integral part of these condensed consolidated financial statements.

Table of Contents

**TXNM ENERGY, INC. AND SUBSIDIARIES**
**CONDENSED CONSOLIDATED STATEMENTS OF COMPREHENSIVE INCOME**
(Unaudited)

| | Three Months Ended June 30, | | Six Months Ended June 30, | |
|---|---|---|---|---|
| | **2026** | **2025** | **2026** | **2025** |
| | (In thousands) | | | |
| **Net Earnings** | $ 75,390 | $ 26,013 | $ 83,395 | $ 38,810 |
| **Other Comprehensive Income:** | | | | |
| **Unrealized Gains on Available-for-Sale Debt Securities**: | | | | |
| Net increase in unrealized holding gains arising during the period, net of income tax (expense) of $(17), $(60), $(17), and $(128) | 49 | 177 | 50 | 376 |
| Reclassification adjustment for (gains) included in net earnings, net of income tax expense of $27, $51, $65, and $86 | (79) | (150) | (191) | (252) |
| **Pension Liability Adjustment:** | | | | |
| Reclassification adjustment for amortization of experience losses recognized as net periodic benefit cost, net of income tax (benefit) of $(150), $(349), $(367), and $(698) | 440 | 1,026 | 1,078 | 2,051 |
| **Fair Value Adjustment for Cash Flow Hedges:** | | | | |
| Change in fair market value, net of income tax (expense) benefit of $0 $633, $0, and $633 | — | (1,860) | — | (1,860) |
| Reclassification adjustment for amortization of losses recognized in net earnings, net of income tax (expense) benefit of $(12), $0, $(24), and $0 | 35 | — | 70 | — |
| **Total Other Comprehensive Income** | 445 | (807) | 1,007 | 315 |
| **Comprehensive Income** | 75,835 | 25,206 | 84,402 | 39,125 |
| **Comprehensive (Income) Attributable to Valencia Non-controlling Interest** | (3,994) | (4,305) | (8,130) | (8,047) |
| **Preferred Stock Dividend Requirements of Subsidiary** | (132) | (132) | (264) | (264) |
| **Comprehensive Income Attributable to TXNM** | $ 71,709 | $ 20,769 | $ 76,008 | $ 30,814 |

The accompanying notes, as they relate to TXNM, are an integral part of these condensed consolidated financial statements.

Table of Contents

**TXNM ENERGY, INC. AND SUBSIDIARIES**
**CONDENSED CONSOLIDATED STATEMENTS OF CASH FLOWS**
(Unaudited)

| | Six Months Ended June 30, | |
|---|---|---|
| | **2026** | **2025** |
| | (In thousands) | |
| **Cash Flows From Operating Activities:** | | |
| Net earnings | $ 83,395 | $ 38,810 |
| Adjustments to reconcile net earnings to net cash flows from operating activities: | | |
| Depreciation and amortization | 253,039 | 235,245 |
| Deferred income tax expense | 11,123 | 1,796 |
| Losses on investment securities | (15,470) | (22,315) |
| Stock based compensation expense | 4,278 | 5,266 |
| Allowance for equity funds used during construction | (10,756) | (5,266) |
| Other, net | 2,189 | 1,753 |
| Changes in certain assets and liabilities: | | |
| Accounts receivable and unbilled revenues | (18,510) | (30,921) |
| Materials, supplies, and fuel stock | (12,478) | (4,313) |
| Other current assets | (63,473) | (20,651) |
| Other assets | (59,518) | (8,211) |
| Accounts payable | (2,879) | (3,669) |
| Accrued interest and taxes | 7,985 | (19,588) |
| Other current liabilities | 15,766 | (17,140) |
| Other liabilities | 28,328 | (6,001) |
| Net cash flows from operating activities | 223,019 | 144,795 |
| | | |
| **Cash Flows From Investing Activities:** | | |
| Additions to utility plant and non-utility plant | (577,560) | (608,800) |
| Proceeds from sales of investment securities | 329,672 | 198,728 |
| Purchases of investment securities | (333,215) | (201,174) |
| Other, net | 75 | (53) |
| Net cash flows used in investing activities | (581,028) | (611,299) |

The accompanying notes, as they relate to TXNM, are an integral part of these condensed consolidated financial statements.

Table of Contents

**TXNM ENERGY, INC. AND SUBSIDIARIES**
**CONDENSED CONSOLIDATED STATEMENTS OF CASH FLOWS**
(Unaudited)

| | Six Months Ended June 30, | |
|---|---|---|
| | **2026** | **2025** |
| | (In thousands) | |
| **Cash Flows From Financing Activities:** | | |
| Short-term borrowings | $ 1,856,250 | $ 1,398,900 |
| Repayments of short-term borrowings | (1,554,650) | (1,662,500) |
| Long-term borrowings | — | 1,719,300 |
| Repayment of long-term debt | (3,601) | (1,442,706) |
| Issuance of common stock | 123,297 | 645,309 |
| Awards of common stock | (6,365) | (8,249) |
| Dividends paid | (93,057) | (75,781) |
| Valencia's transactions with its owner | (4,172) | (8,918) |
| Transmission interconnection and security deposit arrangements | 44,954 | 21,215 |
| Refunds paid under transmission interconnection and security deposit arrangements | (6,363) | (95,028) |
| Debt issuance costs and other, net | (3,252) | (9,599) |
| Net cash flows from financing activities | 353,041 | 481,943 |
| | | |
| **Change in Cash, Cash Equivalents, and Restricted Cash** | (4,968) | 15,439 |
| **Cash, Cash Equivalents, and Restricted Cash at Beginning of Period** | 31,953 | 22,085 |
| **Cash, Cash Equivalents, and Restricted Cash at End of Period** | $ 26,985 | $ 37,524 |
| | | |
| **Restricted Cash included in Other Current Assets and Other Deferred Charges on Condensed Consolidated Balance Sheets:** | | |
| At beginning of period | $ 13,697 | $ 17,587 |
| At end of period | $ 12,395 | $ 15,354 |
| | | |
| **Supplemental Cash Flow Disclosures:** | | |
| Interest paid, net of amounts capitalized | $ 119,999 | $ 132,849 |
| Income taxes paid, net | $ 2,048 | $ 2,350 |
| | | |
| **Supplemental schedule of noncash investing activities:** | | |
| Decrease in accrued plant additions | $ 45,576 | $ 53,154 |

The accompanying notes, as they relate to TXNM, are an integral part of these condensed consolidated financial statements.

Table of Contents

**TXNM ENERGY, INC. AND SUBSIDIARIES**
**CONDENSED CONSOLIDATED BALANCE SHEETS**
(Unaudited)

| | June 30, 2026 | December 31, 2025 |
|---|---|---|
| | (In thousands) | |
| **ASSETS** | | |
| **Current Assets:** | | |
| Cash and cash equivalents | $ 14,590 | $ 18,256 |
| Accounts receivable, net of allowance for credit losses of $1,573 and $1,394 | 145,410 | 151,804 |
| Unbilled revenues | 90,358 | 68,214 |
| Other receivables | 67,064 | 53,875 |
| Materials, supplies, and fuel stock | 193,794 | 181,316 |
| Regulatory assets | 91,215 | 41,785 |
| Prepaid assets | 32,582 | 28,946 |
| Income taxes receivable | 9,230 | 8,322 |
| Other current assets | 16,107 | 12,144 |
| Total current assets | 660,350 | 564,662 |
| **Other Property and Investments:** | | |
| Investment securities | 513,644 | 505,655 |
| Other investments | 228 | 302 |
| Non-utility property, net | 44,074 | 40,729 |
| Total other property and investments | 557,946 | 546,686 |
| **Utility Plant:** | | |
| Plant in service and plant held for future use | 11,902,839 | 11,592,121 |
| Less accumulated depreciation and amortization | 3,131,594 | 3,010,588 |
| | 8,771,245 | 8,581,533 |
| Construction work in progress | 787,263 | 653,206 |
| Nuclear fuel, net of accumulated amortization of $25,206 and $27,953 | 77,937 | 76,696 |
| Net utility plant | 9,636,445 | 9,311,435 |
| **Deferred Charges and Other Assets:** | | |
| Regulatory assets | 933,240 | 939,249 |
| Goodwill | 278,297 | 278,297 |
| Operating lease right-of-use assets, net of accumulated amortization | 47,935 | 108,517 |
| Other deferred charges | 393,709 | 310,439 |
| Total deferred charges and other assets | 1,653,181 | 1,636,502 |
| | $ 12,507,922 | $ 12,059,285 |

The accompanying notes, as they relate to TXNM, are an integral part of these condensed consolidated financial statements.

Table of Contents

**TXNM ENERGY, INC. AND SUBSIDIARIES**
**CONDENSED CONSOLIDATED BALANCE SHEETS**
(Unaudited)

| | June 30, 2026 | December 31, 2025 |
|---|---|---|
| | (In thousands, except share information) | |
| **LIABILITIES AND STOCKHOLDERS' EQUITY** | | |
| **Current Liabilities:** | | |
| Short-term debt | $ 483,000 | $ 181,400 |
| Current installments of long-term debt (includes $7,509 and $7,303 related to ETBC I) | 227,817 | 302,538 |
| Accounts payable | 194,608 | 243,062 |
| Customer deposits | 7,025 | 6,893 |
| Accrued interest and taxes | 132,907 | 124,014 |
| Regulatory liabilities | 14,944 | 11,022 |
| Operating lease liabilities | 7,109 | 8,969 |
| Dividends declared | 132 | 46,151 |
| Transmission interconnection arrangement liabilities | 16,745 | 15,878 |
| Other current liabilities | 100,370 | 77,610 |
| Total current liabilities | 1,184,657 | 1,017,537 |
| **Long-term Debt, net of Unamortized Premiums, Discounts, and Debt Issuance Costs (includes $320,779 and $324,531 related to ETBC I)** | 5,187,896 | 5,116,026 |
| **Deferred Credits and Other Liabilities:** | | |
| Accumulated deferred income taxes | 990,599 | 961,230 |
| Regulatory liabilities | 781,084 | 757,319 |
| Asset retirement obligations | 258,431 | 255,097 |
| Accrued pension liability and postretirement benefit cost | 6,653 | 6,736 |
| Operating lease liabilities | 34,773 | 96,735 |
| Other deferred credits | 449,892 | 389,070 |
| Total deferred credits and other liabilities | 2,521,432 | 2,466,187 |
| Total liabilities | 8,893,985 | 8,599,750 |
| **Commitments and Contingencies (Note 11)** | | |
| **Cumulative Preferred Stock of Subsidiary** | | |
| without mandatory redemption requirements ($100 stated value; 10,000,000 shares authorized; issued and outstanding 115,293 shares) | 11,529 | 11,529 |
| **Equity:** | | |
| TXNM common stockholders' equity: | | |
| Common stock (no par value; 200,000,000 shares authorized; issued and outstanding 111,045,010 and 108,921,356 shares) | 2,685,140 | 2,563,930 |
| Accumulated other comprehensive income (loss), net of income taxes | (25,809) | (26,816) |
| Retained earnings | 895,131 | 866,904 |
| Total TXNM common stockholders' equity | 3,554,462 | 3,404,018 |
| Non-controlling interest in Valencia | 47,946 | 43,988 |
| Total equity | 3,602,408 | 3,448,006 |
| | $ 12,507,922 | $ 12,059,285 |

The accompanying notes, as they relate to TXNM, are an integral part of these condensed consolidated financial statements.

Table of Contents

**TXNM ENERGY, INC. AND SUBSIDIARIES**
**CONDENSED CONSOLIDATED STATEMENTS OF CHANGES IN EQUITY**
(Unaudited)

| | Attributable to TXNM | | | | | |
|---|---|---|---|---|---|---|
| | Common Stock | AOCI | Retained Earnings | Total TXNM Common Stockholders' Equity | Non-controlling Interest in Valencia | Total Equity |
| | (In thousands) | | | | | |
| **Balance at March 31, 2026** | $ 2,667,342 | $ (26,254) | $ 823,867 | $ 3,464,955 | $ 48,597 | $ 3,513,552 |
| Net earnings before subsidiary preferred stock dividends | — | — | 71,396 | 71,396 | 3,994 | 75,390 |
| Total other comprehensive income | — | 445 | — | 445 | — | 445 |
| Subsidiary preferred stock dividends | — | — | (132) | (132) | — | (132) |
| Awards of common stock | (980) | — | — | (980) | — | (980) |
| Issuance of common stock | 19,610 | — | — | 19,610 | — | 19,610 |
| Stock based compensation expense | (832) | — | — | (832) | — | (832) |
| Valencia's transactions with its owner | — | — | — | — | (4,645) | (4,645) |
| **Balance at June 30, 2026** | $ 2,685,140 | $ (25,809) | $ 895,131 | $ 3,554,462 | $ 47,946 | $ 3,602,408 |
| | | | | | | |
| **Balance at December 31, 2025** | $ 2,563,930 | $ (26,816) | $ 866,904 | $ 3,404,018 | $ 43,988 | $ 3,448,006 |
| Net earnings before subsidiary preferred stock dividends | — | — | 75,265 | 75,265 | 8,130 | 83,395 |
| Total other comprehensive income | — | 1,007 | — | 1,007 | — | 1,007 |
| Subsidiary preferred stock dividends | — | — | (264) | (264) | — | (264) |
| Dividends declared on common stock | — | — | (46,774) | (46,774) | — | (46,774) |
| Awards of common stock | (6,365) | — | — | (6,365) | — | (6,365) |
| Issuance of common stock | 123,297 | — | — | 123,297 | — | 123,297 |
| Stock based compensation expense | 4,278 | — | — | 4,278 | — | 4,278 |
| Valencia's transactions with its owner | — | — | — | — | (4,172) | (4,172) |
| **Balance at June 30, 2026** | $ 2,685,140 | $ (25,809) | $ 895,131 | $ 3,554,462 | $ 47,946 | $ 3,602,408 |
| | | | | | | |
| **Balance at March 31, 2025** | $ 1,721,109 | $ (74,586) | $ 857,812 | $ 2,504,335 | $ 46,372 | $ 2,550,707 |
| Net earnings before subsidiary preferred stock dividends | — | — | 21,708 | 21,708 | 4,305 | 26,013 |
| Total other comprehensive income (loss) | — | (807) | — | (807) | — | (807) |
| Subsidiary preferred stock dividends | — | — | (132) | (132) | — | (132) |
| Awards of common stock | (1,942) | — | — | (1,942) | — | (1,942) |
| Issuance of common stock | 645,309 | | | 645,309 | | 645,309 |
| Stock based compensation expense | 2,294 | — | — | 2,294 | — | 2,294 |
| Valencia's transactions with its owner | — | — | — | — | (4,648) | (4,648) |
| **Balance at June 30, 2025** | $ 2,366,770 | $ (75,393) | $ 879,388 | $ 3,170,765 | $ 46,029 | $ 3,216,794 |
| | | | | | | |
| **Balance at December 31, 2024** | $ 1,724,444 | $ (75,708) | $ 887,649 | $ 2,536,385 | $ 46,900 | $ 2,583,285 |
| Net earnings before subsidiary preferred stock dividends | — | — | 30,763 | 30,763 | 8,047 | 38,810 |
| Total other comprehensive income | — | 315 | — | 315 | — | 315 |
| Subsidiary preferred stock dividends | — | — | (264) | (264) | — | (264) |
| Dividends declared on common stock | — | — | (38,760) | (38,760) | — | (38,760) |
| Awards of common stock | (8,249) | — | — | (8,249) | — | (8,249) |
| Issuance of common stock | 645,309 | — | — | 645,309 | — | 645,309 |
| Stock based compensation expense | 5,266 | — | — | 5,266 | — | 5,266 |
| Valencia's transactions with its owner | — | — | — | — | (8,918) | (8,918) |
| **Balance at June 30, 2025** | $ 2,366,770 | $ (75,393) | $ 879,388 | $ 3,170,765 | $ 46,029 | $ 3,216,794 |

The accompanying notes, as they relate to TXNM, are an integral part of these condensed consolidated financial statements.

Table of Contents

**PUBLIC SERVICE COMPANY OF NEW MEXICO AND SUBSIDIARIES**
**A WHOLLY-OWNED SUBSIDIARY OF TXNM ENERGY, INC.**
**CONDENSED CONSOLIDATED STATEMENTS OF EARNINGS**
(Unaudited)

| | Three Months Ended June 30, | | Six Months Ended June 30, | |
|---|---|---|---|---|
| | 2026 | 2025 | 2026 | 2025 |
| | (In thousands) | | | |
| **Electric Operating Revenues** | $ 361,116 | $ 338,372 | $ 691,127 | $ 671,752 |
| **Operating Expenses:** | | | | |
| Cost of energy | 120,181 | 124,336 | 243,246 | 255,290 |
| Administrative and general | 59,634 | 59,526 | 121,059 | 117,136 |
| Energy production costs | 25,340 | 26,081 | 49,743 | 50,627 |
| Depreciation and amortization | 65,310 | 60,778 | 129,420 | 120,581 |
| Transmission and distribution costs | 15,374 | 15,750 | 33,316 | 31,576 |
| Taxes other than income taxes | 16,294 | 15,262 | 33,219 | 28,565 |
| Total operating expenses | 302,133 | 301,733 | 610,003 | 603,775 |
| Operating income | 58,983 | 36,639 | 81,124 | 67,977 |
| **Other Income and Deductions:** | | | | |
| Interest income | 3,911 | 3,729 | 7,411 | 7,946 |
| Gains on investment securities | 24,414 | 23,556 | 15,470 | 22,315 |
| Other income | 4,028 | 3,561 | 7,260 | 5,363 |
| Other (deductions) | (2,876) | (4,301) | (3,964) | (5,819) |
| Net other income and deductions | 29,477 | 26,545 | 26,177 | 29,805 |
| **Interest Charges** | 32,335 | 31,975 | 65,364 | 61,791 |
| **Earnings before Income Taxes** | 56,125 | 31,209 | 41,937 | 35,991 |
| **Income Taxes** | 6,233 | 2,410 | 3,659 | 2,373 |
| **Net Earnings** | 49,892 | 28,799 | 38,278 | 33,618 |
| **(Earnings) Attributable to Valencia Non-controlling Interest** | (3,994) | (4,305) | (8,130) | (8,047) |
| **Net Earnings Attributable to PNM** | 45,898 | 24,494 | 30,148 | 25,571 |
| **Preferred Stock Dividend Requirements** | (132) | (132) | (264) | (264) |
| **Net Earnings Available for PNM Common Stock** | $ 45,766 | $ 24,362 | $ 29,884 | $ 25,307 |

The accompanying notes, as they relate to PNM, are an integral part of these condensed consolidated financial statements.

Table of Contents

**PUBLIC SERVICE COMPANY OF NEW MEXICO AND SUBSIDIARIES**
**A WHOLLY-OWNED SUBSIDIARY OF TXNM ENERGY, INC.**
**CONDENSED CONSOLIDATED STATEMENTS OF COMPREHENSIVE INCOME**
(Unaudited)

| | Three Months Ended June 30, | | Six Months Ended June 30, | |
|---|---|---|---|---|
| | 2026 | 2025 | 2026 | 2025 |
| | (In thousands) | | | |
| **Net Earnings (Losses)** | $ 49,892 | $ 28,799 | $ 38,278 | $ 33,618 |
| **Other Comprehensive Income:** | | | | |
| **Unrealized Gains on Available-for-Sale Debt Securities**: | | | | |
| Net increase in unrealized holding gains arising during the period, net of income tax (expense) of $(17), $(60), $(17), and $(128) | 49 | 177 | 50 | 376 |
| Reclassification adjustment for (gains) included in net earnings, net of income tax expense of $27, $51, $65, and $86 | (79) | (150) | (191) | (252) |
| **Pension Liability Adjustment:** | | | | |
| Reclassification adjustment for amortization of experience losses recognized as net periodic benefit cost, net of income tax (benefit) of $(150), $(349), $(367), and $(698) | 440 | 1,026 | 1,078 | 2,051 |
| **Total Other Comprehensive Income** | 410 | 1,053 | 937 | 2,175 |
| **Comprehensive Income (Loss)** | 50,302 | 29,852 | 39,215 | 35,793 |
| **Comprehensive (Income) Attributable to Valencia Non-controlling Interest** | (3,994) | (4,305) | (8,130) | (8,047) |
| **Comprehensive Income (Loss) Attributable to PNM** | $ 46,308 | $ 25,547 | $ 31,085 | $ 27,746 |

The accompanying notes, as they relate to PNM, are an integral part of these condensed consolidated financial statements.

Table of Contents

**PUBLIC SERVICE COMPANY OF NEW MEXICO AND SUBSIDIARIES**
**A WHOLLY-OWNED SUBSIDIARY OF TXNM ENERGY, INC.**
**CONDENSED CONSOLIDATED STATEMENTS OF CASH FLOWS**
(Unaudited)

| | Six Months Ended June 30, | |
|---|---|---|
| | **2026** | **2025** |
| | (In thousands) | |
| **Cash Flows From Operating Activities:** | | |
| Net earnings | $ 38,278 | $ 33,618 |
| Adjustments to reconcile net earnings to net cash flows from operating activities: | | |
| Depreciation and amortization | 148,577 | 134,216 |
| Deferred income tax expense | 3,659 | 2,439 |
| Losses on investment securities | (15,470) | (22,315) |
| Allowance for equity funds used during construction | (5,562) | (3,095) |
| Other, net | 2,554 | 1,900 |
| Changes in certain assets and liabilities: | | |
| Accounts receivable and unbilled revenues | (6,518) | (21,040) |
| Materials, supplies, and fuel stock | 1,207 | (375) |
| Other current assets | (11,606) | (10,205) |
| Other assets | (36,654) | 1,463 |
| Accounts payable | (3,045) | (14,257) |
| Accrued interest and taxes | 7,610 | 4,457 |
| Other current liabilities | 41,341 | 9,661 |
| Other liabilities | 6,739 | (15,943) |
| Net cash flows from operating activities | 171,110 | 100,524 |
| **Cash Flows From Investing Activities:** | | |
| Utility plant additions | (318,267) | (272,669) |
| Proceeds from sales of investment securities | 329,672 | 198,728 |
| Purchases of investment securities | (333,215) | (201,174) |
| Other, net | 73 | (62) |
| Net cash flows used in investing activities | (321,737) | (275,177) |

The accompanying notes, as they relate to PNM, are an integral part of these condensed consolidated financial statements.

Table of Contents

**PUBLIC SERVICE COMPANY OF NEW MEXICO AND SUBSIDIARIES**
**A WHOLLY-OWNED SUBSIDIARY OF TXNM ENERGY, INC.**
**CONDENSED CONSOLIDATED STATEMENTS OF CASH FLOWS**
(Unaudited)

| | Six Months Ended June 30, | |
|---|---|---|
| | **2026** | **2025** |
| | (In thousands) | |
| **Cash Flows From Financing Activities:** | | |
| Short-term borrowings | $ 703,800 | $ 627,700 |
| Repayments of short-term borrowings | (667,600) | (756,900) |
| Long-term borrowings | — | 495,000 |
| Repayment of long-term debt | (3,601) | (107,406) |
| Equity contribution from parent | 105,000 | — |
| Dividends paid | (264) | (264) |
| Valencia's transactions with its owner | (4,172) | (8,918) |
| Transmission interconnection and security deposit arrangements | 25,854 | 2,415 |
| Refunds paid under transmission interconnection and security deposit arrangements | (2,604) | (74,278) |
| Debt issuance costs and other, net | (1,296) | (2,654) |
| Net cash flows from financing activities | 155,117 | 174,695 |
| **Change in Cash, Cash Equivalents, and Restricted Cash** | 4,490 | 42 |
| **Cash, Cash Equivalents, and Restricted Cash at Beginning of Period** | 13,716 | 20,285 |
| **Cash, Cash Equivalents, and Restricted Cash at End of Period** | $ 18,206 | $ 20,327 |
| **Restricted Cash included in Other Current Assets and Other Deferred Charges on Condensed Consolidated Balance Sheets:** | | |
| At beginning of period | $ 13,697 | $ 17,587 |
| At end of period | $ 12,395 | $ 15,354 |
| **Supplemental Cash Flow Disclosures:** | | |
| Interest paid, net of amounts capitalized | $ 62,074 | $ 53,933 |
| Income taxes paid, net | $ — | $ — |
| **Supplemental schedule of noncash investing activities:** | | |
| Decrease (increase) in accrued plant additions | $ (448) | $ 11,569 |

The accompanying notes, as they relate to PNM, are an integral part of these condensed consolidated financial statements.

Table of Contents

**PUBLIC SERVICE COMPANY OF NEW MEXICO AND SUBSIDIARIES**
**A WHOLLY-OWNED SUBSIDIARY OF TXNM ENERGY, INC.**
**CONDENSED CONSOLIDATED BALANCE SHEETS**
(Unaudited)

| | June 30, 2026 | December 31, 2025 |
|---|---|---|
| | (In thousands) | |
| **ASSETS** | | |
| **Current Assets:** | | |
| Cash and cash equivalents | $ 5,811 | $ 19 |
| Accounts receivable, net of allowance for credit losses of $1,573 and $1,394 | 103,251 | 115,910 |
| Unbilled revenues | 64,941 | 48,524 |
| Other receivables | 22,470 | 33,422 |
| Affiliate receivables | 8,747 | 17,360 |
| Materials, supplies, and fuel stock | 144,456 | 145,663 |
| Regulatory assets | 19,201 | 8,499 |
| Prepaid assets | 22,034 | 18,502 |
| Income taxes receivable | 13,132 | 13,132 |
| Other current assets | 10,881 | 12,109 |
| Total current assets | 414,924 | 413,140 |
| **Other Property and Investments:** | | |
| Investment securities | 513,644 | 505,655 |
| Other investments | 228 | 302 |
| Non-utility property, net | 16,192 | 17,572 |
| Total other property and investments | 530,064 | 523,529 |
| **Utility Plant:** | | |
| Plant in service and plant held for future use | 7,486,643 | 7,260,670 |
| Less accumulated depreciation and amortization | 2,278,270 | 2,201,687 |
| | 5,208,373 | 5,058,983 |
| Construction work in progress | 408,151 | 371,119 |
| Nuclear fuel, net of accumulated amortization of $25,206 and $27,953 | 77,937 | 76,696 |
| Net utility plant | 5,694,461 | 5,506,798 |
| **Deferred Charges and Other Assets:** | | |
| Regulatory assets | 820,449 | 832,791 |
| Goodwill | 51,632 | 51,632 |
| Operating lease right-of-use assets, net of accumulated amortization | 47,136 | 107,986 |
| Other deferred charges | 319,256 | 252,256 |
| Total deferred charges and other assets | 1,238,473 | 1,244,665 |
| | $ 7,877,922 | $ 7,688,132 |

The accompanying notes, as they relate to PNM, are an integral part of these condensed consolidated financial statements.

Table of Contents

**PUBLIC SERVICE COMPANY OF NEW MEXICO AND SUBSIDIARIES**
**A WHOLLY-OWNED SUBSIDIARY OF TXNM ENERGY, INC.**
**CONDENSED CONSOLIDATED BALANCE SHEETS**
(Unaudited)

| | June 30, 2026 | December 31, 2025 |
|---|---|---|
| | (In thousands, except share information) | |
| **LIABILITIES AND STOCKHOLDER'S EQUITY** | | |
| **Current Liabilities:** | | |
| Short-term debt | $ 215,000 | $ 178,800 |
| Current installments of long-term debt (includes $7,509 and $7,303 related to ETBC I) | 227,817 | 302,538 |
| Accounts payable | 147,814 | 150,411 |
| Affiliate payables | 37,153 | 18,366 |
| Customer deposits | 7,025 | 6,893 |
| Accrued interest and taxes | 63,821 | 56,211 |
| Regulatory liabilities | 14,944 | 8,430 |
| Operating lease liabilities | 6,989 | 8,913 |
| Dividends declared | 132 | 132 |
| Transmission interconnection arrangement liabilities | 16,745 | 15,878 |
| Other current liabilities | 62,396 | 41,737 |
| Total current liabilities | 799,836 | 788,309 |
| **Long-term Debt, net of Unamortized Premiums, Discounts, and Debt Issuance Costs (includes $320,779 and $324,531 related to ETBC I)** | 2,631,441 | 2,559,359 |
| **Deferred Credits and Other Liabilities:** | | |
| Accumulated deferred income taxes | 834,008 | 813,528 |
| Regulatory liabilities | 488,204 | 488,406 |
| Asset retirement obligations | 257,656 | 254,353 |
| Accrued pension liability and postretirement benefit cost | 6,653 | 6,736 |
| Operating lease liabilities | 34,074 | 96,246 |
| Other deferred credits | 233,074 | 227,998 |
| Total deferred credits and liabilities | 1,853,669 | 1,887,267 |
| Total liabilities | 5,284,946 | 5,234,935 |
| **Commitments and Contingencies (Note 11)** | | |
| **Cumulative Preferred Stock** | | |
| without mandatory redemption requirements ($100 stated value; 10,000,000 shares authorized; issued and outstanding 115,293 shares) | 11,529 | 11,529 |
| **Equity:** | | |
| PNM common stockholder's equity: | | |
| Common stock (no par value; 40,000,000 shares authorized; issued and outstanding 39,117,799 shares) | 1,831,218 | 1,726,218 |
| Accumulated other comprehensive income (loss), net of income taxes | (24,766) | (25,703) |
| Retained earnings | 727,049 | 697,165 |
| Total PNM common stockholder's equity | 2,533,501 | 2,397,680 |
| Non-controlling interest in Valencia | 47,946 | 43,988 |
| Total equity | 2,581,447 | 2,441,668 |
| | $ 7,877,922 | $ 7,688,132 |

The accompanying notes, as they relate to PNM, are an integral part of these condensed consolidated financial statements.

Table of Contents

**PUBLIC SERVICE COMPANY OF NEW MEXICO AND SUBSIDIARIES**
**A WHOLLY-OWNED SUBSIDIARY OF TXNM ENERGY, INC.**
**CONDENSED CONSOLIDATED STATEMENTS OF CHANGES IN EQUITY**
(Unaudited)

| | Attributable to PNM | | | | | |
|---|---|---|---|---|---|---|
| | Common Stock | AOCI | Retained Earnings | Total PNM Common Stockholder's Equity | Non-controlling Interest in Valencia | Total Equity |
| | (In thousands) | | | | | |
| **Balance at March 31, 2026** | $ 1,831,218 | $ (25,176) | $ 681,283 | $ 2,487,325 | $ 48,597 | $ 2,535,922 |
| Net earnings | — | — | 45,898 | 45,898 | 3,994 | 49,892 |
| Total other comprehensive income | — | 410 | — | 410 | — | 410 |
| Dividends declared on preferred stock | — | — | (132) | (132) | — | (132) |
| Valencia's transactions with its owner | — | — | — | — | (4,645) | (4,645) |
| **Balance at June 30, 2026** | $ 1,831,218 | $ (24,766) | $ 727,049 | $ 2,533,501 | $ 47,946 | $ 2,581,447 |
| | | | | | | |
| **Balance at December 31, 2025** | $ 1,726,218 | $ (25,703) | $ 697,165 | $ 2,397,680 | $ 43,988 | $ 2,441,668 |
| Net earnings | — | — | 30,148 | 30,148 | 8,130 | 38,278 |
| Total other comprehensive income | — | 937 | — | 937 | — | 937 |
| Dividends declared on preferred stock | — | — | (264) | (264) | — | (264) |
| Equity contribution from parent | 105,000 | — | — | 105,000 | — | 105,000 |
| Valencia's transactions with its owner | — | — | — | — | (4,172) | (4,172) |
| **Balance at June 30, 2026** | $ 1,831,218 | $ (24,766) | $ 727,049 | $ 2,533,501 | $ 47,946 | $ 2,581,447 |
| **Balance at March 31, 2025** | $ 1,602,918 | $ (74,586) | $ 611,033 | $ 2,139,365 | $ 46,372 | $ 2,185,737 |
| Net earnings | — | — | 24,494 | 24,494 | 4,305 | 28,799 |
| Total other comprehensive income | — | 1,053 | — | 1,053 | — | 1,053 |
| Dividends declared on preferred stock | — | — | (132) | (132) | — | (132) |
| Valencia's transactions with its owner | — | — | — | — | (4,648) | (4,648) |
| **Balance at June 30, 2025** | $ 1,602,918 | $ (73,533) | $ 635,395 | $ 2,164,780 | $ 46,029 | $ 2,210,809 |
| | | | | | | |
| **Balance at December 31, 2024** | $ 1,602,918 | $ (75,708) | $ 610,088 | $ 2,137,298 | $ 46,900 | $ 2,184,198 |
| Net earnings | — | — | 25,571 | 25,571 | 8,047 | 33,618 |
| Total other comprehensive income | — | 2,175 | — | 2,175 | — | 2,175 |
| Dividends declared on preferred stock | — | — | (264) | (264) | — | (264) |
| Valencia's transactions with its owner | — | — | — | — | (8,918) | (8,918) |
| **Balance at June 30, 2025** | $ 1,602,918 | $ (73,533) | $ 635,395 | $ 2,164,780 | $ 46,029 | $ 2,210,809 |

The accompanying notes, as they relate to PNM, are an integral part of these condensed consolidated financial statements.

Table of Contents

**TEXAS-NEW MEXICO POWER COMPANY AND SUBSIDIARIES**
**A WHOLLY-OWNED SUBSIDIARY OF TXNM ENERGY, INC.**
**CONDENSED CONSOLIDATED STATEMENTS OF EARNINGS**
(Unaudited)

| | Three Months Ended June 30, | | Six Months Ended June 30, | |
|---|---|---|---|---|
| | 2026 | 2025 | 2026 | 2025 |
| | (In thousands) | | | |
| **Electric Operating Revenues** | $ 187,438 | $ 164,048 | $ 362,409 | $ 313,460 |
| **Operating Expenses:** | | | | |
| Cost of energy | 43,958 | 43,286 | 87,385 | 81,514 |
| Administrative and general | 13,570 | 14,994 | 28,868 | 27,035 |
| Depreciation and amortization | 39,572 | 34,926 | 78,136 | 70,139 |
| Transmission and distribution costs | 10,003 | 10,711 | 17,948 | 20,390 |
| Taxes other than income taxes | 12,751 | 11,444 | 25,850 | 22,948 |
| Total operating expenses | 119,854 | 115,361 | 238,187 | 222,026 |
| Operating income | 67,584 | 48,687 | 124,222 | 91,434 |
| **Other Income and Deductions:** | | | | |
| Interest income | 367 | 159 | 535 | 313 |
| Other income | 3,783 | 1,764 | 7,088 | 4,284 |
| Other (deductions) | 271 | (229) | (35) | (497) |
| Net other income and deductions | 4,421 | 1,694 | 7,588 | 4,100 |
| **Interest Charges** | 22,030 | 23,942 | 43,431 | 41,264 |
| **Earnings before Income Taxes** | 49,975 | 26,439 | 88,379 | 54,270 |
| **Income Taxes** | 10,041 | 5,471 | 17,755 | 11,019 |
| **Net Earnings** | $ 39,934 | $ 20,968 | $ 70,624 | $ 43,251 |

The accompanying notes, as they relate to TNMP, are an integral part of these condensed consolidated financial statements.

Table of Contents

**TEXAS-NEW MEXICO POWER COMPANY AND SUBSIDIARIES**
**A WHOLLY-OWNED SUBSIDIARY OF TXNM ENERGY, INC.**
**CONDENSED CONSOLIDATED STATEMENTS OF CASH FLOWS**
(Unaudited)

| | Six Months Ended June 30, | |
|---|---|---|
| | **2026** | **2025** |
| | (In thousands) | |
| **Cash Flows From Operating Activities:** | | |
| Net earnings | $ 70,624 | $ 43,251 |
| Adjustments to reconcile net earnings to net cash flows from operating activities: | | |
| Depreciation and amortization | 78,593 | 75,899 |
| Deferred income tax expense | 18,235 | 10,464 |
| Allowance for equity funds used during construction and other, net | (5,561) | (2,319) |
| Changes in certain assets and liabilities: | | |
| Accounts receivable and unbilled revenues | (11,992) | (9,880) |
| Materials and supplies | (13,685) | (3,938) |
| Other current assets | (51,467) | (11,469) |
| Other assets | (11,604) | (4,716) |
| Accounts payable | 20 | 8,036 |
| Accrued interest and taxes | (14,161) | (23,947) |
| Other current liabilities | 4,072 | 13,888 |
| Other liabilities | 15,458 | 6,994 |
| Net cash flows from operating activities | 78,532 | 102,263 |
| **Cash Flows From Investing Activities:** | | |
| Utility plant additions | (216,504) | (317,739) |
| Net cash flows used in investing activities | (216,504) | (317,739) |
| **Cash Flows From Financing Activities:** | | |
| Short-term borrowings | 524,300 | 264,600 |
| Repayments of short-term borrowings | (415,800) | (416,200) |
| Long-term borrowings | — | 1,224,300 |
| Repayment of long-term debt | — | (1,084,300) |
| Equity contribution from parent | — | 250,000 |
| Transmission interconnection and security deposit arrangements | 19,100 | 18,800 |
| Refunds paid under transmission interconnection and security deposit arrangements | (3,760) | (20,750) |
| Debt issuance costs and other, net | (1,071) | (5,207) |
| Net cash flows from financing activities | 122,769 | 231,243 |
| | | |
| **Change in Cash and Cash Equivalents** | (15,203) | 15,767 |
| **Cash and Cash Equivalents at Beginning of Period** | 15,251 | 233 |
| **Cash and Cash Equivalents at End of Period** | $ 48 | $ 16,000 |
| | | |
| **Supplemental Cash Flow Disclosures:** | | |
| Interest paid, net of amounts capitalized | $ 41,193 | $ 46,365 |
| Income taxes paid, net | $ 2,048 | $ 2,350 |
| | | |
| **Supplemental schedule of noncash investing activities:** | | |
| Decrease in accrued plant additions | $ 24,016 | $ 44,636 |

The accompanying notes, as they relate to TNMP, are an integral part of these condensed consolidated financial statements.

Table of Contents

**TEXAS-NEW MEXICO POWER COMPANY AND SUBSIDIARIES**
**A WHOLLY-OWNED SUBSIDIARY OF TXNM ENERGY, INC.**
**CONDENSED CONSOLIDATED BALANCE SHEETS**
(Unaudited)

| | June 30, 2026 | December 31, 2025 |
|---|---|---|
| | (In thousands) | |
| **ASSETS** | | |
| **Current Assets:** | | |
| Cash and cash equivalents | $ 48 | $ 15,251 |
| Accounts receivable | 42,159 | 35,894 |
| Unbilled revenues | 25,417 | 19,690 |
| Other receivables | 46,476 | 22,633 |
| Affiliate receivables | — | 565 |
| Materials and supplies | 49,338 | 35,653 |
| Regulatory assets | 72,014 | 33,286 |
| Prepaid and other current assets | 6,242 | 5,603 |
| Total current assets | 241,694 | 168,575 |
| **Other Property and Investments:** | | |
| Non-utility property, net | 26,006 | 21,153 |
| Total other property and investments | 26,006 | 21,153 |
| **Utility Plant:** | | |
| Plant in service and plant held for future use | 4,154,633 | 4,065,890 |
| Less accumulated depreciation and amortization | 719,274 | 679,035 |
| | 3,435,359 | 3,386,855 |
| Construction work in progress | 347,423 | 254,810 |
| Net utility plant | 3,782,782 | 3,641,665 |
| **Deferred Charges and Other Assets:** | | |
| Regulatory assets | 112,791 | 106,458 |
| Goodwill | 226,665 | 226,665 |
| Operating lease right-of-use assets, net of accumulated amortization | 331 | 39 |
| Other deferred charges | 33,415 | 23,163 |
| Total deferred charges and other assets | 373,202 | 356,325 |
| | $ 4,423,684 | $ 4,187,718 |

The accompanying notes, as they relate to TNMP, are an integral part of these condensed consolidated financial statements.

Table of Contents

**TEXAS-NEW MEXICO POWER COMPANY AND SUBSIDIARIES**
**A WHOLLY-OWNED SUBSIDIARY OF TXNM ENERGY, INC.**
**CONDENSED CONSOLIDATED BALANCE SHEETS**
(Unaudited)

| | June 30, 2026 | December 31, 2025 |
|---|---|---|
| | (In thousands, except share information) | |
| **LIABILITIES AND STOCKHOLDER'S EQUITY** | | |
| **Current Liabilities:** | | |
| Short-term debt | $ 108,500 | $ — |
| Accounts payable | 33,448 | 57,444 |
| Affiliate payables | 12,255 | 8,100 |
| Accrued interest and taxes | 57,969 | 72,129 |
| Regulatory liabilities | — | 2,592 |
| Operating lease liabilities | 76 | 15 |
| Other current liabilities | 14,526 | 14,618 |
| Total current liabilities | 226,774 | 154,898 |
| **Long-term Debt, net of Unamortized Premiums, Discounts, and Debt Issuance Costs** | 1,672,334 | 1,672,267 |
| **Deferred Credits and Other Liabilities:** | | |
| Accumulated deferred income taxes | 248,998 | 229,375 |
| Regulatory liabilities | 292,880 | 268,913 |
| Asset retirement obligations | 775 | 744 |
| Operating lease liabilities | 257 | 24 |
| Other deferred credits | 171,563 | 122,018 |
| Total deferred credits and other liabilities | 714,473 | 621,074 |
| Total liabilities | 2,613,581 | 2,448,239 |
| **Commitments and Contingencies (Note 11)** | | |
| **Common Stockholder's Equity:** | | |
| Common stock ($10 par value; 12,000,000 shares authorized; issued and outstanding 6,358 shares) | 64 | 64 |
| Paid-in-capital | 1,120,066 | 1,120,066 |
| Retained earnings | 689,973 | 619,349 |
| Total common stockholder's equity | 1,810,103 | 1,739,479 |
| | $ 4,423,684 | $ 4,187,718 |

The accompanying notes, as they relate to TNMP, are an integral part of these condensed consolidated financial statements.

Table of Contents

**TEXAS-NEW MEXICO POWER COMPANY AND SUBSIDIARIES**
**A WHOLLY-OWNED SUBSIDIARY OF TXNM ENERGY, INC.**
**CONDENSED CONSOLIDATED STATEMENTS OF CHANGES IN COMMON STOCKHOLDER'S EQUITY**
(Unaudited)

| | Common Stock | Paid-in Capital | Retained Earnings | Total Common Stockholder's Equity |
|---|---|---|---|---|
| | | (In thousands) | | |
| **Balance at March 31, 2026** | $ 64 | $ 1,120,066 | $ 650,039 | $ 1,770,169 |
| Net earnings | — | — | 39,934 | 39,934 |
| **Balance at June 30, 2026** | $ 64 | $ 1,120,066 | $ 689,973 | $ 1,810,103 |
| | | | | |
| **Balance at December 31, 2025** | $ 64 | $ 1,120,066 | $ 619,349 | $ 1,739,479 |
| Net earnings | — | — | 70,624 | 70,624 |
| **Balance at June 30, 2026** | $ 64 | $ 1,120,066 | $ 689,973 | $ 1,810,103 |
| | | | | |
| **Balance at March 31, 2025** | $ 64 | $ 870,066 | $ 517,342 | $ 1,387,472 |
| Net earnings | — | — | 20,968 | 20,968 |
| Equity contribution from parent | — | 250,000 | — | 250,000 |
| **Balance at June 30, 2025** | $ 64 | $ 1,120,066 | $ 538,310 | $ 1,658,440 |
| | | | | |
| **Balance at December 31, 2024** | $ 64 | $ 870,066 | $ 495,059 | $ 1,365,189 |
| Net earnings | — | — | 43,251 | 43,251 |
| Equity contribution from parent | — | 250,000 | — | 250,000 |
| **Balance at June 30, 2025** | $ 64 | $ 1,120,066 | $ 538,310 | $ 1,658,440 |

The accompanying notes, as they relate to TNMP, are an integral part of these condensed consolidated financial statements.

Table of Contents

**TXNM ENERGY, INC. AND SUBSIDIARIES**
**PUBLIC SERVICE COMPANY OF NEW MEXICO AND SUBSIDIARIES**
**TEXAS-NEW MEXICO POWER COMPANY AND SUBSIDIARIES**

**NOTES TO CONDENSED CONSOLIDATED FINANCIAL STATEMENTS**
(Unaudited)

## (1) Significant Accounting Policies and Responsibility for Financial Statements

### Financial Statement Preparation

In the opinion of management, the accompanying unaudited interim Condensed Consolidated Financial Statements reflect all normal and recurring accruals and adjustments that are necessary to present fairly the consolidated financial position at June 30, 2026, and December 31, 2025, and the consolidated results of operations, comprehensive income, and cash flows for the six months ended June 30, 2026 and 2025. The preparation of financial statements in conformity with GAAP requires management to make estimates and assumptions that affect the reported amounts of assets and liabilities, disclosure of contingent assets and liabilities at the date of the financial statements, and the reported amounts of revenues and expenses during the reporting period. Actual results could ultimately differ from those estimated. Weather causes the Company's results of operations to be seasonal in nature and the results of operations presented in the accompanying Condensed Consolidated Financial Statements are not necessarily representative of operations for an entire year.

The Notes to Condensed Consolidated Financial Statements include disclosures for TXNM, PNM, and TNMP. This report uses the term "Company" when discussing matters of common applicability to TXNM, PNM, and TNMP. Discussions regarding only TXNM, PNM, or TNMP are so indicated.

On May 18, 2025, TXNM, Parent, and Merger Sub, entered into the Merger Agreement, pursuant to which Merger Sub will merge with and into TXNM, with TXNM surviving the Merger as a direct, wholly-owned subsidiary of Parent. Parent and Merger Sub are affiliates of Blackstone Infrastructure. See Note 17.

These Condensed Consolidated Financial Statements are unaudited. Certain information and note disclosures normally included in the annual audited Consolidated Financial Statements have been condensed or omitted, as permitted under the applicable rules and regulations. Readers of these financial statements should refer to TXNM's, PNM's, and TNMP's audited Consolidated Financial Statements and Notes thereto that are included in their respective 2025 Annual Reports on Form 10-K.

GAAP defines subsequent events as events or transactions that occur after the balance sheet date but before financial statements are issued or are available to be issued. Based on their nature, magnitude, and timing, certain subsequent events may be required to be reflected at the balance sheet date and/or required to be disclosed in the financial statements. The Company has evaluated subsequent events accordingly.

### Principles of Consolidation

The Condensed Consolidated Financial Statements of each of TXNM, PNM, and TNMP include their accounts and those of subsidiaries in which that entity owns a majority voting interest. PNM also consolidates Valencia and ETBC I. See Note 6. PNM owns undivided interests in several jointly-owned power plants and records its pro-rata share of the assets, liabilities, and expenses for those plants. The agreements for the jointly-owned plants provide that if an owner were to default on its payment obligations, the non-defaulting owners would be responsible for their proportionate share of the obligations of the defaulting owner. In exchange, the non-defaulting owners would be entitled to their proportionate share of the generating capacity of the defaulting owner. There have been no such payment defaults under any of the agreements for the jointly-owned plants.

PNMR Services Company expenses, which represent costs that are primarily driven by corporate level activities, are charged to the business segments. These services are billed at cost and are reflected as general and administrative expenses in the business segments. Other significant intercompany transactions between TXNM, PNM, and TNMP include interest and income tax sharing payments, as well as equity transactions. See Note 15. All intercompany transactions and balances have been eliminated.

### Dividends on Common Stock

Dividends on TXNM's common stock are declared by the Board. The timing of the declaration of dividends is dependent on the timing of meetings and other actions of the Board. The Board declared dividends on common stock attributable to the second quarter of 2026 of $0.4225 per share in July 2026 and declared dividends on common stock attributable to the second quarter of 2025 of $0.4075 per share in July 2025, which are reflected as Dividends Declared per Common Share on the TXNM Condensed Consolidated Statement of Earnings.

TXNM did not make any cash equity contributions to TNMP in the three and six months ended June 30, 2026. TXNM made $250.0 million in cash equity contributions to TNMP in the three and six months ended June 30, 2025. TXNM made $0

Table of Contents

**TXNM ENERGY, INC. AND SUBSIDIARIES**
**PUBLIC SERVICE COMPANY OF NEW MEXICO AND SUBSIDIARIES**
**TEXAS-NEW MEXICO POWER COMPANY AND SUBSIDIARIES**

**NOTES TO CONDENSED CONSOLIDATED FINANCIAL STATEMENTS**
(Unaudited)

and $105.0 million in cash equity contributions to PNM in the three and six months ended June 30, 2026. TXNM did not make any cash equity contributions to PNM in the three and six months ended June 30, 2025. Neither PNM nor TNMP declared or paid any cash dividends on their common stock to TXNM in the three and six months ended June 30, 2026, and 2025.

**New Accounting Pronouncements**

Information concerning recently issued accounting pronouncements that have not yet been adopted by the Company is presented below. The Company does not expect difficulty in adopting these standards by their required effective dates.

*Accounting Standards Update 2024-03 - Income Statement (Subtopic 220-40): Reporting Comprehensive Income - Expense Disaggregation Disclosures*

In November 2024, the FASB issued ASU 2024-03 that will require disclosure, in the notes to the financial statements, of specified information about certain costs and expenses at each interim and annual period. Disclosures should include amounts for purchases of inventory, employee compensation, depreciation, and intangible asset amortization; certain amounts that are already required to be disclosed under GAAP in the same disclosure as other disaggregation requirements; qualitative descriptions of the amounts remaining in relevant expense categories that are not disaggregated; and the total amount of selling expenses including the entity's definition of selling expenses. In January 2025, ASU 2025-01 was issued to clarify that the amendments of ASU 2024-03 are effective for public business entities for annual reporting periods beginning after December 15, 2026, and interim reporting periods beginning after December 15, 2027. The Company expects to adopt the disclosure requirements of ASU 2024-03 with its Annual Report on Form 10-K for the year ended December 31, 2027.

*Accounting Standards Update 2025-06 – Intangibles – Goodwill and Other – Internal-Use Software (Subtopic 350-40): Targeted Improvements to the Accounting for Internal-Use Software*

In September 2025, the FASB issued ASU 2025-06 that updates the internal-use software guidance in subtopic 350-40 including the removal of all references to prescriptive and sequential developmental stages referred to as "project stages" throughout the subtopic. The new guidance requires an entity to start capitalizing software costs when management has authorized and committed to funding the project and it is probable that the project will be completed and used to perform the function it was intended for (referred to as the "probable-to-complete recognition threshold"). During the evaluation of the probable-to-complete recognition threshold, the entity is required to consider whether there is significant uncertainty associated with the development activities of the software. The amendments in this update are effective for all entities for annual reporting periods beginning after December 15, 2027, and interim reporting periods within those annual reporting periods. Early adoption is permitted as of the beginning of an annual reporting period. The amendments in this update permit an entity to apply the new guidance using a prospective transition approach, a modified transition approach (based on the status of a project and whether software costs were capitalized before the date of adoption), or a full retrospective transition approach. The Company has not yet determined which approach to adopt nor the impact that the new guidance will have on the accounting for its internal-use software projects.

*Accounting Standards Update 2025-11 – Interim reporting (Subtopic 270): Narrow-Scope Improvements*

In December 2025, the FASB issued ASU 2025-11 which clarifies and consolidates interim disclosure requirements. The ASU requires disclosure of material events occurring after the end of the last annual period and provides a comprehensive list of interim disclosures across multiple ASC Topics. The amendment is principle based and is modeled after previous SEC disclosure requirements, which is intended to help entities determine whether disclosures, not specified in Topic 270, should be provided in interim reporting periods. The amendment is effective for public business entities for interim reporting periods beginning after December 15, 2027. Early adoption is permitted. The Company is still evaluating the new standard.

*Accounting Standards Update 2026-02 - Environmental Credits and Environmental Credit Obligations (Topic 818)*

In May 2026, the FASB issued ASU 2026-02 which improves the financial accounting for and disclosure of environmental credits and environmental credit obligations. The ASU provides recognition, measurement, presentation, and disclosure requirements for all entities that generate, purchase, or receive environmental credits or have a regulatory compliance obligation that may be settled with environmental credits. The amendments in this update are effective for public business entities for annual reporting periods beginning after December 15, 2027, and interim reporting periods within those annual reporting periods. Early adoption is permitted as of the beginning of an annual reporting period. The Company is still evaluating the new standard.

Table of Contents

**TXNM ENERGY, INC. AND SUBSIDIARIES**
**PUBLIC SERVICE COMPANY OF NEW MEXICO AND SUBSIDIARIES**
**TEXAS-NEW MEXICO POWER COMPANY AND SUBSIDIARIES**

**NOTES TO CONDENSED CONSOLIDATED FINANCIAL STATEMENTS**
(Unaudited)

## (2) Segment Information

TXNM has three reportable segments, namely PNM, TNMP, and Corporate and Other. The accounting policies of the segments are the same as those described in the summary of significant accounting policies. The measure of profitability used by the CODM is Segment earnings (loss) attributable to TXNM, as presented below. The CODM uses this measure of profitability to allocate resources for each segment predominantly in the annual budget and forecasting process. The CODM considers budget to actual variances on a regular basis when making decisions about allocating capital and operational expense funding to the segments. TXNM's CODM is its current President and Chief Executive Officer ("CEO") who is also the CEO of the PNM and TNMP segments.

**PNM**

PNM's electric utility operations are subject to traditional rate regulation by the NMPRC. PNM provides integrated electricity services that include the generation, transmission, and distribution of electricity for retail electric customers in New Mexico; the generation and sale of electricity into the wholesale market, which includes the asset optimization of PNM's jurisdictional capacity, as well as providing transmission services to third parties. FERC has jurisdiction over wholesale power and transmission rates. PNM's operations also include the results of ETBC I since its formation in 2023.

**TNMP**

TNMP is an electric utility providing services in Texas under the TECA. TNMP's operations are subject to traditional rate regulation by the PUCT. TNMP provides transmission and distribution services at regulated rates to various REPs that, in turn, provide retail electric service to consumers within TNMP's service area. TNMP also provides transmission services at regulated rates to other utilities that interconnect with TNMP's facilities.

**Corporate and Other**

The Corporate and Other segment includes TXNM holding company activities, primarily related to corporate level debt and PNMR Services Company. Eliminations of intercompany transactions are reflected in the Corporate and Other segment. The following tables present summarized financial information for TXNM by segment. PNM and TNMP each operate in only one segment. Therefore, tabular segment information is not presented for PNM and TNMP.

**TXNM SEGMENT INFORMATION**

| | PNM | TNMP | Corporate and Other | TXNM |
|---|---|---|---|---|
| | | (In thousands) | | |
| **Three Months Ended June 30, 2026** | | | | |
| **Electric operating revenues** | $ 361,116 | $ 187,438 | $ — | $ 548,554 |
| **Cost of energy** | | | | |
| Fuel burn | 18,682 | — | — | 18,682 |
| Purchases for resale | 94,225 | — | — | 94,225 |
| Transmission by others | 7,274 | 43,958 | — | 51,232 |
| **Significant segment expenses** | | | | |
| Administrative and general - direct | 19,202 | (1,034) | 37,426 | 55,594 |
| Administrative and general - corporate allocation | 32,050 | 13,712 | (45,762) | — |
| Customer related expenses | 8,382 | 892 | — | 9,274 |
| Energy production costs | 25,340 | — | — | 25,340 |
| Depreciation and amortization | 65,310 | 39,572 | 9,749 | 114,631 |
| Transmission and distribution costs | 15,374 | 10,003 | — | 25,377 |
| Taxes other than income taxes | 16,294 | 12,751 | 1,852 | 30,897 |
| **Total operating expenses** | 302,133 | 119,854 | 3,265 | 425,252 |
| Net other income and (deductions) | 29,477 | 4,421 | (191) | 33,707 |
| Interest charges | (32,335) | (22,030) | (14,978) | (69,343) |
| Income taxes (benefit) | 6,233 | 10,041 | (3,998) | 12,276 |
| Valencia non-controlling interest | (3,994) | — | — | (3,994) |
| Subsidiary preferred stock dividends | (132) | — | — | (132) |
| **Segment earnings (loss) attributable to TXNM** | $ 45,766 | $ 39,934 | $ (14,436) | $ 71,264 |

Table of Contents

**TXNM ENERGY, INC. AND SUBSIDIARIES**
**PUBLIC SERVICE COMPANY OF NEW MEXICO AND SUBSIDIARIES**
**TEXAS-NEW MEXICO POWER COMPANY AND SUBSIDIARIES**

**NOTES TO CONDENSED CONSOLIDATED FINANCIAL STATEMENTS**
(Unaudited)

| | PNM | TNMP | Corporate and Other | TXNM |
|---|---|---|---|---|
| | | (In thousands) | | |
| **Six Months Ended June 30, 2026** | | | | |
| **Electric operating revenues** | $ 691,127 | $ 362,409 | $ — | $ 1,053,536 |
| **Cost of energy** | | | | |
| Fuel burn | 60,304 | — | — | 60,304 |
| Purchases for resale | 168,042 | — | — | 168,042 |
| Transmission by others | 14,900 | 87,385 | — | 102,285 |
| **Significant segment expenses** | | | | |
| Administrative and general - direct | 38,973 | (1,029) | 75,818 | 113,762 |
| Administrative and general - corporate allocation | 65,728 | 28,236 | (93,964) | — |
| Customer related expenses | 16,358 | 1,661 | — | 18,019 |
| Energy production costs | 49,743 | — | — | 49,743 |
| Depreciation and amortization | 129,420 | 78,136 | 19,398 | 226,954 |
| Transmission and distribution costs | 33,316 | 17,948 | — | 51,264 |
| Taxes other than income taxes | 33,219 | 25,850 | 3,781 | 62,850 |
| **Total operating expenses** | 610,003 | 238,187 | 5,033 | 853,223 |
| Net other income and (deductions) | 26,177 | 7,588 | (478) | 33,287 |
| Interest charges | (65,364) | (43,431) | (29,143) | (137,938) |
| Income taxes (benefit) | 3,659 | 17,755 | (9,147) | 12,267 |
| Valencia non-controlling interest | (8,130) | — | — | (8,130) |
| Subsidiary preferred stock dividends | (264) | — | — | (264) |
| **Segment earnings (loss) attributable to TXNM** | $ 29,884 | $ 70,624 | $ (25,507) | $ 75,001 |
| **At June 30, 2026:** | | | | |
| **Total Assets** | $ 7,877,922 | $ 4,423,684 | $ 206,316 | $ 12,507,922 |
| **Goodwill** | $ 51,632 | $ 226,665 | $ — | $ 278,297 |

| | PNM | TNMP | Corporate and Other | TXNM |
|---|---|---|---|---|
| | | (In thousands) | | |
| **Three Months Ended June 30, 2025** | | | | |
| **Electric operating revenues** | $ 338,372 | $ 164,048 | $ — | $ 502,420 |
| **Cost of energy** | | | | |
| Fuel burn | 29,927 | — | — | 29,927 |
| Purchases for resale | 88,870 | — | — | 88,870 |
| Transmission by others | 5,539 | 43,286 | — | 48,825 |
| **Significant segment expenses** | | | | |
| Administrative and general - direct | 16,603 | 134 | 50,910 | 67,647 |
| Administrative and general - corporate allocation | 35,317 | 14,110 | (49,427) | — |
| Customer related expenses | 7,606 | 750 | (12) | 8,344 |
| Energy production costs | 26,081 | — | — | 26,081 |
| Depreciation and amortization | 60,778 | 34,926 | 9,531 | 105,235 |
| Transmission and distribution costs | 15,750 | 10,711 | — | 26,461 |
| Taxes other than income taxes | 15,262 | 11,444 | 1,623 | 28,329 |
| **Total operating expenses** | 301,733 | 115,361 | 12,625 | 429,719 |
| Net other income and (deductions) | 26,545 | 1,694 | (1,588) | 26,651 |
| Interest charges | (31,975) | (23,942) | (16,096) | (72,013) |
| Income taxes (benefit) | 2,410 | 5,471 | (6,555) | 1,326 |
| Valencia non-controlling interest | (4,305) | — | — | (4,305) |
| Subsidiary preferred stock dividends | (132) | — | — | (132) |
| **Segment earnings (loss) attributable to TXNM** | $ 24,362 | $ 20,968 | $ (23,754) | $ 21,576 |

Table of Contents

**TXNM ENERGY, INC. AND SUBSIDIARIES**
**PUBLIC SERVICE COMPANY OF NEW MEXICO AND SUBSIDIARIES**
**TEXAS-NEW MEXICO POWER COMPANY AND SUBSIDIARIES**

**NOTES TO CONDENSED CONSOLIDATED FINANCIAL STATEMENTS**
(Unaudited)

| | PNM | TNMP | Corporate and Other | TXNM |
|---|---|---|---|---|
| | | | (In thousands) | |
| **Six Months Ended June 30, 2025** | | | | |
| **Electric operating revenues** | $ 671,752 | $ 313,460 | $ — | $ 985,212 |
| **Cost of energy** | | | | |
| Fuel burn | 56,468 | — | — | 56,468 |
| Purchases for resale | 186,105 | — | — | 186,105 |
| Transmission by others | 12,717 | 81,514 | — | 94,231 |
| **Significant segment expenses** | | | | |
| Administrative and general - direct | 34,469 | (1,918) | 87,480 | 120,031 |
| Administrative and general - corporate allocation | 67,405 | 27,486 | (94,891) | — |
| Customer related expenses | 15,262 | 1,467 | — | 16,729 |
| Energy production costs | 50,627 | — | — | 50,627 |
| Depreciation and amortization | 120,581 | 70,139 | 19,066 | 209,786 |
| Transmission and distribution costs | 31,576 | 20,390 | — | 51,966 |
| Taxes other than income taxes | 28,565 | 22,948 | 3,166 | 54,679 |
| **Total operating expenses** | 603,775 | 222,026 | 14,821 | 840,622 |
| | | | | |
| Net other income and (deductions) | 29,805 | 4,100 | (1,777) | 32,128 |
| Interest charges | (61,791) | (41,264) | (32,509) | (135,564) |
| Income taxes (benefit) | 2,373 | 11,019 | (11,048) | 2,344 |
| Valencia non-controlling interest | (8,047) | — | — | (8,047) |
| Subsidiary preferred stock dividends | (264) | — | — | (264) |
| **Segment earnings (loss) attributable to TXNM** | $ 25,307 | $ 43,251 | $ (38,059) | $ 30,499 |
| | | | | |
| **At June 30, 2025:** | | | | |
| **Total Assets** | $ 7,593,440 | $ 3,923,342 | $ 158,482 | $ 11,675,264 |
| **Goodwill** | $ 51,632 | $ 226,665 | $ — | $ 278,297 |

*Significant Segment Expenses*

Reflected above are certain additional categories of operating expenses that are regularly provided to the CODM. Cost of energy consists primarily of fuel and purchase power costs for PNM and costs charged by third-party transmission providers for TNMP. Administrative and general - direct expenses are those that are incurred directly by the segment while Administrative and general - corporate allocation are those costs that are incurred by the Corporate and Other segment and allocated to the utilities based on the nature of the cost incurred. Administrative and general - corporate allocation is eliminated in the Corporate and Other segment. Customer related expenses include meter reading, customer service, and bad debt expenses.

Table of Contents

**TXNM ENERGY, INC. AND SUBSIDIARIES**
**PUBLIC SERVICE COMPANY OF NEW MEXICO AND SUBSIDIARIES**
**TEXAS-NEW MEXICO POWER COMPANY AND SUBSIDIARIES**

**NOTES TO CONDENSED CONSOLIDATED FINANCIAL STATEMENTS**
(Unaudited)

**(3) Accumulated Other Comprehensive Income (Loss)**

Information regarding accumulated other comprehensive income (loss) for the six months ended June 30, 2026, and 2025 is as follows:

| | Accumulated Other Comprehensive Income (Loss) | | | | |
|---|---|---|---|---|---|
| | PNM | | | Corporate and Other | TXNM |
| | Unrealized Gains on Available-for-Sale Debt Securities | Pension Liability Adjustment | Total | Fair Value Adjustment for Cash Flow Hedges | Total |
| | | | (In thousands) | | |
| **Balance at December 31, 2025** | $ 218 | $ (25,921) | $ (25,703) | $ (1,113) | $ (26,816) |
| Amounts reclassified from AOCI (pre-tax) | (256) | 1,445 | 1,189 | 94 | 1,283 |
| Income tax impact of amounts reclassified | 65 | (367) | (302) | (24) | (326) |
| Other OCI changes (pre-tax) | 67 | — | 67 | — | 67 |
| Income tax impact of other OCI changes | (17) | — | (17) | — | (17) |
| Net after-tax change | (141) | 1,078 | 937 | 70 | 1,007 |
| **Balance at June 30, 2026** | $ 77 | $ (24,843) | $ (24,766) | $ (1,043) | $ (25,809) |

| | | | | | |
|---|---|---|---|---|---|
| **Balance at December 31, 2024** | $ 214 | $ (75,922) | $ (75,708) | $ — | $ (75,708) |
| Amounts reclassified from AOCI (pre-tax) | (338) | 2,749 | 2,411 | — | 2,411 |
| Income tax impact of amounts reclassified | 86 | (698) | (612) | — | (612) |
| Other OCI changes (pre-tax) | 504 | — | 504 | (2,493) | (1,989) |
| Income tax impact of other OCI changes | (128) | — | (128) | 633 | 505 |
| Net after-tax change | 124 | 2,051 | 2,175 | (1,860) | 315 |
| **Balance at June 30, 2025** | $ 338 | $ (73,871) | $ (73,533) | $ (1,860) | $ (75,393) |

The Condensed Consolidated Statements of Earnings include pre-tax amounts reclassified from AOCI related to Unrealized Gains on Available-for-Sale Debt Securities in (losses) on investment securities and Fair Value Adjustment for Cash Flow Hedges in interest charges. The income tax impacts of all amounts reclassified from AOCI are included in income taxes in the Condensed Consolidated Statements of Earnings.

**(4) Earnings Per Share**

Basic earnings per share is computed by dividing net earnings attributable to TXNM by the weighted average number of common shares outstanding during the period. Diluted earnings per share was computed by dividing net earnings attributable to TXNM by the diluted weighted average number of common shares outstanding during the period. Diluted earnings per share reflect the potential dilution that could occur if securities or other agreements to issue common stock were settled. TXNM applies the treasury stock method for restricted stock and the if-converted method is applied in determining the dilutive effect of the potential conversion of eligible Convertible Notes.

Table of Contents

**TXNM ENERGY, INC. AND SUBSIDIARIES**
**PUBLIC SERVICE COMPANY OF NEW MEXICO AND SUBSIDIARIES**
**TEXAS-NEW MEXICO POWER COMPANY AND SUBSIDIARIES**

**NOTES TO CONDENSED CONSOLIDATED FINANCIAL STATEMENTS**
(Unaudited)

Information regarding the computation of earnings per share is as follows:

| | Three Months Ended June 30, | | Six Months Ended June 30, | |
|---|---|---|---|---|
| | 2026 | 2025 | 2026 | 2025 |
| | (In thousands, except per share amounts) | | | |
| **Net Earnings Attributable to TXNM** | $ 71,264 | $ 21,576 | $ 75,001 | $ 30,499 |
| **Average Number of Common Shares:** | | | | |
| Outstanding during period | 110,925 | 95,793 | 110,235 | 94,235 |
| Vested awards of restricted stock | 257 | 339 | 286 | 348 |
| **Average Shares – Basic** | 111,182 | 96,132 | 110,521 | 94,583 |
| **Dilutive Effect of Common Stock Equivalents:** | | | | |
| Restricted stock | 50 | 65 | 37 | 54 |
| Convertible Notes | — | — | 1,494 | — |
| **Average Shares – Diluted** | 111,232 | 96,197 | 112,052 | 94,637 |
| **Net Earnings Per Share of Common Stock:** | | | | |
| Basic | $ 0.64 | $ 0.22 | $ 0.68 | $ 0.32 |
| Diluted | $ 0.64 | $ 0.22 | $ 0.67 | $ 0.32 |

**(5) Electric Operating Revenues**

TXNM is an investor-owned holding company with two regulated utilities providing electricity and electric services in New Mexico and Texas. TXNM's electric utilities are PNM and TNMP. Additional information concerning electric operating revenue is contained in Note 4 of the Notes to Consolidated Financial Statements in the 2025 Annual Reports on Form 10-K.

**Accounts Receivable and Allowance for Credit Losses**

Accounts receivable consists primarily of trade receivables from customers. In the normal course of business, credit is extended to customers on a short-term basis. The Company estimates the allowance for credit losses on trade receivables based on historical experience and estimated default rates. Accounts receivable balances are reviewed monthly, adjustments to the allowance for credit losses are made as necessary and amounts that are deemed uncollectible are written off. In addition to the allowance for credit losses on trade receivables, the Company has evaluated other receivables for potential credit related losses. These balances include potential exposures for other non-retail utility services. In both the three and six months ended June 30, 2026 and 2025, there were no estimated credit losses related to these transactions.

**Contract Balances**

Performance obligations related to contracts with customers are typically satisfied when the energy is delivered, and the customer or end-user utilizes the energy. Accounts receivable from customers represents amounts billed, including amounts under Alternative Revenue Programs ("ARP"). For PNM, accounts receivable reflected on the Condensed Consolidated Balance Sheets, net of allowance for credit losses, includes $103.0 million at June 30, 2026, and $115.9 million at December 31, 2025, resulting from contracts with customers. All of TNMP's accounts receivable result from contracts with customers.

Contract assets are an entity's right to consideration in exchange for goods or services that the entity has transferred to a customer when that right is conditioned on something other than the passage of time (for example, the entity's future performance). Upon the completion of the Western Spirit Line, PNM entered into a TSA with Pattern Wind under an incremental tariff rate approved by FERC. The terms of the agreement provide for a financing component that benefits the customer. As such, the revenue that PNM recognizes will be in excess of the consideration received at the beginning of the service term resulting in a contract asset. The balance of the contract asset is $46.0 million at June 30, 2026, and $41.3 million at December 31, 2025. This contract asset is presented in Other deferred charges on the Condensed Consolidated Balance Sheets.

Table of Contents

**TXNM ENERGY, INC. AND SUBSIDIARIES**
**PUBLIC SERVICE COMPANY OF NEW MEXICO AND SUBSIDIARIES**
**TEXAS-NEW MEXICO POWER COMPANY AND SUBSIDIARIES**

**NOTES TO CONDENSED CONSOLIDATED FINANCIAL STATEMENTS**
(Unaudited)

**Disaggregation of Revenues**

A disaggregation of revenues from contracts with customers by the type of customer is presented in the table below.

| | PNM | TNMP | TXNM |
|---|---|---|---|
| **Three Months Ended June 30, 2026** | | (In thousands) | |
| **Electric Operating Revenues:** | | | |
| Contracts with customers: | | | |
| Retail electric revenue | | | |
| Residential | $ 130,305 | $ 62,908 | $ 193,213 |
| Commercial | 110,831 | 46,368 | 157,199 |
| Industrial | 43,201 | 14,834 | 58,035 |
| Public authority | 5,291 | 2,294 | 7,585 |
| Economy energy service | 3,279 | — | 3,279 |
| Transmission | 40,742 | 44,216 | 84,958 |
| Wholesale energy sales | 11,171 | — | 11,171 |
| Miscellaneous | 2,007 | 1,064 | 3,071 |
| Total revenues from contracts with customers | 346,827 | 171,684 | 518,511 |
| Alternative revenue programs | 8,063 | 15,754 | 23,817 |
| Other electric operating revenues | 6,226 | — | 6,226 |
| **Total Electric Operating Revenues** | $ 361,116 | $ 187,438 | $ 548,554 |
| **Six Months Ended June 30, 2026** | | | |
| **Electric Operating Revenues:** | | | |
| Contracts with customers: | | | |
| Retail electric revenue | | | |
| Residential | $ 250,457 | $ 115,995 | $ 366,452 |
| Commercial | 206,205 | 92,090 | 298,295 |
| Industrial | 82,071 | 31,136 | 113,207 |
| Public authority | 9,663 | 4,481 | 14,144 |
| Economy energy service | 6,521 | — | 6,521 |
| Transmission | 80,114 | 89,881 | 169,995 |
| Wholesale energy sales | 31,384 | — | 31,384 |
| Miscellaneous | 3,996 | 2,303 | 6,299 |
| Total revenues from contracts with customers | 670,411 | 335,886 | 1,006,297 |
| Alternative revenue programs | 12,183 | 26,523 | 38,706 |
| Other electric operating revenues | 8,533 | — | 8,533 |
| **Total Electric Operating Revenues** | $ 691,127 | $ 362,409 | $ 1,053,536 |

Table of Contents

**TXNM ENERGY, INC. AND SUBSIDIARIES**
**PUBLIC SERVICE COMPANY OF NEW MEXICO AND SUBSIDIARIES**
**TEXAS-NEW MEXICO POWER COMPANY AND SUBSIDIARIES**

**NOTES TO CONDENSED CONSOLIDATED FINANCIAL STATEMENTS**
(Unaudited)

| | PNM | TNMP | TXNM |
|---|---|---|---|
| **Three Months Ended June 30, 2025** | | | |
| **Electric Operating Revenues:** | | | |
| Contracts with customers: | | | |
| Retail electric revenue | | | |
| Residential | $ 120,009 | $ 54,176 | $ 174,185 |
| Commercial | 111,840 | 44,459 | 156,299 |
| Industrial | 34,659 | 14,305 | 48,964 |
| Public authority | 5,694 | 1,988 | 7,682 |
| Economy energy service | 6,762 | — | 6,762 |
| Transmission | 36,352 | 41,279 | 77,631 |
| Wholesale energy sales | 19,895 | — | 19,895 |
| Miscellaneous | 1,448 | 952 | 2,400 |
| Total revenues from contracts with customers | 336,659 | 157,159 | 493,818 |
| Alternative revenue programs | 245 | 6,889 | 7,134 |
| Other electric operating revenues | 1,468 | — | 1,468 |
| **Total Electric Operating Revenues** | $ 338,372 | $ 164,048 | $ 502,420 |
| **Six Months Ended June 30, 2025** | | | |
| **Electric Operating Revenues:** | | | |
| Contracts with customers: | | | |
| Retail electric revenue | | | |
| Residential | $ 244,563 | $ 102,957 | $ 347,520 |
| Commercial | 213,999 | 91,421 | 305,420 |
| Industrial | 68,291 | 25,851 | 94,142 |
| Public authority | 10,712 | 3,982 | 14,694 |
| Economy energy service | 17,998 | — | 17,998 |
| Transmission | 71,369 | 81,498 | 152,867 |
| Wholesale energy sales | 36,824 | — | 36,824 |
| Miscellaneous | 2,860 | 1,906 | 4,766 |
| Total revenues from contracts with customers | 666,616 | 307,615 | 974,231 |
| Alternative revenue programs | 2,391 | 5,845 | 8,236 |
| Other electric operating revenues | 2,745 | — | 2,745 |
| **Total Electric Operating Revenues** | $ 671,752 | $ 313,460 | $ 985,212 |

**(6) Variable Interest Entities**

How an enterprise evaluates and accounts for its involvement with variable interest entities focuses primarily on whether the enterprise has the power to direct the activities that most significantly impact the economic performance of a VIE. This evaluation requires continual reassessment of the primary beneficiary of a VIE. Additional information concerning PNM's VIEs is contained in Note 10 of the Notes to Consolidated Financial Statements in the 2025 Annual Reports on Form 10-K.

**Valencia**

PNM has a PPA to purchase all of the electric capacity and energy from Valencia, a 155 MW natural gas-fired power plant near Belen, New Mexico, through May 2028. In May 2025, the NMPRC approved a new PPA for 167 MW, through 2039, in connection with the 2028 Resource Application. A third party built, owns, and operates the facility while PNM is the sole purchaser of the electricity generated. PNM is obligated to pay fixed operation and maintenance and capacity charges in addition to variable operation and maintenance charges. For the three and six months ended June 30, 2026, PNM paid $5.2 million and $10.4 million for fixed charges and $0.4 million and $1.4 million for variable charges. For the three and six months ended June 30, 2025, PNM paid $5.0 million and $9.9 million for fixed charges and $0.9 million and $1.4 million for variable charges. PNM does not have any other financial obligations related to Valencia. The assets of Valencia can only be used to

Table of Contents

**TXNM ENERGY, INC. AND SUBSIDIARIES**
**PUBLIC SERVICE COMPANY OF NEW MEXICO AND SUBSIDIARIES**
**TEXAS-NEW MEXICO POWER COMPANY AND SUBSIDIARIES**

**NOTES TO CONDENSED CONSOLIDATED FINANCIAL STATEMENTS**
(Unaudited)

satisfy its obligations and creditors of Valencia do not have any recourse against PNM's assets. During the term of the original PPA, PNM has the option, under certain conditions, to purchase and own up to 50% of the plant or the VIE. The original PPA specifies that the purchase price would be the greater of 50% of book value reduced by related indebtedness or 50% of fair market value.

PNM sources fuel for the plant, controls when the facility operates through its dispatch, and receives the entire output of the plant, which factors directly and significantly impact the economic performance of Valencia. Therefore, PNM has concluded that the third-party entity that owns Valencia is a VIE and that PNM is the primary beneficiary of the entity since PNM has the power to direct the activities that most significantly impact the economic performance of Valencia and will absorb the majority of the variability in the cash flows of the plant. As the primary beneficiary, PNM consolidates Valencia in its financial statements. Accordingly, the assets, liabilities, operating expenses, and cash flows of Valencia are included in the Condensed Consolidated Financial Statements of PNM although PNM has no legal ownership interest or voting control of the VIE. The assets and liabilities of Valencia are set forth below and are not shown separately on the Condensed Consolidated Balance Sheets. The owner's equity and net income of Valencia are considered attributable to non-controlling interest.

Summarized financial information for Valencia is as follows:

**Results of Operations**

| | Three Months Ended June 30, | | Six Months Ended June 30, | |
|---|---|---|---|---|
| | 2026 | 2025 | 2026 | 2025 |
| | (In thousands) | | | |
| Operating revenues | $ 5,648 | $ 5,926 | $ 11,781 | $ 11,348 |
| Operating expenses | 1,654 | 1,621 | 3,651 | 3,301 |
| Earnings attributable to non-controlling interest | $ 3,994 | $ 4,305 | $ 8,130 | $ 8,047 |

**Financial Position**

| | June 30, 2026 | December 31, 2025 |
|---|---|---|
| | (In thousands) | |
| Current assets | $ 3,433 | $ 3,205 |
| Net property, plant, and equipment | 45,130 | 41,570 |
| Total assets | 48,563 | 44,775 |
| Current liabilities | 617 | 787 |
| Owners' Equity – Non-controlling Interest | $ 47,946 | $ 43,988 |

**Westmoreland San Juan Mining, LLC**

As discussed in the subheading Coal Supply in Note 11, PNM and Westmoreland San Juan Mining, LLC ("WSJ LLC"), a subsidiary of Westmoreland Mining Holdings, LLC have agreements under which mine reclamation services for SJGS will be provided.

TXNM has $19.3 million in letters of credit outstanding to facilitate the issuance of reclamation bonds. The letters of credit support results in TXNM having a variable interest in WSJ LLC since TXNM is subject to possible loss in the event performance by TXNM is required under the letters of credit support. TXNM considers the possibility of loss under the letters of credit support to be remote since the purpose of posting the bonds is to provide assurance that WSJ LLC performs the required reclamation of the mine site in accordance with applicable regulations and the reclamation services agreement provides WSJ LLC the ability to recover the cost of reclamation. As discussed in Note 11, each of the SJGS participants has established and actively fund trusts to meet future reclamation obligations.

WSJ LLC is considered a VIE. TXNM's analysis of its arrangements with WSJ LLC concluded that WSJ LLC has the ability to direct its reclamation services, which are the factors that most significantly impact the economic performance of WSJ LLC. Other than PNM being able to monitor the reclamation activities, the reclamation services were solely under the control of WSJ LLC, including developing reclamation plans, hiring personnel, and incurring operating and maintenance expenses. Neither TXNM nor PNM has any ability to direct or influence the reclamation activities. PNM's involvement through the

Table of Contents

**TXNM ENERGY, INC. AND SUBSIDIARIES**
**PUBLIC SERVICE COMPANY OF NEW MEXICO AND SUBSIDIARIES**
**TEXAS-NEW MEXICO POWER COMPANY AND SUBSIDIARIES**

**NOTES TO CONDENSED CONSOLIDATED FINANCIAL STATEMENTS**
(Unaudited)

reclamation services agreement is a protective right rather than a participating right, and WSJ LLC still has the power to direct the activities that most significantly impact the economic performance of WSJ LLC. If WSJ LLC performs reclamation services more efficiently than anticipated, its economic performance will improve. Conversely, if WSJ LLC does not perform reclamation services as efficiently as anticipated, its economic performance will be negatively impacted. Accordingly, TXNM believes WSJ LLC is the primary beneficiary and, therefore, WSJ LLC is not consolidated by either TXNM or PNM. The amounts outstanding under the letters of credit support continue to be TXNM's maximum exposure to loss from the VIE at June 30, 2026.

**ETBC I**

ETBC I is a wholly-owned, special purpose subsidiary of PNM that was formed in August 2023 for the limited purpose of purchasing, owning, and administering energy transition property, issuing securitized bonds, and performing related activities authorized by the NMPRC. On November 15, 2023, ETBC I issued the ETBC I Securitized Bonds and used the proceeds to purchase energy transition property from PNM. The energy transition property purchased includes the right to impose, bill, collect, and adjust a non-bypassable energy transition charge from all PNM retail customers until the ETBC I Securitized Bonds are paid in full and all allowed financing costs have been recovered. The ETBC I Securitized Bonds are secured by the energy transition property, and cash collections from the Energy Transition Charges are the sole source of funds to satisfy the debt obligation. The bondholders have no recourse to PNM.

PNM acts as the servicer of the energy transition property on behalf of ETBC I and is responsible for metering, calculating, billing, and collecting the Energy Transition Charges. On behalf of ETBC I, PNM is required to remit all collections of the Energy Transition Charges to the trustee for the ETBC I Securitized Bonds. PNM has the power to direct the activities that most significantly impact the economic performance of ETBC I and will absorb the majority of the variability in the cash flows of the entity. As the primary beneficiary, PNM consolidates ETBC I in its financial statements. Accordingly, the assets, liabilities, operating expenses, and cash flows of ETBC I are included in the Consolidated Financial Statements of PNM.

The following tables summarize the impact of ETBC I on PNM's Financial Statements:

**Results of Operations**

| | Three Months Ended June 30, | | Six Months Ended June 30, | |
|---|---|---|---|---|
| | 2026 | 2025 | 2026 | 2025 |
| | (In thousands) | | | |
| Electric Operating Revenues | $ 6,649 | $ 6,609 | $ 13,383 | $ 13,408 |
| Depreciation and amortization | 1,824 | 1,724 | 3,623 | 3,424 |
| Interest Charges | 4,847 | 4,947 | 9,719 | 9,918 |
| Other | (22) | (62) | 41 | 66 |
| Net Earnings | $ — | $ — | $ — | $ — |

**Financial Position**

| | June 30, 2026 | December 31, 2025 |
|---|---|---|
| | (In thousands) | |
| Restricted cash (included in Other current assets) | $ 10,655 | $ 11,954 |
| Restricted cash (included in Other deferred charges) | 1,740 | 1,743 |
| Securitized Cost (included in Regulatory assets - Deferred) | 325,511 | 329,134 |
| Current installments of long-term debt | 7,509 | 7,303 |
| Accrued interest and taxes | 7,230 | 7,306 |
| Regulatory liabilities - Current | 1,878 | 3,009 |
| Long-term Debt | 320,779 | 324,531 |

Table of Contents

**TXNM ENERGY, INC. AND SUBSIDIARIES**
**PUBLIC SERVICE COMPANY OF NEW MEXICO AND SUBSIDIARIES**
**TEXAS-NEW MEXICO POWER COMPANY AND SUBSIDIARIES**

**NOTES TO CONDENSED CONSOLIDATED FINANCIAL STATEMENTS**
(Unaudited)

## (7) Fair Value of Derivative and Other Financial Instruments

Additional information concerning energy related derivative contracts and other financial instruments is contained in Note 9 of the Notes to Consolidated Financial Statements in the 2025 Annual Reports on Form 10-K.

Fair value is defined as the price that would be received for an asset or paid to transfer a liability (an exit price) in the principal or most advantageous market for the asset or liability in an orderly transaction between market participants on the measurement date. Fair value is based on current market quotes as available and is supplemented by modeling techniques and assumptions made by the Company to the extent quoted market prices or volatilities are not available. External pricing input availability varies based on commodity location, market liquidity, and term of the agreement. Valuations of derivative assets and liabilities take into account nonperformance risk, including the effect of counterparties' and the Company's credit risk. The Company regularly assesses the validity and availability of pricing data for its derivative transactions. Although the Company uses its best judgment in estimating the fair value of these instruments, there are inherent limitations in any estimation technique.

### Energy Related Derivative Contracts

**Overview**

The primary objective for the use of commodity derivative instruments, including energy contracts, options, swaps, and futures, is to manage price risk associated with forecasted purchases of energy and fuel used to generate electricity, as well as managing anticipated generation capacity in excess of forecasted demand from existing customers. PNM's energy related derivative contracts manage commodity risk. TNMP does not enter into energy related derivative contracts.

PNM enters into agreements for the purchase and sale of power from third parties. As PNM is required to meet the demand and energy needs of its customers, PNM may be exposed to market risk for the needs of its customers not covered under the FPPAC.

PNM's operations are managed primarily through a net asset-backed strategy, whereby PNM's aggregate net open forward contract position is covered by its forecasted excess generation capabilities or market purchases. PNM could be exposed to market risk if its generation capabilities were to be disrupted or if its load requirements were to be greater than anticipated. If all or a portion of load requirements were required to be covered as a result of such unexpected situations, commitments would have to be met through market purchases.

**Commodity Risk**

Marketing and procurement of energy often involve market risks associated with managing energy commodities and establishing positions in the energy markets, primarily on a short-term basis. PNM routinely enters into various derivative instruments such as forward contracts, option agreements, and price basis swap agreements to economically hedge price and volume risk on power commitments and fuel requirements and to minimize the effect of market fluctuations. PNM monitors the market risk of its commodity contracts in accordance with approved risk and credit policies.

**Accounting for Derivatives**

Under derivative accounting and related rules for energy contracts, PNM accounts for its various instruments for the purchase and sale of energy, which meet the definition of a derivative, based on PNM's intent. During the six months ended June 30, 2026, and the year ended December 31, 2025, PNM was not hedging its exposure to the variability in future cash flows from commodity derivatives through designated cash flow hedges. The derivative contracts recorded at fair value that do not qualify or are not designated for cash flow hedge accounting are classified as economic hedges. Economic hedges are defined as derivative instruments, including long-term power agreements, used to economically hedge generation assets, purchased power and fuel costs, and customer load requirements. Changes in the fair value of economic hedges are reflected in Operating income on the Condensed Consolidated Statements of Earnings and are presented in Electric Operating Revenues and Cost of energy according to the intent of the hedge. PNM also uses such instruments under an NMPRC-approved hedging plan to manage fuel and purchased power costs related to customers covered by its FPPAC. Changes in the fair value of instruments covered by its FPPAC are recorded as Regulatory assets and Regulatory liabilities on the Condensed Consolidated Balance Sheets. The cash impacts of settled derivatives are recorded as operating activities or financing activities on the Condensed Consolidated Statement of Cash Flows consistent with the classification of the hedged transaction. PNM has no trading transactions.

Table of Contents

**TXNM ENERGY, INC. AND SUBSIDIARIES**
**PUBLIC SERVICE COMPANY OF NEW MEXICO AND SUBSIDIARIES**
**TEXAS-NEW MEXICO POWER COMPANY AND SUBSIDIARIES**

**NOTES TO CONDENSED CONSOLIDATED FINANCIAL STATEMENTS**
(Unaudited)

**Commodity Derivatives**

During 2025, PNM had three agreements to purchase a total of 250 MW for the period of July 1, 2025, through August 31, 2025, in order to ensure that customer demand during the 2025 summer peak load period was met. All of these agreements were related to customers covered by the FPPAC. There were no active commodity derivative agreements as of June 30, 2026, or December 31, 2025.

At June 30, 2026 and December 31, 2025, PNM also had no commodity derivative instruments, considered economic hedges, that did not pertain to the NMPRC-approved hedging plan discussed above.

At June 30, 2026 and December 31, 2025, PNM had no amounts recognized for the legal right to reclaim cash collateral, no amounts posted as cash collateral under margin arrangements, and there were no obligations to return cash collateral.

**Non-Derivative Financial Instruments**

The carrying amounts reflected on the Condensed Consolidated Balance Sheets approximate fair value for cash, receivables, and payables due to the short period of maturity. Investment securities are carried at fair value. Investment securities consist of PNM assets held in the NDT for its share of decommissioning costs of PVNGS, a trust for PNM's share of decommissioning costs at SJGS, and trusts for PNM's share of final reclamation costs related to the coal mines serving SJGS and Four Corners. See Note 11. At June 30, 2026 and December 31, 2025, the fair value of investment securities included $445.2 million and $426.4 million for the NDT, $3.4 million and $6.0 million for the SJGS decommissioning trust, and $65.0 million and $73.2 million for the coal mine reclamation trusts.

PNM records a realized loss as an impairment for any available-for-sale debt security that has a fair value that is less than its carrying value. At June 30, 2026 and December 31, 2025, PNM had no available-for-sale debt securities for which carrying value exceeded fair value, where the impairments were considered to be "other than temporary" and included in AOCI rather than recognized in earnings. All gains and losses resulting from sales and changes in the fair value of equity securities are recognized immediately in earnings. Gains and losses recognized on the Condensed Consolidated Statements of Earnings related to investment securities in the NDT, SJGS decommissioning, and coal mine reclamation trusts are presented in the following table:

| | Three Months Ended June 30, | | Six Months Ended June 30, | |
|---|---|---|---|---|
| | 2026 | 2025 | 2026 | 2025 |
| | (In thousands) | | | |
| Equity securities: | | | | |
| Net gains from equity securities sold | $ 8,320 | $ 6,940 | $ 16,266 | $ 13,932 |
| Net gains (losses) on equity securities still held | 16,114 | 16,616 | (756) | 8,373 |
| Total net gains on equity securities | 24,434 | 23,556 | 15,510 | 22,305 |
| Available-for-sale debt securities: | | | | |
| Net gains (losses) on debt securities | (20) | — | (40) | 10 |
| Net gains on investment securities | $ 24,414 | $ 23,556 | $ 15,470 | $ 22,315 |

The proceeds and gross realized gains and losses on the disposition of securities held in the NDT, SJGS decommissioning trust, and coal mine reclamation trusts are shown in the following table. Realized gains and losses are determined by specific identification of costs of securities sold. Gross realized losses shown below exclude the (increase)/decrease in realized impairment losses of less than $0.1 million for the three and six months ended June 30, 2026, and zero for both the three and six months ended June 30, 2025.

| | Three Months Ended June 30, | | Six Months Ended June 30, | |
|---|---|---|---|---|
| | 2026 | 2025 | 2026 | 2025 |
| | (In thousands) | | | |
| Proceeds from sales | $ 219,597 | $ 108,625 | $ 329,671 | $ 198,728 |
| Gross realized gains | 29,350 | 7,859 | 37,798 | 15,541 |
| Gross realized (losses) | (21,029) | (919) | (21,531) | (1,609) |

Table of Contents

**TXNM ENERGY, INC. AND SUBSIDIARIES**
**PUBLIC SERVICE COMPANY OF NEW MEXICO AND SUBSIDIARIES**
**TEXAS-NEW MEXICO POWER COMPANY AND SUBSIDIARIES**

**NOTES TO CONDENSED CONSOLIDATED FINANCIAL STATEMENTS**
(Unaudited)

At June 30, 2026, the available-for-sale debt securities held by PNM, had the following final maturities:

| | Fair Value |
|---|---|
| | (In thousands) |
| Within 1 year | $ 24,477 |
| After 1 year through 5 years | 15,909 |
| | $ 40,386 |

**Fair Value Disclosures**

The Company determines the fair values of its derivative and other financial instruments based on the hierarchy that requires an entity to maximize the use of observable inputs and minimize the use of unobservable inputs when measuring fair value. There are three levels of inputs that may be used to measure fair value. Level 1 inputs are quoted prices (unadjusted) in active markets for identical assets or liabilities that the reporting entity has the ability to access at the measurement date. Level 2 inputs are inputs other than quoted prices included within Level 1 that are observable for the asset or liability, either directly or indirectly. Level 3 inputs are unobservable inputs for the asset or liability.

For investment securities, Level 2 fair values are provided by fund managers utilizing a pricing service. For Level 2 fair values, the pricing provider predominantly uses the market approach using bid side market values based upon a hierarchy of information for specific securities or securities with similar characteristics. Fair values of Level 2 investments in mutual funds are equal to NAV. For commodity derivatives, Level 2 fair values are determined based on market observable inputs, which are validated using multiple broker quotes, including forward price, volatility, and interest rate curves to establish expectations of future prices. Credit valuation adjustments are made for estimated credit losses based on the overall exposure to each counterparty. For the Company's long-term debt, Level 2 fair values are provided by an external pricing service. The pricing service primarily utilizes quoted prices for similar debt in active markets when determining fair value. Management of the Company independently verifies the information provided by pricing services. Uncategorized investments include common/collective investment trusts and real estate funds which are measured at NAV at the end of each reporting period. Financial statements are received for each fund and reviewed by the Company quarterly with audited financial statements received and reviewed on an annual basis. Fair value for these funds is measured using a practical expedient provided under GAAP that allows the NAV per share to be used as fair value for investments in certain entities that do not have readily determinable fair values and are considered to be investment companies. Investments valued using this practical expedient are not required to be presented within the GAAP fair value hierarchy. Items recorded at fair value by PNM on the Condensed Consolidated Balance Sheets are presented below by level of the fair value hierarchy along with gross unrealized gains on investments in available-for-sale debt securities:

| | | GAAP Fair Value Hierarchy | | |
|---|---|---|---|---|
| | Total | Quoted Prices in Active Markets for Identical Assets (Level 1) | Significant Other Observable Inputs (Level 2) | Unrealized Gains |
| | | (In thousands) | | |
| **June 30, 2026** | | | | |
| Cash and cash equivalents | $ 36,528 | $ 36,528 | $ — | |
| Equity securities: | | | | |
| Corporate stocks, common | 127,776 | 127,776 | — | |
| Mutual funds and other | 210,638 | 210,638 | — | |
| Available-for-sale debt securities: | | | | |
| U.S. government | 36,512 | 36,512 | — | $ 88 |
| Corporate and other | 3,874 | | 3,874 | 23 |
| Investments categorized within the fair value hierarchy | $ 415,328 | $ 411,454 | $ 3,874 | $ 111 |
| Uncategorized collective investment trust | 45,877 | | | |
| Real estate funds | 38,511 | | | |
| Hedge funds | 13,928 | | | |
| Total investment securities | $ 513,644 | | | |

Table of Contents

**TXNM ENERGY, INC. AND SUBSIDIARIES**
**PUBLIC SERVICE COMPANY OF NEW MEXICO AND SUBSIDIARIES**
**TEXAS-NEW MEXICO POWER COMPANY AND SUBSIDIARIES**

**NOTES TO CONDENSED CONSOLIDATED FINANCIAL STATEMENTS**
(Unaudited)

| | Total | Quoted Prices in Active Markets for Identical Assets (Level 1) | Significant Other Observable Inputs (Level 2) | Unrealized Gains |
|---|---|---|---|---|
| | | (In thousands) | | |
| **December 31, 2025** | | | | |
| Cash and cash equivalents | $ 33,469 | $ 33,469 | $ — | |
| Equity securities: | | | | |
| Corporate stocks, common | 154,790 | 154,790 | — | |
| Mutual funds and other | 202,995 | 202,995 | — | |
| Available-for-sale debt securities: | | | | |
| U.S. government | 30,619 | 30,619 | — | $ 227 |
| Corporate and other | 5,731 | — | 5,731 | 102 |
| Investments categorized within the fair value hierarchy | $ 427,604 | $ 421,873 | $ 5,731 | $ 329 |
| Uncategorized collective investment trust | 45,144 | | | |
| Real estate funds | 20,307 | | | |
| Hedge funds | 12,600 | | | |
| Total investment securities | $ 505,655 | | | |

The carrying amounts and fair values of long-term debt, all of which are considered Level 2 fair value measurements and are not recorded at fair value on the Condensed Consolidated Balance Sheets, are presented below:

| | Carrying Amount | Fair Value |
|---|---|---|
| **June 30, 2026** | (In thousands) | |
| TXNM | $ 5,415,713 | $ 5,461,759 |
| PNM | 2,859,258 | 2,745,759 |
| TNMP | 1,672,334 | 1,647,374 |
| **December 31, 2025** | | |
| TXNM | $ 5,418,564 | $ 5,506,722 |
| PNM | 2,861,897 | 2,757,316 |
| TNMP | 1,672,267 | 1,662,457 |

The carrying amount and fair value of the Company's other investments presented on the Condensed Consolidated Balance Sheets are not material and not shown in the above table.

**(8) Stock-Based Compensation**

TXNM has various stock-based compensation programs, which provide restricted stock awards, that are performance-based and time-based, under the PEP. Although certain PNM and TNMP employees are eligible to participate in the TXNM plans, PNM and TNMP do not have separate employee stock-based compensation plans. Performance stock awards granted under the PEP are awarded for a three-year, overlapping performance period. Performance stock awards with performance periods ended or ending in 2028 do not include market targets. Performance stock awards with performance periods ending in 2026 and 2027 are subject to achieving both performance and market targets. Other awards of restricted stock are only subject to time-based vesting requirements. Additional information concerning stock-based compensation under the PEP is contained in Note 12 of the Notes to Consolidated Financial Statements in the 2025 Annual Reports on Form 10-K.

Restricted stock under the PEP refers to awards of stock subject to vesting, performance, or market conditions rather than to shares with contractual post-vesting restrictions. Generally, the awards vest ratably over three years from the grant date of the award. However, awards with performance or market conditions vest upon satisfaction of those conditions. In addition, plan provisions provide that upon retirement, participants become 100% vested in certain stock awards. The vesting period for awards of restricted stock to non-employee members of the Board is one-year.

Table of Contents

**TXNM ENERGY, INC. AND SUBSIDIARIES**
**PUBLIC SERVICE COMPANY OF NEW MEXICO AND SUBSIDIARIES**
**TEXAS-NEW MEXICO POWER COMPANY AND SUBSIDIARIES**

**NOTES TO CONDENSED CONSOLIDATED FINANCIAL STATEMENTS**
(Unaudited)

The stock-based compensation expense related to restricted stock awards without performance or market conditions to participants that are retirement eligible on the grant date is recognized immediately at the grant date and is not amortized. Compensation expense for other such awards is amortized over the shorter of the requisite vesting period or the period until the participant becomes retirement eligible. Compensation expense for performance-based shares is recognized ratably over the performance period as required service is provided and is adjusted periodically to reflect the level of achievement expected to be attained. Compensation expense related to market-based shares is recognized ratably over the measurement period, regardless of the actual level of achievement, provided the employees meet their service requirements. At June 30, 2026, TXNM had unrecognized expense related to stock awards of $9.4 million, which is expected to be recognized over an average of 1.95 years.

The grant date fair value for restricted stock and stock awards with internal TXNM performance targets is determined based on the market price of TXNM common stock on the date of the agreements reduced by the present value of future dividends that will not be received prior to vesting. The grant date fair value is applied to the total number of shares that are anticipated to vest, although the number of performance shares that ultimately vest cannot be determined until after the performance periods end. The grant date fair value of stock awards with market targets were determined using Monte Carlo simulation models, which provide grant date fair values that include an expectation of the number of shares to vest at the end of the measurement period. The following table summarizes the weighted-average assumptions used to determine the awards grant date fair value:

| | Six Months Ended June 30, | |
|---|---|---|
| **Restricted Shares and Performance Based Shares** | **2026** | **2025** |
| Expected quarterly dividends per share | $ 0.4225 | $ 0.4075 |
| Risk-free interest rate | 3.47 % | 4.00 % |
| **Market-Based Shares** | | |
| Dividend yield | N/A | 3.12% |
| Expected volatility | N/A | 15.67% |
| Risk-free interest rate | N/A | 4.12% |

The following table summarizes activity in restricted stock awards, including performance-based and market-based shares for the six months ended June 30, 2026:

| | Restricted Stock | |
|---|---|---|
| | **Shares** | **Weighted-Average Grant Date Fair Value** |
| **Outstanding at December 31, 2025** | 227,804 | $ 42.30 |
| Granted | 117,999 | 53.80 |
| Released | (107,991) | 43.01 |
| Forfeited | (650) | 47.11 |
| **Outstanding at June 30, 2026** | 237,162 | $ 47.69 |

Included, as granted and released, in the table above are 6,297 of restricted stock awards for participants who retired and immediately vested. Excluded from the table above are 242,177, 195,119, and 205,671 shares for the three-year performance periods ending in 2026, 2027, and 2028 that will be awarded if all performance and market criteria are achieved at maximum levels and all executives remain eligible.

The following table provides additional information concerning restricted stock activity, including performance-based and market-based shares:

| | Six Months Ended June 30, | |
|---|---|---|
| **Restricted Stock** | **2026** | **2025** |
| Weighted-average grant date fair value | $ 53.80 | $ 47.61 |
| Total fair value of restricted shares that vested (in thousands) | $ 6,366 | $ 6,374 |

Table of Contents

**TXNM ENERGY, INC. AND SUBSIDIARIES**
**PUBLIC SERVICE COMPANY OF NEW MEXICO AND SUBSIDIARIES**
**TEXAS-NEW MEXICO POWER COMPANY AND SUBSIDIARIES**

**NOTES TO CONDENSED CONSOLIDATED FINANCIAL STATEMENTS**
(Unaudited)

## (9) Financing

The Company's financing strategy includes both short-term and long-term borrowings and the issuance of equity securities. The Company utilizes short-term revolving credit facilities, as well as cash flows from operations, to provide funds for both construction and operating expenditures. Depending on market and other conditions, the Company will periodically sell long-term debt, enter into term loan arrangements, or enter into equity arrangements and use the proceeds to reduce borrowings under the revolving credit facilities and commercial paper or refinance other debt. Each of the Company's revolving credit facilities, term loans, and other debt agreements contain a single financial covenant that requires the maintenance of a debt-to-capitalization ratio. For the TXNM agreements, this ratio must be maintained at less than or equal to 70%, and for the PNM and TNMP agreements, this ratio must be maintained at less than or equal to 65%. The Company's revolving credit facilities, term loans, and other debt agreements generally also contain customary covenants, events of default, cross-default provisions, and change-of-control provisions. PNM must obtain NMPRC approval for any financing transaction having a maturity of more than 18 months. In addition, PNM files its annual informational financing filing and short-term financing plan with the NMPRC. Additional information concerning financing activities is contained in Note 7 of the Notes to Consolidated Financial Statements in the 2025 Annual Reports on Form 10-K.

On February 28, 2025, TXNM filed a shelf registration that provides for the issuance of various types of debt and equity securities. The TXNM shelf registration statement expires in February 2028.

At December 31, 2025, PNM had a shelf registration statement, which was set to expire in May 2026, with capacity for the issuance of up to $650.0 million of SUNs. On February 20, 2026, PNM filed a post-effective amendment to the registration statement to deregister any and all securities that remained unsold, effectively terminating all offerings of the securities pursuant to the registration statement.

**Financing Activities**

On July 21, 2026, PNM entered into a $195.0 million term loan agreement (the "PNM 2026 Term Loan"), among PNM, the lenders party thereto and Canadian Imperial Bank of Commerce, New York Branch, as administrative agent. PNM used the proceeds of the PNM 2026 Term Loan to repay borrowings under the PNM 2025 Term Loan (defined below) which matured on July 21, 2026. Borrowings under the PNM 2026 Term Loan must be repaid on or before January 21, 2028.

On July 17, 2026, TXNM entered into a $400.0 million delayed-draw term loan agreement (the "TXNM 2026 Delayed-Draw Term Loan", among TXNM and Wells Fargo Bank, National Association, as administrative agent. Draws on the TXNM 2026 Delayed-Draw Term Loan bear interest at a variable rate, and mature on January 17, 2029. On July 22, 2026, TXNM drew the full amount available under the TXNM 2026 Delayed-Draw Term Loan and used such amount to fully repay the $400.0 million previously received under the May 2025 Stock Purchase Agreement (defined below). See Note 12.

On May 1, 2026, TXNM, PNM, and TNMP each established commercial paper programs (respectively, the "TXNM Commercial Paper Program", the "PNM Commercial Paper Program", the "TNMP Commercial Paper Program", and collectively the "Programs") pursuant to which they may issue from time to time short-term, unsecured commercial paper notes (respectively, the "TXNM Commercial Paper Notes", the "PNM Commercial Paper Notes", the "TNMP Commercial Paper Notes", and collectively the "Notes") under the exemption from registration contained in Section 4(a)(2) of the Securities Act of 1933, as amended (the "Securities Act"). Amounts available under the Programs may be borrowed, repaid and re-borrowed from time to time, with the aggregate face or principal amount of the Notes outstanding under the Programs at any time not to exceed $300.0 million for TXNM, $400.0 million for PNM, and $300.0 million for TNMP. The Notes will have maturities of up to 364 days from the date of issue and net proceeds will be used for general corporate purposes. Each of TXNM, PNM and TNMP have agreed to maintain, at all times, unused available borrowing capacity under their respective revolving credit agreements (except for the PNM New Mexico Credit Agreement) in an amount at least equal to the amount of Notes outstanding at any time. See Short-term debt below for balances outstanding as of June 30, 2026.

On March 3, 2026, TXNM entered into a distribution agreement (the "Distribution Agreement") with BofA Securities, Inc., MUFG Securities Americas Inc., and Scotia Capital (USA) Inc., as sales agents and Bank of America, N.A., MUFG Securities EMEA plc, and The Bank of Nova Scotia, as forward purchasers, pursuant to which the Company may sell, from time to time, up to an aggregate sales price of $125.0 million of its common stock, no par value, through the sales agents (the "TXNM 2026 ATM Program"). Sales of the shares made pursuant to the Distribution Agreement, if any, may be made in "at the market offerings" as defined in Rule 415 of the Securities Act. TXNM did not initially receive any proceeds upon the execution of this agreement.

Table of Contents

**TXNM ENERGY, INC. AND SUBSIDIARIES**
**PUBLIC SERVICE COMPANY OF NEW MEXICO AND SUBSIDIARIES**
**TEXAS-NEW MEXICO POWER COMPANY AND SUBSIDIARIES**

**NOTES TO CONDENSED CONSOLIDATED FINANCIAL STATEMENTS**
(Unaudited)

Beginning on March 3, 2026, TXNM sold, through the sales agents listed above, an aggregate of 2,123,544 shares of TXNM common stock as set forth in the table below and used the proceeds to make cash equity contributions to PNM and for other corporate purposes.

Gross cash proceeds shown below were reduced by $1.3 million in issuance costs resulting in net cash proceeds of $123.7 million.

| Settlement date | Shares | Settlement price | Settlement amount |
|---|---|---|---|
| | | | (in thousands) |
| March 4, 2026 | 219,722 | $ 58.97 | $ 12,957 |
| March 5, 2026 | 267,770 | 58.99 | 15,796 |
| March 6, 2026 | 219,199 | 58.91 | 12,913 |
| March 9, 2026 | 226,420 | 58.65 | 13,280 |
| March 9, 2026 | 102,324 | 58.86 | 6,023 |
| March 10, 2026 | 144,796 | 58.80 | 8,514 |
| March 11, 2026 | 175,000 | 58.70 | 10,273 |
| March 11, 2026 | 132,415 | 58.84 | 7,791 |
| March 12, 2026 | 186,448 | 58.63 | 10,931 |
| March 18, 2026 | 91,872 | 58.54 | 5,379 |
| March 23, 2026 | 19,935 | 58.28 | 1,162 |
| May 18, 2026 | 295,300 | 59.15 | 17,467 |
| May 19, 2026 | 42,343 | 59.35 | 2,513 |
| | 2,123,544 | | $ 124,999 |

At December 31, 2025, TXNM had $550.0 million aggregate principal amount of Convertible Notes outstanding. The Convertible Notes are unsecured obligations of the Company and rank junior and subordinate in right of payment to the prior payment in full of the Company's existing and future senior indebtedness. The Convertible Notes bear interest at a rate of 5.75% per year, payable semi-annually in arrears on June 1 and December 1, and mature on June 1, 2054, unless earlier converted, redeemed, or repurchased in accordance with their terms. Additional details related to the Convertible Notes may be found in Note 7 of the Notes to Consolidated Financial Statements in the 2025 Annual Reports on Form 10-K.

On January 2, 2026, TXNM notified holders of the Convertible Notes that the Convertible Notes were convertible, at the option of the holders, over a period beginning on January 1, 2026, and ending at the close of business on March 31, 2026, (the "First Quarter 2026 Conversion Period"). The Convertible Notes were convertible at a conversion rate of 22.5248 shares of common stock per $1,000 principal amount of Convertible Notes, which was equivalent to a conversion price of approximately $44.40 per share of common stock. On March 26, 2026, the conversion rate was increased to 22.5382 shares of common stock per $1,000 principal amount of Convertible Notes, which is equivalent to a conversion price of approximately $44.37 per share of common stock.

On March 31, 2026, it was determined that the Convertible Notes would once again become convertible. On March 31, 2026, TXNM notified holders of the Convertible Notes that the Convertible Notes are convertible, at the option of the holders, over a period beginning on April 1, 2026, and ending at the close of business on June 30, 2026, (the "Second Quarter 2026 Conversion Period"). On April 27, 2026, the conversion rate for the Convertible Notes was increased to 22.5517 shares of common stock per $1,000 principal amount of Convertible Notes, which is equivalent to a conversion price of approximately $44.34 per share of common stock.

With respect to the First Quarter 2026 Conversion Period and the Second Quarter 2026 Conversion Period, the Convertible Notes became convertible at the option of the holders because the last reported sale price of TXNM's common stock, for at least 20 trading days during the period of 30 consecutive trading days ending on, and including, the last trading day of the preceding calendar quarter, was greater than or equal to 130% of the conversion price in effect on each applicable trading day during such 30 consecutive trading day period.

During the First and Second Quarter Conversion Periods, holders of approximately $0.2 million of Convertible Notes elected to convert their notes. For each $1,000 principal amount of Convertible Notes converted, the holders receive $1,000 principal amount of non-convertible 5.75% junior subordinated notes, due 2054 and shares of TXNM common stock with respect to the conversion value based on the trading price over a 60-trading day observation period. As of June 30, 2026, $549.8 million Convertible Notes remain outstanding.

Table of Contents

**TXNM ENERGY, INC. AND SUBSIDIARIES**
**PUBLIC SERVICE COMPANY OF NEW MEXICO AND SUBSIDIARIES**
**TEXAS-NEW MEXICO POWER COMPANY AND SUBSIDIARIES**

**NOTES TO CONDENSED CONSOLIDATED FINANCIAL STATEMENTS**
(Unaudited)

On July 31, 2025, PNM entered into an agreement (the "PNM July 2025 Note Purchase Agreement") with institutional investors for the sale and issuance of $350.0 million aggregate principal amount of two series of SUNs (the "PNM July 2025 SUNs") offered in private placement transactions. The PNM July 2025 SUNs were issued on July 31, 2025. PNM issued $200.0 million of the PNM July 2025 SUNs at 5.47%, due July 31, 2031, and another $150.0 million at 6.03%, due July 31, 2036. PNM used the proceeds from the PNM July 2025 SUNs to repay the PNM $250.0 million SUNs and for general corporate purposes. The PNM July 2025 Note Purchase Agreement includes the customary covenants discussed above. In the event of a change of control, PNM will be required to offer to prepay the PNM July 2025 SUNs at par. Although there are customary change of control provisions in the PNM debt agreements, the change of control provisions in the agreements, including the PNM July 2025 Note Purchase Agreement, will not be triggered by the closing of the Merger. PNM has the right to redeem any or all of the PNM July 2025 SUNs prior to their maturities, subject to payment of a customary make-whole premium.

On July 21, 2025, TNMP entered into an agreement with institutional investors for the sale of $1,084.3 million aggregate principal amount of six series of TNMP first mortgage bonds (the "TNMP July 2025 FMBs") offered in private placement transactions. TNMP issued the bonds on July 21, 2025, with the following terms:

| Principal Amount | Interest Rate | Due Date |
|---|---|---|
| (in thousands) | | |
| $ 245,000 | 4.83 % | July 31, 2030 |
| 245,000 | 5.12 | July 31, 2032 |
| 240,000 | 5.44 | July 31, 2035 |
| 100,000 | 5.54 | July 31, 2037 |
| 154,300 | 5.93 | July 31, 2045 |
| 100,000 | 6.02 | July 31, 2055 |
| $ 1,084,300 | | |

The proceeds were used to repay borrowings under the TNMP Merger Backstop Term Loan (defined below). The TNMP July 2025 FMBs are subject to continuing compliance with the covenants set forth in the governing supplemental indentures. In the event of certain changes of control of TNMP, TNMP will be required to offer to prepay the TNMP July 2025 FMBs at par. Although there are customary change of control provisions in the TNMP July 2025 FMBs, the change of control provisions will not be triggered by the closing of the Merger. TNMP has the right to redeem any or all of the TNMP July 2025 FMBs prior to their maturity, subject to payment of a customary make-whole premium.

At June 30, 2025, TXNM had a series of treasury lock agreements, with terms ranging from 5 years to 30 years, aggregating a total notional amount of $730.0 million to reduce interest rate exposure on the TNMP July 2025 FMBs that were issued in July 2025. The treasury lock agreements had an average fixed rate of 4.18% and TXNM designated them as cash flow hedges, measured at fair value, which were recorded as a loss of $2.5 million in Other current liabilities at June 30, 2025. Fair values, provided by an external pricing service, were determined using Level 2 inputs of quoted prices for similar agreements in active markets. On July 1, 2025, TXNM terminated all of the treasury lock agreements, realizing a pre-tax net loss of $1.6 million recorded in Accumulated other comprehensive income. The loss will be amortized through interest expense over a range of 5 to 30 years, in accordance with the terms of the TNMP July 2025 FMBs issued July 21, 2025.

On June 24, 2025, TXNM entered into an agreement whereby TXNM sold, in a private placement transaction, and the purchasers named therein agreed to purchase 3,615,003 shares of TXNM common stock for a purchase price of $55.325 per share (for an aggregate amount of approximately $200 million). The closing of the issuance occurred on June 27, 2025. TXNM used the proceeds to repay an equal amount under the TXNM 2023 Term Loan. TXNM granted the purchasers customary registration rights with respect to the shares, pursuant to which TXNM registered the shares for resale with the SEC on August 8, 2025.

The documents governing an aggregate $1,505.0 million of TNMP's outstanding FMBs ("TNMP FMBs") obligated TNMP to offer (the "Offer"), within 30 business days following the signing of the Merger Agreement, to prepay all outstanding TNMP FMBs at 100% of the principal amount, plus accrued and unpaid interest thereon, but without any make-whole amount or other premium. On June 14, 2025, the Offer expired and $1,084.3 million in aggregate principal amount of the bonds were validly tendered. TNMP accepted for purchase all validly tendered bonds. On June 24, 2025, holders whose bonds were validly tendered and accepted for purchase received 100% of the aggregate principal amount of bonds prepaid plus accrued and unpaid interest using funds drawn under the TNMP Merger Backstop Term Loan, discussed below. On November 6, 2025,

Table of Contents

**TXNM ENERGY, INC. AND SUBSIDIARIES**
**PUBLIC SERVICE COMPANY OF NEW MEXICO AND SUBSIDIARIES**
**TEXAS-NEW MEXICO POWER COMPANY AND SUBSIDIARIES**

**NOTES TO CONDENSED CONSOLIDATED FINANCIAL STATEMENTS**
(Unaudited)

TNMP entered into an agreement and supplemental indenture to amend the documents governing $417.7 million of TNMP FMBs. The supplemental indenture amends the requirement for TNMP to provide certain financial reports and amends the definition of change of control under certain supplemental indentures such that TNMP will no longer be required to make an offer to prepay the aggregate $417.7 million TNMP FMBs upon closing of the Merger.

The documents governing an aggregate $3.0 million of TNMP FMBs still require TNMP to make another offer, within 30 business days of closing of the Merger, to prepay the remaining outstanding TNMP FMBs, totaling $3.0 million, at par. TNMP will make such offer to prepay the TNMP FMBs in accordance with the terms of the TNMP FMBs; however, holders of the TNMP FMBs are not required to tender their TNMP FMBs and may accept or reject such offer to prepay.

The information in this Form 10-Q is for informational purposes only and is neither an offer to purchase, nor a solicitation of an offer to sell, subscribe for or buy any securities in any jurisdiction pursuant to the proposed transactions or otherwise, nor shall there be any sale, issuance or transfer of securities in any jurisdiction in contravention of applicable law. Similar to the offer to prepay made after signing the Merger Agreement, the post-Merger closing offer to prepay the TNMP FMBs will be made only pursuant to an offer to prepay, which will set forth the terms and conditions of the offer to prepay.

On May 27, 2025, TXNM physically settled all shares under the TXNM 2024 ATM Program by issuing 1,104,641 shares to the forward purchasers, aggregating net proceeds of $49.6 million, including $0.5 million for equity issuance costs. TXNM used the proceeds from the settled shares to repay borrowings under the TXNM Revolving Credit Facility. Following this settlement, no additional shares of TXNM's common stock remain subject to future settlement under the TXNM 2024 ATM Program.

On May 18, 2025, the execution of the Merger Agreement constituted a "Change of Control" under certain TXNM and TNMP debt agreements. Under each of the specified debt agreements, a "Change of Control" constituted an "Event of Default," pursuant to which the lender parties thereto had the right to accelerate the indebtedness under the debt agreements. The definition of Change of Control under the PNM debt agreements and PNM note purchase agreements were not triggered by the execution of the Merger Agreement.

On May 23, 2025, TXNM and TNMP entered into amendments in connection with the TXNM Revolving Credit Facility, TXNM 2023 Term Loan, WFB LOC Facility, and TNMP Revolving Credit Facility with the lender parties thereto (the "Lender Consents") to (i) amend the definition of "Change of Control" in such agreements such that the entry into the Merger Agreement would not constitute a Change of Control and (ii) waive the Event of Default arising from entry into the Merger Agreement. The amended Change of Control definition under the TXNM and TNMP debt agreements will, however, be triggered again upon the closing of the Merger. On December 19, 2025, TXNM and TNMP entered into another amendment which provided, among other administrative updates, that the closing of the Merger shall not be deemed to be a change of control under the terms of the TXNM Revolver and TNMP Revolver which would otherwise result in an event of default thereunder. The Change of Control provisions in the PNM debt agreements are not triggered by the close of the Merger.

To ensure sufficient liquidity pending the Lender Consents, on May 18, 2025, TXNM entered into a $910.0 million 364-day revolving credit facility (the "TXNM Merger Backstop Revolving Facility") between TXNM, the lenders party thereto, and Wells Fargo Bank, National Association, as administrative agent. The TXNM Merger Backstop Revolving Facility was available to provide liquidity in the event the Company was unable to obtain the Lender Consents. On May 19, 2025, TXNM borrowed approximately $4.0 million under the TXNM Merger Backstop Revolving Facility and subsequently repaid the entire balance by May 21, 2025. The TXNM Merger Backstop Revolving Facility expired according to its terms as TXNM did not make any additional borrowings thereunder by the commitment termination date of May 23, 2025, and the Company was able to obtain the Lender Consents.

On May 18, 2025, concurrent with the execution of the TXNM Merger Backstop Revolving Facility, TNMP entered into a $1,505.0 million 364-day delayed-draw term loan (the "TNMP Merger Backstop Term Loan") between TNMP, the lenders party thereto, and Wells Fargo Bank, National Association, as administrative agent. The TNMP Merger Backstop Term Loan was available to provide liquidity to repurchase TNMP's FMBs that were tendered for prepayment pursuant to the Offer. Borrowings under the TNMP Merger Backstop Term Loan were short-term in nature and bore interest at a variable rate. On July 21, 2025, TNMP issued the TNMP July 2025 FMBs and used the proceeds to repay the outstanding principal balance under the TNMP Merger Backstop Term Loan on July 22, 2025, terminating that agreement.

On May 18, 2025, concurrent with the execution of the Merger Agreement, TXNM entered into an agreement (the "May 2025 Stock Purchase Agreement") whereby TXNM sold, in a private placement transaction, 8,000,000 shares of TXNM common stock for a purchase price of $50.00 per share (aggregating $400.0 million). The consummation of the May 2025

Table of Contents

**TXNM ENERGY, INC. AND SUBSIDIARIES**
**PUBLIC SERVICE COMPANY OF NEW MEXICO AND SUBSIDIARIES**
**TEXAS-NEW MEXICO POWER COMPANY AND SUBSIDIARIES**

**NOTES TO CONDENSED CONSOLIDATED FINANCIAL STATEMENTS**
(Unaudited)

Stock Purchase Agreement occurred on June 2, 2025. TXNM used the proceeds to make a cash equity contribution of $160.0 million to TNMP, to repay borrowings under the TXNM Revolving Credit Facility, and for general corporate purposes. On July 2, 2026, the NMPRC ruled that the May 2025 Stock Purchase Agreement is void and of no effect. See Note 12.

On May 16, 2025, TXNM paid the remaining balance due under its TXNM 2021 Delayed Draw Term Loan in accordance with its terms.

On April 23, 2025, PNM entered into an agreement (the "PNM April 2025 Note Purchase Agreement") with institutional investors for the sale and issuance of $300.0 million aggregate principal amount of two series of SUNs (the "PNM April 2025 SUNs") offered in private placement transactions. The PNM April 2025 SUNs were issued on April 23, 2025. PNM issued $125.0 million of the PNM April 2025 SUNs at 5.75%, due June 1, 2032, and another $175.0 million at 6.13%, due June 1, 2037. PNM used proceeds from the PNM April 2025 SUNs for the repayment of existing indebtedness, funding of capital expenditures, and general corporate purposes. The PNM April 2025 Note Purchase Agreement includes the customary covenants discussed above. In the event of a change of control, PNM will be required to offer to prepay the PNM April 2025 SUNs at par. Although there are customary change of control provisions in the PNM debt agreements, the change of control provisions in the agreements, including the PNM April 2025 Note Purchase Agreement, are not triggered by the closing of the Merger. PNM has the right to redeem any or all of the PNM April 2025 SUNs prior to their maturities, subject to payment of a customary make-whole premium.

On February 14, 2025, TNMP entered into an agreement (the "TNMP February 2025 Bond Purchase Agreement") with institutional investors for the sale and issuance of $140.0 million aggregate principal amount of first mortgage bonds (the "TNMP February 2025 Bonds") offered in private placement transactions. TNMP issued all $140.0 million of the TNMP February 2025 Bonds on February 14, 2025, at a 5.19% interest rate, due April 1, 2031. The proceeds were used to repay borrowings under the TNMP Revolving Credit Facility, for funding of capital expenditures, and for other corporate purposes. The TNMP February 2025 Bonds are subject to continuing compliance with the representations, warranties, and covenants set forth in the supplemental indentures governing the TNMP February 2025 Bonds. The terms of the supplemental indentures governing the TNMP February 2025 Bonds include the customary covenants discussed above. The definition of change of control in the supplemental indentures governing the TNMP February 2025 Bonds were triggered by the execution of the Merger Agreement and the TNMP February 2025 Bonds were included in an offer to prepay, with $40.0 million validly tendered by the bondholders and accepted for purchase by TNMP in July 2025. The definition of change of control for the remaining $100.0 million of TNMP February 2025 Bonds was successfully amended and will not be triggered by the close of the Merger. TNMP has the right to redeem any or all of the TNMP February 2025 Bonds prior to their maturity, subject to payment of a customary make-whole premium.

On January 21, 2025, PNM entered into a $195.0 million term loan agreement (the "PNM 2025 Term Loan"), among PNM, the lenders party thereto and Canadian Imperial Bank of Commerce, New York Branch, as administrative agent. PNM used the proceeds of the PNM 2025 Term Loan to repay borrowings under the PNM Revolving Credit Facility and the PNM New Mexico Credit Facility, and for general corporate purposes. The PNM 2025 Term Loan bears interest at a variable rate, which was 4.65% at June 30, 2026, and was repaid on July 21, 2026, with the proceeds from the PNM 2026 Term Loan.

**Short-term Debt and Liquidity**

As of June 30, 2026, the TXNM Revolving Credit Facility had a financing capacity of $300.0 million, and the PNM Revolving Credit Facility had a financing capacity of $400.0 million. Each of these facilities matures on March 29, 2030, and contains one one-year extension option that, if exercised, would extend the maturity to March 2031, subject to approval by a majority of the lenders. On December 19, 2025, when the first extension option was exercised, one lender in each of the revolving credit facilities failed to agree to the extension. As a result, effective March 30, 2029, the TXNM Revolving Credit Facility capacity will adjust to $265.4 million, and the PNM Revolving Credit Facility capacity will adjust to $354.1 million. PNM also has the $40.0 million PNM New Mexico Credit Facility with a maturity of May 31, 2030. As of June 30, 2026, the TNMP Revolving Credit Facility has a capacity of $300.0 million and is secured by $300.0 million aggregate principal amount of TNMP first mortgage bonds and has a maturity of March 29, 2030, with one one-year extension option that, if exercised, would extend the maturity to March 2031, subject to approval by a majority of the lenders. On December 19, 2025, when the first extension option was exercised, one lender failed to agree to the extension and as a result, effective March 30, 2029, the TNMP Revolving Credit Facility capacity will adjust to $277.0 million. As discussed above, Notes issued under the Commercial Paper Programs, effectively reduce the available capacity on each of the revolving credit facilities, except the PNM New Mexico Credit Facility. Variable interest rates under the TXNM, PNM, and TNMP revolving credit facilities and Notes issued under the Commercial Paper Programs are based on SOFR.

Table of Contents

**TXNM ENERGY, INC. AND SUBSIDIARIES**
**PUBLIC SERVICE COMPANY OF NEW MEXICO AND SUBSIDIARIES**
**TEXAS-NEW MEXICO POWER COMPANY AND SUBSIDIARIES**

**NOTES TO CONDENSED CONSOLIDATED FINANCIAL STATEMENTS**
(Unaudited)

Short-term debt outstanding consists of:

| | June 30, 2026 | | December 31, 2025 | |
|---|---|---|---|---|
| | Balance Outstanding | Weighted Average Interest Rate | Balance Outstanding | Weighted Average Interest Rate |
| | (In thousands) | | (In thousands) | |
| PNM: | | | | |
| PNM Revolving Credit Facility | $ 175,000 | 4.90% | $ 138,800 | 5.04% |
| PNM New Mexico Credit Facility | 40,000 | 5.00 | 40,000 | 5.08 |
| | 215,000 | | 178,800 | |
| TNMP: | | | | |
| TNMP Revolving Credit Facility | 93,500 | 4.52 | — | — |
| TNMP Commercial Paper Notes | 15,000 | 4.10 | — | — |
| | 108,500 | | — | |
| TXNM: | | | | |
| TXNM Revolving Credit Facility | 115,400 | 5.15 | 2,600 | 5.16 |
| TXNM Commercial Paper Notes | 44,100 | 4.19 | — | — |
| | $ 483,000 | | $ 181,400 | |

In addition to the above borrowings, TXNM, PNM, and TNMP had letters of credit outstanding of $3.1 million, zero, and zero at June 30, 2026, that reduce the available capacity under their respective revolving credit facilities. TXNM also had $19.3 million of letters of credit outstanding under the WFB LOC Facility. The above table excludes intercompany debt. As of June 30, 2026 and December 31, 2025, neither PNM nor TNMP had any intercompany borrowings from TXNM.

PNM has $3.7 million and $3.8 million in scheduled principal payments due for the ETBC I Securitized Bonds in August 2026 and February 2027. PNM also has $100.3 million of 0.875% PCRBs outstanding with a mandatory tender date of October 1, 2026, and $120.0 million under the PNM November 2025 Term Loan due in May 2027. The Company's debt arrangements have various maturities and expiration dates. Additional information on debt maturities is contained in Note 7 of the Notes to Consolidated Financial Statements in the 2025 Annual Reports on Form 10-K.

**(10) Pension and Other Postretirement Benefit Plans**

TXNM and its subsidiaries maintain qualified defined benefit pension plans, postretirement benefit plans providing medical and dental benefits, and executive retirement programs (collectively, the "PNM Plans" and "TNMP Plans"). TXNM maintains the legal obligation for the benefits owed to participants under these plans. The periodic costs or income of the PNM Plans and TNMP Plans are included in regulated rates to the extent attributable to regulated operations. The Company presents the service cost component of its net periodic benefit costs in administrative and general expenses and the non-service costs components in other income (deductions), net of amounts capitalized or deferred to regulatory assets and liabilities, on the Condensed Consolidated Statements of Earnings. PNM and TNMP receive a regulated return on the amounts funded for pension and OPEB plans in excess of accumulated periodic cost or income to the extent included in retail rates (a "prepaid pension asset").

Additional information concerning pension and OPEB plans is contained in Note 11 of the Notes to Consolidated Financial Statements in the 2025 Annual Reports on Form 10-K. Annual net periodic benefit cost for the plans is actuarially determined using the methods and assumptions set forth in that note and is recognized ratably throughout the year. Differences between TNMP's annual net periodic costs (income) and amounts included in its regulated rates are deferred to regulatory assets or liabilities, for recovery or refund in future rate proceedings.

Table of Contents

**TXNM ENERGY, INC. AND SUBSIDIARIES**
**PUBLIC SERVICE COMPANY OF NEW MEXICO AND SUBSIDIARIES**
**TEXAS-NEW MEXICO POWER COMPANY AND SUBSIDIARIES**

**NOTES TO CONDENSED CONSOLIDATED FINANCIAL STATEMENTS**
(Unaudited)

**PNM Plans**

The following table presents the components of the PNM Plans' net periodic benefit cost:

| | Three Months Ended June 30, | | | | | |
|---|---|---|---|---|---|---|
| | Pension Plan | | OPEB Plan | | Executive Retirement Program | |
| | 2026 | 2025 | 2026 | 2025 | 2026 | 2025 |
| | (In thousands) | | | | | |
| **Components of Net Periodic Benefit Cost** | | | | | | |
| Service cost | $ — | $ — | $ — | $ — | $ — | $ — |
| Interest cost | 3,822 | 5,385 | 537 | 566 | 103 | 122 |
| Expected return on plan assets | (5,608) | (7,459) | (1,349) | (1,384) | — | — |
| Amortization of net loss | 2,593 | 3,124 | — | — | 34 | 47 |
| Amortization of prior service cost | — | — | — | — | — | — |
| **Net Periodic Benefit Cost (Income)** | $ 807 | $ 1,050 | $ (812) | $ (818) | $ 137 | $ 169 |

| | Six Months Ended June 30, | | | | | |
|---|---|---|---|---|---|---|
| | Pension Plan | | OPEB Plan | | Executive Retirement Program | |
| | 2026 | 2025 | 2026 | 2025 | 2026 | 2025 |
| | (In thousands) | | | | | |
| **Components of Net Periodic Benefit Cost** | | | | | | |
| Service cost | $ — | $ — | $ — | $ — | $ — | $ — |
| Interest cost | 7,644 | 10,770 | 1,074 | 1,133 | 206 | 244 |
| Expected return on plan assets | (11,217) | (14,917) | (2,699) | (2,768) | — | — |
| Amortization of net loss | 5,186 | 6,247 | — | — | 68 | 94 |
| Amortization of prior service cost | — | — | — | — | — | — |
| **Net Periodic Benefit Cost (Income)** | $ 1,613 | $ 2,100 | $ (1,625) | $ (1,635) | $ 274 | $ 338 |

PNM did not make any contributions to its pension plan trust in the three and six months ended June 30, 2026 and 2025 and does not anticipate making any contributions to the pension plan in the remaining months of 2026 through 2030 based on current law, funding requirements, and estimates of portfolio performance. Funding assumptions were developed using a discount rate of 5.5%. Actual amounts to be funded in the future will be dependent on the actuarial assumptions at that time, including the appropriate discount rate. PNM may make additional contributions at its discretion. PNM did not make any cash contributions to the OPEB trust in the three and six months ended June 30, 2026 and 2025, however, a portion of the disbursements attributable to the OPEB trust is paid by PNM and are therefore considered to be contributions to the OPEB plan. Payments by PNM on behalf of the PNM OPEB plan were $0.9 million and $1.4 million for the three and six months ended June 30, 2026, and $0.1 million for the three and six months ended June 30, 2025. These payments are expected to total $3.2 million in 2026 and $11.2 million for 2027-2030. Disbursements under the executive retirement program, which are funded by PNM and considered to be contributions to the plan, were $0.2 million and $0.5 million in the three and six months ended June 30, 2026, and $0.2 million and $0.6 million in the three and six months ended June 30, 2025, and are expected to total $1.1 million during 2026 and $3.8 million for 2027-2030.

Table of Contents

**TXNM ENERGY, INC. AND SUBSIDIARIES**
**PUBLIC SERVICE COMPANY OF NEW MEXICO AND SUBSIDIARIES**
**TEXAS-NEW MEXICO POWER COMPANY AND SUBSIDIARIES**

**NOTES TO CONDENSED CONSOLIDATED FINANCIAL STATEMENTS**
(Unaudited)

**TNMP Plans**

The following table presents the components of the TNMP Plans' net periodic benefit cost:

| | Three Months Ended June 30, | | | |
|---|---|---|---|---|
| | Pension Plan | | OPEB Plan | |
| | 2026 | 2025 | 2026 | 2025 |
| | (In thousands) | | | |
| **Components of Net Periodic Benefit Cost** | | | | |
| Service cost | $ — | $ — | $ 5 | $ 4 |
| Interest cost | 481 | 536 | 87 | 93 |
| Expected return on plan assets | (739) | (733) | (108) | (120) |
| Amortization of net (gain) loss | 210 | 168 | (89) | (124) |
| Amortization of prior service cost | — | — | 8 | — |
| **Net Periodic Benefit Cost (Income)** | $ (48) | $ (29) | $ (97) | $ (147) |

| | Six Months Ended June 30, | | | |
|---|---|---|---|---|
| | Pension Plan | | OPEB Plan | |
| | 2026 | 2025 | 2026 | 2025 |
| | (In thousands) | | | |
| **Components of Net Periodic Benefit Cost** | | | | |
| Service cost | $ — | $ — | $ 9 | $ 8 |
| Interest cost | 962 | 1,072 | 174 | 186 |
| Expected return on plan assets | (1,478) | (1,466) | (216) | (240) |
| Amortization of net (gain) loss | 421 | 336 | (177) | (248) |
| Amortization of prior service cost | — | — | 17 | — |
| **Net Periodic Benefit Cost (Income)** | $ (95) | $ (58) | $ (193) | $ (294) |

TNMP did not make any contributions to its pension plan trust in the three and six months ended June 30, 2026 and 2025 and does not anticipate making any contributions to the pension plan in the remaining months of 2026 through 2030 based on current law, funding requirements, and estimates of portfolio performance. Funding assumptions were developed using a discount rate of 5.5% in 2026. Actual amounts to be funded in the future will depend on the actuarial assumptions at that time, including the appropriate discount rate. TNMP may make additional contributions at its discretion. TNMP did not make any contributions to the OPEB trust in the three and six months ended June 30, 2026 and 2025 and does not expect to make any contributions to the OPEB trust during the period 2026-2030.

**(11) Commitments and Contingencies**

**Merger-Related Litigation**

Counsel for TXNM has received a number of demand letters from certain law firms on behalf of individuals who are purported TXNM shareholders, accompanied by draft complaints naming TXNM and its directors as defendants and alleging that TXNM's preliminary proxy statement with respect to the Merger omitted or misrepresented certain material information. Such draft complaints include a request for injunctive relief with respect to the TXNM shareholder vote to approve, and the closing of, the Merger, as well as other remedies, including counsel fees. In August 2025, reported shareholders filed complaints in New York state court alleging disclosure violations and seeking injunctive relief. TXNM believes that the allegations set forth in the demand letters, draft complaints, and complaints are without merit and will defend against such actions vigorously.

***Overview***

There are various claims and lawsuits pending against the Company. In addition, the Company is subject to federal, state, and local environmental laws and regulations and periodically participates in the investigation and remediation of various sites. In addition, the Company periodically enters into financial commitments in connection with its business operations. Also, the Company is involved in various legal and regulatory proceedings in the normal course of its business. See Note 12. It

Table of Contents

**TXNM ENERGY, INC. AND SUBSIDIARIES**
**PUBLIC SERVICE COMPANY OF NEW MEXICO AND SUBSIDIARIES**
**TEXAS-NEW MEXICO POWER COMPANY AND SUBSIDIARIES**

**NOTES TO CONDENSED CONSOLIDATED FINANCIAL STATEMENTS**
(Unaudited)

is not possible at this time for the Company to determine fully the effect of all litigation and other legal and regulatory proceedings on its financial position, results of operations, or cash flows.

With respect to some of the items listed below, the Company has determined that a loss is not probable or that, to the extent probable, cannot be reasonably estimated. In some cases, the Company is not able to predict with any degree of certainty the range of possible loss that could be incurred. The Company assesses legal and regulatory matters based on current information and makes judgments concerning their potential outcome, giving due consideration to the nature of the claim, the amount and nature of any damages sought, and the probability of success. Such judgments are made with the understanding that the outcome of any litigation, investigation, or other legal proceeding is inherently uncertain. The Company records liabilities for matters where it is probable a loss has been incurred, and the amount of loss is reasonably estimatable. The actual outcomes of the items listed below could ultimately differ from the judgments made and the differences could be material. The Company cannot make any assurances that the amount of reserves or potential insurance coverage will be sufficient to cover the cash obligations that might be incurred as a result of litigation or regulatory proceedings. Except as otherwise disclosed, the Company does not expect that any known lawsuits, environmental costs, or commitments will have a material effect on its financial condition, results of operations, or cash flows.

Additional information concerning commitments and contingencies is contained in Note 16 of the Notes to Consolidated Financial Statements in the 2025 Annual Reports on Form 10-K.

***Commitments and Contingencies Related to the Environment***

**Nuclear Spent Fuel and Waste Disposal**

Nuclear power plant operators are required to enter into spent fuel disposal contracts with the DOE that require the DOE to accept and dispose of all spent nuclear fuel and other high-level radioactive wastes generated by domestic power reactors. Although the Nuclear Waste Policy Act required the DOE to develop a permanent repository for the storage and disposal of spent nuclear fuel by 1998, the DOE announced that it would not be able to open the repository by 1998 and sought to excuse its performance of these requirements. In November 1997, the DC Circuit issued a decision preventing the DOE from excusing its own delay but refused to order the DOE to begin accepting spent nuclear fuel. Based on this decision and the DOE's delay, a number of utilities, including APS (on behalf of itself and the other PVNGS owners, including PNM), filed damages actions against the DOE in the Court of Federal Claims. The lawsuits filed by APS alleged that damages were incurred due to DOE's continuing failure to remove spent nuclear fuel and high-level waste from PVNGS. APS and the DOE entered into a settlement agreement, subsequently extended, that established a process for the payment of claims for costs incurred through December 31, 2025. Under the settlement agreement, APS must submit claims annually for payment of allowable costs. APS is currently in the process of extending the settlement to cover costs paid through December 31, 2028. PNM records estimated claims on a quarterly basis. The benefit from the claims is passed through to customers under the FPPAC.

PNM estimates that it will incur approximately $55.6 million (in 2023 dollars) for its share of the costs related to the on-site interim storage of spent nuclear fuel at PVNGS for the remaining term of the operating licenses. PNM accrues these costs as a component of fuel expense as the nuclear fuel is consumed. At June 30, 2026 and December 31, 2025, PNM had a liability for interim storage costs of $16.4 million and $15.5 million, which is included in other deferred credits.

PVNGS has sufficient capacity at its on-site Independent Spent Fuel Storage Installation ("ISFSI") to store all of the nuclear fuel that will be irradiated during the initial operating license period, which ends in December 2027. Additionally, PVNGS has sufficient capacity at its on-site ISFSI to store a portion of the fuel that will be irradiated during the period of extended operation, which ends in November 2047. If uncertainties regarding the U.S. Government's obligation to accept and store spent fuel are not favorably resolved, APS will evaluate alternative storage solutions that may obviate the need to expand the ISFSI to accommodate all of the fuel that will be irradiated during the period of extended operation.

**The New Mexico Energy Transition Act**

The New Mexico Energy Transition Act ("ETA") sets a statewide standard that requires investor-owned electric utilities to have specified percentages of their electric-generating portfolios be from renewable and zero-carbon generating resources. The passage of the ETA amended the REA to require utilities operating in New Mexico to have renewable portfolios equal to 50% by 2030, 80% by 2040, and 100% zero-carbon energy by 2045. The amendments also allow for the recovery of undepreciated investments and decommissioning costs related to qualifying EGUs that the NMPRC has required be removed

Table of Contents

**TXNM ENERGY, INC. AND SUBSIDIARIES**
**PUBLIC SERVICE COMPANY OF NEW MEXICO AND SUBSIDIARIES**
**TEXAS-NEW MEXICO POWER COMPANY AND SUBSIDIARIES**

**NOTES TO CONDENSED CONSOLIDATED FINANCIAL STATEMENTS**
(Unaudited)

from retail jurisdictional rates, provided replacement resources to be included in retail rates have lower or zero-carbon emissions. The ETA requires the NMPRC to review and approve utilities' annual renewable portfolio plans to ensure compliance with the RPS. Also pursuant to the ETA, the NM Environmental Improvement Board adopted standards of performance that limit $CO_2$ emissions to no more than 1,100 lbs. per MWh beginning January 1, 2023, for new and existing coal-fired EGUs with original installed capacities exceeding 300 MW.

The ETA provides for a transition from fossil-fuel generation resources to renewable and other carbon-free resources through certain provisions relating to the abandonment of coal-fired generating facilities. These provisions include the use of energy transition bonds to finance certain costs of abandoning coal-fired facilities that are retired prior to January 1, 2023, for facilities operated by a "qualifying utility," or prior to January 1, 2032, for facilities that are not operated by a qualifying utility. The amount of energy transition bonds that can be issued to recover abandonment costs is limited to the lesser of $375.0 million or 150% of the undepreciated investment of the facility as of the abandonment date. Proceeds provided by energy transition bonds must be used only for purposes related to providing utility service to customers and to pay energy transition costs (as defined by the ETA). These costs may include plant decommissioning and coal mine reclamation costs provided those costs have not previously been recovered from customers or disallowed by the NMPRC or by a court order. Proceeds from energy transition bonds may also be used to fund severances for employees of the retired facility and related coal mine and to promote economic development, education and job training in areas impacted by the retirement of the coal-fired facilities. Energy transition bonds must be issued under a NMPRC-approved financing order, are secured by "energy transition property," are non-recourse to the issuing utility, and are repaid by a non-bypassable charge paid by all customers of the issuing utility. These customer charges are subject to an adjustment mechanism designed to provide for timely and complete payment of principal and interest due under the energy transition bonds.

The ETA also provides that utilities must obtain NMPRC approval of competitively procured replacement resources that shall be evaluated based on their cost, economic development opportunity, ability to provide jobs with comparable pay and benefits to those lost upon retirement of the facility, and that do not exceed emissions thresholds specified in the ETA. In determining whether to approve replacement resources, the NMPRC must give preference to resources with the least environmental impacts, those with higher ratios of capital costs to fuel costs, and those located in the school district of the abandoned facility. The ETA also provides for the procurement of energy storage facilities and gives utilities discretion to maintain, control, and operate these systems to ensure reliable and efficient service.

The ETA has had and will have a significant impact on PNM's future generation portfolio, including PNM's retirement of SJGS in 2022. PNM cannot predict the full impact of the ETA with respect to Four Corners or the outcome of its future generating resource abandonment and replacement resource filings with the NMPRC.

**The Clean Air Act**

*Regional Haze*

Pursuant to the CAA, states are required to establish goals for improving visibility in national parks and wilderness areas (also known as Class I areas) and to develop long-term strategies for reducing emissions of air pollutants that cause visibility impairment in their own states and for preventing degradation in other states. States must establish a series of interim goals to ensure continued progress by adopting a new SIP every ten years. In the first SIP planning period, states were required to conduct Best Available Retrofit Technology determinations for certain covered facilities, including utility boilers, built between 1962 and 1977 that have the potential to emit more than 250 tons per year of visibility impairing pollution. For all future SIP planning periods, states must evaluate whether additional emissions reduction measures may be needed to continue making reasonable progress toward natural visibility conditions.

SIPs for the second planning period were due in July 2021, which deadline NMED was unable to meet. During NMED's preparation of the SIP for the second compliance period, PNM was notified that a regional haze four-factor analysis for SJGS was not required since PNM retired its share of SJGS in 2022. On August 30, 2022, EPA published in the Federal Register an official "Finding of Failure to Submit" for states, including New Mexico, that have not yet submitted a round 2 regional haze SIP. This action by EPA started a two-year clock for it to issue a FIP which deadline has now passed. NMED petitioned the NM Environmental Improvement Board to adopt a proposed SIP and submitted a final revised plan to the NM Environmental Improvement Board on March 3, 2025. PNM submitted comments on the proposed SIP in response to a request for comments by NMED. The NM Environmental Improvement Board held a public hearing from April 28 to April 30, 2025. On December 8, 2025, the NM Environmental Improvement Board adopted the proposed SIP and final rule. No PNM generating stations were identified as reasonable progress units under the adopted SIP indicating that no additional emissions

Table of Contents



reductions measures may be necessary at this time. On March 11, 2026, the NMED submitted a SIP revision for the second planning period requesting approval by EPA.

On March 12, 2025, as part of EPA's list of 31 deregulatory actions, EPA announced it would restructure the Regional Haze Program. On October 2, 2025, EPA published an advanced notice of proposed rulemaking to solicit information from the public to help develop regulatory changes on the implementation and structure of the Regional Haze Rule ("RHR"). The advanced notice itself does not impose any requirements but requests input on how EPA can revise the RHR to streamline regulatory requirements impacting states' visibility improvement obligations. Comments were due December 1, 2025.

*Carbon Dioxide Emissions*

In 2015, EPA established standards to limit $CO_2$ emissions from power plants, including (1) Carbon Pollution Standards for new, modified, and reconstructed power plants; and (2) the Clean Power Plan for existing power plants. Challengers successfully petitioned the U.S. Supreme Court for a stay of the Clean Power Plan. In 2019, EPA repealed the Clean Power Plan, promulgated the ACE Rule, and revised the implementing regulations for all emission guidelines. The ACE Rule was also challenged, and on January 19, 2021, the DC Circuit issued an opinion in American Lung Association and American Public Health Association v. EPA, et al., vacating the ACE Rule.

Numerous parties sought review by the U.S. Supreme Court, and on June 30, 2022, the U.S. Supreme Court held that the "generation shifting" approach in the Clean Power Plan exceeded the powers granted to EPA by Congress. Of broader significance in administrative law, the Court's opinion expressly invoked the "major question" doctrine, which requires rules involving issues of "vast economic or political significance" to be supported by clear statutory authorization. In cases where there is no clear statement of authority, courts need not defer to the agency's statutory interpretation on "major questions." The decision sets legal precedent for future rulemakings by EPA and other federal regulatory agencies whereby the agencies' authority may be limited based upon similar reasoning.

The litigation over the Carbon Pollution Standards remains held in abeyance but could be reactivated by the parties upon a determination by the court that reconsideration of the rule has concluded.

In 2024, EPA adopted regulatory actions under CAA Sections 111(b) and (d) to replace the Clean Power Plan and the ACE Rule. The final rules include revised new source performance standards under Section 111(b) for all new natural gas-fired combustion turbines and emission guidelines under Section 111(d) requiring states to develop standards of performance for GHG emissions from existing fossil-fuel-fired electric steam generating units. In the final rules, EPA determined that the standards for existing coal- or gas-fired steam generating units must be based on the use of either CCS (long-term), natural gas co-firing (medium-term), or exempt from the rule via early retirement. The standards for new combustion turbines must be based on CCS (base load), efficient simple cycle design (intermediate load), or lower-emitting fuels (low load). Over a dozen states, several industry groups and some power companies and labor unions filed challenges to the rule at the DC Circuit, which heard oral arguments on December 6, 2024. However, President Trump issued several executive orders on January 20, 2025, directing his Administration to review all agency actions and suspend, revise, or rescind those identified as imposing an undue burden on domestic energy resources. On March 12, 2025, as part of EPA's reconsideration of 31 environmental regulations, EPA announced the agency will reconsider the previous Administration's regulations on GHG standards and guidelines for power plants. On June 17, 2025, EPA published a proposed rule in the Federal Register with two alternatives to repeal or revise the GHG emission standards for EGUs. EPA primarily proposes to find that GHG emissions from fossil fuel-fired power plants "do not contribute significantly to dangerous air pollution" under the meaning of CAA Section 111, which would preclude EPA from regulating GHG emissions from those plants. As a result, EPA is proposing to repeal all GHG standards for the power sector promulgated under CAA Section 111 in both 2015 and 2024. EPA also proposed, in the alternative, to find that CCS is not adequately demonstrated and that neither CCS nor gas co-firing are the best system of emission reduction for GHG emissions from power plants, which findings also support repeal of those specific requirements from the rules adopted in 2024. Comments were due by September 15, 2025, and EPA had indicated it intended to finalize the proposed rule in 2026.

Because the CAA 111 rule does not contain provisions for existing natural gas units, on March 26, 2024, EPA announced it was opening a non-regulatory docket and issued framing questions to gather input about ways to design a stronger, more durable approach to GHG regulation of existing gas combustion turbines. The docket was open for public comment from March 26, 2024 to May 28, 2024, and the agency held a policy forum to bring stakeholders together to share ideas with EPA and others. Under the Trump Administration, EPA is unlikely to propose a rule based on this non-regulatory docket.

Table of Contents

**TXNM ENERGY, INC. AND SUBSIDIARIES**
**PUBLIC SERVICE COMPANY OF NEW MEXICO AND SUBSIDIARIES**
**TEXAS-NEW MEXICO POWER COMPANY AND SUBSIDIARIES**

**NOTES TO CONDENSED CONSOLIDATED FINANCIAL STATEMENTS**
(Unaudited)

In 2021, President Biden signed an extensive executive order aimed at addressing climate change concerns domestically and internationally. The order was intended to build on the initial climate-related actions the Biden Administration took on January 20, 2021. It addressed a wide range of issues, including establishing climate change concerns as an essential element of U.S. foreign and security policy, identifying a process to determine the U.S. INDC under the Paris Agreement, and establishing a Special Presidential Envoy for Climate that would sit on the National Security Council. On April 22, 2021, at the Earth Day Summit, as part of the U.S.'s re-entry into the Paris Agreement, President Biden unveiled the goal to cut U.S. emissions by 50% - 52% from 2005 levels by 2030, nearly double the GHG emissions reduction target set by the Obama Administration. The 2030 goal joined President Biden's other climate goals which included a carbon pollution-free power sector by 2035 and a net-zero emissions economy by no later than 2050. In an executive order issued on January 20, 2025, President Trump ordered his Administration to withdraw the U.S. from the Paris Agreement and from any agreement, pact, accord, or similar commitment made under the United Nations Framework Convention on Climate Change.

On August 1, 2025, EPA published a proposal to rescind the 2009 final rule commonly known as the Endangerment Finding. In the Endangerment Finding, EPA found that current and projected atmospheric concentrations of the well-mixed combination of six GHGs threaten public health and welfare, and that the combined emissions of these GHGs from new motor vehicles and engines contribute to the GHG pollution that threatens public health and welfare. On February 12, 2026, the rule was finalized as proposed, repealing all GHG emission standards for certain vehicles and engines promulgated on the basis of the Endangerment Finding. While the Endangerment Finding did not directly impose any requirements on EGUs, EPA cited the Endangerment Finding as a basis for its authority to regulate GHG emissions from EGUs under CAA Section 111.

PNM's review of the GHG emission reductions standards that have or may occur as a result of legislation or regulation is ongoing. We are currently determining what impact, if any, the final rules will have on our business, results of operations, and financial condition.

*National Ambient Air Quality Standards ("NAAQS")*

The CAA requires EPA to set NAAQS for pollutants reasonably anticipated to endanger public health or welfare. EPA has set NAAQS for certain pollutants, including NOx, $SO_2$, ozone, and particulate matter.

*NOx Standard* – In 2018, EPA published the final rule to retain the current primary health-based NOx standards of which $NO_2$ is the constituent of greatest concern and is the indicator for the primary NAAQS. EPA concluded that the current 1-hour and annual primary $NO_2$ standards are requisite to protect public health with an adequate margin of safety. The rule became effective on May 18, 2018. The State of New Mexico has attained the current NOx NAAQS standards.

*$SO_2$ Standard* – In 2019, EPA announced its final decision to retain, without changes, the primary health-based NAAQS for $SO_2$. Specifically, EPA retained the current 1-hour standard for $SO_2$, which is 75 parts per billion, based on the 3-year average of the 99th percentile of daily maximum 1-hour $SO_2$ concentrations. In 2021, EPA published in the Federal Register the initial air quality designations for all remaining areas not yet designated under the 2010 $SO_2$ Primary NAAQS. All areas of New Mexico have been designated attainment/unclassifiable through four rounds of designations by EPA.

*Ozone Standard* – In 2015, EPA finalized the new ozone NAAQS and lowered both the primary and secondary 8-hour standard from 75 to 70 parts per billion. With ozone standards becoming more stringent, fossil-fueled generation units will come under increasing pressure to reduce emissions of NOx and volatile organic compounds since these are the pollutants that form ground-level ozone. During 2017 and 2018, EPA released rules establishing area designations for ozone. In those rules, San Juan County, New Mexico, where Four Corners is located, is designated as attainment/unclassifiable and only a small area in Doña Ana County, New Mexico is designated as marginal non-attainment. Although Afton Generating Station is located in Doña Ana County, it is not located within the small area designated as non-attainment for the 2015 ozone standard.

PNM does not believe there will be material impacts to its facilities because of the non-attainment designation of the small area within Doña Ana County. Until EPA approves attainment designations for the Navajo Nation and releases a proposal to implement the revised ozone NAAQS, PNM is unable to predict what impact the adoption of these standards may have on Four Corners. On July 13, 2020, EPA proposed to retain the existing ozone NAAQS based on a review of the full body of currently available scientific evidence and exposure/risk information, but on August 21, 2023, EPA announced an entirely new review of the ozone standard. PNM cannot predict the outcome of this matter.

In 2019, EPA issued findings that several states, including New Mexico, had failed to submit interstate transport SIPs for the 2015 8-hour ozone NAAQS, triggering an obligation for EPA to issue a FIP within two years. In response, NMED

Table of Contents



submitted a Good Neighbor SIP on July 27, 2021, that demonstrates that there are no significant contributions from New Mexico to downwind problems in meeting the federal ozone standard. On March 15, 2023, EPA Administrator Regan signed a final action imposing a FIP on multiple states but did not include a FIP for New Mexico because the most updated modeling available at the time of the proposal confirmed the state did not contribute to downwind ozone nonattainment or maintenance areas. However, the updated modeling EPA used in the final rule indicated that New Mexico may be significantly contributing to one or more non-attainment or maintenance areas. In light of that modeling result, on February 16, 2024, the EPA published a proposed rule partially disapproving the SIPs for New Mexico and four other states (Arizona, Iowa, Kansas, and Tennessee) and expanding the Good Neighbor FIP to apply to these states. The FIP aspect of the proposed rule would have required fossil fuel-fired power plants in these five states to participate in an allowance-based ozone season NOx emissions trading program beginning in 2025, but the outgoing Biden Administration did not finalize the rule. On March 10, 2025, in the DC Circuit, the EPA filed a motion for voluntary remand of its ozone interstate transport FIP for the 2015 ozone NAAQS to reconsider the rule and had anticipated completing a new rulemaking by Fall 2026. In addition, EPA has now reconsidered the policies underlying its Good Neighbor rule, and, on January 30, 2026, EPA issued a proposed rule to approve New Mexico's SIP submission because it will not contribute significantly to nonattainment or interfere with maintenance of the 2015 8-hour ozone NAAQS in any other state. If finalized, the EPA will withdraw the prior proposed partial SIP disapproval.

*PM Standard* – In 2023, EPA published, in the Federal Register, a proposal to lower the annual fine PM standard to between 9-10 µg/m3 but retain the rest of its PM standards, including the current daily fine PM standard, the daily coarse PM standard, and the secondary PM standards. The final rule was published on March 6, 2024, lowering the primary annual PM 2.5 NAAQS to 9 ug/m3, and became effective May 6, 2024. States will have until March 2032 to attain compliance with the new standard for any areas designated as nonattainment. This implementation process also applies to the Albuquerque-Bernalillo County Environmental Health Department who may combine efforts with NMED. However, even before any designations are made, the new standard is effective for conducting required modeling for permit applications and revisions. The lower standard is expected to result in new nonattainment areas throughout the country and could prompt additional PM control requirements, but PNM cannot predict the impacts of the outcome of future rulemaking. The PM standard was challenged in the D.C. Circuit, and, following the change in administration, EPA filed a motion for voluntary vacatur of the rule, but the court denied that motion and upheld the new standard on June 26, 2026. The Northern District of California has ordered EPA to promulgate final designations for all areas of the country no later than February 6, 2027.

**Cooling Water Intake Structures**

In 2014, EPA issued a rule establishing national standards for certain cooling water intake structures at existing power plants and other facilities under the Clean Water Act to protect fish and other aquatic organisms by minimizing impingement mortality (the capture of aquatic wildlife on intake structures or against screens) and entrainment mortality (the capture of fish or shellfish in water flow entering and passing through intake structures).

To minimize impingement mortality, the rule provides operators of facilities, such as Four Corners, seven options for meeting Best Technology Available ("BTA") standards for reducing impingement. The permitting authority must establish the BTA for entrainment on a site-specific basis, taking into consideration an array of factors, including endangered species and social costs and benefits. Affected sources must submit source water baseline characterization data to the permitting authority to assist in the BTA determination. Compliance deadlines under the rule are tied to permit renewals, including any subject to a schedule of compliance established by the permitting authority in the permit itself.

In 2018, several environmental groups sued EPA Region IX in the U.S. Court of Appeals for the Ninth Circuit over EPA's failure to timely reissue the Four Corners NPDES permit. The petitioners asked the court to issue a *writ of mandamus* compelling EPA Region IX to take final action on the pending NPDES permit by a reasonable date. EPA subsequently reissued the NPDES permit. The permit did not contain conditions related to the cooling water intake structure rule, because EPA determined that the facility had achieved BTA for both impingement and entrainment by operating a closed-cycle recirculation system. Several environmental groups filed a petition for review with EPA's Environmental Appeals Board ("EAB") concerning the reissued permit. The environmental groups alleged that the permit was reissued in contravention of the Clean Water Act and did not contain limits or conditions required by EPA's ELG applicable to Four Corners or EPA's cooling water intake structures rule, among others. EPA withdrew the Four Corners NPDES permit in order to examine the issues raised by the environmental groups and then issued an updated NPDES permit in 2019. The permit was once again appealed to the EAB and was stayed before the effective date, but the EAB issued an order denying the petition for review on September 30, 2020. Thereafter, the Regional Administrator of the EPA signed a notice of final permit decision, and the NPDES permit was issued on November 9, 2020. The permit became effective December 1, 2020. On January 22, 2021, the environmental groups filed a petition for review of the EAB's decision with the U.S. Court of Appeals for the Ninth Circuit. The September 2019 permit

Table of Contents



remained in effect pending the outcome of this appeal. On March 21, 2022, EPA provided notice in the Federal Register of a proposed settlement agreement with the environmental groups. The parties subsequently executed the settlement agreement as of May 2, 2022. Under the settlement, the lawsuit was administratively closed through September 6, 2023, during which time a third-party consultant spent 12 months sampling discharges from Four Corners and EPA spent three months completing an analysis. On December 1, 2023, EPA issued a modification, effective December 31, 2023, to the NPDES permit that had been issued on November 9, 2020. The modification applies to permit elements related to effluent discharge. PNM cannot predict whether the analysis required to be performed by EPA under the settlement agreement will result in further changes to the NPDES permit but does not anticipate that it will have a material impact on PNM's financial position, results of operations, or cash flows.

**Effluent Limitation Guidelines**

In 2013, EPA published proposed revised wastewater ELG establishing technology-based wastewater discharge limitations for fossil fuel-fired electric power plants. EPA signed the final Steam Electric ELG rule in 2015. The final rule, which became effective on January 4, 2016, phased in the new, more stringent requirements in the form of effluent limits for arsenic, mercury, selenium, and nitrogen for wastewater discharged from wet scrubber systems and zero discharge of pollutants in ash transport water that must be incorporated into plants' NPDES permits. The 2015 rule required each plant to comply between 2018 and 2023 depending on when it needed a new or revised NPDES permit.

The Steam Electric ELG rule was challenged in the U.S. Court of Appeals for the Fifth Circuit by numerous parties. In 2017, EPA signed a notice indicating its intent to reconsider portions of the rule, and the Fifth Circuit issued an order severing the issues under reconsideration and holding the case in abeyance as to those issues. However, the court allowed challenges to other portions of the rule to proceed. In 2019, the Fifth Circuit granted those challenges and issued an opinion vacating several portions of the rule, specifically those related to legacy wastewater and leachate, for which the court deemed the standards selected by EPA to be arbitrary and capricious.

In 2017, EPA published a final rule for postponement of certain compliance dates. The rule postponed the earliest date on which compliance with the ELG for regulated waste streams would be required from November 1, 2018 until November 1, 2020. In 2019, EPA published a proposed rule revising the original ELG while maintaining the compliance dates. In 2020, EPA published in the Federal Register the final Steam Electric ELG and Standards for the Steam Electric Power Generating Point Source Category, revising the final 2015 guidelines for both flue gas desulfurization wastewater and bottom ash transport water. The 2020 rule required compliance with new limits as soon as possible on or after October 13, 2021, but no later than December 31, 2025.

In 2021, EPA published notice that it would undertake a supplemental rulemaking to revise the ELG after completing its review of the rules reconsidered in 2020. As part of this process, EPA committed to determine whether more stringent limitations and standards would be appropriate. On March 29, 2023, EPA published the proposed ELG Rule in the Federal Register. The proposed rule included stricter limitations for wastewater discharges for coal-fired facilities but allowed for flexibilities for those coal-powered facilities that would decommission or repower by December 31, 2028, to December 31, 2032.

On May 9, 2024, EPA published a final rule to further revise the ELG. This final supplemental rule updated the technology-based limitations applicable to flue gas desulfurization wastewater, bottom ash transport water, and legacy wastewater at existing sources, as well as combustion residual leachate at new and existing sources. The 2024 rule was challenged in the U.S. Court of Appeals for the Eighth Circuit, but the court denied motions for a stay, so the rule remains in effect. On March 12, 2025, EPA announced it would reconsider the ELGs for the steam electric power generating industry. On October 2, 2025, EPA published proposed and direct final rules for extension of deadlines and other provisions. Comments were due November 3, 2025. On November 28, 2025, EPA withdrew the direct final rule due to adverse comments and on December 31, 2025, published a final rule revising various deadlines and other provisions in the 2024 rule. On March 9, 2026, EPA sent a proposed rule to Office of Management and Budget reconsidering the technology-based effluent limitations and standards promulgated in 2024. On May 18, 2026, EPA published its proposed rule revising ELGs for unmanaged combustion residual leachate. Comments were due June 17, 2026. The final rule is expected to be published in March 2027.

Reeves Station discharges cooling tower blowdown to a publicly owned treatment plant and no longer holds an NPDES permit; therefore, it is expected that no ELG requirements will be imposed.

Table of Contents

**TXNM ENERGY, INC. AND SUBSIDIARIES**
**PUBLIC SERVICE COMPANY OF NEW MEXICO AND SUBSIDIARIES**
**TEXAS-NEW MEXICO POWER COMPANY AND SUBSIDIARIES**

**NOTES TO CONDENSED CONSOLIDATED FINANCIAL STATEMENTS**
(Unaudited)

See "Cooling Water Intake Structures" above for additional discussion of Four Corners' current NPDES permit. Four Corners may be required to change equipment and operating practices affecting boilers and ash handling systems, as well as change its waste disposal techniques during the next NPDES permit renewal. PNM is unable to predict the outcome of these matters or a range of the potential costs of compliance.

**Santa Fe Generating Station**

PNM and NMED are parties to agreements under which PNM has installed a remediation system to treat water from a City of Santa Fe municipal supply well and an extraction well to address gasoline contamination in the groundwater at the site of PNM's former Santa Fe Generating Station and service center. A 2008 NMED site inspection report states that neither the source nor extent of contamination at the site has been determined and that the source may not be the former Santa Fe Generating Station. During 2013 and 2014, PNM and NMED collected additional samples that showed elevated concentrations of nitrate and volatile organic compounds in some of the monitoring wells at the site. In addition, one monitoring well contained free-phase hydrocarbon products. PNM collected a sample of the product for "fingerprint" analysis. The results of this analysis indicated the product was a mixture of older and newer fuels. The presence of newer fuels in the sample suggests the hydrocarbon product likely originated from off-site sources. In 2015, PNM and NMED entered into a memorandum of understanding to address changing groundwater conditions at the site under which PNM agreed to continue hydrocarbon investigation under the supervision of NMED. Qualified costs are eligible for payment through the New Mexico Corrective Action Fund ("CAF"), which is administered by the NMED Petroleum Storage Tank Bureau. In 2019, PNM received notice from NMED that an abatement plan for the site is required to address concentrations of previously identified compounds, unrelated to those discussed above, found in the groundwater. NMED approved PNM's abatement plan proposal, which covers field work and reporting.

Additional monitoring well installations along with periodic groundwater sampling and reporting under NMED-approved CAF and abatement plan requirements have continued and support PNM's contention that off-site sources have impacted, and are continuing to impact, the local groundwater in the vicinity of the former Santa Fe Generating Station.

The City of Santa Fe has stopped operating its well at the site, which is needed for PNM's groundwater remediation system to operate. As a result, PNM has stopped performing remediation activities at the site. However, PNM's monitoring and other abatement activities at the site are ongoing and will continue until the groundwater meets applicable federal and state standards or until NMED determines that remediation is not required, whichever is earlier. PNM is also in communications with the City of Santa Fe to determine when operations at the site might resume. PNM is not able to assess the duration of this project or estimate the impact on its obligations if PNM is required to resume groundwater remediation activities at the site. PNM is unable to predict the outcome of these matters.

**Coal Combustion Residuals Waste Disposal**

CCRs consisting of fly ash, bottom ash, and gypsum generated from coal combustion and emission control equipment at SJGS have been disposed of in the surface mine pits adjacent to the plant. SJGS does not operate any onsite CCR impoundments or landfills. The NMMMD currently regulates mine reclamation activities at the San Juan mine, including placement of CCRs in the surface mine pits, with federal oversight by the OSM. APS disposes of CCRs in onsite ponds and dry storage areas at Four Corners. Ash management at Four Corners is regulated by EPA and the New Mexico State Engineer's Office.

EPA's 2015 coal ash rule included a non-hazardous waste determination for coal ash and sets minimum criteria for existing and new CCR landfills and surface impoundments. In 2016, the Water Infrastructure Improvements for the Nation Act (the "WIIN Act") was signed into law to address critical water infrastructure needs in the U.S. and contained a number of provisions related to CCRs. Among other things, the WIIN Act allowed, but did not require, states to develop and submit CCR permit programs for EPA approval, provided flexibility for states to incorporate EPA's 2015 rule for CCRs or develop other criteria that are at least as protective as EPA's rule, and required EPA to approve state permit programs within 180 days of submission by the state. Because states are not required to implement their own CCR permit programs, EPA was required to develop a federal permit program in states that chose not to implement a program, subject to congressional funding. Until state or federal permit programs are in effect, the 2015 rule continues to be self-implementing in nature, subject to enforcement by EPA or citizen groups. For facilities located within the boundaries of Native American reservations, such as the Navajo Nation where Four Corners is located, EPA is required to develop a federal permit program regardless of appropriated funds.

In 2018, EPA published a rule that constitutes "Phase One, Part One" of its ongoing reconsideration and revision of the 2015 CCR rule. The final Phase One, Part One rule extended the deadline to allow EGUs with unlined impoundments or that

Table of Contents

**TXNM ENERGY, INC. AND SUBSIDIARIES**
**PUBLIC SERVICE COMPANY OF NEW MEXICO AND SUBSIDIARIES**
**TEXAS-NEW MEXICO POWER COMPANY AND SUBSIDIARIES**

**NOTES TO CONDENSED CONSOLIDATED FINANCIAL STATEMENTS**
(Unaudited)

fail to meet the uppermost aquifer requirement to continue to receive coal ash until October 31, 2020, which was again extended by subsequent amendments. The rule also authorized a "Participating State Director" or EPA to approve suspension of groundwater monitoring requirements and to issue certifications related to the location restrictions, design criteria, groundwater monitoring, remedy selection and implementation. The rule also modified groundwater protection standards for certain constituents, which include cobalt, molybdenum, lithium, and lead without a maximum contamination level.

In 2019, EPA published a second round of proposed revisions, which are commonly referred to as the "Phase Two" revisions, to address reporting and accessibility to public information, "CCR piles" and "beneficial use" definitions, and the requirements for management of CCR piles. EPA reopened and extended the Phase Two comment period several times. To date, EPA has not yet finalized provisions in Phase Two related to beneficial use of CCR and CCR piles.

Since its Phase Two proposal, EPA has finalized three other rules addressing various CCR rule provisions. In 2020, EPA promulgated its proposed Holistic Approach to Closure Part A ("Part A"), which set forth a new deadline of April 11, 2021, for companies to initiate closure of unlined CCR impoundments. In accordance with the DC Circuit's vacatur of portions of the 2015 CCR Rule, Part A also changed the classification of compacted soil-lined or clay-lined surface impoundments from "lined" to "unlined", triggering closure or retrofit requirements for those impoundments. In addition, Part A delineated a process for owners/operators to submit requests for alternative closure deadlines.

EPA also issued the Holistic Approach to Closure Part B ("Part B") in 2020, which delineated the process for owners/operators to submit alternate liner demonstrations for clay-lined surface impoundments that could otherwise meet applicable requirements. This rule did not include beneficial use of CCR for closure, which EPA explained would be addressed in subsequent rulemaking actions. On May 18, 2023, EPA published a proposed rule establishing the regulatory requirements for inactive surface impoundments at inactive facilities and a new category of regulated unit called a CCR management unit ("CCRMU"), including groundwater monitoring, corrective action, closure, and post-closure care requirements for all CCR management units (regardless of how or when that CCR was placed), and several technical corrections to the existing regulations. Comments on the proposed rule were due July 17, 2023.

On May 8, 2024, EPA published a final rule that extended federal CCR regulatory requirements to (1) inactive CCR surface impoundments at inactive utilities and (2) CCRMU, including CCR impoundments and landfills that closed prior to the effective date of the 2015 CCR rule, inactive CCR landfills, and other areas where CCR was managed directly on the land ("Legacy Rule"). The Legacy Rule became effective on November 8, 2024. EPA included deferral options for smaller CCRMU containing between one and 1,000 tons of CCR, CCRMU located beneath critical infrastructure or large buildings or structures vital to the continuation of current site activities, and CCRMU that closed prior to the effective date of the new rule (subject to certain eligibility conditions). EPA also codified the controversial definitions of infiltration and liquids that were litigated in the DC Circuit. Six petitions for review of the Legacy Rule were filed and were consolidated into one case by the DC Circuit. The Utility Solid Waste Activities Group, of which TXNM is a member, is a petitioner jointly with the National Rural Electric Cooperative Association, and American Public Power Association. The U.S. Supreme Court denied a requested stay of the rule by East Kentucky Power Cooperative. The DC Circuit agreed to hold the case in abeyance pending the outcome of EPA's reconsideration of the Legacy Rule, with status reports due on March 16, 2026, and at 90-day intervals thereafter. On July 22, 2025, EPA published a final rule and companion proposal revising the compliance deadlines for CCRMU requirements under the Legacy Rule. In September 2025, EPA withdrew the direct final rule due to adverse comments but subsequently issued a final extension rule on February 6, 2026, delaying the deadline to complete the "Facility Evaluation Report Part 1" until February 9, 2027, and extending all subsequent deadlines, as well. The final extension rule was published in the Federal Register on February 10, 2026. On April 13, 2026, EPA published proposed Legacy Rule/CCRMU Amendments that, among other things, would rescind all the requirements related to CCRMU and authorize site-specific tailoring of certain rule requirements through federal permits or approved state permits. The comment period for that proposal ended June 29, 2026.

As of the effective date of the Legacy Rule, one CCRMU was identified at SJGS. SJGS is required, at a minimum, to conduct a two-part evaluation of historic and current CCRMUs with reporting due dates of February 9, 2027, and February 8, 2028 (based on the new final extension rule), with each report posted to a company website by the due date.

At this time, PNM is still evaluating the financial impacts of this final regulation for Four Corners. Initial CCRMU site surveys and final site investigation reports are expected to be finalized by February 9, 2027. Based on the information available to the Company at this time, PNM cannot reasonably estimate the fair value of the entire CCRMU ARO. PNM cannot predict the outcome of the CCRMU site evaluations and investigations, or how these outcomes might affect the associated costs, which might have a material impact on PNM's operations, financial position, or cash flows.

Table of Contents

**TXNM ENERGY, INC. AND SUBSIDIARIES**
**PUBLIC SERVICE COMPANY OF NEW MEXICO AND SUBSIDIARIES**
**TEXAS-NEW MEXICO POWER COMPANY AND SUBSIDIARIES**

**NOTES TO CONDENSED CONSOLIDATED FINANCIAL STATEMENTS**
(Unaudited)

In 2020, EPA published a proposed rule establishing a federal permitting program for the handling of CCR within the boundaries of Native American reservations and in states without their own federally authorized state programs. Permits for units within the boundaries of Native American reservations would be due 18 months after the effective date of the rule. EPA has not yet finalized the federal permitting program rule. On May 8, 2026, EPA published a notice reopening the comment period on the proposed federal CCR permit program. Comments are due July 29, 2026. EPA has coordinated with the affected permits for the three facilities with CCR disposal units located on Native American lands. PNM cannot predict the outcome of EPA's rulemaking activity or the outcome of any related litigation, and whether or how such a ruling would affect operations at Four Corners. Separately, on July 13, 2026, EPA issued an advance notice of proposed rulemaking to solicit comments on a potential federal general permit option for CCR facilities. The comment period ends on October 13, 2026.

EPA's CCR rule does not cover mine placement of coal ash. In the preamble to its 2015 rule, EPA explained that the OSM and, as necessary, EPA would address the management of CCR in mine fills in a separate regulatory action, recognizing OSM's expertise in this area. EPA's decision to defer to OSM was based on a recommendation from the National Academy of Sciences ("NAS"), which was commissioned by Congress in 2006 to investigate the health, safety and environmental risks associated with the use of CCR for mine reclamation. The NRC report recommended that enforceable federal standards be established for the disposal of CCR in mine fills to ensure that states have specific authority and that states implement adequate safeguards. In 2007, OSM published an advance notice of proposed rulemaking on the placement of CCR at mine sites. In that notice, OSM explained its intent to develop the proposed regulations based on its existing authority under the Surface Mining Control and Reclamation Act. Since 2007, however, OSM has not taken any further action to advance this rulemaking. PNM cannot predict the outcome of OSM's proposed rulemaking regarding CCR regulation, including mine placement of CCRs, or whether OSM's actions will have a material impact on PNM's operations, financial position, or cash flows.

As noted above, SJGS did not operate any onsite CCR impoundments or landfills that are regulated under the 2015 CCR rule, and as of November 8, 2024, identified only one CCRMU that would potentially be regulated under the Legacy Rule. The CCR has since been removed from that unit and PNM will conduct the requisite site investigation reports. PNM would seek recovery from its retail customers of all CCR costs for jurisdictional assets that are ultimately incurred.

Utilities that own or operate CCR disposal units, such as those at Four Corners, as indicated above, were required to collect sufficient groundwater sampling data to initiate a detection monitoring program. Four Corners completed the analysis for its CCR disposal units, which identified several units that needed corrective action. Four Corners continues to gather additional groundwater data and perform remedial evaluations and activities. At this time, PNM does not anticipate its share of the cost to complete these corrective actions to close the CCR disposal units, or to gather and perform remedial evaluations on groundwater at Four Corners, will have a significant impact on its operations, financial position, or cash flows.

***Other Commitments and Contingencies***

**Coal Supply**

*Four Corners*

APS purchases all of Four Corners' coal requirements from NTEC, an entity owned by the Navajo Nation, under the Four Corners CSA that expires in 2031. The coal comes from reserves located within the Navajo Nation. The contract provides for pricing adjustments over its term based on economic indices and certain minimum payments that may be required if no deliveries of coal are taken. PNM's share of the coal costs is being recovered through the FPPAC. See additional discussion of the Four Corners CSA in Note 17 of the Notes to Consolidated Financial Statements in the 2025 Annual Reports on Form 10-K.

*Coal Mine Reclamation*

As indicated under Coal Combustion Residuals Waste Disposal above, SJGS disposed of CCRs in the surface mine pits adjacent to the plant and Four Corners disposes of CCRs in ponds and dry storage areas.

Under the terms of the SJGS CSA, PNM and the other SJGS owners are obligated to compensate WSJ LLC for all reclamation costs associated with the supply of coal from the San Juan mine. PNM and Westmoreland have entered into an agreement under which mine reclamation services for SJGS would be provided.

Table of Contents

**TXNM ENERGY, INC. AND SUBSIDIARIES**
**PUBLIC SERVICE COMPANY OF NEW MEXICO AND SUBSIDIARIES**
**TEXAS-NEW MEXICO POWER COMPANY AND SUBSIDIARIES**

**NOTES TO CONDENSED CONSOLIDATED FINANCIAL STATEMENTS**
(Unaudited)

A mine reclamation cost study was completed in the third quarter of 2025, and PNM and Westmoreland amended the mine reclamation services agreement to update the capital recovery charges due in each year from 2025 through 2028, which resulted in a minor increase in overall reclamation costs.

PNM's estimate of the costs necessary to reclaim the mine that serves SJGS is subject to many assumptions, including the timing of reclamation, generally accepted practices at the time reclamation activities occur, and current inflation and discount rates. PNM cannot predict the ultimate cost to reclaim the mine that serves SJGS and would seek to recover all costs related to reclaiming the underground mine from its customers but could be exposed to additional loss related to surface mine reclamation. In connection with certain mining permits relating to the operation of the San Juan mine, Westmoreland was required to post reclamation bonds of $118.7 million with the NMMMD. In order to facilitate the posting of reclamation bonds by sureties on behalf of Westmoreland, TXNM entered into the WFB LOC Facility under which letters of credit aggregating $19.3 million are outstanding as of June 30, 2026.

In 2025, APS provided an update to the cumulative MMBTU consumption for Four Corners for the purpose of allocating final mine reclamation costs. Based on the consumption outlook, PNM's forecasted share of final reclamation costs was reduced from 9.755% to 9.096%. As a result, PNM recorded a decrease in the liability related to the surface mine.

Based on the most recent estimates, PNM's remaining payments as of June 30, 2026, for mine reclamation, in future dollars, are estimated to be $21.6 million for the surface mines at both SJGS and Four Corners and $63.1 million for the underground mine at SJGS. At June 30, 2026 and December 31, 2025, liabilities, in current dollars, of $12.8 million and $20.8 million for surface mine reclamation and $56.3 million and $55.2 million for underground mine reclamation were recorded in other deferred credits.

The SJGS owners are parties to a reclamation trust funds agreement to provide financial assurance for post-term coal mine reclamation obligations. The trust funds agreement requires each owner to enter into an individual trust agreement with a financial institution as trustee, create an irrevocable reclamation trust, and meet year-end funding targets set by funding curves that are approved by the SJGS ownership. PNM began using its mine reclamation trust to pay for final mine reclamation costs in April 2023. Because the trust agreement requires meeting specific funding targets at year end, it may be necessary for PNM to make additional contributions to meet those targets. PNM contributed $7.0 million in 2025. Based on PNM's reclamation trust fund balance at June 30, 2026, current forecasts, and current funding curve targets, PNM anticipates contributing $2.0 million in 2026 and anticipates making contributions of $0.4 million in 2027 and $4.7 million in 2028.

Under the Four Corners CSA, PNM is required to fund its share of estimated final reclamation costs in annual installments into an irrevocable escrow account solely dedicated to the final reclamation cost of the surface mine at Four Corners. PNM did not make any contributions in 2025 and anticipates contributing $0.5 million per year for 2026, 2027 and 2028.

PNM recovers from retail customers' reclamation costs associated with the underground mine. However, the NMPRC capped the amount collected from retail customers for final reclamation of the surface mines at $100.0 million for both SJGS and Four Corners. If future estimates increase the liability for surface mine reclamation, the excess would be expensed at that time. The impacts of changes in New Mexico state law as a result of the enactment of the ETA and regulatory determinations made by the NMPRC may also affect PNM's financial position, results of operations, and cash flows. PNM is currently unable to determine the outcome of these matters.

**SJGS Decommissioning**

In 2021, the San Juan County Commission approved the Coal-Fired Electricity Generating Facility Demolition and Remediation Ordinance ("Ordinance 121"), requiring the full demolition of SJGS upon its complete and permanent closure. Ordinance 121 required the SJGS owners to submit a proposed demolition and remediation plan no later than three months after SJGS was retired. PNM and the other SJGS entered into the San Juan Decommissioning and Trust Funds Agreement, which requires PNM to fund its ownership share of final decommissioning costs into an irrevocable trust. Under the agreement, PNM is required to make funding contributions of which the amount and timing are subject to revised decommissioning cost studies and agreement among the SJGS owners. PNM began using its decommissioning trust to pay for demolition and decommissioning costs in October 2023. PNM has posted a surety bond in the amount of $46.0 million in connection with certain environmental decommissioning obligations and must maintain the bond or other financial assurance until those obligations are satisfied. The surety bond only represents a liability if the SJGS owners fail to deliver on its contractual liability.

Table of Contents

**TXNM ENERGY, INC. AND SUBSIDIARIES**
**PUBLIC SERVICE COMPANY OF NEW MEXICO AND SUBSIDIARIES**
**TEXAS-NEW MEXICO POWER COMPANY AND SUBSIDIARIES**

**NOTES TO CONDENSED CONSOLIDATED FINANCIAL STATEMENTS**
(Unaudited)

PNM records its share of the SJGS decommissioning obligation as an ARO on its Condensed Consolidated Balance Sheets. Studies on the decommissioning costs of SJGS are performed periodically and revisions to the ARO liability are recorded.

On July 29, 2025, PNM received a letter from the NMED indicating that the NMED designated PNM as a responsible party and requiring a Stage 1 Abatement Plan ("S1AP") proposal for SJGS for groundwater and soil contamination associated with former operations at SJGS. On November 26, 2025, PNM submitted the S1AP to NMED that was approved on February 9, 2026. The S1AP estimates site investigation and monitoring to be completed by the first quarter of 2027. PNM is currently conducting site investigations, groundwater sampling, and monitoring detailed in the S1AP.

**PVNGS Liability and Insurance Matters**

Public liability for incidents at nuclear power plants is governed by the Price-Anderson Nuclear Industries Indemnity Act, which limits the liability of nuclear reactor owners to the amount of insurance available from both commercial sources and an industry-wide retrospective payment plan. The insurance limit is subject to an adjustment every five years based upon the aggregate percentage change in the Consumer Price Index. The most recent adjustment took effect on January 1, 2024. As of that date, in accordance with this act, the PVNGS participants are insured against public liability exposure for a nuclear incident up to $16.3 billion per occurrence. PVNGS maintains the maximum available nuclear liability insurance in the amount of $500 million, which is provided by American Nuclear Insurers. The remaining $15.8 billion is provided through a mandatory industry-wide retrospective assessment program. If losses at any nuclear power plant covered by the program exceed the accumulated funds, PNM could be assessed retrospective premium adjustments. The maximum retrospective premium per reactor under the program for each nuclear liability incident is $165.9 million, subject to a maximum annual premium of $24.7 million per incident. Based on PNM's ownership interest in the three units, PNM's maximum retrospective premium per incident for all three units is $12.1 million, with a maximum annual payment limitation of $1.8 million, to be adjusted periodically for inflation.

The PVNGS participants maintain insurance for damage to and decontamination of property at PVNGS in the aggregate amount of $2.8 billion, a substantial portion of which must first be applied to stabilization and decontamination. These coverages are provided by Nuclear Electric Insurance Limited ("NEIL"). If NEIL's losses in any policy year exceed accumulated funds, PNM is subject to retrospective premium adjustments of $5.0 million. The insurance coverage discussed in this and the previous paragraph are subject to certain policy conditions, sublimits, and exclusions.

**(12) Regulatory and Rate Matters**

The Company is involved in various regulatory matters, some of which contain contingencies that are subject to the same uncertainties as those described in Note 11. Additional information concerning regulatory and rate matters is contained in Note 17 of the Notes to Consolidated Financial Statements in the 2025 Annual Reports on Form 10-K.

**TXNM**

*Merger Proceedings*

On August 25, 2025, TXNM filed applications for approval of its proposed Merger with Blackstone Infrastructure (Note 17) with the NMPRC, PUCT, and FERC. In addition to strong governance and oversight provisions, the applications include the following benefits for PNM and TNMP's customers:

Application to the NMPRC

- $105.0 million in retail rate credits to be paid over four years
- $10.0 million in additional contributions to the PNM Good Neighbor Fund to be paid over 10 years
- $35.0 million in economic development funding to be paid over 10 years
- $25.0 million commitment to innovative technologies to support New Mexico's transition to carbon-free energy
- PNM's continued strong community involvement and charitable giving

The NMPRC does not have a statutory timeframe for consideration of the application. On December 5, 2025, the deadline for intervention passed with 19 parties intervening in the matter.

Table of Contents

**TXNM ENERGY, INC. AND SUBSIDIARIES**
**PUBLIC SERVICE COMPANY OF NEW MEXICO AND SUBSIDIARIES**
**TEXAS-NEW MEXICO POWER COMPANY AND SUBSIDIARIES**

**NOTES TO CONDENSED CONSOLIDATED FINANCIAL STATEMENTS**
(Unaudited)

On February 6, 2026, a motion and brief for order was filed, directing the applicants to show cause and for other relief in the pending application with the NMPRC. The motion alleges that the purchase of $400.0 million of TXNM common stock violated Section 62-6-12 of the Public Utility Act because PNM did not receive prior approval of the purchase from the NMPRC. TXNM and PNM believe that the allegations in the motion do not constitute a violation of the Public Utility Act and filed responses in opposition to the motion on February 18, 2026. On March 11, 2026, the NMPRC hearing examiners issued an order granting the February 2, 2026, motion to direct the applicants to show cause regarding the $400.0 million purchase of TXNM common stock. The order initiates a formal investigation to determine whether the stock acquisition violated Section 62-6-12 of the Public Utility Act and any legal and practical consequences of such violation.

On March 16, 2026, a status conference was held to determine whether or not this matter warranted a delay in the procedural schedule of the pending Merger application including the evidentiary hearing initially scheduled for May 4-15, 2026. On March 17, 2026, the NMPRC issued a final order staying the procedural schedule and deadlines related to the pending Merger application and ordered a scheduling conference to be held on May 6, 2026. The NMPRC also issued a final order in the show cause motion, for which a public hearing was held on April 30, 2026. On May 5, 2026, the NMPRC issued an Order vacating the scheduling conference and on May 8, 2026, the NMPRC issued a revised procedural schedule setting the hearing for August 17-28, 2026.

On June 8, 2026, the Hearing Examiners issued a RD concluding that the purchase of $400.0 million of TXNM common stock violated Section 62-6-12 of the Public Utility Act because it occurred without prior NMPRC approval. Applicants are required to submit a detailed compliance plan within 45 days of receiving a Final Order to show how the transaction will be unwound ensuring ratepayers are fully protected from all impacts. On July 2, 2026, the NMPRC issued a Final Order largely adopting the RD and imposing a $100,000 penalty on TXNM for the violation. Additionally, the NMPRC has stayed the procedural schedule in the Merger application. The Company cannot predict the outcome of this matter.

On July 27, 2026, TXNM filed its compliance filing with the NMPRC detailing the unwinding of the May 2025 Stock Purchase Agreement by cancelling the 8,000,000 shares of TXNM common stock sold as of July 2, 2026, drawing on the $400.0 million TXNM 2026 Delayed-Draw Term Loan, and repaying the aggregate $400.0 million received in the May 2025 Stock Purchase Agreement (Note 9). The NMPRC and other parties may take 30 days to review the compliance filing and respond as to whether the action taken to unwind the May 2025 Stock Purchase Agreement adequately protects ratepayers from the consequences of effectuating the void status. TXNM intends to issue shares of TXNM common stock to repay the $400.0 million TXNM 2026 Delayed-Draw Term Loan through either publicly registered offerings or private placement transactions. On July 31, 2026, TXNM filed a petition with the NMPRC for a declaratory order that the proposed equity transactions do not require prior NMPRC approval and requested that the NMPRC expedite approval of the petition. The Company cannot predict the outcome of this matter.

Application to the PUCT

- Rate credits of $35.0 million to be paid over four years
- $10.0 million in economic development funding to be paid over 10 years
- $5.0 million in additional community support over 10 years to enhance charitable giving

On December 11, 2025, TXNM and Blackstone Infrastructure reached a unanimous settlement with parties in its Merger proceeding filed with the PUCT. Terms of the settlement include additional financial oversight, corporate governance and regulatory protections that favor local communities and the current workforce. Additionally, the settlement removed the $10.0 million in economic development and the $5.0 million in charitable giving and increased the rate credits from $35.0 million to $45.5 million to be paid over four years. The settlement was approved by the PUCT on February 6, 2026.

Application to the FERC

In October 2025, a protest was filed arguing that the proposed Merger posed significant risk of unlawful cross-subsidization, especially benefitting Blackstone Infrastructure's data centers and energy affiliates, and could harm competition, rates, and regulatory oversight. On February 20, 2026, FERC approved the proposed Merger concluding that there is no adverse effect on competition, no adverse rate impacts, and no regulatory gap. FERC rejected claims related to data centers, private equity ownership, and speculative cross-subsidization relying on existing state ring-fencing protections in New Mexico and Texas. On March 23, 2026, a request for rehearing was filed concerning FERC's February 20, 2026, approval of the proposed Merger. The request is based on the recent developments in the application before the NMPRC and the show cause order, discussed above. The request argues that this procedural uncertainty may justify FERC's reconsideration. On April 23, 2026, FERC issued a notice of denial of rehearing by operation of law and providing further consideration. On July 17, 2026, a

Table of Contents

**TXNM ENERGY, INC. AND SUBSIDIARIES**
**PUBLIC SERVICE COMPANY OF NEW MEXICO AND SUBSIDIARIES**
**TEXAS-NEW MEXICO POWER COMPANY AND SUBSIDIARIES**

**NOTES TO CONDENSED CONSOLIDATED FINANCIAL STATEMENTS**
(Unaudited)

motion was filed seeking to notify FERC of the NMPRC's July 2, 2026, Final Order in the show cause proceeding and asking FERC to consider that order in connection with the pending rehearing request. FERC has not yet issued an order addressing the merits of the rehearing request. The Company cannot predict the outcome of this matter.

**PNM**

*New Mexico General Rate Case*

*2025 Rate Request*

In June 2024, PNM filed an application with the NMPRC for a general increase in retail electric rates. The proposed base rate changes would be implemented in two phases, with the first phase effective July 1, 2025 and the second phase effective January 1, 2026. In November 2024, PNM filed an unopposed comprehensive stipulation with the NMPRC that was approved on May 15, 2025, with the base rate changes becoming effective July 1, 2025 and April 1, 2026. Key components agreed upon by the signatories may be found in Note 17 of the Notes to Consolidated Financial Statements in the 2025 Annual Reports on Form 10-K. This matter is now concluded.

*Renewable Energy Portfolio Standard*

As discussed in Note 11, the ETA amends the REA including removal of diversity requirements and certain customer caps and exemptions relating to the application of the RPS under the REA. The REA provides for streamlined proceedings for approval of utilities' renewable energy procurement plans, assures that utilities recover costs incurred consistent with approved procurement plans, and requires the NMPRC to establish a Reasonable Cost Threshold ("RCT") for the procurement of renewable resources to prevent excessive costs being added to rates. The ETA sets a RCT of $60 per MWh, adjusted for inflation, using an average annual levelized resource cost basis. PNM makes renewable procurements consistent with the NMPRC approved plans and recovers certain renewable procurement costs from customers through the renewable energy rider billed on a KWh basis.

The following sets forth PNM's revenue recorded under the renewable energy rider:

| Effective date January 1, | Annual Revenue Collection | Revenues Recorded | |
|---|---|---|---|
| | | Three months ended June 30, | Six months ended June 30, |
| | | (In millions) | |
| 2025 | $58.7 | $14.6 | $31.6 |
| 2026 | 54.3 | 16.6 | 32.2 |

Under the renewable rider, if PNM's earned rate of return on jurisdictional equity in a calendar year, adjusted for items not representative of normal operations, exceeds the NMPRC-approved rate by 0.5%, PNM is required to refund the excess to customers during May through December of the following year. PNM did not exceed such limitation in 2025. On May 28, 2026, PNM filed its application, requesting to collect $53.0 million for 2027 costs beginning on January 1, 2027.

*Energy Efficiency and Load Management*

On April 15, 2026, PNM filed its application with the NMPRC for energy efficiency and load management programs to be offered in 2027, 2028, and 2029 (the "2027 Plan") in compliance with the EUEA. The 2027 Plan proposed to continue ten existing energy efficiency programs with modifications and total annual budgets of $45.6 million in 2027, $47.6 million in 2028, and $48.8 million in 2029. The application also sought approval of an annual base incentive of 7.1% of the portfolio budget and a sliding scale that provides additional incentive for additional energy saved as a percentage of program cost, up to the maximum allowed by the energy efficiency rule which for PNM is 10.54%. PNM cannot predict the outcome of this matter.

*Integrated Resource Plans*

NMPRC rules require that investor-owned utilities file an IRP every three years that covers a 20-year planning period and contains an action plan covering the first three years of that period. The IRP establishes a collaborative facilitated process for a utility and stakeholders to agree on a statement of need for potential new or additional resources, as well as an action plan to guide procurement or development of resources to meet the stated need. A most-cost-effective portfolio of resources shall be derived from the statement of need analysis. The statement of need and action plan must be accepted before the utility begins

Table of Contents

**TXNM ENERGY, INC. AND SUBSIDIARIES**
**PUBLIC SERVICE COMPANY OF NEW MEXICO AND SUBSIDIARIES**
**TEXAS-NEW MEXICO POWER COMPANY AND SUBSIDIARIES**

**NOTES TO CONDENSED CONSOLIDATED FINANCIAL STATEMENTS**
(Unaudited)

the resource solicitation process pursuant to the IRP Rule. Following acceptance of the statement of need and action plan, a utility will provide the NMPRC and intervenors drafts of the RFP and a timeline for issuing, receiving, evaluating, and ranking bids. The NMPRC will then appoint an Independent Monitor ("IM") to oversee the RFP process, which allows for parties and the IM to comment on the RFP consistency with the IRP, after which the utility issues the RFP. Within 120 days of receiving bids the utility shall provide the IM with results including pricing and non-price evaluation criteria, ranking of bids, chosen portfolio and alternatives that also meet the needs; the IM then rules on the fairness of the RFP execution. Acceptance of the statement of need and action plan will not constitute a finding of prudency or pre-approval of costs associated with the additional resources. Following the RFP and IM processes, the utility may apply for approvals, and any costs incurred to implement the action plan will be considered in a general rate case and/or resource acquisition proceeding.

*2023 IRP*

On December 15, 2023, PNM filed its 2023 IRP with a continued focus on a carbon-free energy system by 2040. See Note 17 of the Notes to Consolidated Financial Statements in the 2025 Annual Reports on Form 10-K for details related to the filing.

On December 30, 2024, PNM issued its 2029-2032 RFP for at least 900 MW of new energy resources to come online between 2029 and 2032, with at least 500 MW needed by 2030. The RFP is consistent with the needs identified in PNM's 2023 IRP, which identified a range of 900 to 2,900 MW of new capacity needed by 2032, depending on the type of resources selected. The 2029-2032 RFP is anticipated to identify potential replacement resources for PNM's current natural gas generation capacity as well as PNM's ownership interest in Four Corners. On January 2, 2026, PNM filed a Notice of Material Event for the 2023 IRP to inform the NMPRC of its intent to issue a supplemental RFP for gas-fired resources in response to new customer requirements that have accelerated and increased energy demands beyond previously forecasted resources. On February 4, 2026, the IM appointed to the 2029-2032 RFP concluded that PNM appropriately evaluated the bids, made reasonable portfolio selection decisions, and overall, the RFP process was conducted in a fair, transparent manner that was in compliance with regulatory requirements. On March 6, 2026, PNM filed its draft supplemental RFP for the additional resources anticipated. On April 4, 2026, the IM issued a design report on PNM's draft supplemental RFP which contained targeted modifications to improve transparency, expand participation, and strengthen competitive neutrality within the class of eligible firm resources. PNM filed responses to the IM design report and issued a supplemental RFP on May 1, 2026.

On May 29, 2026, PNM filed its 2029-2032 Resource Portfolio Application with the NMPRC. The application seeks approval of a balanced portfolio that includes:

- 800 MW of wind PPAs
- 240 MW of solar PPAs
- 610 MW of battery storage ESAs
- 40 MW of dispatchable natural gas generation (expansion of PNM-owned capacity)
- Abandonment and exit of PNM's interest in Four Corners in 2031

The application also includes a request for an accounting order under SB 170 (discussed below) for certain resources associated with future economic development and gives notice that PNM intends to extend operations of the existing Reeves Generating Station through the end of 2044 to provide additional resource assurance. The proposed portfolio addresses projected resource shortfalls beginning in 2029, driven by load growth and the need to replace capacity as PNM exits Four Corners. As a result, PNM has requested that the NMPRC adhere to the six-month review timeline for PPAs and ESA and to expedite the review of the natural gas project. PNM cannot predict the outcome of this matter.

*Grid Modernization Plan*

In October 2022, in compliance with New Mexico Grid Modernization Statute, PNM filed its Grid Modernization Plan with the NMPRC. The projects included in the application improve customers' ability to customize their use of energy and ensure that customers, including low-income customers, are a top priority and will receive benefits consistent with the Grid Modernization Statute. PNM's proposal to modernize its electricity grid through infrastructure and technology improvements also increases the efficiency, reliability, resilience, and security of PNM's electric system. PNM's application included grid modernization investments of approximately $344 million for the first six years of a broader 11-year strategy. The approved rate rider will recover capital costs, operating expenses, and taxes associated with the investments included in the Grid Modernization Plan. On October 17, 2024, the NMPRC issued a final order largely approving PNM's application with minor modifications.

Table of Contents

**TXNM ENERGY, INC. AND SUBSIDIARIES**
**PUBLIC SERVICE COMPANY OF NEW MEXICO AND SUBSIDIARIES**
**TEXAS-NEW MEXICO POWER COMPANY AND SUBSIDIARIES**

**NOTES TO CONDENSED CONSOLIDATED FINANCIAL STATEMENTS**
(Unaudited)

On June 20, 2025, PNM filed its first annual Grid Modernization Plan review to provide updates on year one implementation progress and outline planned activities for year two, in alignment with regulatory expectations. Additionally, PNM has updated key portions of the forecasted strategy including increasing investments from approximately $344 million to $367 million in the first six years, while decreasing projected operations and maintenance costs by approximately 18%. On February 26, 2026, the NMPRC approved PNM's first annual Grid Modernization Review and the updated year two revenue requirement. This matter is now concluded.

On March 2, 2026, PNM filed its first annual Grid Modernization Plan reconciliation filing to reconcile the year one actual revenue requirement to the approved revenue requirement. On March 16, 2026, PNM filed the advice notice for the rider to collect the year one revenue requirement of $7.7 million with an effective date of April 15, 2026. The advice notice became effective on April 15, 2026, by operation of law.

In February 2025, the NMPRC issued a NOPR proposing a rule within the Grid Modernization Statute requiring electric utilities to file a grid plan every three years to establish transparency in distribution planning and assessment of the current and future grid system for areas of potential expansions, upgrades, and grid enhancing technologies that would improve system reliability, resiliency, and wildfire prevention. On January 30, 2026, the NMPRC issued an order directing PNM to file a one-time distribution system plan by October 1, 2026, that will act as a pilot for future formal planning and will undergo full NMPRC review under the existing Grid Modernization Statute. In a clarification order issued on March 13, 2026, the NMPRC gave PNM the discretion to treat the upcoming filing, due October 1, 2026, as an informational filing for acceptance or as a request for review and approval by the NMPRC.

On April 10, 2026, PNM filed its second annual Grid Modernization Plan review to provide updates on implementation progress, costs, and revenue requirements for years two through six. In the filing, PNM requested approval of updated year three costs and revenue requirement estimates, including the presumption of reasonableness, authorization of capital treatment of software as a service costs for years two through six, and issuance of a final order no later than October 15, 2026. On May 1, 2026, a procedural order was issued scheduling an evidentiary hearing for August 11-12, 2026.

*Transportation and Electrification Program (TEP)*

On June 1, 2026, PNM filed its 2027-2029 TEP with the NMPRC, requesting approval of a $32.9 million total three-year budget and continuation of the current TEP Rider. Approximately 40% of the budget, $13.2 million, will be dedicated to low-income customers and underserved communities. PNM cannot predict the outcome of this matter.

*BESS Project*

On August 6, 2025, PNM filed an application with the NMPRC for approval of a CCN to construct, own, and operate 30 MWs of energy storage. The application consists of 6 MW batteries to be constructed at five existing PNM-owned solar facilities located in Otero County, San Miguel County, Luna County and two sites in Valencia County. PNM estimates that the BESS Project will cost $78.7 million and will assist in serving our summer peak season when operational. PNM expects to seek recovery of these costs in a future rate case. On March 10, 2026, the hearing examiner issued an RD recommending approval of the CCN that was approved in a final order issued by the NMPRC on April 10, 2026. This matter is now concluded.

*SB 170 Projects*

The enactment of Senate Bill 170 ("SB 170") allows a utility to defer costs of economic development projects that serve sites certified by the New Mexico Economic Development Department ("NMEDD"). On December 29, 2025, PNM filed an application with the NMPRC for approval of two economic development projects including the Westpointe and Mesa Del Sol Substations and the issuance of an accounting order to defer the costs of the projects as regulatory assets. The projects are estimated to cost $165.5 million and are expected to be reviewed in a future rate proceeding. On March 13, 2026, the NMPRC voted to approve PNM's application for the economic development projects and issued an accounting order, concluding this matter. The projects remain subject to NMPRC review for necessity and prudence in a future rate proceeding.

*Rio Puerco-Pajarito-Prosperity CCN*

On December 30, 2025, PNM filed an application with the NMPRC for approval of a CCN and a determination for a new right-of-way. The CCN encompasses a new 345 kV transmission line, existing station expansions, and a new substation.

Table of Contents

**TXNM ENERGY, INC. AND SUBSIDIARIES**
**PUBLIC SERVICE COMPANY OF NEW MEXICO AND SUBSIDIARIES**
**TEXAS-NEW MEXICO POWER COMPANY AND SUBSIDIARIES**

**NOTES TO CONDENSED CONSOLIDATED FINANCIAL STATEMENTS**
(Unaudited)

This project aims to enhance reliability and resilience in the Albuquerque area, facilitate the integration of renewable energy, and support economic development. On February 13, 2026, the NMPRC dismissed the application without prejudice and on February 25, 2026, PNM filed a new application for approval of the CCN providing additional clarity and more information on the project. The estimated cost of the project is approximately $247 million and is expected to be reviewed in a future rate proceeding. On March 12, 2026, the Hearing Examiner issued a procedural order setting a public hearing for August 26, 2026. On July 24, 2026, the hearing examiner issued a RD approving PNM's request for determination of a new right-of-way for the Rio Puerco-Pajarito-Prosperity 345kV transmission line project. The RD is limited to the right-of-way determination and does not address project need, routing, costs, ratemaking treatment, or the requested CCN. PNM cannot predict the outcome of this matter.

**TNMP**

*TNMP Base Rate Review*

On November 14, 2025, TNMP filed a general rate proceeding with the PUCT (the "TNMP Base Rate Review") requesting recovery of $2.8 billion of rate base as of June 30, 2025, a requested ROE of 10.4%, and a 47.54% equity ratio. The TNMP Base Rate Review also includes increases in operations and maintenance expenses that are not recovered through semi-annual TCOS and DCRF filings, excludes increases in interest expense resulting from refinancing of debt associated with the proposed Merger, and requests recovery of $20.5 million associated with Hurricane Beryl restoration costs over a five-year period. If approved by the PUCT, the new rates are expected to become effective in mid-2026. A hearing on the merits was set for March 9-12, 2026. On March 6, 2026, TNMP, on behalf of all parties to the proceeding, filed a motion to abate the procedural schedule on the merits of continuing their efforts to reach a full resolution and settlement. On March 9, 2026, the hearing was cancelled. On May 29, 2026, TNMP and all parties to the proceeding reached a settlement and filed an unopposed stipulation (the "Stipulation") with the PUCT. The Stipulation agreed to TNMP's recovery of $2.8 billion of rate base, a ROE of 9.65% and a 45% equity ratio. Final rates in the Stipulation are effective 45 days from the PUCT's Final Order and TNMP will establish a surcharge to recover interim rates after the PUCT's Final Order in the proceeding. On July 30, 2026, the PUCT issued its Final Order approving the Stipulation.

*Large Load Interconnection Rulemaking*

In July 2025, PUCT Staff opened a rulemaking project to implement large load interconnection standards required by Texas legislation. The legislation directs the PUCT to establish standards for interconnecting large load customers in the ERCOT region in a manner that supports business development, minimizes the risk of stranded infrastructure costs, and maintains system reliability. TNMP participated in a workshop on this initiative in January 2026. On February 6, 2026, the PUCT adopted Rule 25.370, which requires the power demands of large load customers of 75 MW or more, to be incorporated into ERCOT's Regional Transmission Plan and resource adequacy assessments. The rule establishes thresholds and criteria for identifying large load customers and requires them to demonstrate verifiable progress toward site control, financing, and towards state and local regulatory approvals. Large load customers must also provide attestations to transmission and distribution service providers confirming the status and timeline of their project load ramp schedules. Since the rule's effectiveness and the establishment of "batch zero" by ERCOT, TNMP has experienced an increase in transmission interconnection requests. As of June 30, 2026, TNMP has $29.5 million in deposits recorded in Other deferred credits on its Condensed Consolidated Balance Sheet.

*Sales and Use Tax Refunds*

On March 12, 2025, TNMP filed a refund claim with the Texas Comptroller's office for overpaid sales and use taxes primarily related to asset purchases. The $34.6 million refund claim covers periods from January 2022 to October 2024, and amounts received, net of consultant fees, are expected to be applied to 2025 TNMP capital projects. On September 22, 2025, TNMP received the requested refund net of $7.5 million in consultant fees; $24.7 million was applied to 2025 TNMP capital projects; $2.1 million to offset related interest expense; and $0.3 million for other related expenses. On October 15, 2025, TNMP filed another refund claim for $5.1 million for overpaid sales and use taxes primarily related to asset purchases covering the period from November 2024 through February 2025. On June 25, 2026, the Texas Comptroller's Office issued an adjustment report indicating that the refund claim had been approved and interest would be accruing at a daily rate until paid. TNMP expects to receive the requested refund net of $1.1 million in consultant fees and apply $3.8 million to capital projects with the remaining $0.2 million to offset related interest expense.

Table of Contents

**TXNM ENERGY, INC. AND SUBSIDIARIES**
**PUBLIC SERVICE COMPANY OF NEW MEXICO AND SUBSIDIARIES**
**TEXAS-NEW MEXICO POWER COMPANY AND SUBSIDIARIES**

**NOTES TO CONDENSED CONSOLIDATED FINANCIAL STATEMENTS**
(Unaudited)

*Transmission Cost of Service Rates*

TNMP can update its TCOS rates twice per year to reflect changes in its invested capital although updates are not allowed while a general rate case is in process. Updated rates reflect the addition and retirement of transmission facilities, including appropriate depreciation, federal income tax and other associated taxes, and the approved rate of return on such facilities. The following sets forth TNMP's recent interim transmission cost rate increases:

| Effective Date | Approved Increase in Rate Base | Annual Increase in Revenue |
|---|---|---|
| | (In millions) | |
| March 15, 2024 | $ 97.4 | $ 13.1 |
| September 20, 2024 | 20.6 | 3.9 |
| March 25, 2025 | 83.5 | 11.5 |
| September 19, 2025 | 87.4 | 12.3 |

*Periodic Distribution Rate Adjustment*

PUCT rules permit interim rate adjustments twice per year to reflect changes in investments in distribution assets. Additionally, a DCRF may be filed during a pending rate case proceeding as long as that DCRF request is not filed until the 185th day after the rate case proceeding was initiated. The following sets forth TNMP's recent interim distribution rate increases:

| Effective Date | Approved Increase in Rate Base | Annual Increase in Revenue |
|---|---|---|
| | (In millions) | |
| September 1, 2023 | $ 157.0 | $ 14.5 |
| July 28, 2024 | 205.9 | 15.6 |
| November 17, 2024 | 43.7 | 7.7 |
| June 29, 2025 | 176.6 | 25.0 |
| December 29, 2025 | 18.9 | 1.8 |

*HB 5247*

On June 20, 2025, Texas House Bill 5247 ("HB 5247") was signed into law by Governor Gregg Abbott. HB 5247, which took effect immediately, added Section 36.216 to the Public Regulatory Act ("PURA 36.216"), authorizing certain electric utilities with total capital expenditures that exceeded 300 percent of annual depreciation in a calendar year, to elect, in the following calendar year, to file a single, annual proceeding to adjust nonfuel rates on a system-wide basis to reflect changes in transmission and distribution rates previously authorized under certain other interim rate mechanisms. A utility seeking to make this election under PURA 36.216 is required to file a notice with the PUCT informing them of its intent and provide supporting documentation of the applicable capital expenditures at least 60 days before filing the single, annual proceeding and correspondingly must notify the PUCT if the utility determines that it no longer qualifies for continued use of the election. Management has evaluated the application of HB 5247 and PURA 36.216 and determined that TNMP qualifies as the type of electric utility that would be eligible for the election. Upon completion of its general rate proceeding discussed above, TNMP expects to make its first comprehensive filing under Section 36.216 with a view towards recovering costs associated with eligible transmission and distribution investments that were placed into service after December 31, 2024, and that are not currently reflected in rates. In the interim, TNMP is recognizing a regulatory asset for costs associated with eligible transmission and distribution capital investments and is offsetting depreciation, property tax expense, and carrying costs within alternative revenue. At June 30, 2026, and December 31, 2025, the regulatory asset associated with these costs totaled $36.8 million and $17.5 million.

*Energy Efficiency*

TNMP recovers the costs of its energy efficiency programs through an energy efficiency cost recovery factor ("EECRF"), which includes projected program costs, under and over collected costs from prior years, rate case expenses, and performance bonuses (if programs exceed mandated savings goals). On May 30, 2025, TNMP filed its request to adjust the

Table of Contents

**TXNM ENERGY, INC. AND SUBSIDIARIES**
**PUBLIC SERVICE COMPANY OF NEW MEXICO AND SUBSIDIARIES**
**TEXAS-NEW MEXICO POWER COMPANY AND SUBSIDIARIES**

**NOTES TO CONDENSED CONSOLIDATED FINANCIAL STATEMENTS**
(Unaudited)

EECRF to reflect changes in costs for 2026. On November 14, 2025, the total amount requested of $8.1 million, which includes a performance bonus of $2.5 million, based on TNMP's energy efficiency achievements in 2024, was approved and took effect March 1, 2026. On May 29, 2026, TNMP filed its request to adjust the EECRF to reflect changes in costs for 2027. The total amount requested was $9.5 million, which includes a performance bonus of $1.2 million based on TNMP's energy efficiency achievements in 2025. The case is pending review by the PUCT.

*System Resiliency Plan ("SRP")*

In 2023, the Texas Legislature enacted House Bill No. 2555 ("HB 2555"), permitting an electric utility to seek approval of, and cost recovery for, a system resiliency plan. On August 28, 2024, TNMP filed its first SRP with the PUCT designed to benefit customers through enhanced resiliency of its distribution system, as intended under HB 2555. The SRP includes approximately $600 million of capital investments and approximately $151 million of other related costs over three years and was developed using a comprehensive and data-driven approach which evaluated various types of resiliency events posing material risk to the safe and reliable operation of TNMP's distribution system. TNMP's service territory includes non-contiguous areas across different regions of Texas, ranging from small communities and rural areas to communities around large metropolitan areas, each with unique risks. Investments in the SRP are prioritized based on customer benefit, physical protection of infrastructure, foundational investments in operational and cybersecurity technologies, and wildfire risk reduction and are focused on lower-performing areas in the context of reliability. Eight different resiliency measures are outlined in the SRP with associated programs and infrastructure impacts to improve the system's ability to prevent, withstand, mitigate and/or more promptly recover from resiliency events: distribution system resiliency, distribution system protection modernization, vegetation management, wildfire mitigation, flood mitigation, enhanced operations system technology, cybersecurity, and physical security resiliency. Recovery of investments and costs are permissible primarily through DCRF filings, with deferral of depreciation and other certain expenses until recovery begins.

On December 11, 2024, TNMP filed an unopposed settlement with the PUCT. The settlement includes $565.8 million of capital investments over 2025 through 2027, reflecting 94% of TNMP's proposed plan investments. The settlement also encompasses $128.2 million of operations and maintenance expenses associated with several programs, including vegetation management and wildfire mitigation. On March 26, 2025, TNMP received the final order from the PUCT which included modifications reflecting capital investments of $545.8 million and $86.1 million of operating and maintenance costs. As of June 30, 2026 and December 31, 2025, TNMP incurred $26.7 million and $10.6 million of operating and maintenance costs, all of which have been recorded as a Regulatory Asset on the Condensed Consolidated Balance Sheets. TNMP will seek collection of such costs in a future regulatory proceeding.

**(13) Lease Commitments**

The Company leases office buildings, vehicles, energy storage facilities, and other equipment. In addition, certain rights-of-way agreements are classified as leases. All of the Company's leases with terms in excess of one year are recorded on the balance sheet by recording a present value lease liability and a corresponding right-of-use asset. Operating lease expense is recognized within operating expenses according to the use of the asset on a straight-line basis. Financing lease costs, which are comprised primarily of fleet and office equipment leases commencing after January 1, 2019, are recognized by amortizing the right-of-use asset on a straight-line basis and by recording interest expense on the lease liability. Financing lease right-of-use assets amortization is reflected in depreciation and amortization and interest on financing lease liabilities is reflected as interest charges on the Company's Condensed Consolidated Statements of Earnings. See additional discussion of the Company's leasing activities in Note 8 of the Notes to Consolidated Financial Statements in the 2025 Annual Reports on Form 10-K.

*Land Easements and Rights-of-Way*

Many of PNM's electric transmission and distribution facilities are located on lands that require the grant of rights-of-way from governmental entities, Native American tribes, or private parties. PNM has completed several renewals of rights-of-way, the largest of which is a renewal with the Navajo Nation. PNM is obligated to pay the Navajo Nation annual payments of $6.0 million, subject to adjustment each year based on the Consumer Price Index, through 2029. PNM's April 2026 payment for the amount due under the Navajo Nation right-of-way lease was $9.1 million, which included amounts due under the Consumer Price Index adjustment. Changes in the Consumer Price Index subsequent to January 1, 2019, are considered variable lease payments.

PNM has other prepaid rights-of-way agreements that are not accounted for as leases or recognized as a component of plant in service. PNM reflects the unamortized balance of these prepayments in other deferred charges on the Condensed Consolidated Balance Sheets and recognizes amortization expense associated with these agreements in the Condensed

Table of Contents

**TXNM ENERGY, INC. AND SUBSIDIARIES**
**PUBLIC SERVICE COMPANY OF NEW MEXICO AND SUBSIDIARIES**
**TEXAS-NEW MEXICO POWER COMPANY AND SUBSIDIARIES**

**NOTES TO CONDENSED CONSOLIDATED FINANCIAL STATEMENTS**
(Unaudited)

Consolidated Statement of Earnings over their term. As of June 30, 2026 and December 31, 2025, the unamortized balance of these rights-of-ways was $90.2 million and $69.2 million. PNM recognized amortization expense associated with these agreements of $1.1 million and $2.3 million in the three and six months ended June 30, 2026, and $1.2 million and $2.2 million in the three and six months ended June 30, 2025.

*Fleet Vehicles and Equipment*

Fleet vehicle and equipment leases commencing on or after January 1, 2019, are classified as financing leases. Fleet vehicle and equipment leases existing as of December 31, 2018, are classified as operating leases. The Company's fleet vehicle and equipment lease agreements include non-lease components for insignificant administrative and other costs that are billed over the life of the agreement. At June 30, 2026, residual value guarantees on fleet vehicle, and equipment leases are $0.6 million, $0.5 million, and $1.1 million for PNM, TNMP, and TXNM Consolidated.

*Energy Storage Agreements*

The Company has ESAs with fixed payments over the life of the agreements, that are accounted for as operating leases, for which the Company records the initial lease liabilities and corresponding right-of-use assets. The Company also has ESAs with monthly payments that vary, depending on the available capacity of the energy storage facility, that are also accounted for as operating leases. However, due to the variable nature of the consideration, these agreements do not require a lease liability or a right-of-use asset to be recorded upon inception. Expenses for this type of lease are reflected in variable lease expense in the tables below. During the first quarter of 2026, one existing fixed payment ESA was amended to variable payments based on available capacity, resulting in a $57.2 million retirement of unamortized right-of-use assets and associated lease liabilities. In addition, the Company has elected to separate lease components from non-lease components for ESAs and accordingly does not include non-lease components in the measurement of the lease liability or right-of-use asset. The non-lease components, which are not included in the measurement of the lease liability or the corresponding right-of-use asset, comprise 25.5% of the value of the agreements.

Information related to the Company's operating leases recorded on the Condensed Consolidated Balance Sheets is presented below:

| | June 30, 2026 | | | December 31, 2025 | | |
|---|---|---|---|---|---|---|
| | PNM | TNMP | TXNM | PNM | TNMP | TXNM |
| | (In thousands) | | | | | |
| Operating leases: | | | | | | |
| Operating lease assets, net of amortization | $ 47,136 | $ 331 | $ 47,935 | $ 107,986 | $ 39 | $ 108,517 |
| Current portion of operating lease liabilities | 6,989 | 76 | 7,109 | 8,913 | 15 | 8,969 |
| Long-term portion of operating lease liabilities | 34,074 | 257 | 34,773 | 96,246 | 24 | 96,735 |

As discussed above, the Company classifies its fleet vehicle and equipment leases and its office equipment leases commencing on or after January 1, 2019 as financing leases.

Information related to the Company's financing leases recorded on the Condensed Consolidated Balance Sheets is presented below:

| | June 30, 2026 | | | December 31, 2025 | | |
|---|---|---|---|---|---|---|
| | PNM | TNMP | TXNM | PNM | TNMP | TXNM |
| | (In thousands) | | | | | |
| Financing leases: | | | | | | |
| Non-utility property | $ 31,350 | $ 38,985 | $ 71,870 | $ 30,555 | $ 33,344 | $ 65,366 |
| Accumulated depreciation | (15,254) | (15,106) | (31,089) | (13,079) | (14,319) | (27,928) |
| Non-utility property, net | 16,096 | 23,879 | 40,781 | 17,476 | 19,025 | 37,438 |
| | | | | | | |
| Other current liabilities | $ 5,771 | $ 7,795 | $ 13,946 | $ 5,764 | $ 6,604 | $ 12,743 |
| Other deferred credits | 10,358 | 16,135 | 26,950 | 11,740 | 12,456 | 24,786 |

Table of Contents

**TXNM ENERGY, INC. AND SUBSIDIARIES**
**PUBLIC SERVICE COMPANY OF NEW MEXICO AND SUBSIDIARIES**
**TEXAS-NEW MEXICO POWER COMPANY AND SUBSIDIARIES**

**NOTES TO CONDENSED CONSOLIDATED FINANCIAL STATEMENTS**
(Unaudited)

Information concerning the weighted average remaining lease terms and the weighted average discount rates used to determine the Company's lease liabilities is presented below:

| | June 30, 2026 | | | December 31, 2025 | | |
|---|---|---|---|---|---|---|
| | PNM | TNMP | TXNM | PNM | TNMP | TXNM |
| Weighted average remaining lease term (years): | | | | | | |
| Operating leases | 11.28 | 4.24 | 11.19 | 15.64 | 2.63 | 15.60 |
| Financing leases | 3.41 | 3.71 | 3.56 | 3.75 | 3.48 | 3.59 |
| Weighted average discount rate: | | | | | | |
| Operating leases | 5.18 % | 4.31 % | 5.18 % | 5.55 % | 5.39 % | 5.55 % |
| Financing leases | 5.36 % | 5.47 % | 5.42 % | 5.33 % | 5.43 % | 5.37 % |

Information for the components of lease expense is as follows:

| | Three Months Ended June 30, 2026 | | | Six Months Ended June 30, 2026 | | |
|---|---|---|---|---|---|---|
| | PNM | TNMP | TXNM | PNM | TNMP | TXNM |
| | (In thousands) | | | | | |
| Operating lease cost: | | | | | | |
| Energy storage leases | $ 395 | $ — | $ 395 | $ 1,250 | $ — | $ 1,250 |
| Other operating leases | 1,902 | 23 | 1,943 | 3,752 | 46 | 3,835 |
| Amounts capitalized | — | — | — | — | — | — |
| Total operating lease expense | 2,297 | 23 | 2,338 | 5,002 | 46 | 5,085 |
| Financing lease cost: | | | | | | |
| Amortization of right-of-use assets | 1,529 | 2,121 | 3,751 | 3,049 | 4,099 | 7,345 |
| Interest on lease liabilities | 225 | 338 | 574 | 460 | 626 | 1,108 |
| Amounts capitalized | (1,224) | (2,015) | (3,239) | (2,412) | (3,873) | (6,285) |
| Total financing lease expense | 530 | 444 | 1,086 | 1,098 | 852 | 2,169 |
| Variable lease expense | 19,844 | — | 19,844 | 35,186 | — | 35,186 |
| Short-term lease expense | 190 | 7 | 205 | 365 | 16 | 400 |
| Total lease expense for the period | $ 22,861 | $ 474 | $ 23,473 | $ 41,651 | $ 914 | $ 42,840 |

| | Three Months Ended June 30, 2025 | | | Six Months Ended June 30, 2025 | | |
|---|---|---|---|---|---|---|
| | PNM | TNMP | TXNM | PNM | TNMP | TXNM |
| | (In thousands) | | | | | |
| Operating lease cost: | | | | | | |
| Energy storage leases | $ 5,084 | $ — | $ 5,084 | $ 10,167 | $ — | $ 10,167 |
| Other operating leases | 1,863 | 131 | 2,012 | 3,726 | 285 | 4,048 |
| Amounts capitalized | (11) | (106) | (117) | (22) | (236) | (258) |
| Total operating lease expense | 6,936 | 25 | 6,979 | 13,871 | 49 | 13,957 |
| Financing lease cost: | | | | | | |
| Amortization of right-of-use assets | 1,230 | 1,549 | 2,864 | 2,431 | 2,843 | 5,452 |
| Interest on lease liabilities | 184 | 213 | 411 | 364 | 357 | 750 |
| Amounts capitalized | (898) | (1,455) | (2,354) | (1,778) | (2,650) | (4,428) |
| Total financing lease expense | 516 | 307 | 921 | 1,017 | 550 | 1,774 |
| Variable lease expense | 6,579 | — | 6,579 | 13,135 | — | 13,135 |
| Short-term lease expense | 178 | 8 | 198 | 369 | 12 | 423 |
| Total lease expense for the period | $ 14,209 | $ 340 | $ 14,677 | $ 28,392 | $ 611 | $ 29,289 |

Table of Contents

**TXNM ENERGY, INC. AND SUBSIDIARIES**
**PUBLIC SERVICE COMPANY OF NEW MEXICO AND SUBSIDIARIES**
**TEXAS-NEW MEXICO POWER COMPANY AND SUBSIDIARIES**

**NOTES TO CONDENSED CONSOLIDATED FINANCIAL STATEMENTS**
(Unaudited)

Supplemental cash flow information related to the Company's leases is as follows:

| | Six Months Ended June 30, 2026 | | | Six Months Ended June 30, 2025 | | |
|---|---|---|---|---|---|---|
| | PNM | TNMP | TXNM | PNM | TNMP | TXNM |
| | (In thousands) | | | | | |
| Cash paid for amounts included in the measurement of lease liabilities: | | | | | | |
| Operating cash flows from operating leases | $ 8,247 | $ 44 | $ 8,326 | $ 17,114 | $ 27 | $ 17,173 |
| Operating cash flows from financing leases | 147 | 140 | 309 | 131 | 97 | 256 |
| Finance cash flows from financing leases | 948 | 707 | 1,849 | 884 | 447 | 1,499 |
| Non-cash information related to right-of-use assets obtained in exchange for lease obligations: | | | | | | |
| Operating leases additions | $ — | $ 331 | $ 331 | $ 49 | $ 9 | $ 58 |
| Operating leases retirements | (385) | — | (385) | — | (271) | (271) |
| Financing leases | 1,681 | 8,994 | 10,744 | 2,789 | 5,855 | 8,848 |

Capitalized lease costs are reflected as investing activities on the Company's Condensed Consolidated Statements of Cash Flows for the six months ended June 30, 2026 and 2025.

Future expected lease payments are shown below:

| | As of June 30, 2026 | | | | | | | |
|---|---|---|---|---|---|---|---|---|
| | PNM | | | TNMP | | TXNM | | |
| | | Operating | | | | | Operating | |
| | Financing | Energy Storage | Other | Financing | Operating | Financing | Energy Storage | Other |
| | (In thousands) | | | | | | | |
| Remainder of 2026 | $ 3,510 | $ 891 | $ 98 | $ 4,684 | $ 44 | $ 8,407 | $ 891 | $ 177 |
| 2027 | 5,606 | 1,783 | 7,049 | 7,785 | 87 | 13,789 | 1,783 | 7,206 |
| 2028 | 4,101 | 1,783 | 7,052 | 6,129 | 83 | 10,443 | 1,783 | 7,208 |
| 2029 | 2,582 | 1,783 | 7,039 | 4,655 | 74 | 7,297 | 1,783 | 7,188 |
| 2030 | 1,070 | 1,783 | 164 | 2,038 | 76 | 3,112 | 1,783 | 317 |
| Later years | 746 | 22,604 | 3,497 | 1,025 | — | 1,771 | 22,604 | 3,772 |
| Total minimum lease payments | 17,615 | 30,627 | 24,899 | 26,316 | 364 | 44,819 | 30,627 | 25,868 |
| Less: Imputed interest | 1,486 | 11,705 | 2,759 | 2,386 | 31 | 3,923 | 11,705 | 2,908 |
| Lease liabilities | $ 16,129 | $ 18,922 | $ 22,140 | $ 23,930 | $ 333 | $ 40,896 | $ 18,922 | $ 22,960 |

The above table includes $15.5 million, $20.1 million, and $35.8 million for PNM, TNMP, and TXNM at June 30, 2026, for expected future payments on fleet vehicle and equipment leases that could be avoided if the leased assets were returned and the lessor is able to recover estimated market value for the equipment from third parties.

At June 30, 2026, the Company has an ESA that has been executed with a lease component that has not yet commenced. The lease component begins in 2029, expires in 2044, and will be recognized as a lease asset and liability upon the commencement. The expected total fixed consideration to be paid for this arrangement, which includes non-lease payments, is approximately $94.3 million over the 20-year term of the agreement.

**(14) Income Taxes**

The Company makes an estimate of its anticipated effective tax rate for the year as of the end of each quarterly period within its fiscal year. In interim periods, income tax expense is calculated by applying the anticipated annual effective tax rate to year-to-date earnings before income taxes. Certain unusual or infrequently occurring items are excluded from the estimated annual rate calculation. Such items include regulatory disallowances, Merger-related costs, and excess tax benefits or deficiencies related to stock awards. At June 30, 2026, TXNM, PNM, and TNMP estimated their effective income tax rates for

Table of Contents

**TXNM ENERGY, INC. AND SUBSIDIARIES**
**PUBLIC SERVICE COMPANY OF NEW MEXICO AND SUBSIDIARIES**
**TEXAS-NEW MEXICO POWER COMPANY AND SUBSIDIARIES**

**NOTES TO CONDENSED CONSOLIDATED FINANCIAL STATEMENTS**
(Unaudited)

the year ended December 31, 2026, would be 15.11%, 12.44%, and 20.24%. The primary difference between the statutory income tax rates and the effective tax rates is the effect of the reduction in income tax expense resulting from the amortization of excess deferred federal income taxes.

During the six months ended June 30, 2026, income tax expense calculated by applying the expected annual effective income tax rate to earnings before income taxes was further decreased by excess tax benefits related to stock awards of $0.4 million for TXNM, of which $0.3 million was allocated to PNM and $0.1 million was allocated to TNMP and by tax benefits on Merger-related costs of $1.4 million for TXNM, of which $0.5 million was allocated to PNM and an immaterial amount was allocated to TNMP.

Beginning February 2018, PNM's NM 2016 Rate Case reflected the reduction in the federal corporate income tax rate resulting from enactment of legislation commonly known as the Tax Cuts and Jobs Act (the "TCJA"), including amortization of excess deferred federal income taxes. In accordance with the order in that case, PNM is returning the protected portion of excess deferred federal income taxes to customers over the average remaining life of plant in service as of December 31, 2017, and had been returning the unprotected portion of excess deferred federal income taxes to customers over a period of approximately twenty-three years. Pursuant to the final order in the 2024 Rate Change, the remaining balance of $62.7 million of unprotected excess deferred income taxes is being returned over a four-year period. The approved settlement in the TNMP 2018 Rate Case includes a reduction in customer rates to reflect the impacts of the TCJA beginning on January 1, 2019. TXNM, PNM, and TNMP will amortize federal excess deferred income taxes of $26.2 million, $23.5 million, and $2.7 million in 2026. See additional discussion of the impacts of the TCJA in Note 18 of the Notes to Consolidated Financial Statements in the 2025 Annual Reports on Form 10-K.

On July 4, 2025, changes in U.S. federal income tax laws were enacted through the OBBBA. The OBBBA generally extended and made permanent the changes from the TCJA, including maintaining the 21% corporate tax rate, interest deductibility for regulated electric utilities, and state and local tax deductibility. The OBBBA also accelerated the phase-out of certain Inflation Reduction Act of 2022 energy tax credits and restricts the availability of credits for "foreign entities of concern." As a result, TXNM anticipates potentially higher costs associated with any future renewable energy development but does not expect other aspects of the OBBBA to have a material impact on its financial statements.

**(15) Related Party Transactions**

TXNM, PNM, and TNMP are considered related parties, as is PNMR Services Company, a wholly-owned subsidiary of TXNM that provides corporate services to TXNM and its subsidiaries in accordance with shared services agreements. These services are billed at cost on a monthly basis to the business units. The table below summarizes the nature and amount of related party transactions of TXNM, PNM, and TNMP:

| | Three Months Ended June 30, | | Six Months Ended June 30, | |
|---|---|---|---|---|
| | 2026 | 2025 | 2026 | 2025 |
| | (In thousands) | | | |
| Services billings: | | | | |
| TXNM to PNM | $ 32,050 | $ 35,317 | $ 65,728 | $ 67,404 |
| TXNM to TNMP | 13,712 | 14,109 | 28,236 | 27,485 |
| PNM to TNMP | 72 | 86 | 134 | 165 |
| TNMP to TXNM | 21 | 28 | 42 | 56 |
| TNMP to PNM | — | — | — | — |
| Interest billings: | | | | |
| TXNM to PNM | 24 | 76 | 63 | 84 |
| PNM to TXNM | 110 | 132 | 225 | 265 |
| TXNM to TNMP | 8 | 41 | 23 | 186 |

**(16) Goodwill**

The excess purchase price over the fair value of the assets acquired and the liabilities assumed by TXNM for its 2005 acquisition of TNP was recorded as goodwill and was pushed down to the businesses acquired. In 2007, the TNMP assets that were included in its New Mexico operations, including goodwill, were transferred to PNM. TXNM's reporting units that currently have goodwill are PNM and TNMP. The Company evaluates its goodwill for impairment annually at the reporting unit level or more frequently if circumstances indicate that the goodwill may be impaired. Application of the impairment test requires judgment, including the identification of reporting units, assignment of assets and liabilities to reporting units, and determination of the fair value of each reporting unit.

Table of Contents

**TXNM ENERGY, INC. AND SUBSIDIARIES**
**PUBLIC SERVICE COMPANY OF NEW MEXICO AND SUBSIDIARIES**
**TEXAS-NEW MEXICO POWER COMPANY AND SUBSIDIARIES**

**NOTES TO CONDENSED CONSOLIDATED FINANCIAL STATEMENTS**
(Unaudited)

In certain circumstances an entity may perform a qualitative analysis to conclude that the goodwill of a reporting unit is not impaired. Under a qualitative assessment an entity considers macroeconomic conditions, industry and market considerations, cost factors, overall financial performance, other relevant entity-specific events affecting a reporting unit, as well as whether a sustained decrease (both absolute and relative to its peers) in share price has occurred. An entity considers the extent to which each of the adverse events and circumstances identified could affect the comparison of a reporting unit's fair value with its carrying amount. An entity places more weight on the events and circumstances that most affect a reporting unit's fair value or the carrying amount of its net assets. An entity also considers positive and mitigating events and circumstances that may affect its determination of whether it is more likely than not that the fair value of a reporting unit is less than its carrying amount. An entity evaluates, on the basis of the weight of evidence, the significance of all identified events and circumstances in the context of determining whether it is more likely than not that the fair value of a reporting unit is less than its carrying amount. A quantitative analysis is not required if, after assessing events and circumstances, an entity determines that it is not more likely than not that the fair value of a reporting unit is less than its carrying amount.

In other circumstances, an entity may perform a quantitative analysis to reach the conclusion regarding impairment with respect to a reporting unit. An entity may choose to perform a quantitative analysis without performing a qualitative analysis and may perform a qualitative analysis for certain reporting units, but a quantitative analysis for others. The first step of the quantitative impairment test requires an entity to compare the fair value of the reporting unit with its carrying value, including goodwill. If, as a result of this analysis, the entity concludes there is an indication of impairment in a reporting unit having goodwill, the entity is required to perform the second step of the impairment analysis, determining the amount of goodwill impairment to be recorded. The amount is calculated by comparing the implied fair value of the goodwill to its carrying amount. This exercise would require the entity to allocate the fair value determined in step one to the individual assets and liabilities of the reporting unit. Any remaining fair value would be the implied fair value of goodwill on the testing date. To the extent the recorded amount of goodwill of a reporting unit exceeds the implied fair value determined in step two, an impairment loss would be reflected in results of operations.

TXNM periodically updates its quantitative analysis for both PNM and TNMP. The use of a quantitative approach in a given period is not necessarily an indication that a potential impairment has been identified under a qualitative approach. When TXNM performs a quantitative analysis for PNM or TNMP, a discounted cash flow methodology is primarily used to estimate the fair value of the reporting unit. This analysis requires significant judgments, including estimations of future cash flows, which is dependent on internal forecasts, estimations of long-term growth rates for the business, and determination of appropriate weighted average cost of capital for the reporting unit. Changes in these estimates and assumptions could materially affect the determination of fair value and the conclusion of impairment. When TXNM performs a qualitative or quantitative analysis for PNM or TNMP, TXNM considers market and macroeconomic factors including changes in growth rates, changes in the WACC, and changes in discount rates. TXNM also evaluates its stock price relative to historical performance, industry peers, and to major market indices, including an evaluation of TXNM's market capitalization relative to the carrying value of its reporting units.

For its annual evaluations performed as of April 1, 2026 and 2025, TXNM performed a qualitative analysis for both the PNM and TNMP reporting units. In addition to the typical considerations discussed above, the qualitative analysis considered changes in the Company's expectations of future financial performance since the April 1, 2024, quantitative analysis performed for PNM, as well as the April 1, 2020, quantitative analysis and the previous qualitative analyses through April 1, 2024, performed for TNMP. This analysis considered Company-specific events such as the Merger, potential impacts of legal and regulatory matters discussed in Note 11 and Note 12, including the outcomes in the 2025 Rate Request, PNM's Grid Modernization Plan, and TNMP's System Resiliency Plan. Based on an evaluation of these and other factors, the Company determined it was not more likely than not that the April 1, 2026, carrying values of PNM and TNMP exceeded their fair value.

The quantitative analysis, discussed above, indicated that the fair value of the PNM reporting unit, which has goodwill of $51.6 million, exceeded its carrying value by approximately 54%. The qualitative analysis, in addition to the typical considerations discussed above, considered changes in the Company's expectations of future financial performance since the April 1, 2020, quantitative analysis and the previous qualitative analyses through April 1, 2023, performed for TNMP. The April 1, 2020, quantitative evaluations indicated the fair value of the TNMP reporting unit, which has goodwill of $226.7 million, exceeded its carrying value by approximately 38%. This analysis considered events specific to TNMP such as the potential impacts of legal and regulatory matters discussed in Note 11 and Note 12. Based on an evaluation of these and other factors, the Company determined it was not more likely than not that the April 1, 2024, carrying values of PNM and TNMP exceeded their fair value. Since the April 1, 2024 annual evaluation, there have been no events, including the Merger, or indications that the fair values of the reporting units with recorded goodwill have decreased below their carrying values.

Table of Contents

**TXNM ENERGY, INC. AND SUBSIDIARIES**
**PUBLIC SERVICE COMPANY OF NEW MEXICO AND SUBSIDIARIES**
**TEXAS-NEW MEXICO POWER COMPANY AND SUBSIDIARIES**

**NOTES TO CONDENSED CONSOLIDATED FINANCIAL STATEMENTS**
(Unaudited)

**(17) Merger**

On May 18, 2025, TXNM, Parent, and Merger Sub, entered into the Merger Agreement, pursuant to which Merger Sub will merge with and into TXNM, with TXNM surviving the Merger as a direct wholly-owned subsidiary of Parent. Parent and Merger Sub are affiliates of Blackstone Infrastructure.

Pursuant to the Merger Agreement, each issued and outstanding share of the common stock of TXNM (other than (i) the issued shares of TXNM common stock that are owned by TXNM, Parent, Merger Sub, or any other wholly-owned subsidiaries of Parent or TXNM, in each case, not held on behalf of third parties, which will be automatically cancelled at the Effective Time and (ii) shares of TXNM common stock outstanding immediately prior to the Effective Time and held by a holder who has not voted in favor of, or consented in writing to, the Merger who is entitled to, and who has demanded, payment for fair value of such shares in accordance with applicable New Mexico law) will, at the Effective Time, be converted into the right to receive $61.25 in cash, without interest.

The proposed Merger has been unanimously approved by the Board, and it was approved by a majority of the holders of outstanding shares of TXNM common stock, as of the applicable record date, at the special meeting held on August 28, 2025. On January 13, 2026, the waiting period under the HSR Act in connection with the Merger expired and on January 23, 2026, the FCC consented to the two transfers of control applications submitted by Parent and TXNM, including amendments to the applications to include additional FCC licenses that TXNM had obtained since the original application was filed. TXNM will continue to amend the transfer of control application filed with the FCC, or file a new application, for any new FCC licenses either acquired by TXNM, or its subsidiaries, from third parties or through spectrum assignment filed with the FCC. Consummation of the Merger is subject to the satisfaction or waiver of certain customary conditions, including the absence of any material adverse effect on TXNM, the absence of legal prohibition on the consummation of the Merger (a "Legal Restraint"), and absence of any agreement between Parent or TXNM and the FCC or Antitrust Division of the U.S. Department of Justice prohibiting the Merger, and the receipt of certain required regulatory approvals (including NMPRC and NRC). The Merger Agreement does not contain any financing condition. On August 25, 2025, TXNM filed applications for regulatory approvals to the NMPRC, PUCT, and FERC (Note 12). On February 6, 2026, the PUCT approved a unanimous settlement agreement filed by parties to the merger proceeding filed in December and on February 20, 2026, the FERC approved the proposed Merger. On April 24, 2026, TXNM filed its application for regulatory approval of the proposed Merger with the NRC.

The Merger Agreement may be terminated by each of TXNM and Parent under certain circumstances, including if the Merger is not consummated by the 15-month anniversary of the execution of the Merger Agreement (as extended, the "End Date"), so long as failure of the Merger to consummate on or before the End Date was not due to the breach of the Merger Agreement by such party, subject to an automatic extension of the End Date until December 31, 2026 and an additional three-month extension by mutual agreement of the parties, in each case if all of the conditions to the closing, other than the conditions related to obtaining regulatory approvals or the absence of a Legal Restraint, have been satisfied or waived. The Merger Agreement also provides for other customary termination rights for both Parent and TXNM. The Merger Agreement further provides that, upon termination of the Merger Agreement under certain specified circumstances, TXNM will be required to pay Parent a termination fee of $210.0 million plus certain costs and expenses. In addition, the Merger Agreement provides that (i) if the Merger Agreement is terminated by either party as a result of a Legal Restraint (solely in connection with required regulatory approvals), (ii) if the Merger Agreement is terminated by either party as a result of the Merger not being consummated by the End Date, (iii) the Merger Agreement is terminated by TXNM as a result of a breach of any representation or warranty or failure to perform by Parent, or Merger Sub that is not curable or timely cured or (iv) Parent fails to effect the closing when all closing conditions (other than those that by their nature are to be satisfied at closing) have been satisfied or waived and it is otherwise obligated to do so under the Merger Agreement and it further fails to consummate the closing within two business days after receiving notice from TXNM, then, in any such case, upon termination of the Merger Agreement, Parent will be required to pay TXNM a termination fee of $350.0 million (subject to the terms of the Waiver defined and described below) plus certain costs and expenses (the "Parent Termination Fee").

On July 17, 2026, TXNM, Parent and Merger Sub entered into a Waiver (the "Waiver") pursuant to Section 8.6 of the Merger Agreement. Pursuant to the Waiver, each of Parent and TXNM irrevocably waived its right to terminate the Merger Agreement and abandon the Merger pursuant to Section 8.1(c) of the Merger Agreement (relating to the failure of the Merger to occur by the End Date (as defined in the Merger Agreement)) prior to May 31, 2027 (such period, the "Waiver Period"). Each party further waived any right or claim to interpret the terms of the Merger Agreement, including references to the End Date, in a manner inconsistent with the Waiver Period. In addition, TXNM irrevocably waived $175.0 million of the $350.0 million Parent Termination Fee, such that the Parent Termination Fee, if and when payable, would be reduced to $175 million. This reduction does not affect certain cost and expense reimbursement or indemnification obligations of the parties under specified

Table of Contents

**TXNM ENERGY, INC. AND SUBSIDIARIES**
**PUBLIC SERVICE COMPANY OF NEW MEXICO AND SUBSIDIARIES**
**TEXAS-NEW MEXICO POWER COMPANY AND SUBSIDIARIES**

**NOTES TO CONDENSED CONSOLIDATED FINANCIAL STATEMENTS**
(Unaudited)

provisions of the Merger Agreement relating to access to information, debt financing cooperation, effect of termination, and expenses.

Parent and Merger Sub have obtained equity and debt financing commitments for the transactions contemplated by the Merger Agreement. Pursuant to an equity commitment letter dated May 18, 2025 (the "Equity Commitment Letter"), Blackstone Infrastructure committed to provide Parent, at the consummation of the Merger, with an equity contribution in the amount set forth therein. In addition, pursuant to debt commitment letters ("Debt Commitment Letters") delivered to Merger Sub, Royal Bank of Canada, MUFG Bank, Ltd., BNP Paribas, Sumitomo Mitsui Banking Corporation and Canadian Imperial Bank of Commerce, New York Branch have agreed to provide debt financing to Merger Sub following the Closing on the terms and subject to the conditions set forth therein. The equity financing, when funded in accordance with the Equity Commitment Letter together with the debt financing when funded in accordance with the Debt Commitment Letters, will provide an amount that is sufficient to fund the (i) payment of the aggregate per share merger consideration, (ii) repayment, prepayment or discharge of certain obligations of the Company and its subsidiaries that would become due (after giving effect to the Merger) and are intended to be repaid at Closing and (iii) payment of all fees and expenses expected to be incurred at Closing in connection therewith. Additionally, following Closing, Parent and TXNM will have sufficient funds to repay, prepay or discharge certain other debt obligations of TXNM. In addition, Blackstone Infrastructure has executed and delivered a limited guarantee in favor of TXNM (the "Limited Guarantee"), pursuant to which Blackstone Infrastructure has guaranteed the obligations of Parent and Merger Sub to pay the Parent Termination Fee and certain other fees and expenses under the Merger Agreement. The Limited Guarantee is capped at $375.0 million.

Upon consummation of the Merger, the outstanding shares of TXNM common stock will be delisted from the New York Stock Exchange and deregistered under the Exchange Act.

Table of Contents

## ITEM 2. MANAGEMENT'S DISCUSSION AND ANALYSIS OF FINANCIAL CONDITION AND RESULTS OF OPERATIONS

The following Management's Discussion and Analysis of Financial Condition and Results of Operations for TXNM is presented on a combined basis, including certain information applicable to PNM and TNMP. The MD&A for PNM and TNMP is presented as permitted by Form 10-Q General Instruction H(2). This report uses the term "Company" when discussing matters of common applicability to TXNM, PNM, and TNMP. A reference to a "Note" in this Item 2 refers to the accompanying Notes to Condensed Consolidated Financial Statements (Unaudited) included in Item 1, unless otherwise specified. Certain of the tables below may not appear visually accurate due to rounding.

### *MD&A FOR TXNM*

### EXECUTIVE SUMMARY

#### Overview

TXNM is a holding company with two regulated electric utilities, PNM and TNMP, serving approximately 846,000 residential, commercial, and industrial customers in New Mexico and Texas. TXNM strives to create a clean and bright energy future for customers, communities, and shareholders. TXNM's strategy and decision-making are focused on safely providing reliable, affordable, and environmentally responsible power built on a foundation of sustainability.

#### *Recent Developments*

*Merger*

On May 18, 2025, TXNM, Parent, and Merger Sub (both Parent and Merger Sub are affiliates of Blackstone Infrastructure) entered into the Merger Agreement pursuant to which Merger Sub will merge with and into TXNM, with TXNM surviving the Merger as a direct, wholly-owned subsidiary of Parent. Pursuant to the Merger Agreement, each issued and outstanding share of the common stock of TXNM (other than those listed in Note 17) at the Effective Time will be converted into the right to receive $61.25 in cash, without interest.

The proposed Merger has been unanimously approved by the Board and was approved by the TXNM shareholders at a special meeting held on August 28, 2025. The waiting period under the HSR Act in connection with the Merger has expired without any objections or concerns having been raised, both the FCC and FERC approved the application, and the PUCT approved the unanimous settlement, satisfying four of the conditions to closing of the Merger Agreement. Consummation of the Merger remains subject to the satisfaction or waiver of certain customary conditions, including, without limitation, no Legal Restraint, and the receipt of certain required regulatory approvals (including the NMPRC and the NRC). TXNM has filed applications for regulatory approval of the Merger with the NMPRC (Note 12) and NRC. The Merger Agreement does not contain any financing condition and is currently expected to close in the first half of 2027.

On December 11, 2025, TXNM and Blackstone Infrastructure reached a unanimous settlement with parties in the Merger proceeding filed with the PUCT, that was approved on February 6, 2026. On February 20, 2026, FERC approved the proposed Merger rejecting claims related to data centers, private equity ownership, and speculative cross-subsidization relying on existing state ring-fencing protections in New Mexico and Texas. See Note 12.

#### *Vision, Values, and Business Objectives*

TXNM's vision is to create a clean and bright energy future while fulfilling its purpose to work together with customers and communities to meet their energy needs. TXNM's core values of Safety, Caring, and Integrity are the foundation for the Company's business objectives focused on safety excellence and customer satisfaction, including reliability.

To reach these objectives, the Company is committed to:

- Preparing our workforce with the knowledge and skills to thrive in a customer-focused world
- Purposefully delivering an intentional customer experience that exceeds our evolving customer and stakeholder expectations
- Enabling an environmentally sustainable future and deploying technologically advanced solutions that empower and benefit customers
- Demonstrating the relationship between customer excellence and our dedicated focus on financial strength

Meeting the business objectives above will drive key financial results:

- Earning authorized returns on regulated businesses

Table of Contents

- Delivering long-term earnings growth, with a dividend payout ratio between 50 and 60 percent of earnings
- Maintaining investment grade credit ratings

***Business Focus***

To achieve the Company's business objectives, focus is directed in key areas: Safe, Reliable and Affordable Power; Utility Plant Investments; Superior Customer Experience; Environmentally Responsible Power; and Stakeholder and Community Engagement. The Company works closely with its stakeholders to ensure that resource plans and infrastructure investments benefit from robust public dialogue and balance the diverse needs of our communities. Equally important is the focus of TXNM's utilities on customer satisfaction and community engagement.

*Safe, Reliable, and Affordable Power*

Safety is the first priority of our business and a core value of the Company. TXNM utilizes a Safety Management System to provide clear direction, objectives and targets for managing safety performance and minimizing risks and empowers employees to "Be the Reason Everyone Goes Home Safe".

TXNM measures reliability and benchmark performance of PNM and TNMP against other utilities using industry-standard metrics, including System Average Interruption Duration Index ("SAIDI") and System Average Interruption Frequency Index ("SAIFI"). PNM's and TNMP's investment plans include projects designed to support reliability and reduce the amount of time customers are without power.

TXNM and its utilities are aware of the important roles they play in enhancing economic vitality in their service territories. Management believes that maintaining strong and modern electric infrastructure is critical to ensuring reliability and supporting economic growth. When contemplating expanding or relocating their operations, businesses consider energy affordability and reliability to be important factors. PNM and TNMP strive to balance service affordability with infrastructure investment to maintain a high level of electric reliability and to deliver a safe and superior customer experience. Investing in PNM's and TNMP's infrastructure is critical to ensuring reliability and meeting future energy needs. Both utilities have long-established records of providing customers with safe and reliable electric service.

PNM participates in the EIM, a real-time wholesale energy trading market operated by the CAISO, that enables participating electric utilities to buy and sell energy. The EIM aggregates the variability of electricity generation and load for multiple balancing authority areas and utility jurisdictions. PNM passes the cost savings achieved by participating in the EIM through to customers under PNM's FPPAC. PNM also plans to join the EDAM, which is a voluntary day-ahead regional market that expands on CAISO's EIM market, as early as 2027.

*Utility Plant Investments*

During the 2024 and 2025 periods, PNM and TNMP together invested $2.4 billion in utility plant, including transmission and distribution systems, substations, power plants, and nuclear fuel. Investment plans emphasize new investments in transmission and distribution infrastructure to support growing demand with grid reliability and resilience and to deliver clean energy. The Company has been improving the diversification of its rate base among regulatory jurisdictions, moving TNMP and FERC transmission rate base to over half of the consolidated rate base.

Investments at TNMP support the continued high growth across each region of its service territory. Economic growth across Texas continues to push the demands on TNMP's system to new levels, including a new system peak in July 2026. In 2023, the Texas legislature passed a series of bills aimed at encouraging investments to enhance grid reliability and resilience, while the PUCT continues to develop rules in support of new legislation. TNMP will continue to submit filings for recovery of its investments, in accordance with these new rules, in addition to the existing rate recovery mechanisms. See the subheading under State Regulation and Legislation below.

Investments at PNM are aimed at supporting economic development and advancing the infrastructure beyond its original architecture to a more flexible and redundant system accommodating growing amounts of intermittent and distributed generation resources and integrating evolving technologies that provide long-term customer value. New Mexico's clean energy future depends on a reliable, resilient, secure grid to deliver an evolving mix of energy resources to customers. More recently, the 2029-2032 Resource portfolio application filed with the NMPRC is an integrated package of resources designed to ensure that PNM continues to provide safe, reliable, and cost-effective electric service while meeting anticipated load growth, including a new system peak in July 2026, and supporting the clean energy transition under New Mexico's ETA. In addition, the CCN requesting approval of a new transmission line and the recent approval received to defer costs of two economic development projects filed under SB 170 support economic development in New Mexico. Similarly, projects included in the Grid Modernization Plan will improve customers' ability to customize their use of energy and modernize PNM's electric grid through infrastructure and technology improvements.

Table of Contents

See the subheading Capital Requirements included in the full discussion of Liquidity and Capital Resources below for additional discussion of the Company's projected capital requirements.

*Superior Customer Experience*

The Company strives to deliver a superior customer experience and includes customer satisfaction as a key performance metric. As a transmission and distribution service provider in Texas' deregulated market, reliability is core to the customer experience and TNMP continues to focus on keeping end-users updated about interruptions and encouraging consumer preparation when severe weather is forecasted. In 2024, TNMP made significant strides in improving customer satisfaction related to power outages by providing a more user-friendly experience on TNMP's outage map information system, making it easier for customers to access real-time outage information. In addition, TNMP introduced a new system that allows customers to receive outage alerts through multiple communication channels to enhance transparency and to ensure customers stay informed during outages. During the most recent winter storm, TNMP sent employees to assist in expanded vegetation support, helping crews address tree-related outages in remote or difficult-to-access areas and restoring power to those communities. In April 2026, TNMP was announced as an Emergency Response Award recipient by EEI. The Emergency Response Awards recognize recovery and assistance efforts of electric companies following service disruptions caused by extreme weather or other natural events.

PNM, as a vertically integrated utility in New Mexico, is focused on providing customers reliable, affordable and clean energy. PNM holds in-person engagements with residential and business customers through customer advisory councils to receive feedback on the programs and services offered. Additionally, PNM continues to focus its efforts on customer service improvements, including enhanced digital payment options, strategic customer outreach, and improved communications. To supplement its service, PNM has implemented programs regulated by the NMPRC to incentivize customers to address these issues through rebates and/or discounts, including Energy Efficiency, Transportation Electrification, Community Solar, and Time-of-Day pilot Programs. Increased incentives are provided to low-income customers to further encourage participation from households typically experiencing a higher energy burden. Additionally, PNM offers customer bill payment assistance through PNM Good Neighbor Fund and accepts employee and customer donations to supplement this fund. As a result of PNM's efforts, 2,608 families in need received emergency assistance through the PNM Good Neighbor Fund for the six months ended June 30, 2026.

While the electric utility industry continues to experience declines in customer satisfaction, as measured by J.D. Power, PNM's ranking in 2025 remained stable, reflecting the Company's sustained efforts to improve the customer journey through a more seamless and customer-friendly experience. In early 2026, PNM refreshed its outage communications to push out more timely, transparent and customer-friendly information when a customer experiences a power outage. These communications were implemented for all customers with available contact information and follow a bill redesign implemented in 2025 to improve transparency and usability. Additional improvements are planned as a part of PNM's approved Grid Modernization Plan.

PNM has also increased engagement in communities with inherent high fire risk, including enrollment in outage alerts, a series of town hall panel discussions with local community officials, newsletters and other mailings. In 2026, these efforts highlight a Public Safety Power Shutoff Alert System with varying status levels, similar to those for other emergencies (hurricanes, tornadoes, etc.) to provide customers with the necessary information to prepare for potential power outages as a last resort when extreme wildfire risks are present on our system.

*Environmentally Responsible Power*

TXNM has a long-standing record of environmental stewardship. PNM's environmental focus is in three key areas:

- Developing strategies to provide reliable and affordable power while transitioning to a 100% carbon-free generating portfolio by 2040
- Preparing PNM's system to meet New Mexico's increasing renewable energy requirements as cost-effectively as possible
- Increasing energy efficiency participation

TXNM's corporate website (www.txnmenergy.com) includes a dedicated section providing key environmental and other information related to PNM's and TNMP's operations, including information that collectively demonstrates the Company's commitment to sustainability. This information highlights plans for PNM to be coal-free no later than 2031 and to achieve a carbon-free generating portfolio by 2040. Achieving our goal of carbon-free by 2040 is dependent on balancing reliability, cost considerations, and maturity of emerging technologies.

PNM's Grid Modernization Plan is a major step forward in providing reliable, affordable and sustainable energy. As part of that plan, PNM will promote energy equity by installing technology like smart meters and making distribution upgrades in low-income areas first in order to allow lower-income customers to gain insights into their energy usage to improve

Table of Contents

affordability and create fairer access to energy. In addition, PNM's Time-of-Day pilot incentivizes customers, through price signals, to use energy during the day when renewable generation is abundant.

The IRA provided benefits for TXNM and its customers by extending and enhancing clean energy incentives such as the investment tax credit and production tax credit. As the Company continues its transition away from carbon emitting sources, these credits may have reduced the cost of renewable investments. In addition, the IRA included a production tax credit for existing nuclear facilities that created an added benefit for PNM's ownership in the carbon-free PVNGS. Other IRA provisions encouraged transportation electrification with EV credits and incentives for vehicle charging infrastructure. In July 2025, the OBBBA was enacted and it accelerated the phase-out of certain IRA energy tax credits and restricted the availability of credits for "foreign entities of concern", as such term is used in the OBBBA. As a result, TXNM anticipates potentially higher costs associated with any future renewable energy development but does not expect other aspects of the OBBBA to have a material impact on its financial statements.

*Electric Vehicles*

TXNM's sustainability goals include plans for additional emissions reductions through the electrification of its vehicle fleet. Growing the number of EVs within the Company's fleet will benefit the environment and lower fuel costs furthering the commitment to sustainability. Under the commitment, existing fleet vehicles will be replaced as they are retired with an increasing percentage of EVs.

To demonstrate TXNM's commitment to increase the electrification of vehicles in its service territory, PNM implemented its first TEP in 2022 and received approval of its 2024-2026 TEP in 2024. Since then, PNM has launched transportation electrification offerings that continue to support customer adoption of EVs by addressing barriers to adoption. PNM's TEP program budget provides financial support to residential and non-residential customers towards the purchase of EV chargers and/or site make-ready costs, as well as customer education and outreach on EV-specific electricity rates to encourage charging during off-peak periods. More than 25% of the program budget is dedicated to low- and moderate-income customers to plan for an equitable transition to an electrified transportation sector.

PNM participates in the National Electric Highway Coalition, which plans to build fast-charging ports along major U.S. travel corridors. The coalition, with approximately 50 investor-owned electric companies, is committed to providing EV fast charging ports that will allow the public to drive EVs with confidence throughout the country's major roadways. To support this initiative, PNM's TEP program includes the installation of a charging network along major roadways in New Mexico. PNM filed its 2027-2029 TEP with the NMPRC on June 1, 2026.

*Renewable Energy and Energy Storage*

PNM's utility-owned solar and energy storage capacity, as well as solar, energy storage, wind, and geothermal procurements from facilities in service as of June 30, 2026, have a total net generation capacity of 3,409 MW. In addition to PNM's owned and third-party contracted solar facilities, PNM also has a customer distributed solar generation program that represented 387.4 MW at June 30, 2026. The NMPRC has approved plans for PNM to procure energy and RECs from additional resources to serve retail customers and a data center located in PNM's service territory. PNM's approved resources have a generation capacity of 1,318 MW. This includes approximately 280 MW of additional capacity under the Community Solar Act which will provide customers an additional option of accessing solar energy.

PNM will continue to seek approval to procure renewable resources as needed to meet forecasted peak load requirements to serve its customers and New Mexico's RPS and carbon-free resource requirements, while balancing the impact to customers' electricity costs.

*Energy Efficiency*

Energy efficiency plays a significant role in helping to keep customers' electricity costs low while meeting their energy needs and is one of the Company's approaches to supporting environmentally responsible power. PNM's and TNMP's energy efficiency and load management portfolios continue to achieve robust results. In 2026, incremental energy saved as a result of participation in PNM's portfolio of energy efficiency programs is estimated to be 87 GWh. This is equivalent to the annual consumption of approximately 12,056 homes in PNM's service territory. PNM's load management and energy efficiency programs also help lower peak demand requirements. In 2026, TNMP's incremental energy saved as a result of participation in TNMP's energy efficiency programs is estimated to be approximately 17 GWh. This is equivalent to the annual consumption of approximately 2,392 homes in TNMP's service territory, estimated using a national average avoided emissions rate. TNMP's high-performance homes residential new construction energy efficiency program has earned the Energy Star Partner of the Year award for 8 years, including 6 years receiving the Sustained Excellence Award, recognizing long-term commitment to fighting climate change and protecting public health through energy efficiency. In April 2026, PNM filed an application with the NMPRC for its energy efficiency and load management programs to be offered in its 2027 Plan (Note 12). In May 2026, TNMP filed its annual request with the PUCT to adjust its EECRF for changes in costs for 2027 (Note 12).

Table of Contents

*Water Conservation and Solid Waste Reduction*

PNM continues to make progress in its efforts to reduce the amount of fresh water used to make electricity. Continued growth in PNM's solar and wind energy resources, energy efficiency programs, and innovative uses of air-cooling technology have contributed to this reduction. Water usage has continued to decline as PNM has substituted less fresh-water-intensive generation resources to replace SJGS. As the Company moves forward with its mission to achieve carbon-free generation, it expects that more significant water savings will be gained. Shutting down SJGS in 2022 and Four Corners in 2031 will allow the Company to reach our goals for reduced freshwater use at 80% by 2035 and 90% by 2040 from 2005 levels. Focusing on responsible stewardship of New Mexico's scarce water resources improves PNM's water-resilience in the face of persistent drought and ever-increasing demands for water to spur the growth of New Mexico's economy.

In addition to the above areas of focus, the Company is working to reduce the amount of solid waste going to landfills through increased recycling and reduction of waste. In 2025, 18 of the Company's 22 facilities met or exceeded the solid waste diversion goal of a 65% diversion rate.

*Stakeholder and Community Engagement*

The Company is committed to fostering relationships with its customers, stakeholders, and communities. Through outreach, collaboration, and various community-oriented programs, the Company has demonstrated a commitment to building productive relationships with stakeholders, including customers, community partners, regulators, intervenors, legislators, and shareholders. Local relationships and one-on-one communications remain two of the most valuable ways both PNM and TNMP connect with their stakeholders. Both companies maintain long-standing relationships with governmental representatives and key electricity consumers to ensure that these stakeholders are updated on Company investments and initiatives. Key electricity consumers also have dedicated Company contacts that support their important service needs.

The Company utilizes a number of communications channels and strategic content to serve and engage its many stakeholders. PNM's website provides the details of major regulatory filings, including general rate requests, as well as the background on PNM's efforts to maintain reliability, keep prices affordable, and protect the environment. The website is also a resource for information about PNM's operations and community outreach efforts to customers on various topics such as education, outage alerts, safety, wildfire safety, customer service, community partnerships in philanthropic projects, and plans for building a sustainable energy future for New Mexico and to transition to a carbon-free generating portfolio. PNM also leverages social media to communicate about some of these topics with certain customers. TNMP's website provides information on customized energy efficiency programs and TNMP rates, in addition to other community outreach information. As discussed above, TXNM's corporate website includes a dedicated section providing additional information regarding the Company's commitment to sustainability.

In July 2026, PUCT adopted a rule requiring utilities that own or operate power transmission or distribution facilities in wildfire risk areas, as defined by the Texas Division of Emergency Management to prepare and submit a wildfire mitigation plan ("WMP") for approval. TNMP has filed a notice of intent to prepare and submit its WMP for approval on or before September 30, 2026.

Throughout 2025, PNM held in-person community events focused on wildfire safety and educating customers about the PSPS process and wildfire mitigation efforts to protect the public. These gatherings are designed to share critical information, coordinate with local resources, and listen to feedback from local communities. PNM hosted four events in High Fire Risk Areas ("HFRA") across New Mexico in 2025 and expects to host similar events in 2026. In addition, PNM included local emergency managers in its periodic meetings referred to as "wildfire tabletops" in 2025. Each of these engagements builds and strengthens our preparedness as a Company for wildfire prevention and response.

TXNM has a long tradition of supporting the communities that it serves in New Mexico and Texas. During the three years ended December 31, 2025, TXNM, through corporate giving, contributed $8.7 million to civic, educational, environmental, tribal, low income, and economic development organizations. Additionally, the PNM Resources Foundation (the "Foundation") has provided an annual average of $1.2 million in grant funding over the past three years across New Mexico and Texas. Throughout 2025, the Foundation focused on grants for wellness and athletic activities within the community and grants for the environment. These grants help nonprofits innovate or sustain programs to grow and develop their missions, develop and implement environmental programs, and provide educational opportunities. The Foundation continues to expand its matching and volunteer grant programs and the annual amount of matching donations available to each of its employees. The Foundation has also approved an increase to the amount awarded to employees through the employee crisis management fund, which provides our employees with financial support for basic living needs during catastrophic emergencies and times of crises. The Company collaborated with community foundations to help support the effort and direct funds where they were most needed for those who have been affected by the wildfires, floods and hurricanes in surrounding communities in addition to supporting law enforcement and first responders.

Table of Contents

TXNM recognizes its responsibility to support programs and organizations that enrich the quality of life across its service territories and seeks opportunities to further demonstrate its commitment in these areas as needs arise. In response to community needs, TXNM partners with other corporate funders to support nonprofits and small businesses. TXNM also collaborates on community projects, low-income customer assistance programs, and employee volunteerism.

PNM stands out as one of the few investor-owned utilities operating a tribal relations office, which is focused on serving and collaborating with 18 of the 23 sovereign nations in New Mexico and the Southwest. PNM created the Navajo Nation Workforce Training Scholarship Program to provide support for Navajo tribal members and to encourage the pursuit of education and training in existing and emerging jobs in the communities in which they live. PNM has invested in paid summer college engineering internship programs for American Indian students in the greater Albuquerque area, established the PNM Pueblo Education Scholarship and Endowment to invest in higher education for Native American Indian students, and supported the development of an entrepreneur complex located in Albuquerque and operated by the Indian Pueblo Cultural Center. PNM continues to partner with the Navajo Nation in the Light Up Navajo project, piloted in 2019 and modeled as a mutual aid project to connect Navajo homes without electricity to the power grid. PNM is one of 44 utilities across 16 states to participate in improving the quality of life for families by bringing electricity to over 1,000 homes since inception of the project. PNM has also partnered with New Mexico universities to enhance intern programs and developed a business coalition model to drive economic development through intern partnerships.

Employee volunteers are the lifeblood of a healthy corporate culture. Community giving through volunteers' time and effort is at the heart of employee engagement. Throughout 2025, the Company held large-scale volunteer events, working alongside nonprofits, schools, and vulnerable communities throughout New Mexico and Texas. More than 640 employees in both states participated in the annual "Day of Service," a workday event encouraging employee volunteerism and serving more than 40 organizations. Throughout the year, employees volunteer their time generously through independent volunteer activities and board participation. Employees strengthen community resilience by giving more than 4,000 volunteer hours each year to support the health, safety, and well-being of diverse communities.

***Financial Focus***

*Earning Authorized Returns on Regulated Businesses*

TXNM's success in accomplishing its financial objectives is highly dependent on two key factors: fair and timely regulatory treatment for its utilities and the utilities' strong operating performance. The Company has multiple strategies to achieve favorable regulatory treatment, all of which have as their foundation a focus on the basics: safety, operational excellence, and customer satisfaction, while engaging stakeholders to build productive relationships. Both PNM and TNMP seek cost recovery for their investments through general rate cases, periodic cost of service filings, and various rate riders. The rates PNM and TNMP charge customers are subject to traditional rate regulation by the NMPRC, FERC, and the PUCT. Additional information about rate filings is provided in Note 17 of the Notes to Consolidated Financial Statements in the 2025 Annual Reports on Form 10-K.

Fair and timely rate treatment from regulators is crucial to PNM and TNMP in earning their allowed returns and critical for TXNM to achieve its financial objectives. TXNM believes that earning allowed returns is viewed positively by credit rating agencies and that improvements in the Company's ratings could lower costs for utility customers.

*State Regulation and Legislation*

TNMP

In the 2023 and 2025 Texas Legislative sessions several bills were passed to support utility reliability and resiliency by encouraging and protecting utility infrastructure investments. Under the new legislation, TNMP filed its 2025-2027 SRP in August 2024 and filed an unopposed settlement with the PUCT in December 2024 that was approved with slight modifications in March 2025. Other bills directed ERCOT to develop reliability plans for the Permian Basin which resulted in the need for additional investments in the West Texas service territory and to establish standards for interconnecting large load customers in the region. In 2025, HB 5247 was passed, which immediately authorized certain utilities, including TNMP, to offset depreciation, property tax expenses, and carrying costs with alternative revenue and recognize a regulatory asset for qualifying investments that are not currently reflected in rates, until the following year in which they would file a single, annual proceeding with the PUCT. In February 2026, PUCT adopted a rule to ensure the power demands of large load customers of 75 MW or more, be incorporated into ERCOT's Regional Transmission Plan and resource adequacy assessments. These pieces of legislation demonstrate that Texas continues to encourage utility investment and prioritizes timely rate recovery. TNMP will look to prioritize investments aligned with these measures that improve the quality of service for current and future customers and anticipates submitting annual filings in accordance with the rule.

Beyond legislative actions, the regulatory framework in Texas strongly encourages investments into the grid by providing timely recovery through rate mechanisms outside of general rate cases. The PUCT has approved mechanisms that allow TNMP to recover capital invested in transmission and distribution projects without having to file a general rate case. The

Table of Contents

PUCT also approved rate riders that allow TNMP to recover amounts related to energy efficiency and third-party transmission costs. TNMP also has approximately 285,000 advanced meters across its service territory, the costs of which are being recovered through base rates.

*TNMP Base Rate Review*

In November 2025, TNMP filed the TNMP Base Rate Review with the PUCT, requesting recovery of $2.8 billion of rate base, a requested ROE of 10.4%, and a 47.54% equity ratio. The TNMP Base Rate Review also includes increases in operations and maintenance expenses that are not recovered through semi-annual TCOS and DCRF filings, excludes increases in interest expense resulting from refinancing of debt associated with the proposed Merger, and requests recovery of $20.5 million associated with Hurricane Beryl restoration costs over a five-year period. If approved by the PUCT, the new rates are expected to become effective in mid-2026. On May 29, 2026, TNMP filed an unopposed stipulation and settlement agreement with the PUCT that was approved in a Final Order issued on July 30, 2026. See Note 12.

PNM

The 2025 New Mexico Legislative session included several bills that were passed to support economic development, clean energy, grid modernization, and wildfire preparedness. Among the bills passed were companion bills: New Mexico Senate Bill 169 (the "Site Readiness Bill") and New Mexico Senate Bill 170 (the "Power Readiness Bill").

The Site Readiness Bill creates a dedicated funding mechanism and a structured process for identifying, assessing, and preparing strategic economic development sites across the state, designed to position New Mexico to compete with other states actively investing in site readiness. It appropriates approximately $24 million for the site readiness fund for site-characterization studies of proposed economic development sites and site preparations of strategic economic development sites. The Site Readiness Bill also creates the Strategic Economic Development Site Advisory Committee to advise the New Mexico Economic Development Department ("NMEDD") in selecting sites and awarding funding.

The Power Readiness Bill is intended to reduce risk, lead times, and regulatory uncertainty in acquiring additional generation resources and in building large-scale infrastructure needed to competitively serve economic development customers that create jobs. It allows a public utility to annually increase generation capacity by up to 10% of the public utility's total system peak load. The Power Readiness Bill also shortens the time for regulatory approval of CCN filings for new, major infrastructure and allows a public utility to defer costs of economic development projects, placing them into a regulatory asset until a customer signs a contract or begins taking service. In March 2026, PNM received approval to defer costs of two economic development projects under the Power Readiness Bill; the Westpointe and Mesa Del Sol Substations (See Note 12).

*The New Mexico Energy Transition Act ("ETA")*

The passage of the ETA amended the REA to require utilities operating in New Mexico to have renewable portfolios equal to 50% by 2030, 80% by 2040, and 100% zero-carbon energy by 2045. Those amendments also allow for the recovery of undepreciated investments and decommissioning costs related to qualifying EGUs that the NMPRC has required be removed from retail jurisdictional rates, provided replacement resources to be included in retail rates have lower or zero-carbon emissions. The ETA provides for a transition from fossil-fueled generating resources to renewable and other carbon-free resources by allowing utilities to issue Securitized Bonds related to the retirement of certain coal-fired generating facilities to qualified investors. See additional discussion of the ETA in Notes 16 and 17 of the Notes to Consolidated Financial Statements in the 2025 Annual Reports on Form 10-K and the issuance of the ETBC I Securitized Bonds in Note 7 of the Notes to Consolidated Financial Statements in the 2025 Annual Reports on Form 10-K.

*Grid Modernization Plan*

In October 2024, the NMPRC approved PNM's Grid Modernization Plan which will improve customers' ability to customize their use of energy and benefit from the electricity grid consistent with the Grid Modernization Statute. PNM's plan to modernize its electricity grid through infrastructure and technology improvements includes installing technology like smart meters and making distribution upgrades in low-income areas first in order to allow lower-income customers to gain insights into their energy usage to improve affordability and create fairer access to energy. The approved plan includes grid modernization investments of approximately $344 million for the first six years of a broader 11-year strategy. The approved rate rider will recover capital costs, operating expenses, and taxes associated with the investments included in the plan. In June 2025, the Grid Modernization Plan was updated to reflect an increase in investments from approximately $344 million to $367 million in the first six years and a decrease in projected operations and maintenance costs of approximately 18%. See Note 12.

*Integrated Resource Plan*

NMPRC rules require that investor-owned utilities file an IRP every three years. The IRP is required to cover a 20-year planning period and contain an action plan covering the first three years of that period. PNM's accepted 2023 IRP maintains a continued focus on a carbon-free energy system by 2040. The plan highlights the need for a significant sustained addition of

Table of Contents

resources over the next two decades, replacing retiring or expiring capacity and meeting concurrent load growth, while reducing the carbon intensity of PNM's portfolio.

In December 2024, PNM issued its 2029-2032 RFP for at least 900 MW of new energy resources to come online between 2029 and 2032, with at least 500 MW needed by 2030, and is anticipated to identify potential replacement resources for PNM's current natural gas generation capacity as well as PNM's ownership interest in Four Corners. In May 2026, PNM filed its 2029-2032 Resource Portfolio Application with the NMPRC, requesting 1,650 MW of new energy resources and its abandonment and exit of its ownership interest in Four Corners in 2031. See Note 12.

In the fourth quarter of 2025, PNM initiated its 2026 IRP process which will cover the 20-year planning period from 2026 through 2046. Consistent with historical practice, PNM is receiving public input from interested parties as part of this process. PNM expects to file its 2026 IRP with the NMPRC on or before September 1, 2026.

*PNM Rate Riders and other*

The NMPRC has approved PNM recovering fuel costs through the FPPAC, as well as rate riders for renewable energy, energy efficiency, Grid Modernization, and the TEP. These mechanisms allow for more timely recovery of investments.

*FERC Regulation*

Rates PNM charges wholesale transmission customers are subject to traditional rate regulation by FERC. Rates charged to wholesale electric transmission customers, other than customers on the Western Spirit Line, are based on a formula rate mechanism pursuant to which rates for wholesale transmission service are calculated annually in accordance with an approved formula. The formula includes updating cost of service components, including investment in plant and operating expenses, based on information contained in PNM's annual financial report filed with FERC, as well as including projected transmission capital projects to be placed into service in the following year. The projections included are subject to true-up. Certain items, including changes to return on equity and depreciation rates, require a separate filing to be made with FERC before being included in the formula rate.

*Delivering Long-Term Earnings Growth*

TXNM's financial objective to deliver long-term earnings growth, enables investors to realize the value of their investment in the Company's business. Earnings growth is based on ongoing earnings, which is a non-GAAP financial measure that excludes from GAAP earnings certain non-recurring, infrequent, and other items that are not indicative of fundamental changes in the earnings capacity of the Company's operations. TXNM uses ongoing earnings to evaluate the operations of the Company and to establish goals, including those used for certain aspects of incentive compensation, for management and employees.

TXNM targets a dividend payout ratio in the 50% to 60% range of its ongoing earnings. The Board will continue to evaluate the dividend on an annual basis, considering sustainability and growth, capital planning, and industry standards. The Board approved the following increases in the indicated annual common stock dividend:

| Approval Date | Percent Increase |
|---|---|
| December 2024 | 5.2% |
| December 2025 | 3.7% |

Under the terms of the Merger Agreement, TXNM has agreed not to declare, set aside, make or pay any dividend or other distribution, payable in cash, stock, property or otherwise, with respect to any of its equity securities, or make any other actual, constructive or deemed dividend or distribution in respect of any of its equity securities (except (i) TXNM may continue the declaration and payment of regular quarterly cash dividends on TXNM common stock for each quarterly period ending after the date of the Merger Agreement, in an amount not to exceed $0.4275 in 2026, with usual record and payment dates for such quarterly dividends in accordance with past dividend practice, (ii) for any cash dividend or cash distribution by a wholly-owned subsidiary of TXNM to TXNM or another wholly-owned subsidiary of TXNM, and (iii) a "stub period" dividend to holders of record of TXNM common stock as of immediately prior to the Effective Time equal to the product of (1) the number of days from the record date for payment of the last quarterly dividend paid by TXNM prior to the Effective Time, multiplied by (2) a daily dividend rate determined by dividing the amount of the last quarterly dividend paid prior to the Effective Time by ninety-one).

*Maintaining Investment Grade Credit Ratings*

The Company is committed to maintaining investment grade issuer credit ratings in order to reduce the cost of debt financing and to help ensure access to credit markets, when required. On January 15, 2024, S&P revised TXNM, PNM, and

Table of Contents

TNMP's outlook to stable from positive. See the subheading Liquidity included in the full discussion of Liquidity and Capital Resources below for the specific credit ratings for TXNM, PNM, and TNMP. All of the credit ratings issued by both Moody's and S&P on the Company's senior debt continue to be investment grade.

**Economic Factors**

*TNMP* – In the three and six months ended June 30, 2026, TNMP experienced an increase in volumetric weather normalized retail load of 4.3% and 1.4% compared to 2025. Weather normalized demand-based load, excluding retail transmission consumers, increased 5.8% and 4.5% in the three and six months ended June 30, 2026, compared to 2025. Data center load, including distribution and transmission, has decreased 24.6% and 21.4% in the three and six months ended June 30, 2026 compared to 2025.

*PNM* – In the three and six months ended June 30, 2026, PNM experienced an increase of 1.3% and a decrease of 0.8% in weather normalized residential load compared to 2025. Weather normalized commercial load increased 1.5% and decreased 0.7% in the three and six months ended June 30, 2026 compared to 2025. Industrial load increased 5.5% and 4.5% in the three and six months ended June 30, 2026 compared to 2025.

The Company is closely monitoring the impacts on the capital markets of various macroeconomic conditions, including actions by the Federal Reserve to address inflationary concerns or other market conditions, and geopolitical activity. The Company has not experienced, nor does it expect to experience significant negative impacts to customer usage at PNM and TNMP resulting from these economic impacts. However, if current economic conditions worsen, the Company may be required to implement additional measures such as reducing or delaying operating and maintenance expenses and planned capital expenditures.

**Results of Operations**

Net earnings attributable to TXNM were $75.0 million, or $0.67 per diluted share, in the six months ended June 30, 2026, compared to $30.5 million, or $0.32 per diluted share, in 2025. Among other things, earnings in the six months ended June 30, 2026, benefited from higher transmission and distribution rates at TNMP, impacts of revenues recorded under HB 5247 at TNMP, increased revenue at PNM approved in the 2025 Rate Change, and higher transmission margin at PNM. These increases were partially offset by higher operating expenses at PNM and TNMP, increased depreciation, property taxes, and interest expense at PNM and TNMP due to increased plant in service, capacity arrangements at PNM, milder weather at PNM and TNMP, and decreased performance of investment securities in the NDT and coal mine reclamation trusts at PNM. Additional information on factors impacting results of operations for each segment is discussed below under Results of Operations.

**Liquidity and Capital Resources**

As of June 30, 2026, TXNM, PNM, and TNMP had revolving credit facilities with capacities of $300.0 million, $440.0 million, and $300.0 million. Total availability for TXNM on a consolidated basis was $512.9 million at July 24, 2026. The Company utilizes the revolving credit facilities and notes outstanding under the commercial paper program that are backed by the revolving credit facilities, except the PNM New Mexico Credit Facility, and cash flows from operations to provide funds for both construction and operational expenditures. TXNM also has intercompany loan agreements with each of its subsidiaries.

TXNM projects that its consolidated capital requirements, consisting of construction expenditures and dividends, will total $11.1 billion for 2026 - 2030, including amounts expended through June 30, 2026. These construction expenditures may change due to incremental expenditures for new customer growth and other transmission and renewable energy expansion. TNMP's investments support continued high growth in system demand across TNMP's service territories and growing encouragement for infrastructure investments from the Texas legislature to support grid reliability and resilience. PNM's capital initiatives include investments in generation, transmission, and distribution infrastructure to deliver clean energy, support customer growth, enhance customer satisfaction, and increase grid resilience. Construction expenditures also include investments proposed in PNM's Grid Modernization Plan and TNMP's SRP.

To fund capital spending requirements to meet growth that balances earnings goals, credit metrics, and liquidity needs, the Company has entered into a number of other financing arrangements. A complete listing of outstanding financing arrangements is contained in Note 7 of the Notes to Consolidated Financial Statements in the 2025 Annual Reports on Form 10-K and details for current financing activity is contained in Note 9.

After considering the effects of these financings and the Company's short-term liquidity position as of July 24, 2026, the Company has consolidated maturities of long-term and short-term debt aggregating approximately $751.8 million through July 2027. In addition to internal cash generation, the Company anticipates that it will be necessary to obtain additional long-term financing in the form of debt refinancing, new debt issuances, and/or new equity, including those provided for under the Merger Agreement, in order to fund its capital requirements during the 2026-2030 period. The Company currently believes that

Table of Contents

its internal cash generation, existing credit arrangements, and access to public and private capital markets will provide sufficient resources to meet the Company's capital requirements for at least the next twelve months. As of June 30, 2026 and July 24, 2026, the Company was in compliance with its debt covenants.

## RESULTS OF OPERATIONS

The following discussion and analysis should be read in conjunction with the Condensed Consolidated Financial Statements and Notes thereto. Trends and contingencies of a material nature are discussed to the extent known. Refer also to Disclosure Regarding Forward Looking Statements and to Part II, Item 1A. Risk Factors.

A summary of net earnings attributable to TXNM is as follows:

| | Three Months Ended June 30, | | | Six Months Ended June 30, | | |
|---|---|---|---|---|---|---|
| | 2026 | 2025 | Change | 2026 | 2025 | Change |
| | (In millions, except per share amounts) | | | | | |
| Net earnings attributable to TXNM | $ 71.3 | $ 21.6 | $ 49.7 | $ 75.0 | $ 30.5 | $ 44.5 |
| Average diluted common and common equivalent shares | 111.2 | 96.2 | 15.0 | 112.1 | 94.6 | 17.5 |
| Net earnings attributable to TXNM per diluted share | $ 0.64 | $ 0.22 | $ 0.42 | $ 0.67 | $ 0.32 | $ 0.35 |

The components of the change in net earnings attributable to TXNM are:

| | Three Months Ended June 30, 2026 | Six Months Ended June 30, 2026 |
|---|---|---|
| | (In millions) | |
| TNMP | $ 18.9 | $ 27.3 |
| PNM | 21.4 | 4.6 |
| Corporate and Other | 9.4 | 12.6 |
| Net change | $ 49.7 | $ 44.5 |

Information regarding the factors impacting TXNM's operating results by segment are set forth below.

### Segment Information

The following discussion is based on the segment methodology that TXNM's management uses for making operating decisions and assessing performance of its various business activities. See Note 2 for more information on TXNM's operating segments.

### TNMP

#### Non-GAAP Financial Measures

TNMP defines utility margin as electric operating revenues less cost of energy, which consists of costs charged by third-party transmission providers. TNMP believes that utility margin provides a more meaningful basis for evaluating operations than electric operating revenues since all third-party transmission costs are passed on to consumers through a transmission cost recovery factor. Utility margin is not a financial measure required to be presented and is considered a non-GAAP measure. TNMP does not intend for utility margin to represent any financial measure as defined by GAAP; however, the calculation of utility margin, as presented, most closely compares to gross margin as defined by GAAP. Reconciliations between utility margin and gross margin are presented below.

| | Three Months Ended June 30, | | | Six Months Ended June 30, | | |
|---|---|---|---|---|---|---|
| | 2026 | 2025 | Change | 2026 | 2025 | Change |
| | (In millions) | | | | | |
| Gross margin | $ 93.9 | $ 75.1 | $ 18.8 | $ 178.9 | $ 141.4 | $ 37.5 |
| Transmission and distribution costs | 10.0 | 10.7 | (0.7) | 17.9 | 20.4 | (2.5) |
| Depreciation and amortization | 39.6 | 34.9 | 4.7 | 78.1 | 70.1 | 8.0 |
| Utility margin | $ 143.5 | $ 120.8 | $ 22.7 | $ 275.0 | $ 231.9 | $ 43.1 |

Table of Contents

The following table summarizes the operating results for TNMP:

| | Three Months Ended June 30, | | | Six Months Ended June 30, | | |
|---|---|---|---|---|---|---|
| | 2026 | 2025 | Change | 2026 | 2025 | Change |
| | (In millions) | | | | | |
| Electric operating revenues | $ 187.4 | $ 164.0 | $ 23.4 | $ 362.4 | $ 313.5 | $ 48.9 |
| Cost of energy | 44.0 | 43.3 | 0.7 | 87.4 | 81.5 | 5.9 |
| Utility margin | 143.5 | 120.8 | 22.7 | 275.0 | 231.9 | 43.1 |
| Operating expenses | 36.3 | 37.1 | (0.8) | 72.7 | 70.4 | 2.3 |
| Depreciation and amortization | 39.6 | 34.9 | 4.7 | 78.1 | 70.1 | 8.0 |
| Operating income | 67.6 | 48.7 | 18.9 | 124.2 | 91.4 | 32.8 |
| Other income | 4.4 | 1.7 | 2.7 | 7.6 | 4.1 | 3.5 |
| Interest charges | (22.0) | (23.9) | 1.9 | (43.4) | (41.3) | (2.1) |
| Segment earnings before income taxes | 50.0 | 26.4 | 23.6 | 88.4 | 54.3 | 34.1 |
| Income (taxes) | (10.0) | (5.5) | (4.5) | (17.8) | (11.0) | (6.8) |
| Segment earnings | $ 39.9 | $ 21.0 | $ 18.9 | $ 70.6 | $ 43.3 | $ 27.3 |

The following table shows total sales, including the impacts of weather, by retail tariff consumer class and average number of consumers:

| | Three Months Ended June 30, | | | Six Months Ended June 30, | | |
|---|---|---|---|---|---|---|
| | 2026 | 2025 | Percentage Change | 2026 | 2025 | Percentage Change |
| Volumetric load [1] (GWh) | | | | | | |
| Residential | 837.1 | 837.0 | — % | 1,490.8 | 1,546.2 | (3.6)% |
| Commercial and other | 12.5 | 11.5 | 8.7 | 24.8 | 23.6 | 5.1 |
| Total volumetric load | 849.6 | 848.5 | 0.1 % | 1,515.6 | 1,569.8 | (3.5)% |
| Demand-based load [2] (MW) | 8,872.2 | 9,435.8 | (6.0)% | 17,897.5 | 18,831.6 | (5.0)% |
| Average retail consumers (thousands) [3] | 285.5 | 281.4 | 1.5 % | 285.0 | 280.9 | 1.5 % |

[1] Volumetric load consumers are billed on KWh usage.
[2] Demand-based load includes consumers billed on monthly KW peak and also includes retail transmission customers that are primarily billed under rate riders.
[3] TNMP provides transmission and distribution services to REPs that provide electric service to customers in TNMP's service territories. The number of consumers above represents the customers of these REPs. Under TECA, consumers in Texas have the ability to choose any REP to provide energy.

*Operating Results – Three Months Ended June 30, 2026, compared to 2025*

The following table summarizes the significant changes to gross margin:

| | Three Months Ended June 30, 2026 Change |
|---|---|
| *Gross margin:* | (In millions) |
| Utility margin (see below) | $ 22.7 |
| Depreciation and amortization (see below) | (4.7) |
| Lower vegetation management and outside services expense, partially offset by higher employee related expense, excluding administrative costs | 0.7 |
| Other | 0.1 |
| Net Change | $ 18.8 |

Table of Contents

The following table summarizes the significant changes to utility margin:

| | Three Months Ended June 30, 2026 Change |
|---|---|
| *Utility margin:* | (In millions) |
| *Transmission rate relief/load* – Transmission cost of service rate increase in September 2025 and a decrease in ERCOT approved demand in May 2025 | $ 4.2 |
| *Distribution rate relief* – Distribution cost of service rate increases in June 2025 and December 2025 | 6.0 |
| *Volumetric-based consumer usage/load* – Weather normalized KWh sales increased 4.3%; the average number of volumetric consumers increased 1.5% | 1.2 |
| *Demand-based consumer usage/load* – Weather normalized demand-based MW sales for large commercial and industrial consumers excluding retail transmission consumers increased 5.8% | 1.8 |
| *Weather* – Milder weather in the second quarter of 2026 | (1.1) |
| *Rate relief* - Increase in revenue due to interim base rates pending final order Note 12 | 1.6 |
| Impacts of revenues recorded under HB 5247 Note 12 | 10.9 |
| Decrease in deferral of excess deferred income tax benefits refunded through base rates | (0.3) |
| *Rate Riders and other* – Includes transmission cost recovery factor and energy efficiency rider which are partially offset in operating expenses | (1.6) |
| Net Change | $ 22.7 |

The following tables summarize the primary drivers for changes in operating expenses, depreciation and amortization, other income (deductions), interest charges, and income taxes:

| | Three Months Ended June 30, 2026 Change |
|---|---|
| *Operating expenses:* | (In millions) |
| Lower employee related, outside services and vegetation management expense | $ (2.4) |
| Lower capitalization of administrative and general expenses due to lower construction expenditures | 0.8 |
| Higher allocated depreciation and amortization expense from Corporate and Other | 0.3 |
| Higher property tax due to increased utility plant in service | 1.0 |
| Other | (0.5) |
| Net Change | $ (0.8) |

| | |
|---|---|
| *Depreciation and amortization:* | |
| Increased utility plant in service | $ 4.5 |
| Other | 0.2 |
| Net Change | $ 4.7 |

| | |
|---|---|
| *Other income (deductions):* | |
| Higher CIAC | $ 0.8 |
| Higher equity AFUDC | 1.0 |
| Interest on Texas Sales and Use Tax refund | 0.2 |
| Other | 0.7 |
| Net Change | $ 2.7 |

Table of Contents

| | Three Months Ended June 30, 2026 Change |
|---|---|
| *Interest charges:* | (In millions) |
| TNMP Merger Backstop Term Loan in June 2025 (Note 9) | $ 1.3 |
| Loss on reacquired debt in June 2025 | 5.3 |
| Interest on FMBs | (5.4) |
| Lower interest on short-term borrowings | 0.8 |
| Lower debt AFUDC | (0.4) |
| Lower interest on transmission interconnection and security deposit arrangements | 0.2 |
| Other | 0.1 |
| Net Change | $ 1.9 |

| | |
|---|---|
| *Income (taxes) benefits:* | |
| Higher segment earnings before income taxes | $ (4.9) |
| Higher amortization of excess deferred income taxes | 0.2 |
| Other | 0.2 |
| Net Change | $ (4.5) |

*Operating Results – Six Months Ended June 30, 2026 compared to 2025*

The following table summarizes the significant changes to gross margin:

| | Six Months Ended June 30, 2026 Change |
|---|---|
| *Gross margin:* | (In millions) |
| Utility margin (see below) | $ 43.1 |
| Depreciation and amortization (see below) | (8.0) |
| Lower vegetation management and outside services expense, partially offset by higher employee related expense, excluding administrative costs | 2.4 |
| Net Change | $ 37.5 |

The following table summarizes the significant changes to utility margin:

| | Six Months Ended June 30, 2026 Change |
|---|---|
| *Utility margin:* | (In millions) |
| *Transmission rate relief/load* – Transmission cost of service rate increases in March 2025 and September 2025, and a decrease in ERCOT approved demand in May 2025 | $ 9.5 |
| *Distribution rate relief* – Distribution cost of service rate increases in June 2025 and December 2025 | 11.2 |
| *Volumetric-based consumer usage/load* – Weather normalized KWh sales increased 1.4%; the number of volumetric consumers increased 1.5% | 1.3 |
| *Demand-based consumer usage/load* – Weather normalized demand-based MW sales for large commercial and industrial consumers excluding retail transmission consumers increased 4.5% | 2.0 |
| *Weather* – Milder weather in 2026 | (2.4) |
| *Rate relief* - Increase in revenue due to interim base rates pending final order Note 12 | 1.6 |
| Impacts of revenues recorded under HB 5247 Note 12 | 19.2 |
| Increase in deferral of excess deferred income tax benefits refunded through base rates | 1.1 |
| *Rate Riders and other* – Includes transmission cost recovery factor and energy efficiency rider which are partially offset in operating expenses | (0.4) |
| Net Change | $ 43.1 |

Table of Contents

The following tables summarize the primary drivers for changes in operating expenses, depreciation and amortization, other income (deductions), interest charges, and income taxes:

| | Six Months Ended June 30, 2026 Change |
|---|---|
| *Operating expenses:* | (In millions) |
| Lower employee related, outside services and vegetation management expense | $ (4.3) |
| Higher property taxes due to increased utility plant in service | 2.4 |
| Lower capitalization of administrative and general expenses due to lower construction expenditures | 4.2 |
| Higher allocated depreciation and amortization expense from Corporate and Other | 0.7 |
| Lower insurance premiums | (0.4) |
| Other | (0.3) |
| Net Change | $ 2.3 |

| | |
|---|---|
| *Depreciation and amortization:* | |
| Increased utility plant in service | $ 7.8 |
| Other | 0.2 |
| Net Change | $ 8.0 |

| | |
|---|---|
| *Other income (deductions):* | |
| Lower CIAC | $ (0.6) |
| Higher equity AFUDC | 3.0 |
| Interest on Texas Sales and Use Tax refund | 0.2 |
| Other | 0.9 |
| Net Change | $ 3.5 |

| | |
|---|---|
| *Interest charges:* | |
| TNMP Merger Backstop Term Loan in June 2025 (Note 9) | $ 1.3 |
| Loss on reacquired debt in June 2025 | 5.3 |
| Interest on FMBs | (10.9) |
| Lower interest on short-term borrowings | 2.5 |
| Lower debt AFUDC | (1.2) |
| Lower interest on transmission interconnection and security deposit arrangements | 0.6 |
| Other | 0.3 |
| Net Change | $ (2.1) |

| | |
|---|---|
| *Income (taxes) benefits:* | |
| Higher segment earnings before income taxes | $ (7.2) |
| Higher amortization of excess deferred federal income taxes | 0.2 |
| Other | 0.2 |
| Net Change | $ (6.8) |

**PNM**

**Non-GAAP Financial Measures**

PNM defines utility margin as electric operating revenues less cost of energy, which consists primarily of fuel and purchase power costs. PNM believes that utility margin provides a more meaningful basis for evaluating operations than electric operating revenues since substantially all fuel and purchase power costs are offset in revenues as those costs are passed through to customers under PNM's FPPAC. Utility margin is not a financial measure required to be presented and is

Table of Contents

considered a non-GAAP measure. PNM does not intend for utility margin to represent any financial measure as defined by GAAP however, the calculation of utility margin, as presented, most closely compares to gross margin as defined by GAAP.
Reconciliations between utility margin and gross margin are presented below.

| | Three Months Ended June 30, | | | Six Months Ended June 30, | | |
|---|---|---|---|---|---|---|
| | 2026 | 2025 | Change | 2026 | 2025 | Change |
| | (In millions) | | | | | |
| Gross margin | $ 134.9 | $ 111.4 | $ 23.5 | $ 235.4 | $ 213.7 | $ 21.7 |
| Energy production costs | 25.3 | 26.1 | (0.8) | 49.7 | 50.6 | (0.9) |
| Transmission and distribution costs | 15.4 | 15.8 | (0.4) | 33.3 | 31.6 | 1.7 |
| Depreciation and amortization | 65.3 | 60.8 | 4.5 | 129.4 | 120.6 | 8.8 |
| Utility margin | $ 240.9 | $ 214.0 | $ 26.9 | $ 447.9 | $ 416.5 | $ 31.4 |

The following table summarizes the operating results for PNM:

| | Three Months Ended June 30, | | | Six Months Ended June 30, | | |
|---|---|---|---|---|---|---|
| | 2026 | 2025 | Change | 2026 | 2025 | Change |
| | (In millions) | | | | | |
| Electric operating revenues | $ 361.1 | $ 338.4 | $ 22.7 | $ 691.1 | $ 671.8 | $ 19.3 |
| Cost of energy | 120.2 | 124.3 | (4.1) | 243.2 | 255.3 | (12.1) |
| Utility margin | 240.9 | 214.0 | 26.9 | 447.9 | 416.5 | 31.4 |
| Operating expenses | 116.6 | 116.6 | — | 237.3 | 227.9 | 9.4 |
| Depreciation and amortization | 65.3 | 60.8 | 4.5 | 129.4 | 120.6 | 8.8 |
| Operating income | 59.0 | 36.6 | 22.4 | 81.1 | 68.0 | 13.1 |
| Other income (deductions) | 29.5 | 26.5 | 3.0 | 26.2 | 29.8 | (3.6) |
| Interest charges | (32.3) | (32.0) | (0.3) | (65.4) | (61.8) | (3.6) |
| Segment earnings before income taxes | 56.1 | 31.2 | 24.9 | 41.9 | 36.0 | 5.9 |
| Income (taxes) benefit | (6.2) | (2.4) | (3.8) | (3.7) | (2.4) | (1.3) |
| Valencia non-controlling interest | (4.0) | (4.3) | 0.3 | (8.1) | (8.0) | (0.1) |
| Preferred stock dividend requirements | (0.1) | (0.1) | — | (0.3) | (0.3) | — |
| Segment earnings (losses) | $ 45.8 | $ 24.4 | $ 21.4 | $ 29.9 | $ 25.3 | $ 4.6 |

The following table shows total GWh sales, including the impacts of weather, by customer class and average number of customers:

| | Three Months Ended June 30, | | | Six Months Ended June 30, | | |
|---|---|---|---|---|---|---|
| | 2026 | 2025 | Percentage Change | 2026 | 2025 | Percentage Change |
| | (Gigawatt hours, except customers) | | | | | |
| Residential | 784.1 | 772.1 | 1.6 % | 1,508.6 | 1,544.8 | (2.3)% |
| Commercial | 919.8 | 899.6 | 2.2 | 1,742.5 | 1,752.6 | (0.6) |
| Industrial [1] | 713.6 | 599.2 | 19.1 | 1,377.1 | 1,183.7 | 16.3 |
| Public authority | 52.8 | 56.4 | (6.4) | 94.2 | 104.2 | (9.6) |
| Economy energy service [2] | 93.8 | 99.1 | (5.3) | 180.3 | 248.8 | (27.5) |
| Other sales for resale [3] | 1,169.9 | 1,111.7 | 5.2 | 2,289.9 | 2,008.8 | 14.0 |
| | 3,734.0 | 3,538.1 | 5.5 % | 7,192.6 | 6,842.9 | 5.1 % |
| Average retail customers (thousands) | 559.9 | 556.3 | 0.6 % | 559.6 | 555.9 | 0.7 % |

[1] Includes energy provided by PNM for renewable energy resources to match the energy and capacity requirements of the Meta data center. PNM purchases renewable energy which is passed through to Meta under a rate rider. A special service rate is applied to Meta's energy consumption in those hours of the month when their consumption exceeds the energy production from the renewable resources.
[2] PNM purchases energy for a large customer on the customer's behalf and delivers the energy to the customer's location through PNM's transmission system. PNM charges the customer for the cost of the energy as a direct pass through to the customer with only a minor impact in utility margin resulting from providing ancillary services.
[3] Includes sales for resale activity resulting from PNM's participation in the EIM.

Table of Contents

*Operating Results – Three Months Ended June 30, 2026, compared to 2025*

The following table summarizes the significant changes to gross margin:

| | Three Months Ended June 30, 2026 Change |
|---|---|
| *Gross margin:* | (In millions) |
| Utility margin (see below) | $ 26.9 |
| Depreciation and amortization (see below) | (4.5) |
| Lower plant maintenance costs at gas fired plants, partially offset by higher costs at PVNGS and Four Corners | 0.1 |
| Lower outside services and employee related expenses, partially offset by higher vegetation management expenses, excluding administrative costs | 0.6 |
| Other | 0.4 |
| Net Change | $ 23.5 |

The following table summarizes the significant changes to utility margin:

| | Three Months Ended June 30, 2026 Change |
|---|---|
| *Utility margin:* | (In millions) |
| *Retail customer usage/load* – Weather normalized retail KWh sales increased 1.3% for residential customers, 1.5% for commercial customers and 5.5% for industrial customers | $ 2.7 |
| *Weather* – Warmer weather in the second quarter of 2026 | 1.1 |
| *Rate relief* – Increase in revenue approved in 2025 Rate Request | 21.5 |
| *Transmission* – Increase in revenues primarily due to higher formula rates and volumes, partially offset by lower market prices and higher expenses | 7.0 |
| *Capacity arrangements* – Additional energy storage agreements starting in the fourth quarter of 2025 and the first quarter of 2026 partially offset with a sales agreement in 2026 | (5.0) |
| *Rate riders and other* – Includes renewable energy, FPPAC, energy efficiency, energy transition charge, grid modernization, and transportation electrification riders which are partially offset in operating expenses, depreciation and amortization, other income (deductions), and interest charges | (0.4) |
| Net Change | $ 26.9 |

The following tables summarize the primary drivers for changes in operating expenses, depreciation and amortization, other income (deductions), interest charges, and income taxes:

| | Three Months Ended June 30, 2026 Change |
|---|---|
| *Operating expenses:* | (In millions) |
| Higher costs at PVNGS and Four Corners, partially offset by lower costs at gas fired plants | $ 0.3 |
| Lower outside services expense, partially offset by higher employee related and vegetation management expense | (0.2) |
| Higher property taxes associated with increased utility plant in service | 0.5 |
| Lower allocated charitable contributions from Corporate and Other related to the 2025 Rate Request | (1.5) |
| Higher costs associated with rate riders included in utility margin | 1.1 |
| Higher allocated depreciation and amortization expense from Corporate and Other | 0.5 |
| Other | (0.7) |
| Net Change | $ — |

Table of Contents

| | Three Months Ended June 30, 2026 Change |
|---|---|
| *Depreciation and amortization:* | (In millions) |
| Increased utility plant in service | $ 3.3 |
| Amortization related to grid modernization costs, offset in utility margin | 1.1 |
| Other | 0.1 |
| Net Change | $ 4.5 |
| *Other income (deductions):* | |
| Increased performance on investment securities in the NDT and coal mine reclamation trusts | $ 0.9 |
| Lower expenses related to investment securities in the NDT and coal mine reclamation trust, partially offset by lower interest income | 0.8 |
| Higher equity AFUDC | 1.1 |
| Other | 0.2 |
| Net Change | $ 3.0 |
| *Interest charges:* | |
| Lower interest on term loans | $ 1.7 |
| Interest on SUNs | (3.2) |
| Lower interest on short-term borrowings | 0.5 |
| Lower interest on transmission interconnection and security deposit arrangements | 0.5 |
| Other | 0.2 |
| Net Change | $ (0.3) |
| *Income (taxes) benefits:* | |
| Higher segment earnings before income taxes | $ (6.4) |
| Higher amortization of federal excess deferred income taxes | 2.1 |
| Other | 0.5 |
| Net Change | $ (3.8) |

*Operating Results – Six Months Ended June 30, 2026 compared to 2025*

The following table summarizes the significant changes to gross margin:

| | Six Months Ended June 30, 2026 Change |
|---|---|
| *Gross margin:* | (In millions) |
| Utility margin (see below) | $ 31.4 |
| Depreciation and amortization (see below) | (8.8) |
| Lower plant maintenance costs at gas fired plants and Four Corners, partially offset by higher costs at PVNGS | 0.1 |
| Higher vegetation management expense, partially offset by lower outside services and employee related expenses, excluding administrative costs | (1.2) |
| Other | 0.2 |
| Net Change | $ 21.7 |

Table of Contents

The following table summarizes the significant changes to utility margin:

| | Six Months Ended June 30, 2026 Change |
|---|---|
| *Utility margin:* | (In millions) |
| *Retail customer usage/load* – Weather normalized retail KWh sales increased 4.5% for industrial customers and decreased 0.8% for residential customers and 0.7% for commercial customers | $ 0.1 |
| *Weather* – Milder weather in 2026 | (2.6) |
| *Rate relief* – Increase in revenue approved in 2025 Rate Request | 34.2 |
| *Transmission* – Increase in revenues primarily due to higher formula rates and volumes, partially offset by lower market prices and higher expenses | 11.2 |
| *Capacity arrangements* – Additional energy storage agreements starting in the fourth quarter of 2025 and the first quarter of 2026 partially offset with a sales agreement in 2026 | (11.4) |
| *Rate riders and other* – Includes renewable energy, FPPAC, energy efficiency, energy transition charge, grid modernization, and transportation electrification riders which are partially offset in operating expenses, depreciation and amortization, other income (deductions), and interest charges | (0.1) |
| Net Change | $ 31.4 |

The following tables summarize the primary drivers for changes in operating expenses, depreciation and amortization, other income (deductions), interest charges, and income taxes:

| | Six Months Ended June 30, 2026 Change |
|---|---|
| *Operating expenses:* | (In millions) |
| Higher costs at PVNGS partially offset by lower costs at Four Corners and gas fired plants | $ 0.5 |
| Higher employee related and vegetation management expense | 4.7 |
| Higher property taxes associated with increased utility plant in service | 3.7 |
| Higher allocated depreciation and amortization expense from Corporate and Other | 1.1 |
| Lower allocated charitable contributions from Corporate and Other related to the 2025 Rate Request | (1.5) |
| Higher costs associated with rate riders included in utility margin | 1.3 |
| Other | (0.4) |
| Net Change | $ 9.4 |

| | |
|---|---|
| *Depreciation and amortization:* | |
| Increased utility plant in service | $ 7.4 |
| Amortization related to grid modernization costs, offset in utility margin | 1.1 |
| Other | 0.3 |
| Net Change | $ 8.8 |

| | |
|---|---|
| *Other income (deductions):* | |
| Decreased performance on investment securities in the NDT and coal mine reclamation trusts | $ (6.8) |
| Lower expenses related to investment securities in the NDT and coal mine reclamation trust, partially offset by lower interest income | 1.1 |
| Higher equity AFUDC | 2.4 |
| Other | (0.3) |
| Net Change | $ (3.6) |

Table of Contents

| | Six Months Ended June 30, 2026 Change |
|---|---|
| *Interest charges:* | (In millions) |
| Lower interest on term loans | $ 2.8 |
| Interest on SUNs | (9.4) |
| Lower interest on short-term borrowings | 1.8 |
| Lower interest on transmission interconnection and security deposit arrangements | 1.2 |
| Net Change | $ (3.6) |
| *Income (taxes) benefits:* | |
| Higher segment earnings before income taxes | $ (1.5) |
| Other | 0.2 |
| Net Change | $ (1.3) |

**Corporate and Other**

The table below summarizes the operating results for Corporate and Other:

| | Three Months Ended June 30, | | | Six Months Ended June 30, | | |
|---|---|---|---|---|---|---|
| | 2026 | 2025 | Change | 2026 | 2025 | Change |
| | (In millions) | | | | | |
| Electric operating revenues | $ — | $ — | $ — | $ — | $ — | $ — |
| Cost of energy | — | — | — | — | — | — |
| Utility margin | — | — | — | — | — | — |
| Operating expenses | (6.5) | 3.1 | (9.6) | (14.4) | (4.2) | (10.2) |
| Depreciation and amortization | 9.7 | 9.5 | 0.2 | 19.4 | 19.1 | 0.3 |
| Operating (loss) | (3.3) | (12.6) | 9.3 | (5.0) | (14.8) | 9.8 |
| Other income (deductions) | (0.2) | (1.6) | 1.4 | (0.5) | (1.8) | 1.3 |
| Interest charges | (15.0) | (16.1) | 1.1 | (29.1) | (32.5) | 3.4 |
| Segment (loss) before income taxes | (18.4) | (30.3) | 11.9 | (34.7) | (49.1) | 14.4 |
| Income (taxes) benefit | 4.0 | 6.6 | (2.6) | 9.1 | 11.0 | (1.9) |
| Segment (loss) | $ (14.4) | $ (23.8) | $ 9.4 | $ (25.5) | $ (38.1) | $ 12.6 |

Corporate and Other operating expenses shown above are net of amounts allocated to PNM and TNMP under shared services agreements. The amounts allocated include certain expenses shown as depreciation and amortization and other income (deductions) in the table above. The change in operating expense for the three and six months ended June 30, 2026, includes decreases of $10.6 million and $11.4 million for costs related to the Merger. Substantially all depreciation and amortization expense is offset in operating expenses as a result of allocation of these costs to other business segments.

*Operating Results – Three Months Ended June 30, 2026 compared to 2025*

The following tables summarize the primary drivers for changes in other income (deductions), interest charges, and income taxes:

| | Three Months Ended June 30, 2026 Change |
|---|---|
| *Other income (deductions):* | (In millions) |
| Lower charitable contributions allocated to PNM | $ 1.5 |
| Lower income at PNMR Development | (0.1) |
| Net Change | $ 1.4 |

Table of Contents

| | Three Months Ended June 30, 2026 Change |
|---|---|
| *Interest charges:* | (In millions) |
| Lower interest on short-term borrowings | $ 0.7 |
| Lower interest on term loans | 6.4 |
| Issuance of $350.0 million Jr. Subordinated Notes in December 2025 | (6.1) |
| Other | 0.1 |
| Net Change | $ 1.1 |

| | |
|---|---|
| *Income (taxes) benefits:* | |
| Lower segment loss before income taxes | $ (3.0) |
| Impact of difference in effective tax rates used by TXNM and its subsidiaries in the calculation of income taxes in interim periods | 0.4 |
| Net Change | $ (2.6) |

*Operating Results – Six Months Ended June 30, 2026 compared to 2025*

The following tables summarize the primary drivers for changes in other income (deductions), interest charges, and income taxes:

| | Six Months Ended June 30, 2026 Change |
|---|---|
| *Other income (deductions):* | (In millions) |
| Lower charitable contributions allocated to PNM | $ 1.5 |
| Lower income at PNMR Development | (0.2) |
| Net Change | $ 1.3 |

| | |
|---|---|
| *Interest charges:* | |
| Lower interest on short-term borrowings | $ 2.3 |
| Lower interest on term loans | 13.1 |
| Issuance of $350.0 million Jr. Subordinated Notes in December 2025 | (12.3) |
| Other | 0.3 |
| Net Change | $ 3.4 |

| | |
|---|---|
| *Income (taxes) benefits:* | |
| Lower segment loss before income taxes | $ (3.7) |
| Impact of difference in effective tax rates used by TXNM and its subsidiaries in the calculation of income taxes in interim periods | 1.6 |
| Other | 0.2 |
| Net Change | $ (1.9) |

Table of Contents

## LIQUIDITY AND CAPITAL RESOURCES

**Statements of Cash Flows**

The changes in TXNM's cash flows for the six months ended June 30, 2026, compared to June 30, 2025, are summarized as follows:

| | Six Months Ended June 30, | | |
|---|---|---|---|
| | 2026 | 2025 | Change |
| | (In millions) | | |
| Net cash flows from (used in): | | | |
| Operating activities | $ 223.0 | $ 144.8 | $ 78.2 |
| Investing activities | (581.0) | (611.3) | 30.3 |
| Financing activities | 353.0 | 481.9 | (128.9) |
| Net change in cash, cash equivalents, and restricted cash | $ (5.0) | $ 15.4 | $ (20.4) |

*Cash Flows from Operating Activities*

Changes in TXNM's cash flow from operating activities result from net earnings, adjusted for items impacting earnings that do not provide or use cash. See Results of Operations above. Certain changes in assets and liabilities resulting from normal operations, including the effects of the seasonal nature of the Company's operations, also impact operating cash flows.

*Cash Flows from Investing Activities*

The changes in TXNM's cash flows used in investing activities relate primarily to changes in utility plant additions. Cash flows from investing activities include purchases and sales of investment securities in the NDT, SJGS decommissioning trust, and coal mine reclamation trusts. Major components of TXNM's cash inflows and (outflows) from investing activities are shown below:

| | Six Months Ended June 30, | | |
|---|---|---|---|
| | 2026 | 2025 | Change |
| **Cash (Outflows) for Utility Plant Additions** | | (In millions) | |
| PNM: | | | |
| Generation | $ (126.2) | $ (60.5) | $ (65.7) |
| Transmission and distribution | (166.6) | (200.5) | 33.9 |
| Grid Modernization Plan | (16.4) | — | (16.4) |
| Nuclear fuel | (9.1) | (11.7) | 2.6 |
| | (318.3) | (272.7) | (45.6) |
| TNMP: | | | |
| Transmission | (75.4) | (144.1) | 68.7 |
| Distribution | (90.1) | (173.6) | 83.5 |
| SRP | (51.0) | — | (51.0) |
| | (216.5) | (317.7) | 101.2 |
| Corporate and Other: | | | |
| Computer hardware, software, general services, and other | (42.8) | (18.4) | (24.4) |
| | (577.6) | (608.8) | 31.2 |
| **Other Cash Flows from Investing Activities** | | | |
| Proceeds from sales of investment securities | $ 329.7 | $ 198.7 | $ 131.0 |
| Purchases of investment securities | (333.2) | (201.2) | (132.0) |
| Other, net | 0.1 | — | 0.1 |
| | (3.4) | (2.5) | (0.9) |
| Net cash flows used in investing activities | $ (581.0) | $ (611.3) | $ 30.3 |

*Cash Flows from Financing Activities*

The changes in TXNM's cash flows from financing activities include:

- Short-term borrowings increased $301.6 million in 2026 compared to an decrease of $263.6 million in 2025, resulting in a net increase in cash flows from financing activities of $565.2 million
- In 2026, TXNM sold 2,123,544 shares of TXNM common stock under the TXNM 2026 ATM Program aggregating $123.7 million and used the proceeds to make cash equity contributions to PNM and for other corporate purposes

Table of Contents

**Financing Activities**

See Note 7 of the Notes to Consolidated Financial Statements in the 2025 Annual Reports on Form 10-K and Note 9 for additional information concerning the Company's financing activities. PNM must obtain NMPRC approval for any financing transaction having a maturity of more than 18 months. In addition, PNM files its annual informational financing filing and short-term financing plan with the NMPRC.

The Company's ability to access the credit and capital markets at a reasonable cost is largely dependent upon its:

- Ability to earn a fair return on equity
- Results of operations
- Ability to obtain required regulatory approvals
- Conditions in the financial markets
- Credit ratings

The Company is closely monitoring the impacts on the capital markets of other macroeconomic conditions, including actions by the Federal Reserve to address inflationary concerns or other market conditions, and geopolitical activity, including the potential impacts of tariffs. The Company currently believes it has adequate liquidity but cannot predict the effects of any of these macroeconomic conditions on the global, national, or local economy, including the Company's ability to access capital in the financial markets, or on the Company's financial position, results of operations, and cash flows.

Each of the Company's revolving credit facilities and term loans contain a single financial covenant that requires the maintenance of a debt-to-capitalization ratio. For the TXNM agreements, this ratio must be maintained at less than or equal to 70%, and for the PNM and TNMP agreements, this ratio must be maintained at less than or equal to 65%. The Company's revolving credit facilities, term loans, and other debt agreements generally also contain customary covenants, events of default, cross-default provisions, and change-of-control provisions. The Company is in compliance with its debt covenants.

Pursuant to the TXNM 2026 ATM Program, TXNM sold an aggregate of 2,123,544 shares of TXNM common stock under the Distribution Agreement for net cash proceeds of $123.7 million. TXNM used the proceeds to pay cash equity contributions to PNM and for other corporate purposes. See Note 9.

On May 1, 2026, TXNM, PNM, and TNMP each established Programs pursuant to which they may issue, from time to time, Notes under the exemption from registration contained in Section 4(a)(2) of the Securities Act. Amounts available under the Programs may be borrowed, repaid and re-borrowed from time to time, with the aggregate face or principal amount of the Notes outstanding under the Programs at any time not to exceed $300.0 million for TXNM, $400.0 million for PNM, and $300.0 million for TNMP. The Notes will have maturities of up to 364 days from the date of issue and net proceeds will be used for general corporate purposes. Each of TXNM, PNM and TNMP have agreed to maintain, at all times, unused available borrowing capacity under their respective revolving credit agreements (except for the PNM New Mexico Credit Agreement) in an amount at least equal to the amount of Notes outstanding at any time. Notes outstanding under the Programs as of June 30, 2026 are $44.1 million for TXNM, zero for PNM, and $15.0 million for TNMP.

On July 17, 2026, TXNM entered into the TXNM 2026 Delayed-Draw Term Loan between TXNM and Wells Fargo Bank, National Association, as administrative agent. Draws on the TXNM 2026 Delayed-Draw Term Loan bear interest at a variable rate, and mature on January 17, 2029. TXNM drew the full amount available under the TXNM 2026 Delayed-Draw Term Loan on July 22, 2026, and used such amount to fully repay the $400.0 million previously received under the May 2025 Stock Purchase Agreement in connection with unwinding the transaction as a result of the NMPRC's Final Order issued in the show cause matter (Note 12).

On July 21, 2026, PNM entered into the PNM 2026 Term Loan, among PNM, the lenders party thereto and Canadian Imperial Bank of Commerce, New York Branch, as administrative agent. PNM used the proceeds of the PNM 2026 Term Loan to repay borrowings under the PNM 2025 Term Loan which matured on July 21, 2026.

**Capital Requirements**

TXNM's total capital requirements consist of construction expenditures and cash dividend requirements for TXNM common stock and PNM preferred stock.

Key activities in TXNM's current construction program include:

- Investing in transmission and distribution infrastructure
- Upgrading generation resources and delivering clean energy
- Purchasing nuclear fuel

Table of Contents

Projected capital requirements, including amounts expended through June 30, 2026, are:

| | 2026 | 2027-2030 | Total |
|---|---|---|---|
| | | (In millions) | |
| Construction expenditures | $ 1,566.9 | $ 8,647.9 | $ 10,214.8 |
| Dividends on TXNM common stock | 184.1 | 736.3 | 920.4 |
| Dividends on PNM preferred stock | 0.5 | 2.1 | 2.6 |
| Total capital requirements | $ 1,751.5 | $ 9,386.3 | $ 11,137.8 |

The construction expenditure estimates are under continuing review and subject to ongoing adjustment, as well as to Board review and approval and in certain instances, require regulatory approval. The construction expenditures above include TNMP's investments to support continued high growth in system demand across TNMP's service territories and growing encouragement for infrastructure investments from the Texas legislature to support grid reliability and resilience. PNM's capital initiatives include investments in generation, transmission, and distribution infrastructure to deliver clean energy, support customer growth, enhance customer satisfaction, and increase grid resilience. Construction expenditures also include investments in PNM's Grid Modernization Plan and TNMP's SRP. These investments provide for a more resilient, reliable, efficient, and decarbonized electric system. Construction expenditures included in the table above may change due to incremental expenditures for new customer growth in New Mexico and Texas, and other transmission and renewable energy expansion in New Mexico. The ability of TXNM to pay dividends on its common stock is dependent upon the ability of PNM and TNMP to pay dividends to TXNM and the Merger (See Note 17). See Note 6 of the Notes to the Consolidated Financial Statements in the 2025 Annual Reports on Form 10-K for a discussion of regulatory and contractual restrictions on the payment of dividends by PNM and TNMP.

During the six months ended June 30, 2026, TXNM met its capital requirements and construction expenditures through cash generated from operations, as well as its liquidity arrangements and the borrowings discussed in Financing Activities above.

In addition to the capital requirements for construction expenditures and dividends, the Company has long-term debt and term loans that must be paid or refinanced at maturity. PNM has $3.7 million and $3.8 million in scheduled principal payments due for the ETBC I Securitized Bonds in August 2026 and February 2027. PNM also has $100.3 million of 0.875% PCRBs outstanding with a mandatory tender date of October 1, 2026, and $120.0 million under the PNM November 2025 Term Loan due in May 2027. See Note 7 of the Notes to Consolidated Financial Statements in the 2025 Annual Reports on Form 10-K and Note 9 for additional information about the Company's long-term debt and equity arrangements. The Company may also enter into new arrangements similar to the existing agreements, borrow under the revolving credit facilities, or issue new long-term debt or equity in the public or private capital markets, or a combination of these sources. The Company has from time to time refinanced or repurchased portions of its outstanding debt before scheduled maturity. Depending on market conditions, the Company may refinance other debt issuances or make additional debt repurchases in the future.

**Liquidity**

TXNM's liquidity arrangements include the $300.0 million TXNM Revolving Credit Facility, the $400.0 million PNM Revolving Credit Facility, and the $300.0 million TNMP Revolving Credit Facility. Each of these facilities matures on March 29, 2030, and contains a one-year extension option that, if exercised, would extend the maturity to March 2031, subject to approval by a majority of the lenders. On December 19, 2025, when the first extension options were exercised, one lender in each of the revolving credit facilities failed to agree to the extension. As a result, effective March 30, 2029, the TXNM Revolving Credit Facility capacity will adjust to $265.4 million, the PNM Revolving Credit Facility capacity will adjust to $354.1 million, and the TNMP Revolving Credit Facility capacity will adjust to $277.0 million. PNM also has the $40.0 million PNM New Mexico Credit Facility that matures on May 31, 2030. Variable interest rates under the TXNM, PNM, and TNMP revolving credit facilities are based on SOFR. The Company believes the terms and conditions of these facilities are consistent with those of other investment grade revolving credit facilities in the utility industry. The Company expects that it will be able to extend or replace these credit facilities under similar terms and conditions prior to their expirations.

The revolving credit facilities and the PNM New Mexico Credit Facility provide short-term borrowing capacity. The revolving credit facilities also allow letters of credit to be issued. Letters of credit reduce the available capacity under the facilities. The Company may also issue Notes under the Commercial Paper Programs, further reducing the available capacity under each facility, except the PNM New Mexico Credit Facility. The Company utilizes these credit facilities, Notes, and cash flows from operations to provide funds for both construction and operational expenditures. The Company's business is seasonal with more revenues and cash flows from operations being generated in the summer months. In general, the Company may utilize Notes issued under its Commercial Paper Programs and relies on the credit facilities to be the initial funding source for construction expenditures. Accordingly, borrowings under the facilities may increase over time. Depending on market and other conditions, the Company will periodically issue equity or long-term debt and use the proceeds to reduce the borrowings under the credit facilities or refinance other debt.

Table of Contents

Information regarding the range of borrowings for each facility is as follows:

| Range of Borrowings | Three Months Ended June 30, 2026 | | Six Months Ended June 30, 2026 | |
|---|---|---|---|---|
| | Low | High | Low | High |
| | (In millions) | | | |
| PNM: | | | | |
| PNM Revolving Credit Facility | $ 60.0 | $ 175.0 | $ 60.0 | $ 209.0 |
| PNM New Mexico Credit Facility | 40.0 | 40.0 | 40.0 | 40.0 |
| Commercial Paper Notes | — | 124.0 | — | 124.0 |
| TNMP: | | | | |
| TNMP Revolving Credit Facility | — | 95.9 | — | 95.9 |
| Commercial Paper Notes | — | 114.3 | — | 114.3 |
| TXNM: | | | | |
| TXNM Revolving Credit Facility | 19.0 | 115.4 | — | 115.4 |
| Commercial Paper Notes | — | 113.5 | — | 113.5 |

At June 30, 2026, the weighted average interest rates on borrowings outstanding were 4.90% for the PNM Revolving Credit Facility, 5.00% for the PNM New Mexico Credit Facility, 4.52% for the TNMP Revolving Credit Facility, 4.10% for the TNMP Commercial Paper Notes, 5.15% for the TXNM Revolving Credit Facility, and 4.19% for the TXNM Commercial Paper Notes. There were no Notes outstanding under the PNM Commercial Paper Programs as of June 30, 2026.

The Company currently believes that its capital requirements for at least the next twelve months can be met through internal cash generation, existing, extended, or new credit arrangements, and access to public and private capital markets as discussed above and in Note 9. The Company anticipates that additional long-term financing, in the form of debt and/or equity issuances, will be necessary to fund its capital requirements and to balance its capital structure during the 2026-2030 period. To cover the difference in the amounts and timing of internal cash generation and cash requirements, the Company intends to use short-term borrowings under its current and future liquidity arrangements or other short-term loans. Market conditions, such as rising interest rates, may raise the cost of borrowing under the Company's current and future liquidity arrangements or other variable debt. In addition, if market conditions worsen, the Company may not be able to access the capital markets or renew credit facilities when they expire. Should that occur, the Company would seek to improve cash flows by reducing capital expenditures and exploring other available alternatives.

As of July 24, 2026, ratings on the Company's securities were as follows:

| | TXNM | PNM | TNMP |
|---|---|---|---|
| S&P | | | |
| Issuer rating | BBB | BBB | BBB+ |
| Senior secured debt | * | * | A |
| Senior unsecured debt | BBB- | BBB | * |
| Junior subordinated debt | BB+ | * | * |
| Preferred stock | * | BB+ | * |
| Moody's | | | |
| Issuer rating | Baa3 | Baa2 | Baa1 |
| Senior secured debt | * | * | A2 |
| Senior unsecured debt | Baa3 | Baa2 | * |
| Junior subordinated debt | Ba1 | * | * |
| * Not applicable | | | |

In its May 2025 credit opinion, S&P commented that it views the proposed Merger as credit supportive. S&P commented on the Final Order in the show cause proceeding in a July 2026 research report indicating that the resulting delay in the closing of the proposed Merger is a negative development but it does not immediately impact its ratings, as the impact on credit measures is viewed as temporary. In its June 2025 credit opinion, Moody's commented that the announced terms of the proposed Merger are not expected to adversely affect the ratings or outlooks of TXNM or its two utility subsidiaries. Investors are cautioned that a security rating is not a recommendation to buy, sell, or hold securities, that each rating is subject to revision or withdrawal at any time by the rating organization, and that each rating should be evaluated independently of any other rating.

Table of Contents

A summary of liquidity arrangements as of July 24, 2026, is as follows:

| | PNM | TNMP | TXNM Separate | TXNM |
|---|---|---|---|---|
| | | | (In millions) | |
| Financing capacity: | | | | |
| Revolving Credit Facility | $ 400.0 | $ 300.0 | $ 300.0 | $ 1,000.0 |
| PNM New Mexico Credit Facility | 40.0 | — | — | 40.0 |
| Total financing capacity | 440.0 | 300.0 | 300.0 | 1,040.0 |
| Amounts outstanding as of July 24, 2026: | | | | |
| Commercial Paper Program | — | — | — | — |
| Revolving Credit Facility | 180.0 | 107.0 | 197.0 | 484.0 |
| PNM New Mexico Credit Facility | 40.0 | — | — | 40.0 |
| Letters of credit | — | — | 3.1 | 3.1 |
| Total short-term debt and letters of credit | 220.0 | 107.0 | 200.1 | 527.1 |
| Remaining availability as of July 24, 2026 | $ 220.0 | $ 193.0 | $ 99.9 | $ 512.9 |
| Invested cash as of July 24, 2026 | $ — | $ 4.3 | $ 1.5 | $ 5.8 |

In addition to the above, TXNM has $20.2 million of letters of credit issued. The above table excludes intercompany debt. As of July 24, 2026, PNM and TNMP had $46.3 million and $0 in borrowings from TXNM under their respective intercompany loan agreements. The remaining availability under the revolving credit facilities at any point in time varies based on a number of factors, including the timing of collections of accounts receivables and payments for construction and operating expenditures.

**Other Material Cash Requirements**

TXNM, PNM, and TNMP have contractual obligations for long-term debt, minimum lease payments, coal contracts, coal mine reclamation, nuclear decommissioning, SJGS plant decommissioning, pension and retiree medical contributions, and other long-term obligations. See MD&A – Other Material Cash Requirements in the 2025 Annual Reports on Form 10-K.

**Contingent Provisions of Certain Obligations**

As discussed in the 2025 Annual Reports on Form 10-K, TXNM, PNM, and TNMP have a number of debt obligations and other contractual commitments that contain contingent provisions. Some of these, if triggered, could affect the liquidity of the Company. In the unlikely event that the contingent requirements were to be triggered, TXNM, PNM, or TNMP could be required to provide security, immediately pay outstanding obligations, or be prevented from drawing on unused capacity under certain credit agreements. The contingent provisions also include contractual increases in the interest rate charged on certain of the Company's short-term debt obligations in the event of a downgrade in credit ratings. The Company believes its financing arrangements are sufficient to meet the requirements of the contingent provisions. No conditions have occurred that would result in any of the above contingent provisions being implemented.

Table of Contents

**Capital Structure**

The capitalization tables below include the current maturities of long-term debt but does not include short-term debt or lease obligations as debt.

| | June 30, 2026 | December 31, 2025 |
|---|---|---|
| **TXNM** | | |
| TXNM common equity | 39.6 % | 38.5 % |
| Preferred stock of subsidiary | 0.1 | 0.2 |
| Long-term debt [1] | 60.3 | 61.3 |
| Total capitalization | 100.0 % | 100.0 % |
| **PNM** | | |
| PNM common equity | 46.9 % | 45.5 % |
| Preferred stock | 0.2 | 0.2 |
| Long-term debt | 52.9 | 54.3 |
| Total capitalization | 100.0 % | 100.0 % |
| **TNMP** | | |
| Common equity | 52.0 % | 51.0 % |
| Long-term debt | 48.0 | 49.0 |
| Total capitalization | 100.0 % | 100.0 % |

[1] TXNM's long-term debt includes Convertible Notes, which receive 50% equity credit from ratings organizations.

## OTHER ISSUES FACING THE COMPANY

**Climate Change Issues**

*Background*

For the past several years, management has identified multiple risks and opportunities related to climate change, including the impacts of severe weather events, potential environmental regulation, technological innovation, and availability of fuel and water for operations, as among the most significant risks facing the Company. Accordingly, these risks are overseen by the Board in order to facilitate more integrated risk and strategy oversight and planning. Board oversight includes understanding the various challenges and opportunities presented by these risks, including the financial consequences that might result from enacted and potential federal and/or state regulation of GHG; plans to mitigate these risks; and the impact these risks may have on the Company's strategy. In addition, the Board approves certain procurements of grid modernization technologies and replacement resources.

Management is also responsible for assessing significant risks, developing and executing appropriate responses, and reporting to the Board on the status of risk activities. For example, management periodically updates the Board on the implementation of corporate environmental policy, and the Company's environmental management systems, including the promotion of energy efficiency programs, and the use of renewable resources. The Board is also informed of the Company's practices and procedures to assess the impact of operations on the environment. The Board considers issues associated with climate change, the Company's GHG exposures, and the financial consequences that might result from enacted and potential federal and/or state regulation of GHG. Management has published, with Board oversight, a Climate Change Report available at https://www.txnmenergy.com/sustainability/environment/climate_change_report that details the Company's efforts to transition to a carbon-free generating portfolio.

As part of management's continuing effort to monitor climate-related risks and assess opportunities, the Company has advanced its understanding of climate change by participating in the "2 Degree Scenario" planning by participating in the Electric Power Research Institute ("EPRI") Understanding Climate Scenarios & Goal Setting Activities program. The program focused on characterizing and analyzing the relationship of individual electric utility company's carbon emissions and global temperature goals. Activities included analyzing the scientific understanding of global emissions pathways that are consistent with limiting global warming and providing insight to assist companies in developing approaches to climate scenario planning. As PNM expands its sustainability efforts, EPRI's environmental and climate analysis programs have also been useful in gaining a better understanding of energy and environmental policy and regulations, advanced clean energy technologies, decarbonization trends and climate impacts. In 2022, PNM joined EPRI's Climate READi program which is a strategic initiative convening a global collaborative of electric utilities, thought leaders, scientific researchers and other key stakeholders to strengthen the power sector's collective approach to managing climate risk to the power system. The program is a three-year initiative, through work across three concurrent workstreams, and PNM will benefit from the development of a first-of-its-kind comprehensive framework for managing physical climate risk and investment prioritization that was launched in May 2025.

Table of Contents

The Company cannot anticipate or predict the potential long-term effects of climate change or climate change related regulation on its results of operations, financial position, or cash flows.

*Greenhouse Gas Emissions Exposures*

In 2024, GHG emissions associated with PNM's interests in its fossil-fueled generating plants included approximately 1.5 million metric tons of $CO_2$, which comprises the vast majority of PNM's GHG emissions.

As of June 30, 2026, approximately 25% of PNM's generating capacity, including resources owned, leased, or under PPAs, all of which is located within the U.S., consisted of coal or gas-fired generation that produces GHG emissions. As PNM shifts its generation to cleaner energy resources, the Company's output of GHG emissions continues to decrease. Many factors affect the amount of GHG emitted, including total electricity sales, plant performance, economic dispatch, and the availability of renewable resources. For example, wind generation performance varies each year as a result of highly seasonal wind patterns and annual wind resource variability. Similarly, if PVNGS experienced prolonged outages or if PNM's entitlement from PVNGS were reduced, PNM might be required to utilize other power supply resources such as gas-fired generation, which could increase GHG emissions.

PNM has several programs underway to reduce or offset GHG emissions from its generation resource portfolio, thereby reducing its exposure to climate change regulation. The shutdown of SJGS resulted in a reduction of GHG emissions for the entire station allowing PNM to attain GHG emissions reductions goals set forth by the ETA, discussed below.

PNM's utility-owned solar and energy storage capacity, as well as solar, energy storage, wind, and geothermal procurements in service as of June 30, 2026, have a total net generation capacity of 3,409 MW. The NMPRC has approved plans for PNM to procure energy and RECs from additional resources to serve retail customers and a data center located in PNM's service territory. PNM's approved resource plans have a generation capacity of 1,318 MW. This includes approximately 280 MW of capacity under the Community Solar Act which will provide customers an additional option of accessing solar energy. PNM will continue to seek approval to procure renewable resources as needed to meet forecasted peak load requirements to serve its customers and New Mexico's RPS and carbon-free resource requirements, while balancing the impact to customers' electricity costs.

PNM also has a customer distributed solar generation program that represented 387.4 MW at June 30, 2026. PNM's distributed solar programs will generate an estimated 774.8 GWh of emission-free solar energy available this year to offset PNM's annual production from fossil-fueled electricity generation. PNM has offered its customers a comprehensive portfolio of energy efficiency and load management programs since 2007. PNM's cumulative savings from these programs were an estimated 9,008 GWh of electricity through 2025. Over the next 20 years, PNM projects energy efficiency and load management programs will provide the equivalent of approximately 12,900 GWh of electricity savings, which will avoid approximately 220,000 tons of $CO_2$ based upon projected emissions from PNM's portfolio of resources. These estimates are subject to change because of the uncertainty of many of the underlying variables, including changes in PNM's generation portfolio, demand for electricity, energy efficiency, and complex relationships between those variables.

Because of PNM's dependence on fossil-fueled generation, legislation or regulation that imposes a limit or cost on GHG could impact the cost at which electricity is produced. While PNM expects to recover any such costs through rates, the timing and outcome of proceedings for cost recovery are uncertain. In addition, to the extent that any additional costs are recovered through rates, customers may reduce their usage, relocate facilities to other areas with lower energy costs, or take other actions that ultimately could adversely impact PNM.

*Other Climate Change Risks*

PNM's generating stations are located in the arid southwest. Access to water for cooling for some of these facilities is critical to continued operations. Forecasts for the impacts of climate change on water supply in the southwest range from reduced precipitation to changes in the timing of precipitation. In either case, PNM's generating facilities requiring water for cooling will need to mitigate the impacts of climate change through adaptive measures. Current measures employed by PNM generating stations include the use of sustainable, less variable groundwater supplies, and investments in technologies such as air cooling and cooling water recycling. These types of actions will continue to be important to sustain operations.

PNM's service areas occasionally experience periodic high winds and severe thunderstorms. TNMP has operations in the Gulf Coast area of Texas, which experiences periodic hurricanes and other extreme weather conditions. In addition to potentially causing physical damage to Company-owned facilities, which disrupts the ability to transmit and/or distribute energy, weather and other events of nature can temporarily reduce customers' usage and demand for energy. In addition, other events influenced by climate change, such as wildfires, could disrupt Company operations or result in third-party claims against the Company. PNM has enhanced its wildfire prevention efforts and maintains a wildfire mitigation plan and a public safety power shutoff plan. TNMP has also developed a wildfire mitigation plan. However, both PNM and TNMP remain at risk for wildfires outside of their control and the resulting damages in their service areas.

Table of Contents

*EPA Regulation*

In 2007, the U.S. Supreme Court held that EPA has the authority to regulate GHG emissions under the CAA, and in 2009, EPA released its endangerment finding for GHG from new motor vehicles, stating that the atmospheric concentrations of six key greenhouse gases ($CO_2$, methane, nitrous oxides, hydrofluorocarbons, perfluorocarbons, and sulfur hexafluoride) endanger the public health and welfare. These actions triggered new GHG permitting requirements for stationary sources, including the energy industry, under the Prevention of Significant Deterioration ("PSD") and Title V program, although the U.S. Supreme Court held the CAA does not authorize EPA to require a source to obtain a PSD permit solely on the basis of its potential GHG emissions.

EPA also determined that its finding of endangerment requires it to issue performance standards under Section 111 of the CAA to regulate GHG emissions from new and existing stationary sources, including fossil fuel fired EGUs. Accordingly, in 2015, EPA issued Carbon Pollution Standards for new, modified, and reconstructed power plants (under Section 111(b)) and the Clean Power Plan for existing power plants (under Section 111(d)).

Multiple states, utilities, and trade groups challenged both the Carbon Pollution Standards for new sources and the Clean Power Plan for existing sources in separate cases, and the challengers successfully petitioned the U.S. Supreme Court for a stay of the Clean Power Plan.

In 2019, EPA repealed the Clean Power Plan, promulgated the ACE Rule, and revised the implementing regulations for all emission guidelines issued under CAA Section 111(d). The ACE Rule was also challenged, and on January 19, 2021, the DC Circuit issued an opinion in American Lung Association and American Public Health Association v. EPA, et al. vacating the ACE Rule.

Numerous parties sought review by the U.S. Supreme Court, and on June 30, 2022, the Court held that the "generation shifting" approach in the Clean Power Plan exceeded the powers granted to EPA by Congress, though the Court did not address the related issue of whether Section 111 of the CAA only authorizes EPA to require measures that can be implemented entirely within the fence line at an individual source. Of broader significance in administrative law, the Court's opinion expressly invoked the major questions doctrine, which requires rules involving issues of "vast economic or political significance," to be supported by clear statutory authorization. In cases where there is no clear statement of authority, courts need not defer to the agency's statutory interpretation on "major questions." The decision sets legal precedent for future rulemakings by EPA and other federal regulatory agencies whereby the agency's authority may be limited based upon similar reasoning.

The litigation over the Carbon Pollution Standards remains held in abeyance but could be reactivated by the parties upon a determination by the court that reconsideration of the rule has concluded.

In 2024, EPA published in the Federal Register proposed regulatory actions under CAA Sections 111(b) and (d) to replace the Clean Power Plan and the ACE Rule and finalized the rules on May 9, 2024. The final rules include revised new source performance standards under Section 111(b) for all new natural gas-fired combustion turbines and emission guidelines under Section 111(d) requiring states to develop standards of performance for GHG emissions from existing fossil-fuel-fired electric steam generating units. In the final rules, EPA determined that the standards for existing coal- or gas-fired steam generating units must be based on the use of either CCS (long-term), natural gas co-firing (medium-term), or exempt from the rule via early retirement. The standards for new combustion turbines must be based on CCS (base load), efficient simple cycle design (intermediate load), or lower-emitting fuels (low load). Over a dozen states, several industry groups, and some power companies and labor unions have filed challenges to the rule at the DC Circuit. The DC Circuit heard oral arguments on December 6, 2024.

On January 20, 2025, President Trump signed an executive order entitled "Unleashing American Energy" directing all agencies, including EPA, to review all agency actions and suspend, revise, or rescind those identified as imposing an undue burden on domestic energy resources. The order also disbands the Interagency Working Group on the Social Cost of Greenhouse Gases, eliminates the "social cost of carbon" from consideration in any Federal permitting or regulatory decision, and expressly directs EPA to submit joint recommendations on the legality and continuing applicability of the 2009 endangerment finding for greenhouse gases. On June 17, 2025, EPA published a proposed rule in the Federal Register with two alternatives to repeal or revise the GHG emission standards for EGUs. EPA primarily proposes to find that GHG emissions from fossil fuel-fired power plants "do not contribute significantly to dangerous air pollution" under the meaning of CAA Section 111, which would preclude EPA from regulating GHG emissions from those plants. As a result, EPA is proposing to repeal all GHG standards for the power sector promulgated under CAA Section 111 in both 2015 and 2024. EPA also proposed in the alternative to find that CCS is not adequately demonstrated, and that neither CCS nor gas co-firing are the best system of emission reduction for GHG emissions from power plants, which findings also support repeal of those specific requirements from the rules adopted in 2024. Comments were due by September 15, 2025, and EPA intends to finalize the proposed rule in 2026.

On August 1, 2025, EPA published a proposal to rescind its 2009 final rule commonly known as the Endangerment Finding. In the Endangerment Finding, EPA found that current and projected atmospheric concentrations of the well-mixed

Table of Contents

combination of six GHGs threaten public health and welfare, and that the combined emissions of these GHGs from new motor vehicles and engines contribute to the GHG pollution that threatens public health and welfare. On February 12, 2026, the final rule was finalized as proposed, repealing all GHG emission standards for certain vehicles and engines promulgated on the basis of the Endangerment Finding. While the Endangerment Finding did not directly impose any requirements on EGUs, EPA has cited the Endangerment Finding as a basis for its authority to regulate GHG emissions from EGUs under CAA Section 111.

*Federal Legislation*

In July 2025, President Trump signed the OBBBA, significantly altering the landscape of climate action and clean energy initiatives in the United States. The legislation revises and, in some cases, phases out tax credits established under the IRA and includes restrictions on the availability of credits for "foreign entities of concern," as such term is used in the OBBBA. Given the control of both houses of Congress by the Republican Party, no additional Federal legislation on climate change is expected during this Congress.

*State and Regional Activity*

Pursuant to New Mexico law, each utility must submit an IRP to the NMPRC every three years to evaluate renewable energy, energy efficiency, load management, distributed generation, and conventional supply-side resources on a consistent and comparable basis. The IRP is required to take into consideration risk and uncertainty of fuel supply, price volatility, and costs of anticipated environmental regulations when evaluating resource options to meet supply needs of the utility's customers. The NMPRC requires that New Mexico utilities factor a standardized cost of carbon emissions into their IRPs using prices ranging between $8 and $40 per metric ton of $CO_2$ emitted and escalating these costs by 2.5% per year. Under the NMPRC order, each utility must analyze these standardized prices as projected operating costs. Reflecting the evolving nature of this issue, the NMPRC order states that these prices may be changed in the future to account for additional information or changed circumstances. Although these prices may not reflect the costs that ultimately will be incurred, PNM is required to use these prices for purposes of its IRP. PNM's 2023 filing has a continued focus on a carbon-free energy system by 2040. The plan highlights the need for the significant sustained addition of resources over the next two decades, replacing retiring or expiring capacity, meeting concurrent load growth, while reducing the carbon intensity of PNM's portfolio.

The ETA, among other things, requires that investor-owned utilities obtain specified percentages of their energy from renewable and carbon-free resources. The passage of the ETA amended the REA to require utilities operating in New Mexico to have renewable portfolios equal to 50% by 2030, 80% by 2040, and 100% zero-carbon energy by 2045. Under the ETA provisions, PNM will also be required to meet a generation emission standard of no more than 400 lbs. of $CO_2$ per MWh beginning in 2023 and not more than 200 lbs. per MWh beginning in 2032. PNM takes this requirement into account in its resource planning and will manage compliance with the standards based upon existing generation resources and approved resource retirements and replacements. The ETA provides for a transition from fossil-fuel generating resources to renewable and other carbon-free resources by allowing investor-owned utilities to issue securitized bonds related to the retirement of coal-fired generating facilities to qualified investors.

The ETA has a significant impact on PNM's future generation portfolio. In 2022, in compliance with the ETA, the NMED announced a new rulemaking, Carbon Dioxide Emission Standards for Electric Generating Facilities, to develop carbon emission standards for new and existing electric coal-fired generating facilities. In 2022, the rule was passed which adopts new carbon emission standards for new and existing coal-fired power plants. In compliance with the ETA, PNM filed its first $CO_2$ Emissions Measurement and Compliance Annual Report on March 14, 2025.

In 2020, the NMPRC approved PNM's San Juan abandonment application and for the issuance of securitized bonds consistent with the requirements of the ETA and in 2023 PNM issued the ETBC I Securitized Bonds. PNM cannot predict the full impact of the ETA with respect to Four Corners.

The State of California has enacted comprehensive climate-related disclosure laws that will require large entities doing business in the state to measure and disclose Scope 1 and Scope 2 GHG emissions beginning in 2026, Scope 3 GHG emissions beginning in 2027, and to publish biennial reports detailing climate-related financial risk beginning in January 2026. The State of California released proposed regulations in December 2025 with comments due in January 2026. The Company is closely monitoring developments to determine if any TXNM entity would be required to make disclosures under California law and the nature of any such required disclosures.

*International Accords*

The United Nations Framework Convention on Climate Change ("UNFCCC") is an international environmental treaty that was negotiated at the 1992 United Nations Conference on Environment and Development (informally known as the Earth Summit) and entered into force in March 1994. The objective of the treaty is to "stabilize greenhouse gas concentrations in the atmosphere at a level that would prevent dangerous anthropogenic interference with the climate system." Parties to the

Table of Contents

UNFCCC, including the U.S., have been meeting annually in Conferences of the Parties ("COP") to assess progress in meeting the objectives of the UNFCCC.

In 2015, the Paris Agreement was finalized during the 2015 COP. The aim of the Paris Agreement is to limit global temperature rise to two degrees Celsius above pre-industrial levels. The agreement, which was agreed to by approximately 200 parties, requires that countries submit INDCs. INDCs reflect national targets and actions that arise out of national policies and elements relating to oversight, guidance and coordination of actions to reduce emissions by all countries. In 2017, President Trump announced that the U.S. would withdraw from the Paris Agreement. As a result of the President's notice to the United Nations, the U.S. officially withdrew from the Paris Agreement on November 4, 2020. On January 20, 2021, President Biden signed an instrument that will allow the U.S. to rejoin the Paris Agreement. The instrument was deposited with the United Nations on January 21, 2021, and the U.S. officially became a party to the Paris Agreement on February 19, 2021. On January 20, 2025, President Trump signed an executive order entitled "Putting America First in International Environmental Agreements," directing the United States Ambassador to the United Nations to immediately submit formal written notification of the United States' withdrawal from the Paris Agreement and any other agreement, pact, accord, or similar commitment made under the United Nations Framework Convention on Climate Change.

PNM has calculated GHG reductions that would result from scenarios that capture PNM's retirement of its share of the SJGS in 2022 and assume exiting Four Corners in 2031 and PNM has set a goal to have a 100% carbon-free generating portfolio by 2040. Achieving our goal of carbon-free by 2040 is dependent on balancing reliability, cost-considerations, and maturity of emerging technologies. While the Company has not conducted an independent 2 Degree Scenario analysis, our commitment to becoming 100% carbon-free produces a carbon emissions reduction pathway that tracks within the ranges of climate scenario pathways that are consistent with limiting the global warming average to less than 2 degrees Celsius. In addition, as an investor-owned utility operating in the state of New Mexico, PNM is required to comply with the ETA, which requires utilities' generating portfolio be 100% carbon-free by 2045. The requirements of the ETA and the Company's goal compare favorably to the U.S. INDC of 50% to 52% carbon emissions reduction by 2030.

PNM will continue to monitor the United States' move to withdraw from the Paris Agreement and other parties' involvement in these types of international accords, but the potential impact that such accords may have on the Company cannot be determined at this time.

*Assessment of Legislative/Regulatory Impacts*

The Company has assessed, and continues to assess, the impacts of climate change legislation and regulation on its business. This assessment is ongoing and future changes arising out of the legislative or regulatory process could impact the assessment significantly. PNM's assessment includes assumptions regarding specific GHG limits; the timing of implementation of these limits; the possibility of a market-based trading program, including the associated costs and the availability of emission credits or allowances; the development of emission reduction and/or renewable energy technologies; and provisions for cost containment. Moreover, the assessment assumes various market reactions such as the price of coal and gas and regional plant economics. These assumptions are, at best, preliminary and speculative. However, based upon these assumptions, the enactment of climate change legislation or regulation could, among other things, result in significant compliance costs, including large capital expenditures by PNM, and could jeopardize the Company's reputation as well as the economic viability of certain generating facilities. The ultimate consequences of increased stakeholder scrutiny related to climate change and environmental regulation could lead to increased costs to customers and affect results of operations, cash flows, and financial condition if the incurred costs are not fully recovered through regulated rates. Higher rates could also contribute to reduced usage of electricity. PNM's assessment process is evolving and is too speculative at this time for a meaningful prediction of the long-term financial impact.

**Transmission Issues**

At any given time, FERC has various notices of inquiry and rulemaking dockets related to transmission issues pending. Such actions may lead to changes in FERC administrative rules or ratemaking policy but have no time frame in which action must be taken or a docket closed with no further action. Further, such notices and rulemaking dockets do not apply strictly to PNM but will have industry-wide effects in that they will apply to all FERC-regulated entities. PNM monitors and often submits comments taking a position in such notices and rulemaking dockets or may join in larger group responses. PNM often cannot determine the full impact of a proposed rule and policy change until the final determination is made by FERC and PNM is unable to predict the outcome of these matters.

**Other Matters**

See Notes 11 and 12 herein and Notes 16 and 17 of the Notes to Consolidated Financial Statements in the 2025 Annual Reports on Form 10-K for a discussion of commitments and contingencies and rate and regulatory matters.

## CRITICAL ACCOUNTING POLICIES AND ESTIMATES

The preparation of financial statements in accordance with GAAP requires Company management to select and apply accounting policies that best provide the framework to report the results of operations and financial position for TXNM, PNM, and TNMP. The selection and application of those policies require management to make difficult, subjective, and/or complex judgments concerning reported amounts of revenue and expenses during the reporting period and the reported amounts of assets and liabilities at the date of the financial statements. As a result, there exists the likelihood that materially different amounts would be reported under different conditions or using different assumptions.

As of June 30, 2026, there have been no significant changes with regard to the critical accounting policies disclosed in TXNM's, PNM's, and TNMP's 2025 Annual Reports on Forms 10-K. The policies disclosed included regulatory accounting, impairments, decommissioning and reclamation costs, pension and other postretirement benefits, accounting for contingencies, and income taxes.

### *MD&A FOR TNMP*

## RESULTS OF OPERATIONS

TNMP operates in only one reportable segment, as presented above in Results of Operations for TXNM.

### *MD&A FOR PNM*

## RESULTS OF OPERATIONS

PNM operates in only one reportable segment, as presented above in Results of Operations for TXNM.

## DISCLOSURE REGARDING FORWARD LOOKING STATEMENTS

Statements made in this filing that relate to future events or TXNM's, PNM's, or TNMP's expectations, projections, estimates, intentions, goals, targets, and strategies are made pursuant to the Private Securities Litigation Reform Act of 1995. Readers are cautioned that all forward-looking statements are based upon current expectations and estimates and apply only as of the date of this report. TXNM, PNM, and TNMP assume no obligation to update this information.

Because actual results may differ materially from those expressed or implied by these forward-looking statements, TXNM, PNM, and TNMP caution readers not to place undue reliance on these statements. TXNM's, PNM's, and TNMP's business, financial condition, cash flows, and operating results are influenced by many factors, which are often beyond their control, that can cause actual results to differ from those expressed or implied by the forward-looking statements. These factors, which are neither presented in order of importance nor weighted, include:

- The failure of Parent to obtain any equity, debt, or other financing necessary to complete the Merger
- The expected timing and likelihood of completion of the pending Merger, including the timing, receipt and terms and conditions of any required governmental and regulatory approvals of the pending Merger that could reduce anticipated benefits or cause the parties to abandon the transaction
- The occurrence of any event, change or other circumstances that could give rise to the termination of the Merger Agreement, including in circumstances requiring TXNM to pay a termination fee
- The receipt of an unsolicited offer from another party to acquire our assets or capital stock that could interfere with the Merger
- The outcome of any legal proceedings, regulatory proceedings, or enforcement matters that may be instituted relating to the Merger
- Risks related to disruption of management time from ongoing business operations due to the proposed Merger
- The risk that the proposed transaction and its announcement could have an adverse effect on the ability of TXNM to retain and hire key personnel and maintain relationships with its customers and suppliers, and on its operating results and businesses generally
- The announcement and pendency of the Merger, during which TXNM is subject to certain operating restrictions, could have an adverse effect on TXNM's businesses, results of operations, financial condition or cash flows
- The costs incurred to consummate the Merger
- The risk that the price of TXNM's common stock may fluctuate during the pendency of the proposed transaction and may decline significantly if the proposed transaction is not completed
- The ability of PNM and TNMP to recover costs and earn allowed returns in regulated jurisdictions and the impact on service levels for PNM customers if the ultimate outcomes do not provide for the recovery of costs and operating and capital expenditures, as well as other impacts of federal or state regulatory and judicial actions
- The ability of the Company to successfully forecast and manage its operating and capital expenditures, including aligning expenditures with the revenue levels resulting from the ultimate outcomes of regulatory proceedings
- Uncertainty surrounding the status of PNM's participation in jointly-owned generation projects

Table of Contents

- Uncertainty regarding the requirements and related costs of decommissioning power plants and reclamation of coal mines, as well as the ability to recover those costs from customers, including the potential impacts of current and future regulatory proceedings
- The impacts on the electricity usage of customers and consumers due to performance of state, regional, and national economies, energy efficiency measures, weather, seasonality, alternative sources of power, advances in technology, and other changes in supply and demand
- Uncertainty related to the potential for regulatory orders, legislation or rulemakings that provide for municipalization of utility assets or public ownership of utility assets, including generation resources, or which would delay or otherwise impact the procurement of necessary resources in a timely manner
- The Company's ability to maintain its debt, including convertible debt, and access the financial markets in order to repay or refinance debt as it comes due and for ongoing operations and construction expenditures due to disruptions in the capital or credit markets, actions by ratings agencies, and fluctuations in interest rates resulting from any negative impacts from regulatory proceedings, actions by the Federal Reserve, entry into the Merger Agreement, geopolitical activity, including tariffs, or the risk of wildfires and storms
- The risks associated with the cost and completion of generation, transmission, distribution, and other projects, including uncertainty related to regulatory approvals and cost recovery, the ability of counterparties to meet their obligations under certain arrangements (including renewable energy resources, approved PPAs and ESAs), and supply chain or other outside support services that may be disrupted
- The potential unavailability of cash from TXNM's subsidiaries due to regulatory, statutory, or contractual restrictions or subsidiary earnings or cash flows
- The performance of generating units, transmission systems, and distribution systems, which could be negatively affected by operational issues, fuel quality and supply chain issues (disruptions), unplanned outages, extreme weather conditions, wildfires, storms, terrorism, cybersecurity breaches, and other catastrophic events, including the costs the Company may incur to repair its facilities and/or the liabilities the Company may incur to third parties in connection with such issues beyond the extent of insurance coverage
- State and federal regulation or legislation relating to environmental matters and renewable energy requirements, the resultant costs of compliance, and other impacts on the operations and economic viability of PNM's generating plants
- State and federal regulatory, legislative, executive, and judicial decisions and actions on ratemaking, tariffs, and taxes, including guidance related to the interpretation of changes in tax laws, the Inflation Reduction Act, the Infrastructure Investment and Jobs Act of 2021, the OBBBA, and other matters including a government shutdown and the cancellation of grants or related funding
- Risks related to climate change, including potential financial and reputational risks resulting from increased stakeholder scrutiny related to climate change, litigation, legislative and regulatory efforts to limit GHG, including the impacts of the ETA
- Employee workforce factors, including cost control efforts and issues arising out of collective bargaining agreements and labor negotiations with union employees
- Variability of prices and volatility and liquidity in the wholesale power and natural gas markets, including the impacts to transmission margins
- Changes in price and availability of fuel and water supplies, including the ability of the mine supplying coal to Four Corners and the companies involved in supplying nuclear fuel to provide adequate quantities of fuel
- Regulatory, financial, and operational risks inherent in the operation of nuclear facilities, including spent fuel disposal uncertainties
- The impacts of decreases in the values of marketable securities maintained in trusts to provide for decommissioning, reclamation, pension benefits, and other postretirement benefits, including potential increased volatility resulting from actions by the Federal Reserve to address inflationary concerns, and international developments
- Uncertainty surrounding counterparty performance and credit risk, including the ability of counterparties to supply fuel and perform reclamation activities and impacts to financial support provided to facilitate reclamation and decommissioning at SJGS
- The effectiveness of risk management regarding commodity transactions and counterparty risk
- The outcome of legal proceedings, including the extent of insurance coverage
- Changes in applicable accounting principles or policies

Any material changes to risk factors occurring after the filing of TXNM's, PNM's, and TNMP's 2025 Annual Reports on Form 10-K are disclosed in Item 1A, Risk Factors, in Part II of this Form 10-Q.

For information about the risks associated with the use of derivative financial instruments, see Item 3. "Quantitative and Qualitative Disclosures About Market Risk."

**SECURITIES ACT DISCLAIMER**

Certain securities described or cross-referenced in this report have not been registered under the Securities Act, or any state securities laws and may not be reoffered or sold in the United States absent registration or an applicable exemption from the registration requirements of the Securities Act and applicable state securities laws. This Form 10-Q does not constitute an offer to sell or the solicitation of an offer to buy any securities.

**WEBSITES**

The TXNM website, www.txnmenergy.com, is an important source of Company information. New or updated information for public access is routinely posted. TXNM encourages analysts, investors, and other interested parties to register on the website to automatically receive Company information by e-mail. This information includes news releases, notices of webcasts, and filings with the SEC. Participants will not receive information that was not requested and can unsubscribe at any time. Our corporate internet addresses are:

- TXNM: www.txnmenergy.com
- PNM: www.pnm.com
- TNMP: www.tnmp.com

TXNM's corporate website includes a dedicated section providing key environmental and other information related to PNM's and TNMP's operations, including information that collectively demonstrates the Company's commitment to sustainability. This information highlights plans for PNM to be coal-free no later than 2031 and to have a carbon-free generating portfolio by 2040.

The contents of these websites are not a part of this Form 10-Q. The SEC filings of TXNM, PNM, and TNMP, including annual reports on Form 10-K, quarterly reports on Form 10-Q, current reports on Form 8-K, and amendments to those reports filed or furnished pursuant to Section 13(a) or 15(d) of the Exchange Act, are accessible free of charge on the TXNM website as soon as reasonably practicable after they are filed with, or furnished to, the SEC. Reports filed with the SEC are available on its website, www.sec.gov. These reports are also available in print upon request from TXNM free of charge.

Also available on the Company's website at https://www.txnmenergy.com/sustainability/governance/governance-documents.aspx and in print upon request from any shareholder are TXNM's:

- Corporate Governance Principles
- Code of Ethics (*Do the Right Thing – Principles of Business Conduct; Supplier Code of Conduct*)
- Charters of the Audit and Ethics Committee, Nominating and Governance Committee, Compensation and Human Resources Committee, and Finance Committee
- Restated Articles of Incorporation and Bylaws

The Company will post amendments to or waivers from its code of ethics (to the extent applicable to the Company's executive officers and directors) on its website.

**ITEM 3. QUANTITATIVE AND QUALITATIVE DISCLOSURES ABOUT MARKET RISK**

The Company manages the scope of its various forms of market risk through a comprehensive set of policies and procedures with oversight by senior level management through the Risk Management Committee ("RMC"). The Board's Finance Committee sets the risk limit parameters. The RMC has oversight over the risk control organization. The RMC is assigned responsibility for establishing and enforcing the policies, procedures, and limits and evaluating the risks inherent in proposed transactions on an enterprise-wide basis.

The RMC's responsibilities include:

- Establishing policies regarding risk tolerance levels and activities in each of the business segments
- Approving new types of derivatives entered into for marketing and hedging
- Reviewing and approving hedging risk activities
- Establishing policies regarding counterparty credit exposure and limits
- Authorizing and delegating transaction limits
- Reviewing and approving controls and procedures for derivative activities
- Reviewing and approving models and assumptions used to calculate mark-to-market and market risk exposure
- Proposing risk limits to the Board's Finance Committee for its approval
- Reporting to the Board's Audit and Finance Committees on these activities

To the extent an open position exists, fluctuating commodity prices, interest rates, equity prices, and economic conditions can impact financial results and financial position, either favorably or unfavorably. As a result, the Company cannot predict with certainty the impact that its risk management decisions may have on its businesses, operating results, or financial position.

**Commodity Risk**

Information concerning accounting for derivatives and the risks associated with commodity contracts is set forth in Note 7, including a summary of the fair values of mark-to-market energy related derivative contracts included in the Condensed

Table of Contents

Consolidated Balance Sheets. During the six months ended June 30, 2026, and the year ended December 31, 2025, the Company had no commodity derivative instruments designated as cash flow hedging instruments.

Commodity contracts that met the definition of a derivative were recorded at fair value on the Condensed Consolidated Balance Sheets. In the six months ended June 30, 2026 and 2025, the effects of mark-to-market commodity derivative instruments had no impact to PNM's net earnings and zero and $3.2 million of fair value losses have been recorded as a regulatory asset.

PNM may be exposed to changes in the market prices of electricity and natural gas for the positions in its wholesale portfolio not covered by the FPPAC. The Company manages risks associated with market fluctuations by utilizing various commodity instruments that may qualify as derivatives, including futures, forwards, options, and swaps. PNM uses such instruments to hedge its exposure to changes in the market prices of electricity and natural gas. PNM also uses such instruments under an NMPRC approved hedging plan, from time-to-time, to manage fuel and purchased power costs related to customers covered by its FPPAC.

**Credit Risk**

The Company is exposed to credit risk from its retail and wholesale customers, as well as the counterparties to derivative instruments. The Company conducts counterparty risk analysis across business segments and uses a credit management process to assess the financial conditions of counterparties. The following table provides information related to credit exposure by the credit worthiness (credit rating) and concentration of credit risk for wholesale counterparties, all of which will mature in less than two years.

**Schedule of Credit Risk Exposure**

**June 30, 2026**

| Rating [1] | Credit Risk Exposure[2] | Number of Counter-parties >10% | Net Exposure of Counter-parties >10% |
|---|---|---|---|
| | | (Dollars in thousands) | |
| External ratings: | | | |
| Investment grade | $ 3,895 | 2 | $ 1,894 |
| Non-investment grade | — | — | — |
| Split ratings | — | — | — |
| Internal ratings: | | | |
| Investment grade | 1,029 | — | — |
| Non-investment grade | — | — | — |
| Total | $ 4,924 | | $ 1,894 |

(1) The rating "Investment Grade" is for counterparties, or a guarantor, with a minimum S&P rating of BBB- or Moody's rating of Baa3. The category "Internal Ratings – Investment Grade" includes those counterparties that are internally rated as investment grade in accordance with the guidelines established in the Company's credit policy.

(2) The Credit Risk Exposure is the gross credit exposure, including long-term contracts, forward sales, and short-term sales. The gross exposure captures the amounts from receivables/payables for realized transactions, delivered and unbilled revenues, and mark-to-market gains/losses. Gross exposures can be offset according to legally enforceable netting arrangements but are not reduced by posted credit collateral. At June 30, 2026, TXNM held no cash collateral to offset its credit exposure.

Net credit risk for the Company's largest counterparty as of June 30, 2026, was $1.3 million. Other investments have no significant counterparty credit risk.

**Interest Rate Risk**

The majority of PNM's and TNMP's long-term debt is fixed-rate debt, which does not expose earnings to adverse changes in market interest rates. PNM and TNMP earnings are exposed to adverse changes in market interest rates when long-term debt must be refinanced, repriced or redeemed. TXNM's debt and the revolving credit facilities of PNM and TNMP are exposed to interest rate risk to the extent variable interest rates continue to rise. The Company periodically makes plans to reduce its variable interest rate exposures through various instruments including fixed rate debt and equity and hedging arrangements and otherwise expects that it will be able to extend or replace variable rate debt under similar terms and conditions prior to their expirations. Variable interest rates under the TXNM, PNM, and TNMP revolving credit facilities, commercial paper notes, and term loans are based on SOFR.

Table of Contents

At July 24, 2026, variable rate debt balances and weighted average interest rates were as follows:

| Variable Rate Debt | Weighted Average Interest Rate | Balance Outstanding | Capacity |
|---|---|---|---|
| | | (In thousands) | |
| Short-term Debt: | | | |
| TXNM Revolving Credit Facility | 5.17 % | $ 200,100 | $ 300,000 |
| PNM Revolving Credit Facility | 4.93 | 180,000 | 400,000 |
| PNM New Mexico Credit Facility | 5.01 | 40,000 | 40,000 |
| TNMP Revolving Credit Facility | 4.55 | 107,000 | 300,000 |
| | | $ 527,100 | $ 1,040,000 |
| Long-term Debt: | | | |
| TXNM 2026 Term Loan | 5.02 % | 400,000 | |
| PNM 2026 Term Loan | 4.57 | 195,000 | |
| PNM November 2025 Term Loan | 4.58 | 120,000 | |
| | | $ 715,000 | |

The investments held by PNM in trusts for decommissioning and reclamation had an estimated fair value of $513.6 million at June 30, 2026, of which 7.9% were fixed-rate debt securities that subject PNM to risk of loss of fair value with increases in market interest rates. If interest rates were to increase by 50 basis points from their levels at June 30, 2026, the decrease in the fair value of the fixed-rate securities would be 0.36%, or $0.2 million.

PNM does not directly recover or return through rates any losses or gains on the securities, including equity investments discussed below, in the trusts for decommissioning and reclamation. However, the overall performance of these trusts does enter into the periodic determinations of expense and funding levels, which are factored into the rate making process to the extent applicable to regulated operations. PNM is at risk for shortfalls in funding of obligations due to investment losses, including those from the equity market risks discussed below, to the extent not ultimately recovered through rates charged to customers.

**Equity Market Risk**

The investments held by PNM in trusts for decommissioning and reclamation include certain equity securities at June 30, 2026. These equity securities expose PNM to losses in fair value should the market values of the underlying securities decline. Equity securities comprised 85% of the securities held by the trusts as of June 30, 2026. A hypothetical 10% decrease in equity prices would reduce the fair values of these funds by $43.7 million.

## ITEM 4. CONTROLS AND PROCEDURES

**Evaluation of disclosure controls and procedures**

As of the end of the period covered by this quarterly report, each of TXNM, PNM, and TNMP conducted an evaluation, under the supervision and with the participation of its management, including its Chief Executive Officer and Chief Financial Officer, of the effectiveness of the design and operation of the disclosure controls and procedures (as defined in Rules 13a-15(e) and 15d-15(e) under the Securities Exchange Act of 1934). Based upon this evaluation, the Chief Executive Officer and the Chief Financial Officer of each of TXNM, PNM, and TNMP concluded that the disclosure controls and procedures are effective.

**Changes in internal controls over financial reporting**

There have been no changes in each of TXNM's, PNM's, and TNMP's internal control over financial reporting (as such term is defined in Rules 13a-15(f) and 15d-15(f) under the Securities Exchange Act of 1934) during the quarter ended June 30, 2026, that have materially affected, or are reasonably likely to materially affect, each of TXNM's, PNM's, and TNMP's internal control over financial reporting.

Table of Contents

## PART II. OTHER INFORMATION

None

## ITEM 1. LEGAL PROCEEDINGS

See Notes 11 and 12 for information related to the following matters, for TXNM, PNM, and TNMP, incorporated in this item by reference.

**Note 11**

- TXNM – Merger Related Litigation

**Note 12**

- TXNM – Merger Related Regulatory Applications
- PNM – Integrated Resource Plans
- PNM – Grid Modernization Plan
- PNM - Transportation Electrification Program
- TNMP – Transmission Cost of Service Rates
- TNMP – Periodic Distribution Rate Adjustment

## ITEM 1A. RISK FACTORS

As of the date of this report, there have been no material changes with regard to the Risk Factors disclosed in TXNM's, PNM's, and TNMP's Annual Reports on Form 10-K for the year ended December 31, 2025.

## ITEM 5. OTHER INFORMATION

During the six months ended June 30, 2026, no director or officer (as defined by Rule 16a-1(f) of the Exchange Act) of the Company adopted or terminated a "Rule 10b5-1 trading arrangement" or "non-Rule 10b5-1 trading arrangement," as each term is defined in Item 408(a) of Regulation S-K.

## ITEM 6. EXHIBITS

| | | |
|---|---|---|
| 2.1 | TXNM | Agreement and Plan of Merger, dated as of May 18, 2025, by and among TXNM Energy, Inc., Troy ParentCo LLC and Troy Merger Sub Inc. (incorporated by reference to Exhibit 2.1 to TXNM's Current Report on Form 8-K filed May 19, 2025) |
| 2.2 | TXNM | Waiver, dated as of July 17, 2026, by and among TXNM Energy, Inc., Troy ParentCo LLC, and Troy Merger Sub Inc. (incorporated by reference to Exhibit 10.1 to TXNM's Current Report on Form 8-K filed July 20, 2026) |
| 2.3 | TXNM | Letter Agreement, dated as of July 17, 2026, by and among TXNM Energy, Inc., Troy ParentCo LLC, Troy Merger Sub Inc., and Troy TopCo LP (incorporated by reference to Exhibit 10.2 to TXNM's Current Report on Form 8-K filed July 20, 2026) |
| 3.1 | TXNM | Restated Articles of Incorporation of TXNM, as amended to date (incorporated by reference to Exhibit 3.1 to TXNM's Current Report on Form 8-K filed August 5, 2024) |
| 3.2 | PNM | Restated Articles of Incorporation of PNM, as amended through May 31, 2002 (incorporated by reference to Exhibit 3.1.1 to PNM's Quarterly Report on Form 10-Q for the quarter ended June 30, 2002) |
| 3.3 | TNMP | Articles of Incorporation of TNMP, as amended through July 7, 2005 (incorporated by reference to Exhibit 3.1.2 to TNMP's Quarterly Report on Form 10-Q for the quarter ended June 30, 2005) |
| 3.4 | TXNM | Bylaws of TXNM, with all amendments to and including August 2, 2024 (incorporated by reference to Exhibit 3.2 to TXNM's Current Report on Form 8-K filed August 5, 2024) |
| 3.5 | PNM | Bylaws of PNM, with all amendments to and including July 1, 2022 (incorporated by reference to Exhibit 3.5 to PNM's Current Report on Form 8-K filed July 1, 2022) |
| 3.6 | TNMP | Bylaws of TNMP, with all amendments to and including June 18, 2013 (incorporated by reference to Exhibit 3.6 to TNMP's Current Report on Form 8-K filed June 20, 2013) |
| 10.1 | TXNM | Term Loan Agreement, dated July 17, 2026, by and among TXNM Energy, Inc., the lenders party thereto and Wells Fargo Bank, National Association, as Administrative Agent (incorporated by reference to Exhibit 10.3 to TXNM's Current Report on Form 8-K filed July 20, 2026) |

Table of Contents

| | | |
|---|---|---|
| 10.2 | PNM | Term Loan Agreement, dated July 21, 2026, among Public Service Company of New Mexico, the lender parties thereto and Canadian Imperial Bank of Commerce, New York Branch, as Administrative Agent (incorporated by reference to Exhibit 10.1 to PNM's Current Report on Form 8-K filed July 21, 2026) |
| 31.1 | TXNM | Chief Executive Officer Certification Pursuant to Section 302 of the Sarbanes-Oxley Act of 2002 |
| 31.2 | TXNM | Chief Financial Officer Certification Pursuant to Section 302 of the Sarbanes-Oxley Act of 2002 |
| 31.3 | PNM | Chief Executive Officer Certification Pursuant to Section 302 of the Sarbanes-Oxley Act of 2002 |
| 31.4 | PNM | Chief Financial Officer Certification Pursuant to Section 302 of the Sarbanes-Oxley Act of 2002 |
| 31.5 | TNMP | Chief Executive Officer Certification Pursuant to Section 302 of the Sarbanes-Oxley Act of 2002 |
| 31.6 | TNMP | Chief Financial Officer Certification Pursuant to Section 302 of the Sarbanes-Oxley Act of 2002 |
| 32.1 | TXNM | Chief Executive Officer and Chief Financial Officer Certification Pursuant to Section 906 of the Sarbanes-Oxley Act of 2002 |
| 32.2 | PNM | Chief Executive Officer and Chief Financial Officer Certification Pursuant to Section 906 of the Sarbanes-Oxley Act of 2002 |
| 32.3 | TNMP | Chief Executive Officer and Chief Financial Officer Certification Pursuant to Section 906 of the Sarbanes-Oxley Act of 2002 |
| 101.INS | TXNM, PNM, and TNMP | XBRL Instance Document - The instance document does not appear in the interactive data file because XBRL tags are embedded within the Inline XBRL document |
| 101.SCH | TXNM, PNM, and TNMP | Inline XBRL Taxonomy Extension Schema Document |
| 101.CAL | TXNM, PNM, and TNMP | Inline XBRL Taxonomy Extension Calculation Linkbase Document |
| 101.DEF | TXNM, PNM, and TNMP | Inline XBRL Taxonomy Extension Definition Linkbase Document |
| 101.LAB | TXNM, PNM, and TNMP | Inline XBRL Taxonomy Extension Label Linkbase Document |
| 101.PRE | TXNM, PNM, and TNMP | Inline XBRL Taxonomy Extension Presentation Linkbase Document |
| 104 | TXNM, PNM, and TNMP | Cover Page Inline XBRL File (included in Exhibits 101) |

Table of Contents

**SIGNATURE**

Pursuant to the requirements of the Securities Exchange Act of 1934, the registrants have duly caused this report to be signed on their behalf by the undersigned thereunto duly authorized.

**TXNM ENERGY, INC.**
**PUBLIC SERVICE COMPANY OF NEW MEXICO**
**TEXAS-NEW MEXICO POWER COMPANY**

(Registrants)

Date: July 31, 2026

/s/ Gerald R. Bischoff

Gerald R. Bischoff

Vice President and Corporate Controller

(Officer duly authorized to sign this report)

TXNM Energy, Inc.
414 Silver Ave. SW
Albuquerque, NM 87102-3289

**EXHIBIT 31.1**
**CERTIFICATION**

I, Joseph D. Tarry, certify that:

1. I have reviewed this Quarterly Report on Form 10-Q of TXNM Energy, Inc.;

2. Based on my knowledge, this report does not contain any untrue statement of a material fact or omit to state a material fact necessary to make the statements made, in light of the circumstances under which such statements were made, not misleading with respect to the period covered by this report;

3. Based on my knowledge, the financial statements, and other financial information included in this report, fairly present in all material respects the financial condition, results of operations and cash flows of the registrant as of, and for, the periods presented in this report;

4. The registrant's other certifying officer and I are responsible for establishing and maintaining disclosure controls and procedures (as defined in Exchange Act Rules 13a-15(e) and 15d-15(e)) and internal control over financial reporting (as defined in Exchange Act Rules 13a-15(f) and 15d-15(f)) for the registrant and have:

    a) Designed such disclosure controls and procedures, or caused such disclosure controls and procedures to be designed under our supervision, to ensure that material information relating to the registrant, including its consolidated subsidiaries, is made known to us by others within those entities, particularly during the period in which this report is being prepared;

    b) Designed such internal control over financial reporting, or caused such internal control over financial reporting to be designed under our supervision, to provide reasonable assurance regarding the reliability of financial reporting and the preparation of financial statements for external purposes in accordance with generally accepted accounting principles;

    c) Evaluated the effectiveness of the registrant's disclosure controls and procedures and presented in this report our conclusions about the effectiveness of the disclosure controls and procedures, as of the end of the period covered by this report based on such evaluation; and

    d) Disclosed in this report any change in the registrant's internal control over financial reporting that occurred during the registrant's most recent fiscal quarter (each registrant's fourth fiscal quarter in the case of an annual report) that has materially affected, or is reasonably likely to materially affect, the registrant's internal control over financial reporting; and

5. The registrant's other certifying officer and I have disclosed, based on our most recent evaluation of internal control over financial reporting, to the registrant's auditors and the audit committee of the registrant's board of directors (or persons performing the equivalent functions):

    a) All significant deficiencies and material weaknesses in the design or operation of internal controls over financial reporting which are reasonably likely to adversely affect the registrant's ability to record, process, summarize and report financial information; and

    b) Any fraud, whether or not material, that involves management or other employees who have a significant role in the registrant's internal control over financial reporting.

Date: July 31, 2026

By: /s/ Joseph D. Tarry
Joseph D. Tarry
President and Chief Executive Officer
TXNM Energy, Inc.

TXNM Energy, Inc.
414 Silver Ave. SW
Albuquerque, NM 87102-3289

**EXHIBIT 31.2**
**CERTIFICATION**

I, Henry E. Monroy, certify that:

1. I have reviewed this Quarterly Report on Form 10-Q of TXNM Energy, Inc.;

2. Based on my knowledge, this report does not contain any untrue statement of a material fact or omit to state a material fact necessary to make the statements made, in light of the circumstances under which such statements were made, not misleading with respect to the period covered by this report;

3. Based on my knowledge, the financial statements, and other financial information included in this report, fairly present in all material respects the financial condition, results of operations and cash flows of the registrant as of, and for, the periods presented in this report;

4. The registrant's other certifying officer and I are responsible for establishing and maintaining disclosure controls and procedures (as defined in Exchange Act Rules 13a-15(e) and 15d-15(e)) and internal control over financial reporting (as defined in Exchange Act Rules 13a-15(f) and 15d-15(f)) for the registrant and have:

    a) Designed such disclosure controls and procedures, or caused such disclosure controls and procedures to be designed under our supervision, to ensure that material information relating to the registrant, including its consolidated subsidiaries, is made known to us by others within those entities, particularly during the period in which this report is being prepared;

    b) Designed such internal control over financial reporting, or caused such internal control over financial reporting to be designed under our supervision, to provide reasonable assurance regarding the reliability of financial reporting and the preparation of financial statements for external purposes in accordance with generally accepted accounting principles;

    c) Evaluated the effectiveness of the registrant's disclosure controls and procedures and presented in this report our conclusions about the effectiveness of the disclosure controls and procedures, as of the end of the period covered by this report based on such evaluation; and

    d) Disclosed in this report any change in the registrant's internal control over financial reporting that occurred during the registrant's most recent fiscal quarter (each registrant's fourth fiscal quarter in the case of an annual report) that has materially affected, or is reasonably likely to materially affect, the registrant's internal control over financial reporting; and

5. The registrant's other certifying officer and I have disclosed, based on our most recent evaluation of internal control over financial reporting, to the registrant's auditors and the audit committee of the registrant's board of directors (or persons performing the equivalent functions):

    a) All significant deficiencies and material weaknesses in the design or operation of internal controls over financial reporting which are reasonably likely to adversely affect the registrant's ability to record, process, summarize and report financial information; and

    b) Any fraud, whether or not material, that involves management or other employees who have a significant role in the registrant's internal control over financial reporting.

Date: July 31, 2026

By: /s/ Henry E. Monroy
Henry E. Monroy
Senior Vice President and Chief Financial Officer
TXNM Energy, Inc.

Public Service Company of New Mexico
414 Silver Ave. SW
Albuquerque, NM 87102-3289

**EXHIBIT 31.3**
**CERTIFICATION**

I, Joseph D. Tarry, certify that:

1. I have reviewed this Quarterly Report on Form 10-Q of Public Service Company of New Mexico;

2. Based on my knowledge, this report does not contain any untrue statement of a material fact or omit to state a material fact necessary to make the statements made, in light of the circumstances under which such statements were made, not misleading with respect to the period covered by this report;

3. Based on my knowledge, the financial statements, and other financial information included in this report, fairly present in all material respects the financial condition, results of operations and cash flows of the registrant as of, and for, the periods presented in this report;

4. The registrant's other certifying officer and I are responsible for establishing and maintaining disclosure controls and procedures (as defined in Exchange Act Rules 13a-15(e) and 15d-15(e)) and internal control over financial reporting (as defined in Exchange Act Rules 13a-15(f) and 15d-15(f)) for the registrant and have:

    a) Designed such disclosure controls and procedures, or caused such disclosure controls and procedures to be designed under our supervision, to ensure that material information relating to the registrant, including its consolidated subsidiaries, is made known to us by others within those entities, particularly during the period in which this report is being prepared;

    b) Designed such internal control over financial reporting, or caused such internal control over financial reporting to be designed under our supervision, to provide reasonable assurance regarding the reliability of financial reporting and the preparation of financial statements for external purposes in accordance with generally accepted accounting principles;

    c) Evaluated the effectiveness of the registrant's disclosure controls and procedures and presented in this report our conclusions about the effectiveness of the disclosure controls and procedures, as of the end of the period covered by this report based on such evaluation; and

    d) Disclosed in this report any change in the registrant's internal control over financial reporting that occurred during the registrant's most recent fiscal quarter (each registrant's fourth fiscal quarter in the case of an annual report) that has materially affected, or is reasonably likely to materially affect, the registrant's internal control over financial reporting; and

5. The registrant's other certifying officer and I have disclosed, based on our most recent evaluation of internal control over financial reporting, to the registrant's auditors and the audit committee of the registrant's board of directors (or persons performing the equivalent functions):

    a) All significant deficiencies and material weaknesses in the design or operation of internal controls over financial reporting which are reasonably likely to adversely affect the registrant's ability to record, process, summarize and report financial information; and

    b) Any fraud, whether or not material, that involves management or other employees who have a significant role in the registrant's internal control over financial reporting.

Date: July 31, 2026

By: /s/ Joseph D. Tarry

Joseph D. Tarry
President and Chief Executive Officer
Public Service Company of New Mexico

Public Service Company of New Mexico
414 Silver Ave. SW
Albuquerque, NM 87102-3289

**EXHIBIT 31.4**
**CERTIFICATION**

I, Henry E. Monroy, certify that:

1. I have reviewed this Quarterly Report on Form 10-Q of Public Service Company of New Mexico;

2. Based on my knowledge, this report does not contain any untrue statement of a material fact or omit to state a material fact necessary to make the statements made, in light of the circumstances under which such statements were made, not misleading with respect to the period covered by this report;

3. Based on my knowledge, the financial statements, and other financial information included in this report, fairly present in all material respects the financial condition, results of operations and cash flows of the registrant as of, and for, the periods presented in this report;

4. The registrant's other certifying officer and I are responsible for establishing and maintaining disclosure controls and procedures (as defined in Exchange Act Rules 13a-15(e) and 15d-15(e)) and internal control over financial reporting (as defined in Exchange Act Rules 13a-15(f) and 15d-15(f)) for the registrant and have:

    a) Designed such disclosure controls and procedures, or caused such disclosure controls and procedures to be designed under our supervision, to ensure that material information relating to the registrant, including its consolidated subsidiaries, is made known to us by others within those entities, particularly during the period in which this report is being prepared;

    b) Designed such internal control over financial reporting, or caused such internal control over financial reporting to be designed under our supervision, to provide reasonable assurance regarding the reliability of financial reporting and the preparation of financial statements for external purposes in accordance with generally accepted accounting principles;

    c) Evaluated the effectiveness of the registrant's disclosure controls and procedures and presented in this report our conclusions about the effectiveness of the disclosure controls and procedures, as of the end of the period covered by this report based on such evaluation; and

    d) Disclosed in this report any change in the registrant's internal control over financial reporting that occurred during the registrant's most recent fiscal quarter (each registrant's fourth fiscal quarter in the case of an annual report) that has materially affected, or is reasonably likely to materially affect, the registrant's internal control over financial reporting; and

5. The registrant's other certifying officer and I have disclosed, based on our most recent evaluation of internal control over financial reporting, to the registrant's auditors and the audit committee of the registrant's board of directors (or persons performing the equivalent functions):

    a) All significant deficiencies and material weaknesses in the design or operation of internal controls over financial reporting which are reasonably likely to adversely affect the registrant's ability to record, process, summarize and report financial information; and

    b) Any fraud, whether or not material, that involves management or other employees who have a significant role in the registrant's internal control over financial reporting.

Date: July 31, 2026

By: /s/ Henry E. Monroy
Henry E. Monroy
Senior Vice President and Chief Financial Officer

Public Service Company of New Mexico

Texas-New Mexico Power Company
577 N. Garden Ridge Blvd.
Lewisville, Texas 75067

**EXHIBIT 31.5**
**CERTIFICATION**

I, Joseph D. Tarry, certify that:

1. I have reviewed this Quarterly Report on Form 10-Q of Texas-New Mexico Power Company;

2. Based on my knowledge, this report does not contain any untrue statement of a material fact or omit to state a material fact necessary to make the statements made, in light of the circumstances under which such statements were made, not misleading with respect to the period covered by this report;

3. Based on my knowledge, the financial statements, and other financial information included in this report, fairly present in all material respects the financial condition, results of operations and cash flows of the registrant as of, and for, the periods presented in this report;

4. The registrant's other certifying officer and I are responsible for establishing and maintaining disclosure controls and procedures (as defined in Exchange Act Rules 13a-15(e) and 15d-15(e)) and internal control over financial reporting (as defined in Exchange Act Rules 13a-15(f) and 15d-15(f)) for the registrant and have:

    a) Designed such disclosure controls and procedures, or caused such disclosure controls and procedures to be designed under our supervision, to ensure that material information relating to the registrant, including its consolidated subsidiaries, is made known to us by others within those entities, particularly during the period in which this report is being prepared;

    b) Designed such internal control over financial reporting, or caused such internal control over financial reporting to be designed under our supervision, to provide reasonable assurance regarding the reliability of financial reporting and the preparation of financial statements for external purposes in accordance with generally accepted accounting principles;

    c) Evaluated the effectiveness of the registrant's disclosure controls and procedures and presented in this report our conclusions about the effectiveness of the disclosure controls and procedures, as of the end of the period covered by this report based on such evaluation; and

    d) Disclosed in this report any change in the registrant's internal control over financial reporting that occurred during the registrant's most recent fiscal quarter (each registrant's fourth fiscal quarter in the case of an annual report) that has materially affected, or is reasonably likely to materially affect, the registrant's internal control over financial reporting; and

5. The registrant's other certifying officer and I have disclosed, based on our most recent evaluation of internal control over financial reporting, to the registrant's auditors and the audit committee of the registrant's board of directors (or persons performing the equivalent functions):

    a) All significant deficiencies and material weaknesses in the design or operation of internal controls over financial reporting which are reasonably likely to adversely affect the registrant's ability to record, process, summarize and report financial information; and

    b) Any fraud, whether or not material, that involves management or other employees who have a significant role in the registrant's internal control over financial reporting.

Date: July 31, 2026

By: /s/ Joseph D. Tarry

Joseph D. Tarry
Chief Executive Officer
Texas-New Mexico Power Company

Texas-New Mexico Power Company
577 N. Garden Ridge Blvd.
Lewisville, Texas 75067

**EXHIBIT 31.6**
**CERTIFICATION**

I, Henry E. Monroy, certify that:

1. I have reviewed this Quarterly Report on Form 10-Q of Texas-New Mexico Power Company;

2. Based on my knowledge, this report does not contain any untrue statement of a material fact or omit to state a material fact necessary to make the statements made, in light of the circumstances under which such statements were made, not misleading with respect to the period covered by this report;

3. Based on my knowledge, the financial statements, and other financial information included in this report, fairly present in all material respects the financial condition, results of operations and cash flows of the registrant as of, and for, the periods presented in this report;

4. The registrant's other certifying officer and I are responsible for establishing and maintaining disclosure controls and procedures (as defined in Exchange Act Rules 13a-15(e) and 15d-15(e)) and internal control over financial reporting (as defined in Exchange Act Rules 13a-15(f) and 15d-15(f)) for the registrant and have:

    a) Designed such disclosure controls and procedures, or caused such disclosure controls and procedures to be designed under our supervision, to ensure that material information relating to the registrant, including its consolidated subsidiaries, is made known to us by others within those entities, particularly during the period in which this report is being prepared;

    b) Designed such internal control over financial reporting, or caused such internal control over financial reporting to be designed under our supervision, to provide reasonable assurance regarding the reliability of financial reporting and the preparation of financial statements for external purposes in accordance with generally accepted accounting principles;

    c) Evaluated the effectiveness of the registrant's disclosure controls and procedures and presented in this report our conclusions about the effectiveness of the disclosure controls and procedures, as of the end of the period covered by this report based on such evaluation; and

    d) Disclosed in this report any change in the registrant's internal control over financial reporting that occurred during the registrant's most recent fiscal quarter (each registrant's fourth fiscal quarter in the case of an annual report) that has materially affected, or is reasonably likely to materially affect, the registrant's internal control over financial reporting; and

5. The registrant's other certifying officer and I have disclosed, based on our most recent evaluation of internal control over financial reporting, to the registrant's auditors and the audit committee of the registrant's board of directors (or persons performing the equivalent functions):

    a) All significant deficiencies and material weaknesses in the design or operation of internal controls over financial reporting which are reasonably likely to adversely affect the registrant's ability to record, process, summarize and report financial information; and

    b) Any fraud, whether or not material, that involves management or other employees who have a significant role in the registrant's internal control over financial reporting.

Date: July 31, 2026

By: /s/ Henry E. Monroy
Henry E. Monroy
Senior Vice President and Chief Financial Officer
Texas-New Mexico Power Company

TXNM Energy, Inc.
414 Silver Ave. SW
Albuquerque, NM 87102-3289
www.txnmenergy.com

**EXHIBIT 32.1**

**CERTIFICATION PURSUANT TO 18 U.S.C. § 1350, AS ADOPTED PURSUANT TO § 906 OF THE SARBANES-OXLEY ACT OF 2002**

In connection with the Quarterly Report on Form 10-Q for the period ended June 30, 2026, for TXNM Energy, Inc. ("Company"), as filed with the Securities and Exchange Commission on July 31, 2026 ("Report"), each of the undersigned officers of the Company certifies, pursuant to 18 U.S.C. §1350, as adopted pursuant to § 906 of the Sarbanes-Oxley Act of 2002, that:

(1) the Report fully complies with the requirements of § 13(a) or 15(d) of the Securities Exchange Act of 1934, as amended; and
(2) the information contained in the Report fairly presents, in all material respects, the financial condition and results of operations of the Company.

Date: July 31, 2026

By: /s/ Joseph D. Tarry
Joseph D. Tarry
President and Chief Executive Officer
TXNM Energy, Inc.

By: /s/ Henry E. Monroy
Henry E. Monroy
Senior Vice President and Chief Financial Officer
TXNM Energy, Inc.

Public Service Company of New Mexico
414 Silver Ave. SW
Albuquerque, NM 87102-3289

**EXHIBIT 32.2**

**CERTIFICATION PURSUANT TO 18 U.S.C. § 1350, AS ADOPTED PURSUANT TO § 906 OF THE SARBANES-OXLEY ACT OF 2002**

In connection with the Quarterly Report on Form 10-Q for the period ended June 30, 2026, for Public Service Company of New Mexico ("Company"), as filed with the Securities and Exchange Commission on July 31, 2026 ("Report"), each of the undersigned officers of the Company certifies, pursuant to 18 U.S.C. §1350, as adopted pursuant to § 906 of the Sarbanes-Oxley Act of 2002, that:

(1) the Report fully complies with the requirements of § 13(a) or 15(d) of the Securities Exchange Act of 1934, as amended; and
(2) the information contained in the Report fairly presents, in all material respects, the financial condition and results of operations of the Company.

Date: July 31, 2026

By: /s/ Joseph D. Tarry
Joseph D. Tarry
President and Chief Executive Officer
Public Service Company of New Mexico

By: /s/ Henry E. Monroy
Henry E. Monroy
Senior Vice President and Chief Financial Officer
Public Service Company of New Mexico

Texas-New Mexico Power Company
577 N. Garden Ridge Blvd.
Lewisville, Texas 75067

**EXHIBIT 32.3**

**CERTIFICATION PURSUANT TO 18 U.S.C. § 1350, AS ADOPTED PURSUANT TO § 906 OF THE SARBANES-OXLEY ACT OF 2002**

In connection with the Quarterly Report on Form 10-Q for the period ended June 30, 2026, for Texas-New Mexico Power Company ("Company"), as filed with the Securities and Exchange Commission on July 31, 2026 ("Report"), each of the undersigned officers of the Company certifies, pursuant to 18 U.S.C. §1350, as adopted pursuant to §906 of the Sarbanes-Oxley Act of 2002, that:

(1) the Report fully complies with the requirements of § 13(a) or 15(d) of the Securities Exchange Act of 1934, as amended; and
(2) the information contained in the Report fairly presents, in all material respects, the financial condition and results of operations of the Company.

Date: July 31, 2026

By: /s/ Joseph D. Tarry
Joseph D. Tarry
Chief Executive Officer
Texas-New Mexico Power Company

By: /s/ Henry E. Monroy
Henry E. Monroy
Senior Vice President and Chief Financial Officer
Texas-New Mexico Power Company

Schedule Q-4 Reports to the Securities and Exchange Commission

# December 31, 2025

Attachments to this document are available to the public and can be found at *https://www.txnmenergy.com/investors/financial-information/sec-filings.aspx* or can be retrieved from the NMPRC Records website.

Table of Contents

**UNITED STATES**
**SECURITIES AND EXCHANGE COMMISSION**
Washington, D.C. 20549

**FORM 10-K**

(Mark One)

☒ ANNUAL REPORT PURSUANT TO SECTION 13 OR 15(d) OF THE SECURITIES EXCHANGE ACT OF 1934

**For the fiscal year ended December 31, 2025**

☐ TRANSITION REPORT PURSUANT TO SECTION 13 OR 15(d) OF THE SECURITIES EXCHANGE ACT OF 1934

**For the transition period from _____ to _____**

Name of Registrant, State of Incorporation, Address Of Principal Executive Offices, Telephone Number, Commission File No., IRS Employer Identification No.

**TXNM Energy, Inc.**
(A New Mexico Corporation)
414 Silver Ave. SW
Albuquerque, New Mexico 87102-3289
Telephone Number - (505) 241-2700
Commission File No. - 001-32462
IRS Employer Identification No. - 85-0468296

**Public Service Company of New Mexico**
(A New Mexico Corporation)
414 Silver Ave. SW
Albuquerque, New Mexico 87102-3289
Telephone Number - (505) 241-2700
Commission File No. - 001-06986
IRS Employer Identification No. - 85-0019030

**Texas-New Mexico Power Company**
(A Texas Corporation)
577 N. Garden Ridge Blvd.
Lewisville, Texas 75067
Telephone Number - (972) 420-4189
Commission File No. - 002-97230
IRS Employer Identification No. - 75-0204070

---

Securities registered pursuant to Section 12(b) of the Act:

| Registrant | Title of each class | Trading Symbol(s) | Name of each exchange on which registered |
|---|---|---|---|
| TXNM Energy, Inc. | Common Stock, no par value | TXNM | New York Stock Exchange |

Securities registered pursuant to Section 12(g) of the Act:

| Registrant | Title of each class |
|---|---|
| Public Service Company of New Mexico | 1965 Series, 4.58% Cumulative Preferred Stock ($100 stated value without sinking fund) |

Indicate by checkmark whether each registrant is a well-known seasoned issuer, as defined in Rule 405 of the Securities Act.

| | | |
|---|---|---|
| TXNM Energy, Inc. ("TXNM") | Yes ☑ | No ☐ |
| Public Service Company of New Mexico ("PNM") | Yes ☐ | No ☑ |
| Texas-New Mexico Power Company ("TNMP") | Yes ☐ | No ☑ |

Indicate by checkmark if each registrant is not required to file reports pursuant to Section 13 or Section 15(d) of the Act.

| | | |
|---|---|---|
| TXNM | Yes ☐ | No ☑ |
| PNM | Yes ☐ | No ☑ |
| TNMP | Yes ☑ | No ☐ |

Indicate by checkmark whether each registrant (1) has filed all reports required to be filed by Section 13 or 15(d) of the Securities Exchange Act of 1934 during the preceding 12 months (or for such shorter period that the registrant was required to file such reports) and (2) has been subject to such filing requirements for the past 90 days.

| | | |
|---|---|---|
| TXNM | Yes ☑ | No ☐ |
| PNM | Yes ☑ | No ☐ |
| TNMP | Yes ☐ | No ☑ |

(NOTE: As a voluntary filer, not subject to the filing requirements, TNMP filed all reports under Section 13 or 15(d) of the Securities Exchange Act of 1934 during the preceding 12 months.)

Indicate by checkmark whether each registrant has submitted electronically every Interactive Data File required to be submitted pursuant to Rule 405 of Regulation S-T during the preceding 12 months (or for such shorter period that the registrant was required to submit such files).

| | | |
|---|---|---|
| TXNM | Yes ☑ | No ☐ |
| PNM | Yes ☑ | No ☐ |
| TNMP | Yes ☑ | No ☐ |

Indicate by checkmark whether each registrant is a large accelerated filer, an accelerated filer, a non-accelerated filer, smaller reporting company, or an emerging growth company. See the definitions of "large accelerated filer," "accelerated filer," "smaller reporting company," and "emerging growth company" in Rule 12b-2 of the Exchange Act.

| | Large accelerated filer | Accelerated filer | Non-accelerated filer | Smaller reporting company | Emerging growth company |
|---|---|---|---|---|---|
| TXNM | ☑ | ☐ | ☐ | ☐ | ☐ |
| | Large accelerated filer | Accelerated filer | Non-accelerated filer | Smaller reporting company | Emerging growth company |
| PNM | ☐ | ☐ | ☑ | ☐ | ☐ |
| | Large accelerated filer | Accelerated filer | Non-accelerated filer | Smaller reporting company | Emerging growth company |
| TNMP | ☐ | ☐ | ☑ | ☐ | ☐ |

If an emerging growth company, indicate by checkmarkif the registrant has elected not to use the extended transition period for complying with any new or revised financial accounting standards provided pursuant to Section 13(a) of the Exchange Act. £

Indicate by checkmarkwhether the registrant has filed a report on and attestation to its management's assessment of the effectiveness of its internal control over financial reporting under Section 404(b) of the Sarbanes-Oxley Act (15U.S.C. 7262(b)) by the registered public accounting firm that prepared or issued its audit report.

| | | | | |
|---|---|---|---|---|
| TXNM | Yes | ☑ | No | ☐ |
| PNM | Yes | ☐ | No | ☑ |
| TNMP | Yes | ☐ | No | ☑ |

If securities are registered pursuant to Section 12(b) of the Exchange Act, indicate by checkmarkwhether the financial statements of the registrant included in the filing reflect the correction of an error to previously issued financial statements. £

Indicate by checkmarkwhether any of those error corrections are restatements that require a recovery analysis of incentive-based compensation received by any of the registrant's executive officers during the relevant recovery period pursuant to Section 240.10D-1(b). £

Indicate by checkmarkwhether the registrants are a shell company (as defined in Rule 12b-2of the Exchange Act). Yes ☐ No ☑

As of February 13, 2026, shares of common stockoutstanding were:

| | |
|---|---|
| TXNM | 108,921,356 |
| PNM | 39,117,799 |
| TNMP | 6,358 |

On June 30, 2025, the aggregate market value of the voting common stockheld by non-affiliates of TXNM as computed by reference to the New YorkStockExchange composite transaction closing price of $56.32 per share reported by The Wall Street Journal, was $5,984,944,097. PNM and TNMP have no common stockheld by non-affiliates.

**PNM AND TNMP MEET THE CONDITIONS SET FORTH IN GENERAL INSTRUCTIONS (I) (1) (a) AND (b) OF FORM 10-K AND ARE THEREFORE FILING THIS FORM WITH THE REDUCED DISCLOSURE FORMAT PURSUANT TO GENERAL INSTRUCTION (I) (2).**

**DOCUMENTS INCORPORATED BY REFERENCE**

Portions of the following document are incorporated by reference into Part III of this report:

Proxy Statement to be filed by TXNM with the SEC pursuant to Regulation 14A relating to the annual meeting of shareholders of TXNM to be held on June 10, 2026

This combined Form 10-K is separately filed by TXNM, PNM, and TNMP. Information contained herein relating to any individual registrant is filed by such registrant on its own behalf. Each registrant makes no representation as to information relating to the other registrants. When this Form 10-K is incorporated by reference into any filing with the SEC made by TXNM, PNM, or TNMP, as a registrant, the portions of this Form 10-K that relate to each other registrant are not incorporated by reference therein.

Table of Contents

**TXNM ENERGY, INC. AND SUBSIDIARIES**
**PUBLIC SERVICE COMPANY OF NEW MEXICO AND SUBSIDIARIES**
**TEXAS-NEW MEXICO POWER COMPANY AND SUBSIDIARIES**

**INDEX**


| | Page |
|---|---|
| GLOSSARY | iii |
| **PART I** | |
| ITEM 1. BUSINESS | A - 1 |
| THE COMPANY | A - 1 |
| WEBSITES | A - 2 |
| OPERATIONS AND REGULATION | A - 2 |
| REGULATED OPERATIONS | |
| TNMP | A - 2 |
| PNM | A - 3 |
| CORPORATE AND OTHER | A - 4 |
| SOURCES OF POWER | A - 5 |
| FUEL | A - 7 |
| ENVIRONMENTAL MATTERS | A - 8 |
| COMPETITION | A - 8 |
| HUMAN CAPITAL RESOURCES | A - 8 |
| DISCLOSURE REGARDING FORWARD LOOKING STATEMENTS | A - 9 |
| SECURITIES ACT DISCLAIMER | A - 11 |
| ITEM 1A. RISK FACTORS | A - 11 |
| ITEM 1B. UNRESOLVED STAFF COMMENTS | A - 22 |
| ITEM 1C. CYBERSECURITY | A - 22 |
| ITEM 2. PROPERTIES | A - 23 |
| ITEM 3. LEGAL PROCEEDINGS | A - 23 |
| ITEM 4. MINE SAFETY DISCLOSURES | A - 24 |
| SUPPLEMENTAL ITEM – INFORMATION ABOUT EXECUTIVE OFFICERS OF TXNM ENERGY, INC. | A - 24 |
| **PART II** | |
| ITEM 5. MARKET FOR TXNM'S COMMON EQUITY, RELATED STOCKHOLDER MATTERS, AND ISSUER PURCHASES OF EQUITY SECURITIES | A - 25 |
| ITEM 6. [RESERVED] | A - 25 |
| ITEM 7. MANAGEMENT'S DISCUSSION AND ANALYSIS OF FINANCIAL CONDITION AND RESULTS OF OPERATIONS | A - 25 |
| ITEM 7A. QUANTITATIVE AND QUALITATIVE DISCLOSURE ABOUT MARKET RISK | A - 56 |
| ITEM 8. FINANCIAL STATEMENTS AND SUPPLEMENTARY DATA | B - 1 |
| ITEM 9. CHANGES IN AND DISAGREEMENTS WITH ACCOUNTANTS ON ACCOUNTING AND FINANCIAL DISCLOSURE | C - 1 |
| ITEM 9A. CONTROLS AND PROCEDURES | C - 1 |
| ITEM 9B. OTHER INFORMATION | C - 2 |
| ITEM 9C. DISCLOSURE REGARDING FOREIGN JURISDICTIONS THAT PREVENT INSPECTIONS | C - 2 |
| **PART III** | |
| ITEM 10. DIRECTORS, EXECUTIVE OFFICERS, AND CORPORATE GOVERNANCE | C - 2 |
| ITEM 11. EXECUTIVE COMPENSATION | C - 2 |
| ITEM 12. SECURITY OWNERSHIP OF CERTAIN BENEFICIAL OWNERS AND MANAGEMENT AND RELATED STOCKHOLDER MATTERS | C - 2 |
| ITEM 13. CERTAIN RELATIONSHIPS AND RELATED TRANSACTIONS AND DIRECTOR INDEPENDENCE | C - 2 |
| ITEM 14. PRINCIPAL ACCOUNTING FEES AND SERVICES | C - 2 |
| **PART IV** | |
| ITEM 15. EXHIBITS AND FINANCIAL STATEMENT SCHEDULES | D - 1 |
| ITEM 16. FORM 10-K SUMMARY | D - 12 |
| **SIGNATURES** | E - 1 |

Table of Contents

## GLOSSARY

**Definitions:**

| | |
|---|---|
| 2024 Rate Change | PNM's request for a general increase in electric rates filed with the NMPRC on December 5, 2022 using a calendar year 2024 FTY |
| 2025 Rate Request | PNM's request for a general increase in electric rates filed with the NMPRC on June 14, 2024 using a FTY beginning July 1, 2025 |
| 2026 Resource Application | PNM's October 25, 2023 application with the NMPRC for approval of resources to be available for the 2026 summer peak |
| ABCWUA | Albuquerque Bernalillo County Water Utility Authority |
| ABO | Accumulated Benefit Obligation |
| ACE Rule | Affordable Clean Energy Rule |
| AEP OnSite Partners | AEP OnSite Partners, LLC, a subsidiary of American Electric Power, Inc. |
| Afton | Afton Generating Station |
| AFUDC | Allowance for Funds Used During Construction |
| AMS | Advanced Meter System |
| AOCI | Accumulated Other Comprehensive Income |
| APBO | Accumulated Postretirement Benefit Obligation |
| APS | Arizona Public Service Company, the operator and a co-owner of PVNGS and Four Corners |
| ARO | Asset Retirement Obligation |
| ARP | Alternative Revenue Program |
| ASU | Accounting Standards Update |
| Avangrid | Avangrid, Inc., a New York corporation |
| Avangrid Merger | The merger of TXNM pursuant to the Merger Agreement, with TXNM surviving the Merger as a direct, wholly-owned subsidiary of Avangrid (Subsequently terminated December 31, 2023) |
| Avangrid Merger Agreement | The Agreement and Plan of Merger, dated October 20, 2020. (Subsequently terminated December 31, 2023) |
| BART | Best Available Retrofit Technology |
| Blackstone Infrastructure | Blackstone Infrastructure Partners L.P. |
| Board | Board of Directors of TXNM |
| BTU | British Thermal Unit |
| CAA | Clean Air Act |
| CAISO | California Independent System Operator |
| Carbon Pollution Standards | Carbon Pollution Standards established by the EPA on August 3, 2015 |
| Casa Mesa Wind | Casa Mesa Wind Energy Center |
| CCN | Certificate of Convenience and Necessity |
| CCR | Coal Combustion Residuals |
| CCS | Carbon Capture Storage/ Sequestration |
| CIAC | Contributions in Aid of Construction |
| $CO_2$ | Carbon Dioxide |
| CODM | Chief Operating Decision Maker |
| Community Solar Act | Senate Bill 84 effective June 18, 2021 |
| Convertible Notes | TXNM's $550.0 million junior subordinated convertible notes due 2054; issued in private offerings on June 10, 2024 and June 21, 2024 |
| COVID-19 | Novel coronavirus global pandemic |
| CSA | Coal Supply Agreement |
| CWIP | Construction work in progress |
| DC Circuit | United States Court of Appeals for the District of Columbia Circuit |
| DCRF | Distribution cost recovery filing |
| DOE | United States Department of Energy |
| EDAM | Extended Day Ahead Market |
| EEI | Edison Electric Institute, an association representing all US investor-owned electric companies. |
| Effective Time | The time the Merger is consummated |
| EGU | Electric Generating Unit |
| EIM | Western Energy Imbalance Market developed and operated by CAISO |
| ELG | Effluent Limitation Guidelines |
| Energy Transition Charge | Rate rider established to collect non-bypassable customer charges for repayment of the ETBC I Securitized Bonds |
| EPA | United States Environmental Protection Agency |

Table of Contents

| | |
|---|---|
| EPE | El Paso Electric Company |
| ERCOT | Electric Reliability Council of Texas |
| ESA | Energy Storage Agreement |
| ETA | The New Mexico Energy Transition Act |
| ETBC I | PNM Energy Transition Bond Company I, LLC, formed on August 25, 2023 |
| ETBC I Securitized Bonds | On November 15, 2023, ETBC I issued $343.2 Million aggregate principal amount of its senior secured energy transition bonds, Series A in two tranches. |
| EUEA | The New Mexico Efficient Use of Energy Act |
| EV | Electric Vehicle |
| Exchange Act | Securities Exchange Act of 1934 |
| Farmington | The City of Farmington, New Mexico |
| FASB | Financial Accounting Standards Board |
| FAST Act | SEC's modernization and simplification of Regulation S-K |
| FERC | Federal Energy Regulatory Commission |
| FIP | Federal Implementation Plan |
| FMB | First Mortgage Bond |
| Four Corners | Four Corners Power Plant |
| Four Corners Abandonment Application | PNM's January 8, 2021 application for approval for the abandonment of Four Corners and issuance of a securitized financing order |
| Four Corners CSA | Four Corners' coal supply contract with NTEC |
| Four Corners Purchase and Sale Agreement | PNM's pending sale of its 13% ownership interest in Four Corners to NTEC |
| FPPAC | Fuel and Purchased Power Adjustment Clause |
| FTY | Future Test Year |
| GAAP | Generally Accepted Accounting Principles in the United States of America |
| GHG | Greenhouse Gas Emissions |
| Grid Modernization Plan | PNM's NMPRC approved plan for grid modernization that includes investments of approximately $367 million for the first six years of a broader 11-year strategy |
| GWh | Gigawatt hours |
| IBEW | International Brotherhood of Electrical Workers |
| INDC | Intended Nationally Determined Contribution |
| IRA | Inflation Reduction Act |
| IRC | Internal Revenue Code |
| IRP | Integrated Resource Plan |
| IRS | Internal Revenue Service |
| ISFSI | Independent Spent Fuel Storage Installation |
| June 2025 Stock Purchase Agreement | TXNM's agreement for sale of 3,615,003 shares of TXNM common stock for a purchase price of $55.325 per share |
| kV | Kilovolt |
| KW | Kilowatt |
| KWh | Kilowatt Hour |
| La Joya Wind I | La Joya Wind Facility generating 166 MW of output that became operational in February 2021 |
| La Joya Wind II | La Joya Wind Facility generating 140 MW of output that became operational in June 2021 |
| La Luz | La Luz Generating Station |
| Leased Interest | Leased capacity in PVNGS Unit 1 and Unit 2 |
| Lordsburg | Lordsburg Generating Station |
| Luna | Luna Energy Facility |
| May 2025 Stock Purchase Agreement | TXNM's agreement for sale of 8,000,000 shares of TXNM common stock for a purchase price of $50.00 per share |
| MD&A | Management's Discussion and Analysis of Financial Condition and Results of Operations |
| Merger | The merger of TXNM pursuant to the Merger Agreement, with TXNM surviving as a direct, wholly-owned subsidiary of Parent (an affiliate of Blackstone Infrastructure Partners L.P.) |
| Merger Agreement | The Agreement and Plan of Merger, dated May 18, 2025, by and among TXNM, Parent, and Merger Sub |
| Merger Sub | Troy Merger Sub Inc., a New Mexico corporation, direct subsidiary of Parent and affiliate of Blackstone Infrastructure Partners L.P., which will merge with and into TXNM at the Effective Time of the Merger |
| Meta | Meta Platform, Inc., formerly known as Facebook Inc. |
| MMBTU | Million BTUs |

Table of Contents

| | |
|---|---|
| Moody's | Moody's Investor Services, Inc. |
| MW | Megawatt |
| MWh | Megawatt Hour |
| NAAQS | National Ambient Air Quality Standards |
| NDT | Nuclear Decommissioning Trusts for PVNGS |
| NEE | New Energy Economy |
| NERC | North American Electric Reliability Corporation |
| New Mexico Wind | New Mexico Wind Energy Center |
| NM 2015 Rate Case | Request for a General Increase in Electric Rates Filed by PNM on August 27, 2015 |
| NM 2016 Rate Case | Request for a General Increase in Electric Rates Filed by PNM on December 7, 2016 |
| NM Supreme Court | New Mexico Supreme Court |
| NMED | New Mexico Environment Department |
| NMMMD | The Mining and Minerals Division of the New Mexico Energy, Minerals and Natural Resources Department |
| NMPRC | New Mexico Public Regulation Commission |
| NMRD | NM Renewable Development, LLC, owned 50% each by PNMR Development and AEP OnSite Partners, LLC |
| NOx | Nitrogen Oxides |
| NPDES | National Pollutant Discharge Elimination System |
| NRC | United States Nuclear Regulatory Commission |
| NTEC | Navajo Transitional Energy Company, LLC, an entity owned by the Navajo Nation |
| OATT | Open Access Transmission Tariff |
| OBBBA | One Big Beautiful Bill Act of 2025 |
| OCI | Other Comprehensive Income |
| OMB | Office of Management and Budget |
| OPEB | Other Post-Employment Benefits |
| OSM | United States Office of Surface Mining Reclamation and Enforcement |
| Parent | Troy ParentCo LLC, a Delaware limited liability company and an affiliate of Blackstone Infrastructure Partners L.P. |
| Paris Agreement | A legally binding international treaty on climate change adopted on December 12, 2015 |
| Pattern Wind | Pattern New Mexico Wind, LLC, an affiliate of Western Spirit and Pattern Development |
| PBO | Projected Benefit Obligation |
| PCRBs | Pollution Control Revenue Bonds |
| PM | Particulate Matter |
| PNM | Public Service Company of New Mexico and Subsidiaries |
| PNM New Mexico Credit Facility | PNM's $40.0 million Unsecured Revolving Credit Facility |
| PNM 2021 Note Purchase Agreement | PNM's Agreement for the sale of PNM's 2021 SUNs |
| PNM 2021 SUNs | PNM's $160.0 million Senior Unsecured Notes issued on July 14, 2021 |
| PNM 2021 Term Loan | PNM's $75.0 million 18-month Unsecured term loan that was repaid on August 5, 2022 |
| PNM 2022 Delayed- Draw Term Loan | PNM's $225.0 million Unsecured term loan that matured February 5, 2024 |
| PNM 2023 Note Purchase Agreement | PNM's agreement for sale of PNM's 2023 SUNs |
| PNM 2023 SUNs | PNM's $200.0 million aggregate principal amount of two series of Senior Unsecured Notes issued on April 28, 2023 |
| PNM 2024 Term Loan | PNM's $200.0 million term loan that matured November 10, 2025 |
| PNM 2025 Term Loan | PNM's $195.0 million term loan that matures July 21, 2026 |
| PNM April 2025 Note Purchase Agreement | PNM's agreement for sale of PNM's April 2025 SUNs |
| PNM April 2025 SUNs | PNM's $300.0 million aggregate principal amount of two series of Senior Unsecured Notes issued on April 23, 2025 |
| PNM July 2025 Note Purchase Agreement | PNM's agreement for sale of PNM's July 2025 SUNs |
| PNM July 2025 SUNs | PNM's $350.0 million aggregate principal amount of two series of Senior Unsecured Notes issued on July 31, 2025 |
| PNM November 2025 Term Loan | PNM's $120.0 million term loan that matures on May 10, 2027 |
| PNM Revolving Credit Facility | PNM's $400.0 million Unsecured Revolving Credit Facility |

Table of Contents

| | |
|---|---|
| PNM September 2021 Note Purchase Agreement | PNM's agreement for the sale of PNM's September 2021 SUNs |
| PNM September 2021 SUNs | PNM's $150.0 million Senior Unsecured Notes issued on December 2, 2021 |
| PNMR Development | PNMR Development and Management Company, an unregulated wholly-owned subsidiary of TXNM |
| PPA | Power Purchase Agreement |
| PSPS Plan | PNM's Public Safety Power Shutoff Plan filed with the NMPRC on May 1, 2024 |
| PUCT | Public Utility Commission of Texas |
| PV | Photovoltaic |
| PVNGS | Palo Verde Nuclear Generating Station |
| PVNGS Leased Interest Abandonment Application | Application with the NMPRC requesting approval for the decertification and abandonment of 114MW of leased PVNGS capacity |
| RCT | Reasonable Cost Threshold |
| RD | Recommended Decision |
| REA | New Mexico's Renewable Energy Act of 2004 |
| RECs | Renewable Energy Certificates |
| Red Mesa Wind | Red Mesa Wind Energy Center |
| REP | Retail Electricity Provider |
| RFP | Request For Proposal |
| Rio Bravo | Rio Bravo Generating Station, formerly known as Delta |
| ROE | Return on Equity |
| RPS | Renewable Energy Portfolio Standard |
| S&P | Standard and Poor's Ratings Services |
| SCE | Southern California Edison Company |
| SCPPA | Southern California Public Power Authority |
| SEC | United States Securities and Exchange Commission |
| Securities Act | The Securities Act of 1933, as amended |
| Securitized Bonds | Energy transition bonds |
| SIP | State Implementation Plan |
| SJCC | San Juan Coal Company |
| SJGS | San Juan Generating Station |
| SJGS Abandonment Application | PNM's July 1, 2019, consolidated application seeking NMPRC approval to retire PNM's share of SJGS in 2022, for related replacement generating resources, and for the issuance of Securitized Bonds under the ETA |
| SJGS CSA | San Juan Generating Station Coal Supply Agreement |
| $SO_2$ | Sulfur Dioxide |
| SOFR | Secured Overnight Financing Rate |
| SRP | Salt River Project |
| SUNs | Senior Unsecured Notes |
| Tax Act | Federal tax reform legislation enacted on December 22, 2017, commonly referred to as the Tax Cuts and Jobs Act |
| TCEQ | Texas Commission on Environmental Quality |
| TCOS | Transmission Cost of Service |
| TECA | Texas Electric Choice Act |
| TEP | Transportation Electrification Program |
| TNMP | Texas-New Mexico Power Company and Subsidiaries |
| TNMP 2018 Rate Case | TNMP's General Rate Case Application filed on May 30, 2018 |
| TNMP 2023 Bonds | TNMP's FMBs to be issued under the TNMP 2023 Bond Purchase Agreement |
| TNMP 2023 Bond Purchase Agreement | TNMP's agreement for the sale of an aggregate $185.0 million of two series of TNMP's 2023 Bonds |
| TNMP 2024 Bonds | TNMP's FMBs to be issued under the TNMP 2024 Bond Purchase Agreement |
| TNMP 2024 Bond Purchase Agreement | TNMP's agreement for the sale of an aggregate $285.0 million of four series of TNMP's 2024 Bonds |
| TNMP Base Rate Review | TNMP's general rate review application filed with the PUCT in November 2025 |
| TNMP February 2025 Bonds | TNMP's FMBs to be issued under the TNMP February 2025 Bond Purchase Agreement |

Table of Contents

| | |
|---|---|
| TNMP February 2025 Bond Purchase Agreement | TNMP's agreement for the sale of an aggregate $140.0 million of TNMP's February 2025 Bonds |
| TNMP FMBs | TNMP's $1,505.0 million in outstanding FMBs |
| TNMP July 2025 Bond Purchase Agreement | TNMP's agreement for the sale of an aggregate $1,084.3 million of six series of TNMP's July 2025 FMBs |
| TNMP July 2025 FMBs | TNMP's FMBs to be issued under the TNMP July 2025 Bond Purchase Agreement |
| TNMP Merger Backstop Term Loan | TNMP's $1,505.0 million, 364-day delayed-draw term loan that terminated on July 22, 2025 |
| TNMP November 2025 Bond Purchase | TNMP's agreement for the sale of an aggregate $70.0 million of TNMP's November 2025 FMBs |
| TNMP November 2025 FMBs | TNMP's FMBs to be issued under the TNMP November 2025 Bond Purchase Agreement |
| TNMP Revolving Credit Facility | TNMP's $200.0 million Secured Revolving Credit Facility |
| TNP | TNP Enterprises, Inc. and Subsidiaries |
| TOD | Time of Day |
| Tucson | Tucson Electric Power Company |
| TXNM | TXNM Energy, Inc. formerly known as PNM Resources, Inc. ("PNMR") |
| TXNM 2021 Delayed-Draw Term Loan | TXNM's $1.0 billion delayed-draw term loan that matured on May 18, 2025 |
| TXNM 2022 ATM Program | TXNM's distribution agreement pursuant to which the Company issued and sold an aggregate sales price of $200.0 million of TXNM common stock, no par value, through the sales agents |
| TXNM 2023 Term Loan | TXNM $500.0 million term loan that matures on June 30, 2026 |
| TXNM 2024 ATM Program | TXNM's distribution agreement pursuant to which the Company issued and sold an aggregate sales price of $300.0 million of TXNM common stock, no par value, through the sales agents |
| TXNM 2025 ATM Program | TXNM's distribution agreement pursuant to which the Company issued and sold an aggregate sales price of $200.0 million of TXNM common stock, no par value, through the sales agents |
| TXNM 2025 Junior Subs | TXNM's $350.0 million 7.00% Fixed-to-Fixed Reset Rate Junior Subordinated Notes due 2056 |
| TXNM Merger Backstop Revolving Facility | TXNM's $910.0 million 364-day revolving credit facility |
| TXNM Revolving Credit Facility | TXNM's $300.0 million Unsecured Revolving Credit Facility |
| U.S. | The Unites States of America |
| US Supreme Court | United States Supreme Court |
| Valencia | Valencia Energy Facility |
| VIE | Variable Interest Entity |
| WACC | Weighted Average Cost of Capital |
| Western Spirit Line | An approximately 150-mile 345-kV transmission line that PNM purchased in December 2021 |
| Westmoreland | Westmoreland Coal Company |
| WFB LOC Facility | Letter of credit arrangements with Wells Fargo Bank, N.A., entered into in August 2020 |
| WMP | PNM's Wildfire Mitigation Plan filed with the NMPRC on May 1, 2024 |
| WRAP | Western Resource Adequacy Program |
| WSJ | Westmoreland San Juan, LLC, an indirect wholly-owned subsidiary of Westmoreland |
| WSJ LLC | Westmoreland San Juan, LLC, a subsidiary of Westmoreland Mining Holdings, LLC, and current owner of SJCC |
| WSPP | Western Systems Power Pool |

Table of Contents

**PART I**

**ITEM 1. BUSINESS**

**THE COMPANY**

**Overview**

TXNM Energy, Inc. ("TXNM"), is a holding company with two regulated electric utilities, PNM and TNMP, serving approximately 842,000 residential, commercial, and industrial customers in New Mexico and Texas. TXNM was incorporated in the State of New Mexico in 2000.

**Vision, Values and Business Objectives**

TXNM's vision is to create a clean and bright energy future while fulfilling its purpose to work together with customers and communities to meet their energy needs. TXNM's core values of Safety, Caring and Integrity are the foundation for the Company's business objectives focused on safety excellence and customer satisfaction, including reliability. To reach these objectives, the Company is committed to:

- Preparing our workforce with the knowledge and skills to thrive in a customer-focused world
- Purposefully delivering an intentional customer experience that exceeds our evolving customer and stakeholder expectations
- Enabling an environmentally sustainable future and deploying technologically advanced solutions that empower and benefit customers
- Demonstrating the relationship between customer excellence and our dedicated focus on financial strength

Meeting the business objectives above will drive key financial results:

- Earning authorized returns on regulated businesses
- Delivering at or above industry-average long-term earnings growth, with a dividend payout ratio between 50 and 60 percent of earnings
- Maintaining investment grade credit ratings

The Company believes that maintaining strong and modern electric infrastructure is critical to ensuring reliability and supporting economic growth. PNM and TNMP strive to balance service affordability with infrastructure investment to maintain a high level of electric reliability and to deliver a safe and superior customer experience.

Both PNM and TNMP seek cost recovery for their investments through general rate cases, periodic cost of service filings, and various rate riders. Additional information about rate filings is provided in Operations and Regulation below and in Note 17.

**Other Information**

These filings for TXNM, PNM, and TNMP include disclosures for each entity. For discussion purposes, this report uses the term "Company" when discussing matters of common applicability to TXNM, PNM, and TNMP. Discussions regarding only TXNM, PNM, or TNMP are so indicated. A reference to "MD&A" in this report refers to Part II, Item 7. – Management's Discussion and Analysis of Financial Condition and Results of Operations. A reference to a "Note" refers to the accompanying Notes to Consolidated Financial Statements.

Financial information relating to amounts of revenue, net earnings, and total assets of reportable segments is contained in MD&A and Note 2.

**Proposed Merger with Blackstone Infrastructure**

On May 18, 2025, TXNM, Parent, and Merger Sub (both Parent and Merger Sub are affiliates of Blackstone Infrastructure) entered into the Merger Agreement pursuant to which Merger Sub will merge with and into TXNM, with TXNM surviving the Merger as a direct, wholly-owned subsidiary of Parent. Pursuant to the Merger Agreement, each issued and outstanding share of the common stock of TXNM (other than those listed in Note 22) at the Effective Time will be converted into the right to receive $61.25 in cash, without interest.

The proposed Merger has been unanimously approved by the Board and was approved by the TXNM shareholders at a special meeting held on August 28, 2025. Consummation of the Merger remains subject to the satisfaction or waiver of certain customary conditions, including, without limitation, no Legal Restraint (as defined in Note 22), and the receipt of certain required regulatory approvals (including the PUCT, the NMPRC, FERC, the FCC, and the NRC). TXNM has filed applications for regulatory approval of the Merger with the NMPRC, PUCT, FERC, and FCC (Note 17). The Merger Agreement does not contain any financing condition and is currently expected to close in the second half of 2026.

Table of Contents

On December 11, 2025, TXNM and Blackstone Infrastructure reached a unanimous settlement with parties in the Merger proceeding filed with the PUCT, that was approved on February 6, 2026. On January 23, 2026, the FCC consented to the transfer of control and on February 20, 2026, the FERC approved the proposed Merger. See Note 17.

## WEBSITES

The TXNM website is an important source of Company information. New or updated information for public access is routinely posted. TXNM encourages analysts, investors, and other interested parties to register on the website to automatically receive Company information by e-mail. This information includes news releases, notices of webcasts, and filings with the SEC. Participants will not receive information that was not requested and can unsubscribe at any time.

Our corporate websites are:

- TXNM: www.txnmenergy.com
- PNM: www.pnm.com
- TNMP: www.tnmp.com

TXNM's corporate website includes a dedicated section providing key environmental and other sustainability information related to PNM's and TNMP's operations.

The contents of these websites are not a part of this Form 10-K and the inclusion of our website address in this report is an inactive textual reference only. The SEC filings of TXNM, PNM, and TNMP, including annual reports on Form 10-K, quarterly reports on Form 10-Q, current reports on Form 8-K, and amendments to those reports filed or furnished pursuant to Section 13(a) or 15(d) of the Exchange Act, are accessible free of charge on the TXNM website as soon as reasonably practicable after they are filed with, or furnished to, the SEC. Reports filed with the SEC are available on its website, www.sec.gov. These reports are also available in print upon request from TXNM free of charge.

Also available on the Company's website at https://www.txnmenergy.com/sustainability/governance/governance-documents and in print upon request from any shareholder are TXNM's:

- Corporate Governance Principles
- Code of Ethics (*Do the Right Thing – Principles of Business Conduct; Supplier Code of Conduct*)
- Charters of the Audit and Ethics Committee, Nominating and Governance Committee, Compensation and Human Capital Committee, and Finance Committee
- Restated Articles of Incorporation and Bylaws

The Company will post amendments to or waivers from its code of ethics (to the extent applicable to the Company's executive officers and directors) on its website.

## OPERATIONS AND REGULATION

### Regulated Operations

Electric power demand is generally seasonal. Power consumption in both Texas and New Mexico increases during the hot summer months with revenues traditionally peaking during that period. The seasonality of demand for electricity in turn impacts the timing of plant maintenance and operating expense throughout the year. As a result, the quarterly operating results of TXNM and its operating subsidiaries vary throughout the year. In addition, unusually mild or extreme weather patterns may cause the overall operating results of the Company to fluctuate. See Notes 16 and 17 for additional information on rate cases and other regulatory matters.

*TNMP*

*Operational Information*

TNMP is a regulated utility operating and incorporated in the State of Texas. TNMP's predecessor was organized in 1925. TNMP provides transmission and distribution services in Texas under the provisions of TECA and the Texas Public Utility Regulatory Act. TNMP is subject to traditional cost-of-service regulation with respect to rates and service under the jurisdiction of the PUCT and certain municipalities. TNMP's transmission and distribution activities are solely within ERCOT, which is the independent system operator responsible for maintaining reliable operations for the bulk electric power supply system in most of Texas. Therefore, TNMP is not subject to traditional rate regulation by FERC. TNMP serves a market of small to medium sized communities, most of which have populations of less than 50,000. TNMP is the exclusive provider of transmission and distribution services in most areas it serves.

TNMP's service territory consists of three non-contiguous areas. One portion of this territory extends from Lewisville, which is approximately 10 miles north of the Dallas-Fort Worth International Airport, eastward to municipalities near the Red River, and to communities north, west, and south of Fort Worth. The second portion of its service territory includes the area

Table of Contents

along the Texas Gulf Coast between Houston and Galveston, and the third portion includes areas of far west Texas between Midland and El Paso. TNMP owns 1,049 miles of electric transmission lines that interconnect with other utilities in Texas. There has been a significant increase in interconnection requests and data center applications on the TNMP system, which has necessitated new transmission stations, upgrades at existing stations, and transmission line capacity upgrades.

TNMP provides transmission and distribution services at regulated rates to various REPs that, in turn, provide retail electric service to consumers within TNMP's service area. For its volumetric load consumers billed on KWh usage, TNMP experienced an increase of 2.8% in its weather normalized retail load in 2025 compared to 2024. For its weather normalized demand-based load, excluding retail transmission consumers, TNMP experienced an increase of 5.3% in 2025 compared to 2024. Data center load, including distribution and transmission, has increased 70.5% in 2025 compared to 2024. As of December 31, 2025, 125 active REPs receive transmission and distribution services from TNMP. In 2025, the two largest REPs accounted for 24% and 19% of TNMP's operating revenues. No other consumer accounted for more than 10% of revenues.

TNMP holds long-term, non-exclusive franchise agreements for its electric transmission and distribution services. These agreements have varying expiration dates, and some have expired. TNMP intends to negotiate and execute new or amended franchise agreements with municipalities where the agreements have expired or will be expiring. Since TNMP is the exclusive provider of transmission and distribution services in most areas that it serves, the need to renew or renegotiate franchise agreements should not have a material adverse impact. TNMP also earns revenues from service provided to facilities in its service area that lie outside the territorial jurisdiction of the municipalities with which TNMP has franchise agreements.

*Regulatory Activities*

The rates TNMP charges customers are subject to traditional rate regulation by the PUCT. The PUCT has approved mechanisms that allow TNMP to recover capital invested in transmission and distribution projects without having to file a general rate case. The PUCT approved interim adjustments to TNMP's transmission rates of $11.5 million annually in March 2025 and $12.3 million annually in September 2025. The PUCT approved interim adjustments to TNMP's distribution rates of $25.0 million annually in June 2025 and $1.8 million annually in November 2025. The PUCT also approved rate riders that allow TNMP to recover amounts related to energy efficiency and third-party transmission costs.

In March 2025, the PUCT approved TNMP's first SRP, designed to benefit customers through enhanced resiliency of its distribution system. The approved SRP includes $545.8 million of capital investments and $86.1 million of operations and maintenance expenses associated with several programs, including vegetation management and wildfire mitigation in 2025 through 2027.

In November 2025, TNMP filed the TNMP Base Rate Review with the PUCT, requesting recovery of $2.8 billion of rate base, a requested ROE of 10.4%, and a 47.54% equity ratio. The TNMP Base Rate Review also includes increases in operations and maintenance expenses that are not recovered through semi-annual TCOS and DCRF filings, excludes increases in interest expense resulting from refinancing of debt associated with the proposed Merger, and requests recovery of $20.5 million associated with Hurricane Beryl restoration costs over a five-year period. If approved by the PUCT, the new rates are expected to become effective in mid-2026.

*PNM*

*Operational Information*

PNM is an electric utility that provides electric generation, transmission, and distribution service to its rate-regulated customers. PNM was incorporated in the State of New Mexico in 1917. PNM's retail electric service territory covers a large area of north-central New Mexico, including the cities of Albuquerque, Rio Rancho, and Santa Fe, and certain areas of southern New Mexico as well as 9 sovereign nations. Service to retail electric customers is subject to the jurisdiction of the NMPRC. The largest retail electric customer served by PNM accounted for 5.4% of its retail electric revenues for the year ended December 31, 2025. Other services provided by PNM include wholesale transmission services to third parties. Regulation encompasses the utility's electric rates, service, accounting, issuances of securities, construction of major new generation, abandonment of existing generation, types of generation resources, transmission and distribution facilities, and other matters. PNM experienced increases in weather normalized residential load of 0.1%, in commercial load of 1.0%, and industrial load of 14.3% compared to 2024. The system peak demands for retail customers are as follows:

**System Peak Demands**

| | 2025 | 2024 | 2023 |
|---|---|---|---|
| | | (Megawatts) | |
| Summer | 2,106 | 2,147 | 2,162 |
| Winter | 1,614 | 1,643 | 1,545 |

PNM holds long-term, non-exclusive franchise agreements for its electric retail operations, with varying expiration dates. These franchise agreements allow the utility to access public rights-of-way for placement of its electric facilities. To the

Table of Contents

extent franchise agreements expire in some areas PNM serves, PNM remains obligated under New Mexico state law to provide service to customers in these areas, and therefore, the expirations should not have a material adverse impact. The Albuquerque, Rio Rancho, Los Lunas, and Santa Fe metropolitan areas accounted for 41.3%, 8.5%, 5.7% and 5.9% of PNM's 2025 revenues. No other franchise area represents more than 5%. PNM also earns revenues from its electric retail operations in its service areas that do not require franchise agreements.

PNM owns 3,450 miles of electric transmission lines that interconnect with other utilities in New Mexico, Arizona, Colorado, Texas, and Utah. New Mexico is frequently characterized by its high potential for solar and wind capacity. PNM owns transmission capacity in an area of eastern New Mexico with large wind generation potential and in recent years there has been substantial interest by developers of wind generation to interconnect to PNM's transmission system in this area.

*Regulatory Activities*

NMPRC Regulated Retail Rate Proceedings

On May 15, 2025, the NMPRC approved PNM's general increase in retail electric rates. The approval includes an increase of $105.0 million in retail revenues with the first phase effective July 1, 2025, and the second phase effective April 1, 2026, reflecting an ROE of 9.45%.

In October 2024, the NMPRC approved PNM's Grid Modernization Plan. PNM's plan to modernize its electricity grid through infrastructure and technology improvements increases the efficiency, reliability, resilience, and security of PNM's electric system. PNM's grid modernization investments include approximately $344 million for the first six years of a broader 11-year strategy. The first annual Grid Modernization Plan review was approved in February 2026, updating key portions of the strategy, including increasing investments from approximately $344 million to $367 million for the first six years, and decreasing projected operations and maintenance costs by approximately 18%.

PNM has a NMPRC-approved rate rider to collect costs for renewable energy procurements that are not otherwise being collected in rates. The NMPRC has also approved riders designed to allow PNM to bill and collect substantially all fuel and purchased power costs, costs of approved energy efficiency initiatives, and costs associated with enhancing transportation electrification in New Mexico.

FERC Regulated Wholesale Transmission

Rates charged to wholesale electric transmission customers, other than customers on the Western Spirit Line, are based on a formula rate mechanism pursuant to which rates for wholesale transmission service are calculated annually in accordance with an approved formula. The formula includes updating cost of service components, including investment in plant and operating expenses, based on information contained in PNM's annual financial report filed with FERC, as well as including projected transmission capital projects to be placed into service in the following year. The projections included are subject to true-up in the formula rate for the following year. Certain items, including changes to return on equity and depreciation rates, require a separate filing to be made with FERC before being included in the formula rate.

Renewable Energy

The REA was enacted to encourage the development of renewable energy in New Mexico. The ETA amended the REA and requires utilities operating in New Mexico to have renewable portfolios equal to 40% by 2025, 50% by 2030, 80% by 2040, and 100% zero-carbon energy by 2045. The REA provides for streamlined proceedings for approval of utilities' renewable energy procurement plans, provides utilities recovery of costs incurred consistent with approved procurement plans, and sets a RCT for the procurement of renewable resources to prevent excessive costs being added to rates. PNM files required renewable energy plans with the NMPRC annually and makes procurements consistent with the plans approved by the NMPRC.

**Corporate and Other**

The Corporate and Other segment includes TXNM holding company activities, primarily related to corporate level debt and the activities of PNMR Services Company. PNMR Services Company provides corporate services through shared services agreements to TXNM and all of TXNM's business units, including PNM and TNMP. These services are charged and billed at cost on a monthly basis to the business units. The activities of PNMR Development and the equity method investment in NMRD were also included in Corporate and Other, until the close of the sale of NMRD on February 27, 2024.

Table of Contents

## SOURCES OF POWER

**TNMP**

TNMP provides only transmission and distribution services and does not sell power.

**PNM**

PNM's capacity in commercial operation as of December 31, 2025, are as follows:

| Type | Name | Location | Generation Capacity (MW) | Percent of Generation Capacity |
|---|---|---|---|---|
| Solar | PNM-owned solar | Twenty sites in New Mexico | 158 | 3.3 % |
| Solar | Britton | Torrance County, New Mexico | 50 | 1.1 |
| Solar | Encino | Sandoval County, New Mexico | 50 | 1.1 |
| Solar | Encino North | Sandoval County, New Mexico | 50 | 1.1 |
| Solar | Solar Direct | Rio Arriba County, New Mexico | 50 | 1.1 |
| Solar | Route 66 | Cibola County, New Mexico | 50 | 1.1 |
| Solar | Arroyo | McKinley County, New Mexico | 300 | 6.3 |
| Solar | Sky Ranch | Valencia County, New Mexico | 190 | 4.0 |
| Solar | Jicarilla I | Rio Arriba County, New Mexico | 50 | 1.1 |
| Solar | Atrisco | Bernalillo County, New Mexico | 300 | 6.3 |
| Solar | San Juan | San Juan County, New Mexico | 200 | 4.2 |
| Solar | TAG | Sandoval County, New Mexico | 140 | 3.0 |
| Solar | Quail Ranch | Bernalillo County, New Mexico | 100 | 2.1 |
| Solar | Community Solar | Multiple sites in New Mexico | 25 | 0.5 |
| Solar | Other | Los Lunas, New Mexico | 30 | 0.6 |
| Wind | New Mexico Wind | House, New Mexico | 200 | 4.2 |
| Wind | Red Mesa Wind | Seboyeta, New Mexico | 102 | 2.2 |
| Wind | Casa Mesa Wind | House, New Mexico | 50 | 1.1 |
| Wind | La Joya Wind I | Torrance, New Mexico | 166 | 3.5 |
| Wind | La Joya Wind II | Torrance, New Mexico | 140 | 3.0 |
| Geothermal | Lightning Dock Geothermal | Lordsburg, New Mexico | 11 | 0.2 |
| Renewable resources | | | 2,412 | 51.0 |
| Energy storage | PNM-owned battery | Valencia County & Bernalillo County, New Mexico | 12 | 0.3 |
| Energy storage | Arroyo | McKinley County, New Mexico | 150 | 3.2 |
| Energy storage | Jicarilla | Rio Arriba County, New Mexico | 20 | 0.4 |
| Energy storage | Sky Ranch | Valencia County, New Mexico | 50 | 1.1 |
| Energy storage | Sky Ranch II | Valencia County, New Mexico | 100 | 2.1 |
| Energy storage | San Juan | San Juan County, New Mexico | 100 | 2.1 |
| Energy storage | Atrisco | Bernalillo County, New Mexico | 300 | 6.3 |
| Energy storage | TAG | Sandoval County, New Mexico | 50 | 1.1 |
| Energy storage | Route 66 | Cibola County, New Mexico | 50 | 1.1 |
| Energy storage resources | | | 832 | 17.6 |
| Gas | Reeves Station | Albuquerque, New Mexico | 146 | 3.1 |
| Gas | Afton (combined cycle) | La Mesa, New Mexico | 235 | 5.0 |
| Gas | Lordsburg | Lordsburg, New Mexico | 85 | 1.8 |
| Gas | Luna (combined cycle) | Deming, New Mexico | 190 | 4.0 |
| Gas/Oil | Rio Bravo | Albuquerque, New Mexico | 149 | 3.1 |
| Gas | Valencia | Belen, New Mexico | 155 | 3.3 |
| Gas | La Luz | Belen, New Mexico | 41 | 0.9 |
| Gas-fired resources | | | 1,001 | 21.1 |
| Nuclear | PVNGS | Wintersburg, Arizona | 288 | 6.1 |
| Coal | Four Corners | Fruitland, New Mexico | 200 | 4.2 |
| | | | 4,733 | 100.0 % |

*Renewable and Energy Storage Resources*

In addition to PNM's owned and contracted solar facilities, PNM has a customer distributed solar generation program that represented 334.1 MW at December 31, 2025. PNM stores energy under ESAs and purchases renewable power under long-term PPAs, all currently having expiration dates beginning in January 2035 and extending through May 2047. The

Table of Contents

NMPRC has approved plans for PNM to procure energy and RECs from additional resources to serve retail customers and a data center located in PNM's service territory, some of which are expected to be in service by summer of 2026 and others that will be available for the 2028 summer peak. These approved resources are necessary for PNM to meet forecasted peak load requirements to serve its customers and to continue progress towards a carbon-free generating portfolio. If adjusted for these approved plans, the table above would reflect the percentage of generation capacity from renewable resources of 49.8%, energy storage resources of 26.0%, nuclear resources of 4.7%, and fossil-fueled resources of 19.6%. These resources and their currently expected operation dates are as follows:

| Type | Application | Expected Operation | Generation Capacity (MW) |
|---|---|---|---|
| *NMPRC approved* | | | |
| Energy storage | 2026 Resource Application | 2026 | 100 |
| PNM-owned battery | 2026 Resource Application | 2026 | 60 |
| Gas | 2028 Resource Application | 2028 | 12 |
| PNM-owned solar | 2028 Resource Application | 2028 | 100 |
| PNM-owned battery | 2028 Resource Application | 2028 | 50 |
| Energy storage | 2028 Resource Application | 2028 | 150 |
| Energy storage | 2028 Resource Application | 2028 | 150 |
| Solar | Meta Resources | 2026 | 100 |
| Solar | Meta Resources | 2026 | 90 |
| Solar | Meta Resources | 2027 | 100 |
| Energy storage | Meta Resources | 2026 | 100 |
| Energy storage | Meta Resources | 2026 | 68 |
| Energy storage | Meta Resources | 2027 | 100 |
| | | | 1,180 |
| *NMPRC approval pending* | | | |
| Energy storage | PNM-owned BESS Project | 2027 | 30 |

*Fossil-Fueled Plants*

Four Corners Units 4 and 5 are 13% owned by PNM. These units are jointly owned with APS, SRP, Tucson, and NTEC, and are operated by APS. PNM had no ownership interest in Four Corners Units 1, 2, or 3, which were shut down by APS in 2013. The Four Corners plant site is located on land within the Navajo Nation and is subject to an easement from the federal government. APS, on behalf of the Four Corners participants, negotiated amendments to extend the owners' right to operate the plant on the site to July 2041.

PNM owns 100% of Reeves, Afton, Rio Bravo, Lordsburg, and La Luz and one-third of Luna. The remaining interests in Luna are owned equally by Tucson and Samchully Power & Utilities 1, LLC. PNM is also entitled to the entire output of Valencia under a PPA. Reeves, Lordsburg, Rio Bravo, La Luz, and Valencia are used primarily for peaking power and transmission support. As discussed in Note 10, Valencia is a variable interest entity and is consolidated by PNM.

*Nuclear Plant*

PNM is participating in the three units of PVNGS with APS (the operating agent), SRP, EPE, SCE, SCPPA, and the Department of Water and Power of the City of Los Angeles. PNM has ownership interests of 2.3% in Unit 1, 9.4% in Unit 2, and 10.2% in Unit 3. See Note 16 for information on other PVNGS matters.

*Purchased Power*

PNM engages in activities to optimize its existing jurisdictional assets and long-term power agreements through transacting in the hour-ahead, day-ahead, week-ahead, and month-ahead bilateral markets that allows PNM to market any excess generation not required to fulfill retail load and contractual commitments.

PNM participates in the EIM, a real-time wholesale energy trading market operated by CAISO, which enables participating electric utilities to buy and sell energy. Participation in the EIM has generated cost savings that are passed through to customers under PNM's FPPAC. PNM also plans to join the EDAM, which is a voluntary day-ahead regional market that expands on CAISO's EIM market, as early as 2027. PNM joined the WRAP in April 2023 to promote region-wide coordination between power providers for assessing and addressing resource adequacy. On October 28, 2025, PNM notified the Western Power Pool that it has elected to withdraw from WRAP and will not proceed into the binding phase. PNM will seek to align resource adequacy coordination with others in the EDAM regional market to maximize customer benefits.

Table of Contents

*Plant Operating Statistics*

Equivalent availability of PNM's major base-load generating stations was:

| Plant | Operator | 2025 | 2024 |
|---|---|---|---|
| Four Corners | APS | 75.2% | 78.1% |
| PVNGS | APS | 92.3 | 91.8 |

*Joint Projects*

SJGS, PVNGS, Four Corners, and Luna are joint projects each owned or leased by several different entities. Some participants in the joint projects are investor-owned entities, while others are privately, municipally, tribally, or co-operatively owned. Furthermore, participants in SJGS had varying percentage interest in different generating units within the project and have different percentage interest with respect to plant decommissioning and coal mine reclamation obligations.

The primary operating or participation agreements for the other joint projects expire July 2041 for Four Corners, December 2046 for Luna, and November 2047 for PVNGS. As described above, Four Corners is located on land within the Navajo Nation and is subject to an easement from the federal government.

It is possible that other participants in the joint projects have circumstances and objectives that have changed from those existing at the time of becoming participants. The status of these joint projects is further complicated by the uncertainty surrounding the form of potential legislation and/or regulation of GHG, other air emissions, and CCRs, as well as the impacts of the costs of compliance and operational viability of all or certain units within the joint projects. It is unclear how these factors will enter into discussions and negotiations concerning the status of the joint projects as the expiration of basic operational agreements approaches. PNM can provide no assurance that its participation in the joint projects will continue in the manner that currently exists.

## FUEL

**PNM**

The percentages (on the basis of KWh) of PNM's generation of electricity, including Valencia, fueled by coal, nuclear fuel, and gas and oil, and the average costs to PNM of those fuels per MMBTU were as follows:

| | Coal | | Nuclear | | Gas | |
|---|---|---|---|---|---|---|
| | Percent of Generation | Average Cost | Percent of Generation | Average Cost | Percent of Generation | Average Cost |
| 2025 | 4 % | $ 9.11 | 23 % | $ 0.71 | 16 % | $ 1.80 |
| 2024 | 5 | 8.81 | 24 | 0.86 | 23 | 0.97 |

In 2025 and 2024, 57% and 48% of PNM's generation was from wind and solar resources (including PPAs), which have no fuel cost. Due to locally available natural gas, the utilization of locally available coal deposits, and the generally adequate supply of nuclear fuel, PNM believes that adequate sources of fuel are available for its generating stations into the foreseeable future. PNM recovers substantially all of its fuel and purchased power costs through the FPPAC.

*Coal*

Four Corners obtains its coal requirements from a mine near the plant. The coal supply arrangement for Four Corners runs through July 6, 2031, and provides for pricing adjustments over its term based on economic indices. See Note 16 for additional information about PNM's coal supply arrangements. See Note 17 for additional information about PNM's SJGS Abandonment Application, PNM's Four Corners Abandonment Application, and PNM's IRP.

*Natural Gas*

The natural gas used as fuel for the electric generating plants is procured on the open market and delivered by third-party transportation providers. The supply of natural gas can be subject to disruptions due to extreme weather events and/or pipeline or facility outages. PNM has contracted for firm gas transmission capacity to minimize the potential for disruptions due to extreme weather events. Certain natural gas plants of PNM's are generally used as peaking resources that are highly relied upon during seasonally high load periods and/or during periods of extreme weather, which also may be the times natural gas has the highest demand from other users.

*Nuclear Fuel and Waste*

PNM is one of several participants in PVNGS. The PVNGS participants are continually identifying their future nuclear fuel resource needs and negotiating arrangements to fill those needs. Additional needed supplies are covered through existing inventories or spot market transactions. The PVNGS participants have contracted for 77% of PVNGS's requirements for uranium concentrates through 2026 and an average of 42% through 2031. For conversion services, 90% are contracted through

Table of Contents

2026 and an average of 68% through 2031. For enrichment services, 100% is contracted through 2026 and an average of 57% is contracted through 2028. For fuel assembly fabrication, 100% is contracted through 2027.

The Nuclear Waste Policy Act of 1982 required the DOE to begin to accept, transport, and dispose of spent nuclear fuel and high-level waste generated by the nation's nuclear power plants by 1998. The DOE's obligations are reflected in a contract with each nuclear power plant. The DOE failed to begin accepting spent nuclear fuel by 1998. APS (on behalf of itself and the other PVNGS participants) pursued legal actions for which settlements were reached. See Note 16 for information concerning these actions.

The DOE had planned to meet its disposal obligations by designing, licensing, constructing, and operating a permanent geologic repository at Yucca Mountain, Nevada. In March 2010, the DOE filed a motion to dismiss with prejudice its Yucca Mountain construction authorization application that was pending before the NRC. Several legal proceedings followed challenging DOE's withdrawal of its Yucca Mountain construction authorization application. None of these lawsuits have been conclusively decided. However, the DC Circuit ordered the NRC to resume its review of the application. The results of the NRC's review publications do not signal whether or when the NRC might authorize construction of the repository.

All spent nuclear fuel from PVNGS is being stored on-site. PVNGS has sufficient capacity at its on-site ISFSI to store all of the nuclear fuel that will be irradiated during the initial operating license periods, which end in December 2027. Additionally, PVNGS has sufficient capacity at its on-site ISFSI to store a portion of the fuel that will be irradiated during the extended license periods, which end in November 2047. If uncertainties regarding the U.S. government's obligation to accept and store spent fuel are not favorably resolved, the PVNGS participants will evaluate alternative storage solutions. These may obviate the need to expand the ISFSI to accommodate all of the fuel that will be irradiated during the extended license periods.

## ENVIRONMENTAL MATTERS

Electric utilities are subject to stringent laws and regulations for protection of the environment by local, state, federal, and tribal authorities. In addition, PVNGS is subject to the jurisdiction of the NRC, which has the authority to issue permits and licenses and to regulate nuclear facilities in order to protect the health and safety of the public from radioactive hazards and to conduct environmental reviews. The liabilities under these laws and regulations can be material. In some instances, liabilities may be imposed without regard to fault, or may be imposed for past acts, whether or not such acts were lawful at the time they occurred. See MD&A – Other Issues Facing the Company – Climate Change Issues for information on GHG. In addition, Note 16 contains information related to the following matters, incorporated in this item by reference:

- PVNGS Decommissioning Funding
- Nuclear Spent Fuel and Waste Disposal
- The New Mexico Energy Transition Act
- Environmental Matters under the caption "The Clean Air Act"
- Cooling Water Intake Structures
- Effluent Limitation Guidelines
- Santa Fe Generating Station
- Environmental Matters under the caption "Coal Combustion Residuals Waste Disposal"

## COMPETITION

Regulated utilities are generally not subject to competition from other utilities in areas that are under the jurisdiction of state regulatory commissions. In New Mexico, PNM does not have direct competition for services provided to its retail electric customers. In Texas, TNMP is not currently in any direct retail competition with any other regulated electric utility. However, as with other regulated transmission and distribution utilities and cooperatives, TNMP competes to attract new customers to locate within its service territory. PNM and TNMP are also subject to customer conservation and energy efficiency activities, as well as initiatives to utilize alternative energy sources, including self-generation, to otherwise bypass the PNM and TNMP systems.

PNM is subject to varying degrees of competition in certain territories adjacent to or within the areas it serves. This competition comes from other utilities in its region as well as rural electric cooperatives and municipal utilities. PNM is involved in the generation and sale of electricity into the wholesale market to serve its New Mexico retail customers. PNM is subject to competition from regional utilities and merchant power suppliers with similar opportunities to generate and sell energy at market-based prices and larger trading entities that do not own or operate generating assets.

## HUMAN CAPITAL RESOURCES

TXNM depends on over 1,700 dedicated employees to deliver outstanding customer service and transform into a carbon-free generation future.

Table of Contents

*Culture*

Our inclusive workforce makes the Company successful through our core values of safety, caring, and integrity. Our culture fosters an accountability and behavioral mindset to sustain shared purpose. Transparency, collaboration, and innovation create both individual and organizational focus on achieving key results. Aligned with the core value of safety, we continued an in-depth safety culture initiative with training and actionable plans integrated into leadership development. In addition, we incorporate mental and physical well-being into our culture through a robust employee wellness program.

*Talent Management and Total Rewards*

We seek to attract and retain a highly skilled workforce by offering competitive compensation and benefits as well as opportunities for career advancement. Total compensation packages are reviewed regularly to ensure competitiveness within the industry and consistency with performance levels. We are committed to leadership development and mentorship programs, which ensure our leaders' success and provide diverse learning plans for all employees.

*Governance*

The Board agrees that human capital management is an important component of TXNM's continued growth and success, and is essential for its ability to attract, retain and develop talented and skilled employees. Management regularly reports to the Compensation and Human Capital Committee of the Board on human capital management topics, including corporate culture, employee development and compensation and benefits. The Compensation and Human Capital Committee has oversight of talent retention and development and succession planning, and the Board provides input on important decisions in each of these areas.

*Employees*

The following table sets forth the number of employees of TXNM, PNM, and TNMP as of December 31, 2025:

| | TXNM | PNM | TNMP |
|---|---|---|---|
| Corporate [1] | 440 | — | — |
| PNM | 870 | 870 | — |
| TNMP | 445 | — | 445 |
| Total | 1,755 | 870 | 445 |

[1] Represents employees of PNMR Services Company.

As of December 31, 2025, PNM had 389 employees in its power plant and operations areas that are currently covered by a collective bargaining agreement with the IBEW Local 611 that is in effect through April 30, 2026. As of December 31, 2025, TNMP had 229 employees represented by IBEW Local 66 covered by a collective bargaining agreement that is in effect through August 31, 2027. The wages and benefits for PNM and TNMP employees who are members of the IBEW are typically included in the rates charged to electric customers and consumers, subject to approval of the NMPRC and PUCT.

**DISCLOSURE REGARDING FORWARD LOOKING STATEMENTS**

Statements made in this filing that relate to future events or TXNM's, PNM's, or TNMP's expectations, projections, estimates, intentions, goals, targets, and strategies are made pursuant to the Private Securities Litigation Reform Act of 1995. Readers are cautioned that all forward-looking statements are based upon current expectations and estimates and apply only as of the date of this report. TXNM, PNM, and TNMP assume no obligation to update this information.

Because actual results may differ materially from those expressed or implied by these forward-looking statements, TXNM, PNM, and TNMP caution readers not to place undue reliance on these statements. TXNM's, PNM's, and TNMP's business, financial condition, cash flows, and operating results are influenced by many factors, which are often beyond their control, that can cause actual results to differ from those expressed or implied by the forward-looking statements. These factors, which are neither presented in order of importance nor weighted, include:

- The failure of Parent to obtain any equity, debt, or other financing necessary to complete the proposed Merger
- The expected timing and likelihood of completion of the proposed Merger, including the timing, receipt and terms and conditions of any required governmental and regulatory approvals of the proposed Merger that could reduce anticipated benefits or cause the parties to abandon the transaction
- The occurrence of any event, change or other circumstances that could give rise to the termination of the Merger Agreement, including in circumstances requiring TXNM to pay a termination fee
- The receipt of an unsolicited offer from another party to acquire our assets or capital stock that could interfere with the proposed Merger
- The outcome of any legal proceedings, regulatory proceedings, or enforcement matters that may be instituted relating to the proposed Merger

Table of Contents

- Risks related to disruption of management time from ongoing business operations due to the proposed Merger
- The risk that the proposed Merger and its announcement could have an adverse effect on the ability of TXNM to retain and hire key personnel and maintain relationships with its customers and suppliers, and on its operating results and businesses generally
- The announcement and pendency of the proposed Merger, during which TXNM is subject to certain operating restrictions, could have an adverse effect on TXNM's businesses, results of operations, financial condition or cash flows
- The costs incurred to consummate the proposed Merger
- The risk that the price of TXNM's common stock may fluctuate during the pendency of the proposed Merger and may decline significantly if the proposed Merger is not completed
- The ability of PNM and TNMP to recover costs and earn allowed returns in regulated jurisdictions and the impact on service levels for PNM customers if the ultimate outcomes do not provide for the recovery of costs and operating and capital expenditures, as well as other impacts of federal or state regulatory and judicial actions
- The ability of the Company to successfully forecast and manage its operating and capital expenditures, including aligning expenditures with the revenue levels resulting from the ultimate outcomes of regulatory proceedings
- Uncertainty surrounding the status of PNM's participation in jointly-owned generation projects
- Uncertainty regarding the requirements and related costs of decommissioning power plants and reclamation of coal mines, as well as the ability to recover those costs from customers, including the potential impacts of current and future regulatory proceedings
- The impacts on the electricity usage of customers and consumers due to performance of state, regional, and national economies, energy efficiency measures, weather, seasonality, alternative sources of power, advances in technology, and other changes in supply and demand
- Uncertainty related to the potential for regulatory orders, legislation or rulemakings that provide for municipalization of utility assets or public ownership of utility assets, including generation resources, or which would delay or otherwise impact the procurement of necessary resources in a timely manner
- The Company's ability to maintain its debt, including convertible debt, and access the financial markets in order to repay or refinance debt as it comes due and for ongoing operations and construction expenditures due to disruptions in the capital or credit markets, actions by ratings agencies, and fluctuations in interest rates resulting from any negative impacts from regulatory proceedings, actions by the Federal Reserve, entry into the Merger Agreement, geopolitical activity, including tariffs, or the risk of wildfires and storms
- The risks associated with the cost and completion of generation, transmission, distribution, and other projects, including uncertainty related to regulatory approvals and cost recovery, the ability of counterparties to meet their obligations under certain arrangements (including renewable energy resources, approved PPAs and ESAs), and supply chain or other outside support services that may be disrupted
- The potential unavailability of cash from TXNM's subsidiaries due to regulatory, statutory, or contractual restrictions or subsidiary earnings or cash flows
- The performance of generating units, transmission systems, and distribution systems, which could be negatively affected by operational issues, fuel quality and supply chain issues (disruptions), unplanned outages, extreme weather conditions, wildfires, storms, terrorism, cybersecurity breaches, and other catastrophic events, including the costs the Company may incur to repair its facilities and/or the liabilities the Company may incur to third parties in connection with such issues beyond the extent of insurance coverage
- State and federal regulation or legislation relating to environmental matters and renewable energy requirements, the resultant costs of compliance, and other impacts on the operations and economic viability of PNM's generating plants
- State and federal regulatory, legislative, executive, and judicial decisions and actions on ratemaking, tariffs, and taxes, including guidance related to the interpretation of changes in tax laws, the Inflation Reduction Act, the Infrastructure Investment and Jobs Act of 2021, the OBBBA, and other matters including the cancellation of grants or related funding
- Risks related to climate change, including potential financial and reputational risks resulting from increased stakeholder scrutiny related to climate change, litigation, legislative and regulatory efforts to limit GHG, including the impacts of the ETA
- Employee workforce factors, including cost control efforts and issues arising out of collective bargaining agreements and labor negotiations with union employees
- Variability of prices and volatility and liquidity in the wholesale power and natural gas markets, including the impacts to transmission margins
- Changes in price and availability of fuel and water supplies, including the ability of the mine supplying coal to Four Corners and the companies involved in supplying nuclear fuel to provide adequate quantities of fuel
- Regulatory, financial, and operational risks inherent in the operation of nuclear facilities, including spent fuel disposal uncertainties
- The impacts of decreases in the values of marketable securities maintained in trusts to provide for decommissioning, reclamation, pension benefits, and other postretirement benefits, including potential increased volatility resulting from actions by the Federal Reserve to address inflationary concerns, and international developments
- Uncertainty surrounding counterparty performance and credit risk, including the ability of counterparties to supply fuel and perform reclamation activities and impacts to financial support provided to facilitate reclamation and decommissioning at SJGS

Table of Contents

- The effectiveness of risk management regarding commodity transactions and counterparty risk
- The outcome of legal proceedings, including the extent of insurance coverage
- Changes in applicable accounting principles or policies

For information about the risks associated with the use of derivative financial instruments see Part II, Item 7A. "Quantitative and Qualitative Disclosures About Market Risk."

**SECURITIES ACT DISCLAIMER**

Certain securities described in this report have not been registered under the Securities Act of 1933, as amended, or any state securities laws and may not be reoffered or sold in the United States absent registration or an applicable exemption from the registration requirements of the Securities Act of 1933 and applicable state securities laws. This Form 10-K does not constitute an offer to sell or the solicitation of an offer to buy any securities.

## ITEM 1A. RISK FACTORS

The business and financial results of TXNM, PNM, and TNMP are subject to a number of risks and uncertainties, many of which are beyond their control, including those set forth below and in MD&A, Note 16, and Note 17. For other factors that may cause actual results to differ materially from those indicated in any forward-looking statement contained in this report, see Disclosure Regarding Forward Looking Statements in Item 1. Business. TNMP provides transmission and distribution services to REPs that provide electric service to consumers in TNMP's service territories. References to customers in the risk factors discussed below also encompass the customers of these REPs who are the ultimate consumers of electricity transmitted and distributed through TNMP's facilities.

***Regulatory Risks***

**The profitability of TXNM's utilities depends on being able to recover their costs through regulated rates and earn a fair return on invested capital, including investments in its generating plants. Without timely cost recovery, including recovery of undepreciated investments and the opportunity to earn a fair return on capital investments, TXNM's liquidity and results of operations could be negatively impacted. Further, PNM and TNMP are in a period of significant capital expenditures. While increased capital investments, higher interest rates, and other costs are placing upward pressure on rates charged to customers, energy efficiency initiatives and other factors are placing downward pressure on customer usage. The combination of these matters could adversely affect the Company's results of operations and cash flows.**

The rates PNM charges its customers are regulated by the NMPRC and FERC. TNMP is regulated by the PUCT. The Company is in a period requiring significant capital investment and is projecting total construction expenditures for the years 2026-2030 to be $10.2 billion. PNM and TNMP anticipate a trend toward increasing costs, for which they will have to seek regulatory recovery. These costs include, or are related to, costs of asset construction for generation, transmission, and distribution systems necessary to provide electric service, as well as the cost to remove and retire existing assets, environmental compliance expenditures, regulatory mandates to acquire power from renewable resources, regulation related to nuclear safety, increased costs related to cybersecurity, increased interest costs to finance capital investments, and depreciation. If the regulators do not authorize appropriate recovery of any of the costs discussed above, including undepreciated generating resources at the time those resources are removed from service and fails to authorize recovery of the costs of obtaining power to replace those resources, PNM and TNMP's financial position, results of operations, and cash flows could be negatively impacted.

At the same time costs are increasing, there are factors placing downward pressure on the demand for power, thereby reducing customer usage. These factors include changing customer behaviors, increased emphasis on energy efficiency measures, utilization of alternative sources of power, rate design that is not driven by economics, unfavorable economic conditions, reduced new sources of demand, and unpredictable weather patterns. The combination of costs increasing relatively rapidly and the technologies and behaviors that are reducing energy consumption places upward pressure on the per unit prices that must be charged to recover costs. This upward pressure on unit prices could result in additional efforts by customers to reduce consumption through alternative measures. Without timely cost recovery and the authorization to earn a reasonable return on invested capital, the Company's liquidity and results of operations could be negatively impacted.

In November 2025, TNMP filed its Base Rate Review requesting recovery of $2.8 billion of rate base as of June 30, 2025, a requested ROE of 10.4%, and a 47.54% equity ratio. The TNMP Base Rate Review also includes increases in operations and maintenance expenses that are not recovered through semi-annual TCOS and DCRF filings, excludes increases in interest expense resulting from refinancing of debt associated with the proposed Merger, and requests recovery of $20.5 million associated with Hurricane Beryl restoration costs.

It is also possible that unsatisfactory outcomes of these matters, the financial impact of climate change regulation or legislation, other environmental regulations, the result of litigation, the adequacy and timeliness of cost recovery mechanisms,

Table of Contents

and other business considerations, could jeopardize the economic viability of certain generating facilities or the ability or willingness of individual participants to continue their participation through the periods currently contemplated in the agreements governing those facilities.

**TXNM's utilities are subject to numerous comprehensive federal, state, tribal, and local environmental laws and regulations, including those related to climate change as well as increased stakeholder actions related to sustainability matters and reducing GHG, which may impose significant compliance costs and may significantly limit or affect their operations and financial results.**

Compliance with federal, state, tribal, and local environmental laws and regulations, including those addressing climate change, air quality, CCRs, discharges of wastewater originating from fly ash and bottom ash handling facilities, cooling water, sustainability, GHG emissions, and other matters, may result in increased capital, operating, and other costs, particularly with regard to enforcement efforts focused on power plant emission control obligations. These costs could include remediation, containment, civil liability, and monitoring expenses. The Company cannot predict how it would be affected if existing environmental laws and regulations were to be repealed, revised, or reinterpreted, or if new environmental laws or regulations were to be adopted. See Note 16 and the Climate Change Issues subsection of the Other Issues Facing the Company section of MD&A.

The utility industry is facing increasing stakeholder scrutiny related to sustainability. Recently, TXNM has seen a rise in certain stakeholders, such as investors, customers, employees, and lenders, placing increasing importance on the impact and social cost associated with climate change. Federal GHG reduction measures setting standards and emission guidelines, and climate-related disclosure rules remain in a state of uncertainty. Therefore, TXNM is dealing with an uncertain regulatory and policy environment and increased scrutiny and changing stakeholder expectations with respect to environmental and climate change programs, judicial decisions, and international accords. Under the Biden Administration, EPA and other federal agencies sought to expand climate change regulations and worked to aggressively reduce GHG emissions. On January 20, 2025, President Trump signed an executive order directing all agencies, including EPA, to review all agency actions and suspend, revise, or rescind those identified as imposing an undue burden on domestic energy resources. The order also expressly directs EPA to submit joint recommendations on the legality and continuing applicability of the 2009 Endangerment Finding for GHG. On January 7, 2026, EPA sent the proposed rule rescinding the 2009 Endangerment Finding to OMB. On February 12, 2026, the final rule was finalized as proposed, repealing all GHG emission standards for certain vehicles and engines promulgated on the basis of the Endangerment Finding. While the Endangerment Finding did not directly impose any requirements on EGUs, EPA has cited the Endangerment Finding as a basis for its authority to regulate GHG emissions from EGUs under CAA Section 111. PNM currently depends on fossil-fueled generation for 25.3% of its electricity. As discussed under Climate Change Issues, the existing and future EPA or state regulations regarding GHG reductions for this type of generation are under review. The expansion of federal and state regulations could result in additional operating restrictions on facilities and increased generation and compliance costs.

CCRs from the operation of SJGS were used in the reclamation of a surface coal mine. These CCRs consist of fly ash, bottom ash, and gypsum. Any new regulation that would affect the reclamation process, including any future decision regarding classification of CCRs as hazardous waste, could significantly increase the costs of the disposal of CCRs and the costs of mine reclamation. In addition, PNM would incur additional costs to the extent the rule requires the closure or modification of CCR units at Four Corners or the construction of new CCR units beyond those already anticipated or requires corrective action to address releases from CCR disposal units at the site. See Note 16.

A regulatory body may identify a site requiring environmental cleanup, including cleanup related to catastrophic events such as hurricanes or wildfires, and designate PNM or TNMP as a responsible party. There is also uncertainty in quantifying exposure under environmental laws that impose joint and several liability on all potentially responsible parties. Failure to comply with environmental laws and regulations, even if such non-compliance is caused by factors beyond PNM's or TNMP's control, may result in the assessment of civil or criminal penalties and fines.

If PNM fails to timely obtain, maintain, or comply with any required environmental regulatory approval, operations at affected facilities could be suspended or could subject PNM to additional expenses and potential penalties. Failure to comply with applicable environmental laws and regulations also could result in civil liability arising out of government enforcement actions or private claims. Environmental noncompliance could also result in reputational harm, which may cause stock price decreases or cause certain investors and financial institutions not to purchase the Company's debt securities or otherwise provide the Company with capital or credit on favorable terms, which may cause the cost of capital to increase. In addition, TXNM and its operating subsidiaries may underestimate the costs of environmental compliance, liabilities, and litigation due to the uncertainty inherent in these matters. Although there is uncertainty about the timing and form of the implementation of EPA's regulations regarding GHG emissions, climate change, CCRs, power plant emissions, changes to the ambient air quality standards, and other environmental issues, the promulgation and implementation of such regulations could have a material impact on operations. The Company is unable to estimate these costs due to the many uncertainties associated with, among other things, the nature and extent of future regulations and changes in existing regulations, including the changes in regulatory policy under the Trump Administration. Timely regulatory recovery of costs associated with any environmental-related

Table of Contents

regulations would be needed to maintain a strong financial and operational profile. The above factors could adversely affect the Company's business, financial position, results of operations, and liquidity.

**TXNM, PNM, and TNMP are subject to complex government regulation unrelated to the environment, which may have a negative impact on their businesses, financial position and results of operations.**

To operate their businesses, TXNM, PNM, and TNMP are required to have numerous permits and approvals from a variety of regulatory agencies. Regulatory bodies with jurisdiction over the utilities include the NMPRC, NMED, PUCT, TCEQ, ERCOT, FERC, NRC, EPA, and NERC. Oversight by these agencies covers many aspects of the Company's utility operations including, but not limited to: location, construction, and operation of facilities; the purchase of power under long-term contracts; conditions of service; the issuance of securities; and rates charged to customers. FERC has issued a number of rules pertaining to preventing undue discrimination in transmission services and electric reliability standards. The significant level of regulation imposes restrictions on the operations of the Company and causes the incurrence of substantial compliance costs. TXNM and its subsidiaries are unable to predict the impact on their business and operating results from future actions of any agency regulating the Company. Changes in existing regulations or the adoption of new ones could result in additional expenses and/or changes in business operations. Failure to comply with any applicable rules, regulations or decisions may lead to customer refunds, fines, penalties, and other payments, which could materially and adversely affect the results of operations and financial condition of TXNM and its subsidiaries.

***Operational Risks***

**Customer electricity usage could be reduced by increases in prices charged and other factors. This could result in underutilization of PNM's generating capacity, as well as underutilization of the capacities of PNM's and TNMP's transmission and distribution systems. Should this occur, operating and capital costs might not be fully recovered, and financial performance could be negatively impacted.**

A number of factors influence customers' electricity usage. These factors include but are not limited to rates charged by PNM and TNMP, rates charged by REPs utilizing TNMP's facilities to deliver power, energy efficiency initiatives, unusual weather patterns, availability and cost of alternative sources of power, and national, regional, or local economic conditions. These factors and others may prompt customers to institute additional energy efficiency measures or take other actions that would result in lower energy consumption. If customers bypass or underutilize PNM's and TNMP's facilities through self-generation, renewable, or other energy resources, technological change, or other measures, revenues would be negatively impacted.

PNM's and TNMP's service territories include several military bases and federally funded national laboratories, as well as large industrial customers that have significant direct and indirect impacts on the local economies where they operate. The Company does not directly provide service to any of the military bases or national laboratories but does provide service to large industrial customers. The Company's business could be hurt from the impacts on the local economies associated with these customer groups as well as directly from the large industrial customers for a number of reasons including federally-mandated base closures, significant curtailment of the funding of or activities at the bases or national laboratories, and closure of industrial facilities or significant curtailment of their activities.

Another factor that could negatively impact the Company is that proposals are periodically advanced in various localities to municipalize, or otherwise take over PNM's facilities, which PNM believes would require state legislative or other legal action to implement, or to establish new municipal utilities in areas currently served by PNM. If any such initiative is successful, the result could be a material reduction in the usage of the facilities, a reduction in rate base, and reduced earnings.

Should any of the above factors result in facilities being underutilized, the Company's financial position, results of operations, and cash flows could be significantly impacted.

**Advances in technology could make electric generating facilities less competitive.**

Research and development activities are ongoing for new technologies that produce power or reduce power consumption. These technologies include renewable energy, customer-oriented generation, energy storage, and energy efficiency. PNM generates power at central station power plants to achieve economies of scale and produce power at a cost that is competitive with rates established through the regulatory process. There are distributed generation technologies that produce power, including fuel cells, microturbines, wind turbines, and solar cells, which have become increasingly cost competitive. These advances in technology have reduced the costs of these alternative methods of producing power to a level that is competitive with that of central station power production. In addition, advances made in the capabilities of energy storage have further decreased power production and peak usage through the dispatch of more battery systems. These technological advances have resulted in demand reduction that negatively impact revenue and/or result in underutilized assets that have been built to serve peak usage. In addition, certain federal, state, or local requirements that regulated utilities such as PNM are required to follow could result in third parties being able to provide electricity from similar generation technologies to consumers at prices lower than PNM is able to offer. As these technologies become more cost competitive or can be used by

Table of Contents

third parties to supply power at lower prices than PNM is able to offer, PNM's energy sales and/or regulated returns could be eroded, and the value of its generating facilities could be reduced. Advances in technology could also change the channels through which electric customers purchase or use power, which could reduce the Company's sales and revenues or increase expenses. These advances can also create more uncertainty in load shapes and forecasts, which could have implications for generation and system planning.

**Costs of decommissioning, remediation, and restoration of nuclear and fossil-fueled power plants, as well as reclamation of related coal mines, could exceed the estimates of TXNM and PNM as well as the amounts PNM recovers from its ratepayers, which could negatively impact results of operations and liquidity.**

PNM has interests in a nuclear power plant, a coal-fired power plant, and several natural gas-fired power plants and is obligated to pay its share of the costs to decommission these facilities. PNM is also obligated to pay for its share of the costs of reclamation of the mine that supplies coal to the coal-fired power plant. Likewise, other owners or participants are responsible for their shares of the decommissioning and reclamation obligations, and it is important to PNM that those parties fulfill their obligations. Rates charged by PNM to its customers, as approved by the NMPRC, include a provision for recovery of certain costs of decommissioning, remediation, reclamation, and restoration. The NMPRC has established a cap on the amount of costs for the final reclamation of the surface coal mines that may be recovered from customers. PNM records estimated liabilities for its share of the legal obligations for decommissioning and reclamation. These estimates include many assumptions about future events and are inherently imprecise. In the event the costs to decommission the facilities or to reclaim the mines serving the plants exceed current estimates, or if amounts are not approved for recovery by the NMPRC, results of operations could be negatively impacted.

The costs of decommissioning any nuclear power plant are substantial. PNM is responsible for all decommissioning obligations related to its entire interest in PVNGS, including portions both during and after termination of the leases. PNM maintains trust funds designed to provide adequate financial resources for decommissioning PVNGS and SJGS, and for reclamation of the coal mine that served SJGS and continues to serve Four Corners at the end of its expected life. However, if the PVNGS units are decommissioned before their planned date or the coal mine serving Four Corners is shut down sooner than expected, these funds may prove to be insufficient.

**The financial performance of TXNM, PNM, and TNMP may be adversely affected if power plants, other generation resources, and transmission and distribution systems do not operate reliably and efficiently.**

The Company's financial performance depends on the successful operation of PNM's generation assets, as well as the transmission and distribution systems of PNM and TNMP. PNM's retirement of SJGS will increase PNM's dependency on other generation resources, including renewable resources, gas-fired facilities, and PVNGS, and will reduce PNM's flexibility in managing those resources. Unscheduled or longer than expected maintenance outages, breakdown or failure of equipment or processes due to aging infrastructure, inability to install or operate renewable resources, temporary or permanent shutdowns to achieve environmental compliance, other performance problems with the generation assets, severe weather conditions, accidents and other catastrophic events, acts of war or terrorism, cybersecurity attacks, wildfires, disruptions in the supply, quality, and delivery of fuel and water supplies, and other factors could result in PNM's load requirements being larger than available system generation capacity. Unplanned outages of generating units and extensions of scheduled outages occur from time to time and are an inherent risk of the Company's business. If these were to occur, PNM would be required to purchase electricity in either the wholesale market or spot market at the then-current market price. There can be no assurance that sufficient electricity would be available at reasonable prices, or available at all. The failure of transmission or distribution facilities may also affect PNM's and TNMP's ability to deliver power. These potential generation, distribution, and transmission problems, and any service interruptions related to them, could result in lost revenues and additional costs.

**TXNM, PNM, and TNMP are subject to information security breaches and risks of unauthorized access to their information and operational technology systems as well as physical threats to assets.**

The Company faces the risk of physical and cybersecurity attacks, both threatened and actual, against generation facilities, transmission and distribution infrastructure, information technology systems, and network infrastructure, which could negatively impact the ability of the Company to generate, transmit, and distribute power, or otherwise operate facilities in the most efficient manner or at all.

The utility industry in which the Company operates is a highly regulated industry that requires the continued operation of sophisticated information technology systems and network infrastructure, some of which are deemed to be critical infrastructure under NERC guidelines. Certain of the Company's systems are interconnected with external networks. In the regular course of business, the utilities handle a range of sensitive security and customer information. PNM and TNMP are subject to the rules of various agencies and the laws of various states, related to safeguarding and maintaining the confidentiality of this information. Cyber-attacks regularly occur and generally are unsuccessful. To date, those few events that were successful did not result in significant or consequential business impacts. However, despite steps the Company may take to detect, mitigate, and/or eliminate threats and respond to security incidents, the techniques used by those who wish to obtain unauthorized access, and possibly disable or sabotage systems and/or abscond with information and data, change

Table of Contents

frequently and continue to evolve with the use of artificial intelligence and the Company may not be able to protect against all such actions.

With the proliferation of Generative Artificial Intelligence ("GenAI") tools like opensource ChatGPT and other public Large Language models, bad actors are becoming better equipped to effectively launch social engineering attacks against individuals and organizations. With their broad array of use cases, these tools are enhancing data theft, malware development, social engineering, ransomware, and misinformation. GenAI technology is enabling malicious actors to increase the speed and variation of their attacks by modifying code almost instantaneously, enabling attacks to be created and deployed with thousands of variations of social engineering messages, effectively changing to a more iterative attack methodology to increase their probability of success. In the event that a capable adversary attacks the Company's computer and operating systems, despite the best efforts of the Company, the generation, transmission, or distribution of electrical services could be degraded or disrupted, customer information, business records, or other sensitive data could be lost, destroyed, or released outside of the Company's control.

Further, the Company's use of technologies manufactured by third parties, including applications with GenAI capabilities, may be subject to espionage activities, and cyber-attack of the third party resulting in the loss of confidentiality, privacy, integrity of data, and other losses outside of the control of the Company. Although the Company has implemented security measures to identify, prevent, detect, respond to, and recover from cyber and physical security events and supply chain disruptions, critical infrastructure, including information and operational technology systems, are vulnerable to disability, failures, or unauthorized access, which could occur as a result of malicious compromise, employee error, and/or employee misconduct or supply compromise.

A successful physical or cybersecurity attack or other similar failure of the systems could impact the reliability of PNM's generation and PNM's and TNMP's transmission and distribution systems, including the possible unauthorized shutdown of facilities. Such an event could lead to disruptions of business operations, including the Company's ability to generate, transport, and deliver power to serve customers, to bill customers, and to process other financial information. A breach of the Company's information systems could also lead to the loss and destruction of confidential and proprietary data, personally identifiable information, trade secrets, intellectual property and supplier data, and could disrupt business operations which could harm the Company's reputation and financial results, as well as potential increased regulatory oversight, litigation, fines, and other remedial action. The costs incurred to investigate and remediate a physical or cybersecurity attack could be significant. A significant physical or cybersecurity attack on the Company's critical infrastructure could have an adverse impact on the operations, reputation, and financial condition of TXNM, PNM, and TNMP.

**There are inherent risks in the ownership and operation of nuclear facilities.**

PNM has a 7.3% undivided interest in PVNGS that represented 6.1% of PNM's total generating capacity as of December 31, 2025. PVNGS is subject to environmental, health, and financial risks including but not limited to the ability to obtain adequate supplies of nuclear fuel and water, the ability to dispose of spent nuclear fuel, decommissioning of the plant (see above), securing the facilities against possible terrorist attacks, and unscheduled outages due to equipment failures.

The NRC has broad authority under federal law to impose licensing and safety-related requirements for the operation of nuclear generation facilities. Events at nuclear facilities of other operators or which impact the industry generally may lead the NRC to impose additional requirements and regulations on all nuclear generation facilities, including PVNGS. A major incident at a nuclear facility anywhere in the world could cause the NRC to limit or prohibit the operation or licensing of any domestic nuclear unit and to promulgate new regulations that could require significant capital expenditures and/or increase operating costs.

In the event of noncompliance with its requirements, the NRC has the authority to impose a progressively increasing inspection regime that could ultimately result in the shutdown of a unit, civil penalties, or both, depending upon the NRC's assessment of the severity of the situation, until compliance is achieved. Increased costs resulting from penalties, a heightened level of scrutiny, and/or implementation of plans to achieve compliance with NRC requirements could adversely affect the financial condition, results of operations, and cash flows of TXNM and PNM. Although PNM has no reason to anticipate a serious nuclear incident at PVNGS, if an incident did occur, it could materially and adversely affect PNM's results of operations and financial condition.

PNM has external insurance coverage to minimize its financial exposure to some risks. However, it is possible that liabilities associated with nuclear operations could exceed the amount of insurance coverage. See Note 16.

**Peak demand for power could exceed forecasted supply capacity, resulting in increased costs for purchasing capacity in the market or building additional generation facilities and/or energy storage facilities.**

PNM is obligated to supply power to retail customers. As PNM continues to complete the significant transition in generation resources necessary to achieve 100% carbon emission-free generation, there are certain potential deliverability and cost risks associated with this transition. These risks are in three main areas, including 1) risk of completion of replacement

Table of Contents

resources prior to planned generation unit retirements, 2) increasing levels of renewable generation presenting risks of uncertainty and variability that will be further compounded as neighboring systems transition towards increasing levels of renewable resources, and 3) risks for mitigating possible resource volatility through a shrinking energy market.

At peak times, power demand could exceed PNM's forecasted available generation capacity, particularly if PNM's power plants are not performing as anticipated and additional resources are not approved, or are not available, as PNM transitions its system to carbon emission-free generation and energy storage. Availability of this technology may create additional strain on the system by adding these additional resources without adequate storage. Additionally, further advances in the technology of renewable resources may need to occur in order to ensure that these resources meet carbon emission-free standards. Competitive market forces or adverse regulatory actions may require PNM to purchase capacity and energy from the market or build additional resources to meet customers' energy needs in an expedited manner. If that occurs, PNM may see opposition to recovery of these additional costs and could experience a lag between when costs are incurred and when regulators permit recovery in customers' rates. These situations could have negative impacts on results of operations and cash flows.

**Difficulties in obtaining permits and rights-of-way could negatively impact PNM's results of operations.**

PNM's ability to execute planned operational activities and projects may be inhibited by difficulties in obtaining permits and rights-of-way and other delays. Many of PNM's transmission and distribution lines cross federal, state, and tribal lands. The Company can experience significant delays in obtaining approvals for new infrastructure, as well as renewals of existing rights-of-way and access for critical maintenance, including vegetation management on these lands. The environmental regulations governing siting and permitting on federal, state, and tribal lands are complex, involve multiple agencies, and include a public process. Any of these risk factors could result in higher costs, delays, or the inability to complete planned projects.

***General Economic and Weather Risks***

**Changes in interest rates could adversely affect our business**.

Interest rates have increased and may continue to increase in the future. As a result, interest rates on future credit facilities and debt offerings could be higher than current levels, causing our financing costs to increase accordingly. In addition, because we use both fixed and variable rate debt, we are exposed to market risk due to the floating interest rates on our variable rate borrowings. Our results of operations, cash flows and financial position could be affected adversely by significant fluctuations in interest rates from current levels.

**Supply chain issues, high inflation, actions by the Federal Reserve to address inflationary concerns and other market conditions, geopolitical activity and the resulting impact on business and economic conditions could negatively affect the Company's business, results of operations, financial condition, cash flows, and the trading value of TXNM's common stock and the Company's debt securities.**

Continued supply chain issues were initially experienced during high inflation, actions by the Federal Reserve to address inflationary concerns or other market conditions, geopolitical activity and the resulting impact on the economy and financial markets could adversely affect the Company's business, results of operations, financial condition, cash flows, and access to the capital markets. There is no assurance that the continued effects of these market conditions will not adversely impact our business, results of operations, financial condition, cash flows, ability to access the capital markets, and the trading value of the Company's common stock and debt securities. These effects could adversely impact the Company by:

- reducing usage and/or demand for electricity by our customers in New Mexico and Texas
- causing delays and disruptions in the availability of and timely delivery of materials and components used in our operations
- causing delays and disruptions in the supply chain resulting in disruptions in the commercial operation dates of certain projects
- causing a deterioration in the credit quality of our counterparties, including power purchase agreement providers, contractors or retail customers, that could result in credit losses
- causing impairments of goodwill or long-lived assets and adversely impacting the Company's ability to develop, construct and operate facilities
- impacting the Company's ability to meet the requirements of the covenants in our existing credit facilities, including covenants regarding debt to capitalization
- causing a deterioration in our financial metrics or the business environment that impacts our credit ratings
- decreasing the value of our investment securities held in trusts for pension and other postretirement benefits, and for nuclear decommissioning, SJGS decommissioning, and coal mine reclamation, which could lead to increased funding requirements
- impacting our liquidity position and cost of and ability to access funds from financial institutions and capital markets
- causing other unpredictable events.

Table of Contents

**General economic conditions of the nation and/or specific areas can affect the Company's customers and suppliers. Economic recession or downturn may result in decreased consumption by customers and increased bad debt expense, and could also negatively impact suppliers, all of which could negatively affect the Company.**

Economic activity in the service territories of TXNM subsidiaries is a key factor in their performance. Decreased economic activity can lead to declines in energy consumption, which could adversely affect future revenues, earnings, and growth. Higher unemployment rates, both in the Company's service territories and nationwide, could result in commercial customers ceasing operations and lower levels of income for residential customers. These customers might then be unable to pay their bills on time, which could increase bad debt expense and negatively impact results of operations and cash flows. Economic conditions also impact the supply and/or cost of commodities and materials needed to construct or acquire utility assets or make necessary repairs.

**The operating results of TXNM and its operating subsidiaries are seasonal and are affected by weather conditions.**

Electric generation, transmission, and distribution are generally seasonal businesses that vary with the demand for power. With power consumption typically peaking during the hot summer months, revenues traditionally peak during that period. As a result, quarterly operating results of TXNM and its operating subsidiaries vary throughout the year. In addition, TXNM and its operating subsidiaries have historically had lower revenues resulting in lower earnings when weather conditions are milder. Unusually mild weather in the future could reduce the revenues, net earnings, and cash flows of the Company.

Drought conditions in New Mexico, especially in the "four corners" region, where Four Corners is located, may affect the water supply for PNM's generating plants. If inadequate precipitation occurs in the watershed that supplies that region, PNM may have to decrease generation at these plants. This would require PNM to purchase power to serve customers and/or reduce the ability to sell excess power on the wholesale market and reduce revenues. Drought conditions or actions taken by the court system, regulators, or legislators could limit PNM's supply of water, which would adversely impact PNM's business.

TNMP's service areas are exposed to extreme weather, including high winds, drought, flooding, ice storms, and periodic hurricanes. Extreme weather conditions, particularly high winds and severe thunderstorms, also occur periodically in PNM's service areas. These severe weather events can physically damage facilities owned by TNMP and PNM. Any such occurrence both disrupts the ability to deliver energy and increases costs. Extreme weather can also reduce customers' usage and demand for energy or could result in the Company incurring obligations to third parties related to such events. These factors could negatively impact results of operations and cash flows.

**The impact of wildfires could negatively affect PNM's and TNMP's results of operations.**

PNM and TNMP have large networks of electric transmission and distribution facilities. Weather conditions including severe drought, high winds, and the natural vegetation in the U.S. Southwest region and certain parts of Texas, could contribute to wildfires in or near PNM's and TNMP's service territories. The risk of wildfires could result in higher maintenance costs, increased insurance premiums, and the inability to maintain adequate insurance coverage. PNM and TNMP take proactive steps to mitigate wildfire risk. However, wildfire risk is always present and PNM and TNMP could be held liable for damages incurred as a result of wildfires caused, or allegedly caused, by their transmission and distribution systems. In addition, wildfires could cause damage to PNM's and TNMP's assets that could result in loss of service to customers or make it difficult to supply power in sufficient quantities to meet customer needs. Wildfire avoidance measures, such as intentional power interruptions, also may lead to customer claims for lost service, business interruption, and other injuries.

Failure to adequately address the risk of wildfires could also result in civil liability arising out of government enforcement actions or private claims. These actions could also result in reputational harm, which may cause stock price decreases, increased insurance premiums or the inability to maintain adequate insurance coverage, or cause certain investors and financial institutions not to purchase the Company's debt securities or otherwise provide the Company with capital or credit on favorable terms, which may cause the cost of capital to increase. In addition, TXNM and its operating subsidiaries may underestimate the costs of litigation due to the uncertainty inherent in these matters. These events could have negative impacts on the Company's financial position, results of operations, and cash flows.

***Risks Relating to the Proposed Merger with Blackstone Infrastructure***

**There is no assurance when or if the proposed Merger will be completed.**

Completion of the proposed Merger is subject to the satisfaction or waiver of a number of conditions as set forth in the Merger Agreement, including regulatory approvals and other customary closing conditions. There can be no assurance that the conditions to completion of the proposed Merger will be satisfied or waived or that other events will not intervene to delay or result in the failure to close the proposed Merger. In addition, each of Blackstone Infrastructure and TXNM may unilaterally terminate the Merger Agreement under certain circumstances, and Blackstone Infrastructure and TXNM may agree at any time to terminate the Merger Agreement, even though TXNM shareholders already approved the Merger Agreement at a special meeting on August 28, 2025 (and thereby approved the Merger and the other transactions contemplated by the Merger Agreement).

Table of Contents

**Blackstone Infrastructure and TXNM may be unable to obtain the regulatory approvals required to complete the proposed Merger.**

In addition to other conditions set forth in the Merger Agreement, completion of the proposed Merger is conditioned upon the receipt of various state and U.S. federal regulatory approvals, including, but not limited to, expiration or termination of the applicable waiting period under HSR Act and approval by NMPRC, PUCT, FERC, FCC, and NRC. Blackstone Infrastructure and TXNM have made and will make various filings and submissions and will pursue all required consents, orders and approvals in accordance with the Merger Agreement. These consents, orders and approvals may impose requirements, limitations or costs or place restrictions, and if such consents, orders and approvals require an extended period of time to be obtained, such extended period of time could increase the chance that an event occurs that constitutes a material adverse effect with respect to TXNM and thereby may allow Blackstone Infrastructure not to complete the proposed Merger. Such extended period of time also may increase the chance that other adverse effects with respect to TXNM could occur, such as the loss of key personnel. Further, no assurance can be given that the required consents, orders and approvals will be obtained or that the required conditions to closing will be satisfied.

**The announcement and pendency of the proposed Merger, during which TXNM is subject to certain operating restrictions, could have an adverse effect on TXNM's businesses, results of operations, financial condition, or cash flows.**

The announcement and pendency of the proposed Merger could disrupt TXNM's businesses, and uncertainty about the effect of the Merger may have an adverse effect on TXNM. These uncertainties could disrupt the business of TXNM and cause suppliers, vendors, partners, and others that deal with TXNM to defer entering into contracts with TXNM or making other decisions concerning TXNM or seek to change or cancel existing business relationships with TXNM. In addition, TXNM's employees may experience uncertainty regarding their roles after the Merger; for example, employees may depart either before the completion of the Merger because of such uncertainty and issues relating to the difficulty of coordination or a desire not to remain following the Merger; and the pendency of the Merger may adversely affect TXNM's ability to retain, recruit, and motivate key personnel. Additionally, the attention of TXNM's management may be directed towards the completion of the Merger including obtaining regulatory approvals and other transaction-related considerations and may be diverted from the day-to-day business operations of TXNM and matters related to the Merger may require commitments of time and resources that could otherwise have been devoted to other opportunities that might have been beneficial to TXNM. Additionally, the Merger requires TXNM to obtain Blackstone Infrastructure's consent prior to taking certain specified actions while the Merger is pending. These restrictions may prevent TXNM from pursuing otherwise attractive business opportunities or other capital structure alternatives and making other changes to its business or executing certain of its business strategies prior to the completion of the Merger. Further, the Merger may give rise to potential liabilities, including as a result of pending and future shareholder lawsuits relating to the Merger. Any of these matters could adversely affect the businesses of, or harm the results of operations, financial condition or cash flows of TXNM.

**TXNM will incur substantial transaction fees and costs in connection with the proposed Merger.**

TXNM has incurred and expects to incur additional material non-recurring expenses in connection with the proposed Merger and completion of the transactions contemplated by the Merger Agreement. Further, even if the proposed Merger is not completed, TXNM will need to pay certain costs relating to the proposed Merger incurred prior to the date the proposed Merger was abandoned, such as legal, accounting, financial advisory, filing, and printing fees.

**The termination of the Merger Agreement could negatively impact TXNM.**

If the Merger is not completed for any reason, the ongoing business of TXNM may be adversely affected and, without realizing any of the anticipated benefits of having completed the Merger, TXNM would be subject to a number of risks, including the following:

- TXNM may experience negative reactions from the financial markets, including a decline of its stock price (which may reflect a market assumption that the Merger will be completed)
- TXNM may experience negative reactions from its customers, regulators and employees
- TXNM may be required to pay certain costs relating to the Merger, whether or not the Merger is completed
- Matters relating to the Merger will have required substantial commitments of time and resources by TXNM management, which would otherwise have been devoted to day-to-day operations and other opportunities that may have been beneficial to TXNM as an independent company.

If the Merger Agreement is terminated and the Board seeks another merger, business combination or other transaction, TXNM shareholders cannot be certain that TXNM will be able to find a party willing to offer equivalent or more attractive consideration than the consideration TXNM shareholders would receive in the Merger. If the Merger Agreement is terminated under certain circumstances specified in the Merger Agreement (including if Blackstone Infrastructure terminates the Merger Agreement due to a change in recommendation of the Board or if TXNM terminates the Merger Agreement to accept a Superior Proposal (as defined in the Merger Agreement)), TXNM will be required to pay Blackstone Infrastructure a termination fee of $210.0 million, plus costs and expenses.

Table of Contents

**Lawsuits have been, and additional lawsuits may be, filed that challenge the proposed Merger, and adverse judgments in these lawsuits may prevent the proposed Merger from becoming effective within the expected timeframe or at all.**

TXNM and members of the Board have been, and may be, named as defendants in putative class action lawsuits or other proceedings that have been or may be brought by TXNM shareholders challenging the proposed Merger. If the plaintiffs in any of these actions seek a preliminary or permanent injunction and are successful in obtaining one, the parties may be prevented from completing the proposed Merger in the expected timeframe, if at all. Even if the plaintiffs in these actions are not successful in obtaining an injunction, they may nevertheless continue the action and seek damages after the transaction has closed. In addition, the costs of defending against such claims could adversely affect the financial condition of TXNM and such actions could adversely affect the reputation of TXNM and members of its Board or management.

Counsel for TXNM received a number of demand letters from law firms on behalf of individuals who are purported TXNM shareholders, accompanied by draft complaints naming TXNM and its directors as defendants and alleging that TXNM's preliminary proxy statement with respect to the Merger, omitted or misrepresented certain material information. Such draft complaints include a request for injunctive relief with respect to the TXNM shareholder vote to approve, and the closing of, the Merger, as well as other remedies, including counsel fees. In August 2025, reported shareholders filed complaints in New York state court alleging disclosure violations and seeking injunctive relief. TXNM believes that the allegations set forth in the demand letters, draft complaints, and New York state court cases are without merit and, if such complaints are actually filed, will defend such actions vigorously. See Note 16 for additional information concerning the Merger-related litigation.

**The Merger Agreement contains provisions that could discourage a potential alternative acquirer that might be willing to pay more to acquire TXNM.**

The Merger Agreement contains customary "no shop" provisions which state that we will not solicit or facilitate proposals regarding a merger or similar transaction with another party except in certain limited circumstances. While the Board may withdraw or change its recommendation regarding the Merger Agreement in response to an unsolicited third-party proposal to acquire TXNM that the Board determines to be superior to the Merger, there are restrictions on its ability to do so, and in certain circumstances, TXNM may also be required to pay Blackstone Infrastructure a termination fee. These provisions could discourage a potential third-party acquirer from considering or proposing an alternative acquisition, even if it were prepared to pay consideration with a higher value than that proposed to be paid in the Merger.

***Financial Risks***

**TXNM has counterparty credit risk in connection with financial support that was provided to facilitate the coal supply arrangement for SJGS. Adverse developments from these factors could have a negative impact on the business, financial condition, results of operations, and cash flows of PNM and TXNM.**

TXNM has an arrangement with a bank under which the bank has issued $19.3 million of letters of credit in favor of sureties in order for the sureties to post reclamation bonds that are required under the miner's operating permit. The Company's financial position, results of operations, and cash flows could be negatively impacted if the current mine operator were to default on its obligations to reclaim the San Juan mine and TXNM is required to perform under the letter of credit support agreement.

**TXNM and its subsidiaries' substantial indebtedness could adversely affect its financial condition.**

TXNM and its subsidiaries currently have a significant amount of indebtedness, including the Convertible Notes and TXNM 2025 Junior Subs. This significant amount of indebtedness could limit TXNM's ability to obtain additional financing for working capital, capital expenditures, acquisitions, debt service requirements, stock repurchases or other purposes. It may also increase TXNM's vulnerability to adverse economic, market and industry conditions, limit its flexibility in planning for, or reacting to, changes in its business operations or to its industry overall, and place TXNM at a disadvantage in relation to its competitors that have lower debt levels. Any or all of the above events and/or factors could have an adverse effect on TXNM's results of operations and financial condition.

**Servicing TXNM and its subsidiaries' debt requires a significant amount of cash, and it may not have sufficient cash flow from its business to pay its substantial debt.**

TXNM and its subsidiaries' ability to make scheduled payments of the principal of, to pay interest on or to refinance, its indebtedness, including the Convertible Notes and TXNM 2025 Junior Subs, depends on its future performance, which is subject to economic, financial, competitive and other factors beyond its control. TXNM's business may not continue to generate cash flow from operations in the future sufficient to service its debt and make necessary capital expenditures. If TXNM is unable to generate such cash flow, TXNM may be required to adopt one or more alternatives, such as selling assets, restructuring debt or obtaining additional equity capital on terms that may be onerous or highly dilutive. TXNM's ability to refinance its indebtedness will depend on the capital markets and its financial condition at such time. TXNM may not be able to engage in any of these activities or engage in these activities on desirable terms, which could result in a default on its debt obligations.

Table of Contents

**Despite TXNM's current consolidated debt levels, TXNM and its subsidiaries may still incur substantially more debt or take other actions which would intensify the risks discussed above.**

Despite TXNM's current consolidated debt levels, TXNM and its subsidiaries may be able to incur substantial additional debt in the future, subject to the restrictions contained in the Merger Agreement and its debt instruments, some of which may be senior indebtedness or secured debt. TXNM is not restricted under the terms of the indentures governing the Convertible Notes or the TXNM 2025 Junior Subs from incurring additional debt, securing existing or future debt, recapitalizing its debt or taking a number of other actions. TXNM's Credit Agreement restricts its ability to incur additional indebtedness, including secured indebtedness, but if the TXNM Credit Agreement matures or is repaid, TXNM may not be subject to such restrictions under the terms of any subsequent indebtedness.

**The fundamental change repurchase features of the Convertible Notes may delay or prevent an otherwise beneficial attempt to acquire TXNM.**

Certain provisions in the indenture governing the Convertible Notes may make it more difficult or expensive for a third party to acquire TXNM. For example, the indenture governing the Convertible Notes requires TXNM, subject to certain exceptions, to repurchase the Convertible Notes for cash upon the occurrence of a fundamental change (as defined in the indenture) and, in certain circumstances, to increase the conversion rate for a holder that converts its Convertible Notes in connection with a make-whole fundamental change (as defined in the indenture). Such additional costs may have the effect of delaying or preventing a takeover of TXNM that would otherwise be beneficial to investors.

**TXNM may be unable to meet its ongoing and future financial obligations and to pay dividends on its common stock if its subsidiaries are unable to pay dividends or distributions to TXNM.**

TXNM is a holding company and has no operations of its own. TXNM's ability to meet its financial obligations and to pay dividends on its common stock primarily depends on the net earnings and cash flows of PNM and TNMP and their capacity to pay upstream dividends or distributions. Prior to providing funds to TXNM, PNM and TNMP have financial and regulatory obligations that must be satisfied, including among others, debt service and, in the case of PNM, preferred stock dividends.

The NMPRC has placed certain restrictions on the ability of PNM to pay dividends to TXNM, including that PNM cannot pay dividends that cause its debt rating to fall below investment grade. The NMPRC has also restricted PNM from paying dividends in any year, as determined on a rolling four-quarter basis, in excess of net earnings without prior NMPRC approval. PNM is permitted to pay dividends to TXNM from prior equity contributions made by TXNM. Additionally, TXNM's financing agreements generally include a covenant to maintain a debt-to-capitalization ratio that does not exceed 70%, and PNM and TNMP's financing arrangements generally include a covenant to maintain debt-to-capitalization ratios that do not exceed 65%. PNM also has various financial covenants that limit the transfer of assets, through dividends or other means and the Federal Power Act imposes certain restrictions on dividends paid by public utilities, including that dividends cannot be paid from paid-in capital. The Merger Agreement also restricts TXNM from paying dividends outside of regular quarterly dividends.

Further, the ability of TXNM to declare dividends depends upon the extent to which cash flows will support dividends, the Company's financial circumstances and performance, economic conditions in the U.S. and in the Company's service areas, future growth plans and the related capital requirements, and other business considerations. Declaration of dividends may also be affected by decisions of the NMPRC, FERC, and PUCT in various regulatory cases currently pending or that may be docketed in the future, including the outcome of appeals of those decisions, conditions imposed by the NMPRC, PUCT, or Federal Power Act, and the effect of federal regulatory decisions and legislative acts.

**Disruption in the credit and capital markets may impact the Company's strategy and ability to raise capital.**

TXNM and its subsidiaries rely on access to both short-term and longer-term capital markets as sources of liquidity for any capital requirements not satisfied by cash flow from operations. In general, the Company relies on its short-term credit facilities as the initial source to finance construction expenditures. This results in increased borrowings under the facilities over time. The Company is currently projecting total construction expenditures for the years 2026-2030 to be $10.2 billion. If TXNM or its operating subsidiaries are not able to access capital at competitive rates, or at all, TXNM's ability to finance capital requirements and implement its strategy will be limited. Disruptions in the credit markets, which could negatively impact the Company's access to capital, could be caused by an economic recession, declines in the health of the banking sector generally or the failure of specific banks who are parties to the Company's credit facilities, deterioration in the overall health of the utility industry, the bankruptcy of an unrelated energy company, war, terrorist attacks, cybersecurity attacks, or threatened attacks.

If the Company's cash flow and credit and capital resources are insufficient to fund capital expenditure plans, the Company may be forced to delay important capital investments, sell assets, seek additional equity or debt capital, or restructure debt. In addition, insufficient cash flows and capital resources may result in reductions of credit ratings. This could negatively impact the Company's ability to incur additional indebtedness on acceptable terms and would result in an increase in the

Table of Contents

interest rates applicable under the Company's credit facilities. The Company's cash flow and capital resources may be insufficient to pay interest and principal on debt in the future. If that should occur, the Company's capital raising or debt restructuring measures may be unsuccessful or inadequate to meet scheduled debt service obligations. This could cause the Company to default on its obligations and further impair liquidity.

**Reduction in credit ratings or changing rating agency requirements could materially and adversely affect the Company's growth, strategy, business, financial position, results of operations, and liquidity.**

TXNM, PNM, and TNMP cannot be sure that any of their current credit ratings will remain in effect for any given period of time or that a rating will not be put under review for a downgrade, lowered, or withdrawn entirely by a rating agency. As discussed in MD&A - Liquidity and Capital Resources, all of TXNM, PNM, and TNMP's senior debt ratings are investment grade. Downgrades or changing requirements could result in increased borrowing costs due to higher interest rates on current borrowings or future financings, a smaller potential pool of investors, and decreased funding sources. Such conditions also could require the provision of additional support in the form of letters of credit and cash or other collateral to various counterparties.

**Declines in values of marketable securities held in trust funds for pension and other postretirement benefits, in the NDT and coal mine reclamation trusts, and in the SJGS decommissioning trust could result in sustained increases in costs and funding requirements for those obligations, which may affect operational results.**

The PNM and TNMP Pension Plans have targeted asset allocations of 50% and 70% liability matching fixed and 50% and 30% return generating income, which includes alternative income. The Company uses a strategy, known as Liability Driven Investing, which seeks to select investments that match the liabilities of the pension plans. The OPEB plans generally use the same pension fixed income and equity investment managers and utilize the same overall investment strategy as the pension plans, except there is no allocation to alternative investments and the OPEB plans have a target asset allocation of 30% equities and 70% fixed income.

The current asset allocation exposes the NDT investment portfolio to market and macroeconomic factors. Declines in market values could result in increased funding of the trusts, the recognition of losses as impairments for the NDT and coal mine reclamation trusts, SJGS decommissioning trust, and additional expense for the benefit plans. In addition, a change in GAAP required that all changes in the fair value of equity securities recorded on the Company's balance sheet be reflected in earnings, which result in increased volatility in earnings.

**Impairments of goodwill and long-lived assets of TXNM, PNM, and TNMP could adversely affect the Company's business, financial position, liquidity, and results of operations.**

The Company annually evaluates recorded goodwill for impairment. See Note 1 and the Critical Accounting Policies and Estimates section of MD&A. Long-lived assets are also assessed whenever indicators of impairment exist. Factors that affect the long-term value of these assets, including treatment by regulators in ratemaking proceedings, as well as other economic and market conditions, could result in impairments. Significant impairments could adversely affect the Company's business, financial position, liquidity, and results of operations.

**The impacts and implementation of U.S. tax reform legislation may negatively impact TXNM's, PNM's, and TNMP's businesses, financial position, results of operations, and cash flows.**

Changes in tax laws may negatively impact TXNM's, PNM's, and TNMP's businesses, financial position, results of operations, and cash flows. The Company possesses tax credits and other carryforwards, the value of which could be diminished by new laws or the Company's ability to timely utilize them. Increases in tax rates may not be immediately recoverable through PNM's and TNMP's regulated rates, reducing earnings. Tax laws and regulations may also negatively impact the relative value of some resource investments over others, making those investments less competitive.

In July 2025, President Trump signed the OBBBA, significantly altering the landscape of climate action and clean energy initiatives in the United States. The legislation revises and, in including some cases, phases out tax credits established under the IRA and also includes restrictions on the availability of credits for "foreign entities of concern," as such term is used in the OBBBA.

***Governance Risks***

**Provisions of TXNM's organizational documents, as well as several other statutory and regulatory factors, will limit another party's ability to acquire TXNM and could deprive TXNM's shareholders of the opportunity to receive a takeover premium for shares of TXNM's common stock.**

In addition to the restrictions in the Merger Agreement discussed above, TXNM's restated articles of incorporation and by-laws include a number of provisions that may have the effect of discouraging persons from acquiring large blocks of

Table of Contents

TXNM's common stock or delaying or preventing a change in control of TXNM. The material provisions that may have such an effect include:

- Authorization for the Board to issue TXNM's preferred stock in series and to fix rights and preferences of the series (including, among other things, voting rights and preferences with respect to dividends and other matters)
- Advance notice procedures with respect to any proposal other than those adopted or recommended by the Board
- Provisions specifying that only a majority of the Board, the chairman of the Board, the chief executive officer, or holders of at least one-tenth of all of TXNM's shares entitled to vote may call a special meeting of shareholders

Under the New Mexico Public Utility Act, NMPRC approval is required for certain transactions that may result in TXNM's change in control or exercise of control, including ownership of 10% or more of TXNM's voting stock. PUCT approval is required for changes to the ownership of TNMP or its parent and certain other transactions relating to TNMP. Certain acquisitions of TXNM's outstanding voting securities also require FERC approval.

## ITEM 1B. UNRESOLVED STAFF COMMENTS

None.

## ITEM 1C. CYBERSECURITY

***Cybersecurity Risk Management and Strategy***

**Process for identifying, assessing, and managing cybersecurity risks**

From an overall enterprise risk management perspective, the Company views cybersecurity as a "tier 1" risk and considers it one of its top priorities. The Company's cybersecurity program (the "Cybersecurity Program") includes processes to identify, assess, and manage material risks from cybersecurity threats. The Cybersecurity Program utilizes a risk-based approach and includes written cybersecurity and information technology policies and procedures, including a cybersecurity incident response plan. The Company's Cybersecurity Program is led by its Vice President and Chief Information Officer ("CIO"), who oversees the management and development of all business technology and cyber and physical security for the Company and its subsidiaries. The CIO is also responsible for federal reliability standards compliance, critical infrastructure protection and crisis management resilience.

The Cybersecurity Program is a robust, enterprise-wide, risk-based security program that adheres to the guidelines of the National Institute of Science and Technology ("NIST") Cybersecurity Framework for Protecting Critical Infrastructure to define material risks and establish controls designed to protect, detect, respond to, and recover from cybersecurity incidents. To protect the most critical systems, the Company also complies with the NERC Critical Infrastructure Protection Standards.

The Company regularly assesses control results through third party audits, penetration tests and internal assessments to continuously improve cyber protections and data privacy controls. The Company partners with government and industry peers in several cybersecurity programs to share information and provide mutual assistance in the event of a cyber-attack. Supply chain risk of third-party suppliers is also assessed as part of the procurement process and incorporates cybersecurity contractual stipulations in its supplier contracts. The Company remains focused on increasing cybersecurity awareness and is continuously evaluating and implementing effective, up-to-date technologies and processes to enhance its cybersecurity capabilities.

The Company engages in the periodic assessment and testing of the Company's policies, standards, processes and practices that are designed to address cybersecurity threats and incidents. These efforts include a wide range of activities, including audits, assessments, tabletop exercises, threat modeling, vulnerability testing, and other exercises focused on evaluating the effectiveness of the Company's cybersecurity measures and planning. The Company regularly engages third parties to perform assessments on the Company's cybersecurity measures, including information security maturity assessments, audits and independent reviews of the Company's information security control environment and operating effectiveness. The results of such assessments, audits, and reviews are reported to the Audit and Ethics Committee and the Board, and the Company adjusts its cybersecurity policies, standards, processes and practices as necessary based on the information provided by these assessments, audits, and reviews.

***Risks from cybersecurity threats***

The information set forth under Item 1A, "Risk Factors" — "*TXNM, PNM, and TNMP are subject to information security breaches and risks of unauthorized access to their information and operational technology systems as well as physical threats to assets.*" on page A-14 of this Annual Report on Form 10-K is hereby incorporated by reference. As of December 31, 2025, our financial condition, results of operations or business strategy have not been materially affected by risks from cybersecurity threats, including as a result of previously identified cybersecurity incidents, but we cannot provide assurance that they will not be materially affected in the future by such risks or any future material incidents.

Table of Contents

*Cybersecurity Governance*

**Management's role in assessing and managing the Company's material risks from cybersecurity threats**

The Company's management is responsible for managing cybersecurity risk and bringing to the Audit and Ethics Committee and Board's attention the most significant cybersecurity risks facing the Company. The CIO oversees the Company's Cybersecurity Program and reports to the Company's Senior Vice President of Corporate Services. The CIO leads the development, implementation, and enforcement of security policies and data breach resiliency plans, as well as works with internal and external cybersecurity and IT teams to monitor and maintain the security of the Company's IT infrastructure. The CIO is supported by a team of enterprise information, system security, and risk professionals. The CIO receives reports on cybersecurity threats on an ongoing basis and regularly reviews risk management measures implemented by the Company to identify and mitigate data security and cybersecurity risks. The CIO updates senior management on these matters and works closely with the General Counsel to oversee compliance with legal, regulatory, and contractual security requirements. The CIO has significant technology and program management experience and has served many years in the Company's information technology organization. The CIO is a Certified Project Management Professional and Change Management Registered Practitioner. In addition, the CIO has a B.B.A. in business computer systems and an MBA.

**Board oversight of risks from cybersecurity threats**

Cybersecurity risk oversight remains a priority for the Board who is responsible for oversight of the Company's information security program, including compliance and risk management and the review of cybersecurity risks. The Board has adopted a Cyber Risk Policy which is overseen by the Audit and Ethics Committee. The Audit and Ethics Committee's oversight of cyber risk management assists in the Board's assessment of the adequacy of resources, funding, and focus within the Company with respect to cyber risk. Specifically, the Audit and Ethics Committee assist the Board in its oversight responsibilities regarding the company-wide security risk management practices, including overseeing the practices, procedures, and controls that management uses to identify, assess, respond to, remediate, and mitigate risks related to cybersecurity. The Audit and Ethics Committee provide oversight of management's efforts to identify and mitigate cyber risk. Specifically, senior leadership, including the CIO, regularly briefs the Audit and Ethics Committee and the Board on Company's cybersecurity posture. In executing its risk oversight duties, the Audit and Ethics Committee and the Board can and does access internal and external expertise regarding the Company's challenges and opportunities related to cybersecurity.

## ITEM 2. PROPERTIES

**TXNM**

The significant properties owned by TXNM include those owned by PNM and TNMP and are disclosed below.

**PNM**

See Sources of Power in Part I, Item 1 Business above for information on PNM's owned and leased capacity in electric generating stations. As of December 31, 2025, PNM owned, or jointly owned, 3,450 miles of electric transmission lines, 5,774 miles of distribution overhead lines, 6,251 miles of underground distribution lines (excluding street lighting), and 250 substations. PNM's electric transmission and distribution lines are generally located within easements and rights-of-way on public, private, and Native American lands. PNM owns and leases communication, office and other equipment, office space, vehicles, energy storage facilities, and real estate. PNM also owns service and office facilities throughout its service territory. See Note 8 for additional information concerning leases.

**TNMP**

TNMP's facilities consist primarily of transmission and distribution facilities located in its service areas. TNMP also owns and leases vehicles, service facilities, and office locations throughout its service territory. As of December 31, 2025, TNMP owned 1,049 miles of overhead electric transmission lines, 7,346 miles of overhead distribution lines, 1,633 miles of underground distribution lines, and 106 substations. Substantially all of TNMP's property is pledged to secure its first mortgage bonds. See Note 7.

## ITEM 3. LEGAL PROCEEDINGS

See Note 16 and Note 17 for information related to the following matters for TXNM, PNM, and TNMP, incorporated in this item by reference.

**Note 16**

- TXNM – Merger Related Litigation

Table of Contents

**Note 17**

- TXNM – Merger Related Regulatory Applications
- PNM – Integrated Resource Plans
- PNM – Grid Modernization Plan
- PNM – BESS Project
- PNM – SB 170 Projects
- PNM – Rio Puerco-Pajarito-Prosperity CCN
- TNMP – Base Rate Review
- TNMP – Transmission Cost of Service Rates
- TNMP – Periodic Distribution Rate Adjustment

**ITEM 4. MINE SAFETY DISCLOSURES**

Not Applicable.

**SUPPLEMENTAL ITEM – INFORMATION ABOUT EXECUTIVE OFFICERS OF TXNM ENERGY, INC.**

All officers are elected annually by the Board of TXNM. Executive officers, their ages as of February 13, 2026, and offices held for the past five years are as follows:

| Name | Age | Office | Initial Effective Date |
|---|---|---|---|
| P. K. Collawn | 67 | Executive Chairman | July 2025 |
| | | Chairman and Chief Executive Officer | May 2022 |
| | | Chairman, President, and Chief Executive Officer | January 2012 |
| J. D. Tarry | 55 | President and Chief Executive Officer | July 2025 |
| | | President and Chief Operating Officer | May 2022 |
| | | Senior Vice President and Chief Financial Officer | January 2020 |
| H. E. Monroy | 47 | Senior Vice President and Chief Financial Officer | May 2025 |
| | | PNM Vice President, Regulatory | December 2023 |
| | | PNM Vice President, Regulatory and TXNM Corporate Controller | July 2022 |
| | | Vice President and Corporate Controller | January 2020 |
| B. G. Iverson | 63 | General Counsel, Senior Vice President Regulatory and Public Policy, and Corporate Secretary | September 2024 |
| | | Senior Vice President, General Counsel and Chief Compliance Officer at Black Hills Corporation | April 2016 |
| M. M. Jacobson | 47 | Senior Vice President, Corporate Services | April 2025 |
| | | Partner of Forward Solutions, LLC | June 2022 |
| | | Owner of Monique and Associates, LLC | January 2019 |

Table of Contents

## PART II

### ITEM 5. MARKET FOR TXNM'S COMMON EQUITY, RELATED STOCKHOLDER MATTERS, AND ISSUER PURCHASES OF EQUITY SECURITIES

TXNM's common stock is traded on the New York Stock Exchange under the symbol "TXNM".

Dividends on TXNM's common stock are declared by its Board. The timing of the declaration of dividends is dependent on the timing of meetings and other actions of the Board. This has historically resulted in dividends considered to be attributable to the second quarter of each year being declared through actions of the Board during the third quarter of the year. The Board declared dividends on common stock considered to be for the second quarter of $0.4075 per share in July 2025 and $0.3875 per share in July 2024. The Board declared dividends on common stock considered to be for the third quarter of $0.4075 per share in September 2025 and $0.3875 per share in September 2024. In December 2025, the Board increased the quarterly dividend from $0.4075 to $0.4225 per share. In December 2024, the Board increased the quarterly dividend from $0.3875 to $0.4075 per share. TXNM targets long-term earnings growth with a dividend payout ratio between 50 and 60 percent of ongoing earnings, which is a non-GAAP financial measure, that excludes from GAAP earnings certain non-recurring, infrequent, and other items that are not indicative of fundamental changes in the earnings capacity of the Company's operations. TXNM uses ongoing earnings to evaluate the operations of the Company and to establish goals, including those used for certain aspects of incentive compensation, for management and employees. See Note 6 for a discussion on limitations on the payments of dividends and the payment of future dividends, as well as dividends paid by PNM and TNMP.

On August 2, 2024, TXNM increased the number of authorized shares of its common stock from 120,000,000 to 200,000,000.

On February 13, 2026, there were 6,354 holders of record of TXNM's common stock. There have been no issuer purchases of equity securities. All of PNM's and TNMP's common stock is owned by TXNM and is not listed for trading on any stock exchange.

See Part III, Item 12. Security Ownership of Certain Beneficial Owners and Management and Related Stockholder Matters.

**Preferred Stock**

As of December 31, 2025, PNM has 115,293 shares of cumulative preferred stock outstanding. PNM is not aware of any active trading market for its cumulative preferred stock. Quarterly cash dividends were paid on PNM's outstanding cumulative preferred stock at the stated rates during 2025 and 2024. TXNM and TNMP do not have any preferred stock outstanding.

**Sales of Unregistered Securities**

None.

### ITEM 6. [RESERVED]

### ITEM 7. MANAGEMENT'S DISCUSSION AND ANALYSIS OF FINANCIAL CONDITION AND RESULTS OF OPERATIONS

The following Management's Discussion and Analysis of Financial Condition and Results of Operations for TXNM is presented on a combined basis, including certain information applicable to PNM and TNMP. This report uses the term "Company" when discussing matters of common applicability to TXNM, PNM, and TNMP. The MD&A for PNM and TNMP is presented as permitted by Form 10-K General Instruction I (2) as amended by the FAST Act. For additional information related to the earliest of the two years presented please refer to the Company's 2023 Annual Report on Form 10-K. A reference to a "Note" in this Item 7 refers to the accompanying Notes to Consolidated Financial Statements included in Part II, Item 8, unless otherwise specified. Certain of the tables below may not appear visually accurate due to rounding.

***MD&A FOR TXNM***

**EXECUTIVE SUMMARY**

**Overview**

TXNM is a holding company with two regulated electric utilities, PNM and TNMP, serving approximately 842,000 residential, commercial, and industrial customers New Mexico and Texas. TXNM was incorporated in the State of New Mexico in 2000 and its common stock trades on the New York Stock Exchange under the symbol TXNM.

Table of Contents

**Recent Developments**

*Merger*

On May 18, 2025, TXNM, Parent, and Merger Sub (both Parent and Merger Sub are affiliates of Blackstone Infrastructure) entered into the Merger Agreement pursuant to which Merger Sub will merge with and into TXNM, with TXNM surviving the Merger as a direct, wholly-owned subsidiary of Parent. Pursuant to the Merger Agreement, each issued and outstanding share of the common stock of TXNM (other than those listed in Note 22) at the Effective Time will be converted into the right to receive $61.25 in cash, without interest.

The proposed Merger has been unanimously approved by the Board and was approved by the TXNM shareholders at a special meeting held on August 28, 2025. The waiting period under the HSR Act in connection with the Merger has expired without any objections or concerns having been raised, both the FCC and FERC approved the application, and the PUCT approved the unanimous settlement, satisfying four of the conditions to closing of the Merger Agreement. Consummation of the Merger remains subject to the satisfaction or waiver of certain customary conditions, including, without limitation, no Legal Restraint, and the receipt of certain required regulatory approvals (including the NMPRC and the NRC). TXNM has filed applications for regulatory approval of the Merger with the NMPRC (Note 17). The Merger Agreement does not contain any financing condition and is currently expected to close in the second half of 2026.

On December 11, 2025, TXNM and Blackstone Infrastructure reached a unanimous settlement with parties in the Merger proceeding filed with the PUCT, that was approved on February 6, 2026. On February 20, 2026, FERC approved the proposed Merger rejecting claims related to data centers, private equity ownership, and speculative cross-subsidization relying on existing state ring-fencing protections in New Mexico and Texas. See Note 17.

**Vision, Values and Business Objectives**

TXNM's vision is to create a clean and bright energy future while fulfilling its purpose to work together with customers and communities to meet their energy needs. TXNM's core values of Safety, Caring and Integrity are the foundation for the Company's business objectives focused on safety excellence and customer satisfaction, including reliability. To reach these objectives, the Company is committed to:

- Preparing our workforce with the knowledge and skills to thrive in a customer-focused world
- Purposefully delivering an intentional customer experience that exceeds our evolving customer and stakeholder expectations
- Enabling an environmentally sustainable future and deploying technologically advanced solutions that empower and benefit customers
- Demonstrating the relationship between customer excellence and our dedicated focus on financial strength

Meeting the business objectives above will drive key financial results:

- Earning authorized returns on regulated businesses
- Delivering at or above industry-average long-term earnings growth, with a dividend payout ratio between 50 and 60 percent of earnings
- Maintaining investment grade credit ratings

**Business Focus**

To achieve the Company's business objectives, focus is directed in key areas: Safe, Reliable and Affordable Power; Utility Plant Investments; Superior Customer Experience; Environmentally Responsible Power; and Stakeholder and Community Engagement. The Company works closely with its stakeholders to ensure that resource plans and infrastructure investments benefit from robust public dialogue and balance the diverse needs of our communities. Equally important is the focus of TXNM's utilities on customer satisfaction and community engagement.

*Safe, Reliable, and Affordable Power*

Safety is the first priority of our business and a core value of the Company. TXNM utilizes a Safety Management System to provide clear direction, objectives and targets for managing safety performance and minimizing risks and empowers employees to "Be the Reason Everyone Goes Home Safe".

TXNM measure's reliability and benchmark performance of PNM and TNMP against other utilities using industry-standard metrics, including System Average Interruption Duration Index ("SAIDI") and System Average Interruption Frequency Index ("SAIFI"). PNM's and TNMP's investment plans include projects designed to support reliability and reduce the amount of time customers are without power.

TXNM and its utilities are aware of the important roles they play in enhancing economic vitality in their service

Table of Contents

territories. Management believes that maintaining strong and modern electric infrastructure is critical to ensuring reliability and supporting economic growth. When contemplating expanding or relocating their operations, businesses consider energy affordability and reliability to be important factors. PNM and TNMP strive to balance service affordability with infrastructure investment to maintain a high level of electric reliability and to deliver a safe and superior customer experience. Investing in PNM's and TNMP's infrastructure is critical to ensuring reliability and meeting future energy needs. Both utilities have long-established records of providing customers with safe and reliable electric service.

PNM participates in the EIM, a real-time wholesale energy trading market operated by the CAISO, that enables participating electric utilities to buy and sell energy. The EIM aggregates the variability of electricity generation and load for multiple balancing authority areas and utility jurisdictions. In addition, the EIM facilitates greater integration of renewable resources through the aggregation of flexible resources by capturing diversity benefits from the expanding geographic footprint and the expanded potential uses for those resources. The NMPRC approved collection of PNM's regulatory asset to recover the initial capital investments and implementation and ongoing costs necessary to participate in the EIM in the 2024 Rate Change final order. PNM passes the cost savings achieved by participating in the EIM through to customers under PNM's FPPAC. PNM also plans to join the EDAM, which is a voluntary day-ahead regional market that expands on CAISO's EIM market, as early as 2027.

PNM joined the WRAP in April 2023 to help ensure regional resource availability is visible and coordinated in the event PNM customers are critically impacted by a resource emergency. WRAP is currently in the non-binding phases of the program, which is expected to continue through the summer of 2027. PNM has successfully complied with all WRAP requirements to date and fully supports the need to align a resource adequacy program with coordination between power providers. However, on October 28, 2025, PNM notified the Western Power Pool that it has elected to withdraw from WRAP and will not proceed into the binding phase. PNM will seek to align resource adequacy coordination with others in the EDAM regional market to maximize customer benefits.

In May 2024, PNM filed its updated WMP and its PSPS Plan with the NMPRC. The plans enhance Company wildfire prevention efforts and identify conditions for preventive shutoffs. PNM's WMP addresses the increasing severity and frequency of extreme weather events and increasing wildfire risk and is focused on situational awareness, field personnel safety practices and operational wildfire mitigation strategies to prevent the accidental ignition of wildfires. PNM's PSPS Plan is designed to proactively de-energize electrical facilities in identified areas of extreme wildfire risk under certain conditions to reduce the potential of those electrical facilities becoming a wildfire ignition source or contributing to the spread of wildfires.

In June 2024, TNMP filed its WMP with the PUCT in response to recent wildfire events impacting the electric utility industry and the customers it serves. TNMP's WMP establishes a wildfire risk awareness and mitigation strategy that becomes part of a fire safe culture across the Company. The WMP increases grid awareness and serves as a blueprint to help reduce the risk of the accidental ignition of wildfires. The WMP also provides new strategies, technologies, and operating guidelines to enhance grid resiliency and public safety.

*Utility Plant Investments*

During the 2024 and 2025 periods, PNM and TNMP together invested $2.4 billion in utility plants, including transmission and distribution systems, substations, power plants, and nuclear fuel. Investment plans emphasize new investments in transmission and distribution infrastructure to support growing demand with grid reliability and resilience and to deliver clean energy. The Company has been improving the diversification of its rate base among regulatory jurisdictions, moving TNMP and FERC transmission rate base to over half of the consolidated rate base.

Investments at TNMP support the continued high growth across each region of its service territory. Economic growth across Texas continues to push the demands on TNMP's system to new levels, including a new system peak in September 2025. In 2023, the Texas legislature passed a series of bills aimed at encouraging investments to enhance grid reliability and resilience, while the PUCT continues to develop rules in support of this new legislation. TNMP will continue to submit filings for recovery of its investments, in accordance with these new rules, in addition to the existing rate recovery mechanisms. In June 2025, HB 5247 added Section 36.216 to PURA, which immediately authorized certain electric utilities, including TNMP, to offset depreciation, property tax expenses, and carrying costs with alternative revenue and recognize a regulatory asset for qualifying investments until the following year in which they would file a single, annual proceeding with the PUCT.

Investments at PNM are aimed at supporting economic development and advancing the infrastructure beyond its original architecture to a more flexible and redundant system accommodating growing amounts of intermittent and distributed generation resources and integrating evolving technologies that provide long-term customer value. New Mexico's clean energy future depends on a reliable, resilient, secure grid to deliver an evolving mix of energy resources to customers. A CCN requesting approval of a new transmission line and the application seeking to defer costs of two economic development projects filed under SB 170 support economic development and projects included in the Grid Modernization Plan will improve customers' ability to customize their use of energy and modernize PNM's electric grid through infrastructure and technology improvements.

Table of Contents

See the subheading Capital Requirements included in the full discussion of Liquidity and Capital Resources below for additional discussion of the Company's projected capital requirements.

*Superior Customer Experience*

The Company strives to deliver a superior customer experience. With reliability being the primary role of a transmission and distribution service provider in Texas' deregulated market, TNMP continues to focus on keeping end-users updated about interruptions and encouraging consumer preparation when severe weather is forecasted. In 2024, TNMP made significant strides in improving customer satisfaction related to power outages by providing a more user-friendly experience on TNMP's outage map information system, making it easier for customers to access real-time outage information. In addition, TNMP introduced a new system that allows customers to receive outage alerts through multiple communication channels to enhance transparency and to ensure customers stay informed during outages. In September 2024, TNMP sent employees to assist in restoring power to those communities impacted by Hurricane Helene and in January 2025 TNMP was announced as an Emergency Response Award recipient by the Edison Electric Institute ("EEI"), an association representing all US investor-owned electric companies. The Emergency Response Awards recognize recovery and assistance efforts of electric companies following service disruptions caused by extreme weather or other natural events.

In 2025, PNM continued to hold in-person engagements with residential and business customers through customer advisory councils. These engagements have helped PNM to build and improve customer relationships and have provided PNM with valuable customer insights to gauge customer interest levels towards programs and services to be highly customer centric. Additionally, PNM continues to focus its efforts on enhancing the customer experience through customer service improvements, including enhanced digital payment options, strategic customer outreach, and improved communications. In early 2025, PNM introduced a redesigned customer bill to make it easier for customers to understand their bill as a part of a broader commitment to improve transparency and usability. While the electric utility industry continues to experience declines in customer satisfaction as measured by J.D. Power, PNM's ranking in 2025 remained stable, reflecting the Company's sustained efforts to improve the customer journey through a more seamless and customer-friendly experience. PNM continues to focus on addressing energy affordability by promoting participation in utility programs among households with high energy burden to offset high bills. PNM has also implemented efforts to increase participation in low-income energy efficiency programs, including providing additional aid through the PNM Good Neighbor Fund, partnering with state agencies to make it easier to access funding, improving access to clean energy through expanded outreach and communication, and implementing low-income transportation electrification programs. As a result of PNM's efforts, 6,509 families in need received emergency assistance through the PNM Good Neighbor Fund for the year ended December 31, 2025.

*Environmentally Responsible Power*

TXNM has a long-standing record of environmental stewardship. PNM's environmental focus is in three key areas:

- Developing strategies to provide reliable and affordable power while transitioning to a 100% carbon-free generating portfolio by 2040
- Preparing PNM's system to meet New Mexico's increasing renewable energy requirements as cost-effectively as possible
- Increasing energy efficiency participation

TXNM's corporate website (www.txnmenergy.com) includes a dedicated section providing key environmental and other information related to PNM's and TNMP's operations, including information that collectively demonstrates the Company's commitment to sustainability. This information highlights plans for PNM to be coal-free no later than 2031 and to achieve a carbon-free generating portfolio by 2040. Achieving our goal of carbon-free by 2040 is dependent on balancing reliability, cost considerations, and maturity of emerging technologies.

PNM's Grid Modernization Plan is a major step forward in providing reliable, affordable and sustainable energy. As part of that plan, PNM will promote energy equity by installing technology like smart meters and making distribution upgrades in low-income areas first in order to allow lower-income customers to gain insights into their energy usage to improve affordability and create fairer access to energy. In addition, PNM's Time-of-Day pilot approved in the 2024 Rate Change final order incentivizes customers, through price signals, to use energy during the day when renewable generation is abundant.

The IRA provided benefits for TXNM and its customers by extending and enhancing clean energy incentives such as the investment tax credit and production tax credit. As the Company continues its transition away from carbon emitting sources, these credits reduce the cost of renewable investments. In addition, the IRA includes a new production tax credit for existing nuclear facilities that may create an added benefit for PNM's ownership in the carbon-free PVNGS. Other IRA provisions encourage transportation electrification with new EV credits and added incentives for vehicle charging infrastructure. In July 2025, the OBBBA was enacted and is expected to accelerate the phase-out of certain IRA energy tax credits and restrict the availability of credits for "foreign entities of concern," as such term is used in the OBBBA.

Table of Contents

*Electric Vehicles*

TXNM's sustainability goals include plans for additional emissions reductions through the electrification of its vehicle fleet. Growing the number of EVs within the Company's fleet will benefit the environment and lower fuel costs furthering the commitment to sustainability. Under the commitment, existing fleet vehicles will be replaced as they are retired with an increasing percentage of EVs.

To demonstrate TXNM's commitment to increase the electrification of vehicles in its service territory, PNM implemented its first TEP in 2022 and received approval of its 2024-2026 TEP in 2024. PNM has launched new transportation electrification offerings that support customer adoption of EVs by addressing barriers to adoption. PNM's TEP program budget provides financial support to residential and non-residential customers towards the purchase of EV chargers and/or site make-ready costs, as well as customer education and outreach on EV-specific electricity rates to encourage charging during off-peak periods. More than 25% of the program budget is dedicated to low- and moderate-income customers to plan for an equitable transition to an electrified transportation sector.

PNM participates in the National Electric Highway Coalition, which plans to build fast-charging ports along major U.S. travel corridors. The coalition, with approximately 50 investor-owned electric companies is committed to providing EV fast charging ports that will allow the public to drive EVs with confidence throughout the country's major roadways. To support this initiative, PNM's TEP program includes the installation of a charging network along major roadways in New Mexico.

*Renewable Energy and Energy Storage*

PNM's utility-owned solar and energy storage capacity, as well as solar, energy storage, wind, and geothermal procurements from facilities in service as of December 31, 2025, have a total net generation capacity of 3,244 MW. In addition to PNM's owned and third-party contracted solar facilities, PNM also has a customer distributed solar generation program that represented 334.1 MW at December 31, 2025. The NMPRC has approved plans for PNM to procure energy and RECs from additional resources to serve retail customers and a data center located in PNM's service territory. PNM's approved resources have a generation capacity of 1,453 MW. This includes approximately 285 MW of additional capacity under the Community Solar Act which will provide customers an additional option of accessing solar energy.

PNM will continue to seek approval to procure renewable resources as needed to meet forecasted peak load requirements to serve its customers and New Mexico's RPS and carbon-free resource requirements, while balancing the impact to customers' electricity costs.

*Energy Efficiency*

Energy efficiency plays a significant role in helping to keep customers' electricity costs low while meeting their energy needs and is one of the Company's approaches to supporting environmentally responsible power. PNM's and TNMP's energy efficiency and load management portfolios continue to achieve robust results. In 2025, incremental energy saved as a result of participation in PNM's portfolio of energy efficiency programs is estimated to be 84 GWh. This is equivalent to the annual consumption of approximately 11,639 homes in PNM's service territory. PNM's load management and energy efficiency programs also help lower peak demand requirements. In 2025, TNMP's incremental energy saved as a result of participation in TNMP's energy efficiency programs is estimated to be approximately 20 GWh. This is equivalent to the annual consumption of approximately 2,762 homes in TNMP's service territory, estimated using a national average avoided emissions rate. TNMP's high-performance homes residential new construction energy efficiency program has earned the Energy Star Partner of the Year award for 8 years, including 6 years receiving the Sustained Excellence Award, recognizing long-term commitment to fighting climate change and protecting public health through energy efficiency. For information on PNM's and TNMP's energy efficiency filing with the NMPRC and PUCT see Note 17.

*Water Conservation and Solid Waste Reduction*

PNM continues to make progress in its efforts to reduce the amount of fresh water used to make electricity. Continued growth in PNM's solar and wind energy resources, energy efficiency programs, and innovative uses of air-cooling technology have contributed to this reduction. Water usage has continued to decline as PNM has substituted less fresh-water-intensive generation resources to replace SJGS. As the Company moves forward with its mission to achieve carbon-free generation, it expects that more significant water savings will be gained. Shutting down SJGS in 2022 and Four Corners in 2031 will allow the Company to reach our goals for reduced freshwater use at 80% by 2035 and 90% by 2040 from 2005 levels. Focusing on responsible stewardship of New Mexico's scarce water resources improves PNM's water-resilience in the face of persistent drought and ever-increasing demands for water to spur the growth of New Mexico's economy.

In addition to the above areas of focus, the Company is working to reduce the amount of solid waste going to landfills through increased recycling and reduction of waste. In 2025, 18 of the Company's 22 facilities met or exceeded the solid waste diversion goal of a 65% diversion rate.

Table of Contents

*Stakeholder and Community Engagement*

The Company is committed to fostering relationships with its customers, stakeholders, and communities. Through outreach, collaboration, and various community-oriented programs, the Company has demonstrated a commitment to building productive relationships with stakeholders, including customers, community partners, regulators, intervenors, legislators, and shareholders. Local relationships and one-on-one communications remain two of the most valuable ways both PNM and TNMP connect with their stakeholders. Both companies maintain long-standing relationships with governmental representatives and key electricity consumers to ensure that these stakeholders are updated on Company investments and initiatives. Key electricity consumers also have dedicated Company contacts that support their important service needs.

The Company utilizes a number of communications channels and strategic content to serve and engage its many stakeholders. PNM's website provides the details of major regulatory filings, including general rate requests, as well as the background on PNM's efforts to maintain reliability, keep prices affordable, and protect the environment. The website is also a resource for information about PNM's operations and community outreach efforts to customers on various topics such as education, outage alerts, safety, wildfire safety, customer service, community partnerships in philanthropic projects, and plans for building a sustainable energy future for New Mexico and to transition to a carbon-free generating portfolio. PNM also leverages social media to communicate about some of these topics with certain customers. TNMP's website provides information on customized energy efficiency programs and TNMP rates, in addition to other community outreach information. As discussed above, TXNM's corporate website includes a dedicated section providing additional information regarding the Company's commitment to sustainability.

Throughout 2025, PNM held in-person community events focused on wildfire safety and educating customers about the PSPS process and wildfire mitigation efforts to protect the public. These gatherings are designed to share critical information, coordinate with local resources, and listen to feedback from local communities. PNM hosted four events in High Fire Risk Areas ("HFRA") across New Mexico in 2025 and expects to host similar events in 2026. In addition, PNM included local emergency managers in its periodic meetings, referred to as "wildfire tabletops," in 2025. Each of these engagements builds and strengthens our preparedness as a Company for wildfire prevention and response.

TXNM has a long tradition of supporting the communities that it serves in New Mexico and Texas. During the three years ended December 31, 2025, TXNM, through corporate giving, contributed $8.7 million to civic, educational, environmental, tribal, low income, and economic development organizations. Additionally, the PNM Resources Foundation (the "Foundation") has provided an annual average of $1.2 million in grant funding over the past three years across New Mexico and Texas. Throughout 2025, the Foundation focused on grants for wellness and athletic activities within the community and grants for the environment. These grants help nonprofits innovate or sustain programs to grow and develop their missions, develop and implement environmental programs, and provide educational opportunities. The Foundation continues to expand its matching and volunteer grant programs and the annual amount of matching donations available to each of its employees. The Foundation has also approved an increase to the amount awarded to employees through the employee crisis management fund, which provides our employees with financial support for basic living needs during catastrophic emergencies and times of crises. PNM collaborated with community foundations to help support the effort and direct funds where they were most needed for those who have been affected by the wildfires, floods and hurricanes in surrounding communities in addition to supporting law enforcement and first responders.

TXNM recognizes its responsibility to support programs and organizations that enrich the quality of life across its service territories and seeks opportunities to further demonstrate its commitment in these areas as needs arise. In response to community needs, TXNM partners with other corporate funders to support nonprofits and small businesses. TXNM also collaborates on community projects, low-income customer assistance programs, and employee volunteerism.

PNM stands out as one of the few investor-owned utilities operating a tribal relations office, which is focused on serving and collaborating with 18 of the 23 sovereign nations in New Mexico and the Southwest. PNM created the Navajo Nation Workforce Training Scholarship Program to provide support for Navajo tribal members and to encourage the pursuit of education and training in existing and emerging jobs in the communities in which they live. PNM has invested in paid summer college engineering internship programs for American Indian students in the greater Albuquerque area, established the PNM Pueblo Education Scholarship and Endowment to invest in higher education for Native American Indian students, and supported the development of an entrepreneur complex located in Albuquerque and operated by the Indian Pueblo Cultural Center. PNM continues to partner with the Navajo Nation in the Light Up Navajo project, piloted in 2019 and modeled as a mutual aid project to connect Navajo homes without electricity to the power grid. PNM is one of 44 utilities across 16 states to participate in improving the quality of life for families by bringing electricity to over 700 homes since inception of the project. PNM has also partnered with New Mexico universities to enhance intern programs and developed a business coalition model to drive economic development through intern partnerships.

Employee volunteers are the lifeblood of a healthy corporate culture. Community giving through volunteers' time and effort is at the heart of employee engagement. Throughout 2025, the Company held large-scale volunteer events, working alongside nonprofits, schools, and vulnerable communities throughout New Mexico and Texas. More than 640 employees in both states participated in the annual "Day of Service," a workday event encouraging employee volunteerism and serving more

Table of Contents

than 40 organizations. Throughout the year, employees volunteer their time generously through independent volunteer activities and board participation. Employees strengthen community resilience by giving more than 4,000 volunteer hours each year to support the health, safety, and well-being of diverse communities.

***Financial Focus***

*Earning Authorized Returns on Regulated Businesses*

TXNM's success in accomplishing its financial objectives is highly dependent on two key factors: fair and timely regulatory treatment for its utilities and the utilities' strong operating performance. The Company has multiple strategies to achieve favorable regulatory treatment, all of which have as their foundation a focus on the basics: safety, operational excellence, and customer satisfaction, while engaging stakeholders to build productive relationships. Both PNM and TNMP seek cost recovery for their investments through general rate cases, periodic cost of service filings, and various rate riders. The rates PNM and TNMP charge customers are subject to traditional rate regulation by the NMPRC, FERC, and the PUCT. Additional information about rate filings is provided in Note 17.

Fair and timely rate treatment from regulators is crucial to PNM and TNMP in earning their allowed returns and critical for TXNM to achieve its financial objectives. TXNM believes that earning allowed returns is viewed positively by credit rating agencies and that improvements in the Company's ratings could lower costs for utility customers.

*State Regulation and Legislation*

TNMP

In the 2023 and 2025 Texas Legislative sessions several bills were passed to support utility reliability and resiliency by encouraging and protecting utility infrastructure investments. Under the new legislation, TNMP filed its 2025-2027 SRP in August 2024 and filed an unopposed settlement with the PUCT in December 2024 that was approved with slight modifications in March 2025. Another bill directed ERCOT to develop reliability plans for the Permian Basin which resulted in the need for additional investments in the West Texas service territory. In 2025, HB 5247 was passed, which streamlines cost recovery for certain utilities, including TNMP, who continue to invest in the Permian Basin territory. HB 5247 allows for the offset of depreciation, property tax expenses, and carrying costs with alternative revenue, and recognition of a regulatory asset for qualifying investments that are not currently reflected in rates, until such time a single, annual proceeding can be filed to adjust non-fuel rates. These pieces of legislation demonstrate that Texas continues to encourage utility investment and prioritizes timely rate recovery. TNMP will look to prioritize investments aligned with these measures that improve the quality of service for current and future customers.

Beyond legislative actions, the regulatory framework in Texas strongly encourages investments into the grid by providing timely recovery through rate mechanisms outside of general rate cases. The PUCT has approved mechanisms that allow TNMP to recover capital invested in transmission and distribution projects without having to file a general rate case. The PUCT also approved rate riders that allow TNMP to recover amounts related to energy efficiency and third-party transmission costs. TNMP also has approximately 282,000 advanced meters across its service territory, the costs of which are being recovered through base rates.

*TNMP Base Rate Review*

In November 2025, TNMP filed the TNMP Base Rate Review with the PUCT, requesting recovery of $2.8 billion of rate base, a requested ROE of 10.4%, and a 47.54% equity ratio. The TNMP Base Rate Review also includes increases in operations and maintenance expenses that are not recovered through semi-annual TCOS and DCRF filings, excludes increases in interest expense resulting from refinancing of debt associated with the proposed Merger, and requests recovery of $20.5 million associated with Hurricane Beryl restoration costs over a five-year period. If approved by the PUCT, the new rates are expected to become effective in mid-2026. See Note 17.

PNM

The 2025 New Mexico Legislative session included several bills that were passed to support economic development, clean energy, grid modernization, and wildfire preparedness. Amongst the bills passed were companion bills: New Mexico Senate Bill 169 (the "Site Readiness Bill") and New Mexico Senate Bill 170 (the "Power Readiness Bill").

The Site Readiness Bill creates a dedicated funding mechanism and a structured process for identifying, assessing, and preparing strategic economic development sites across the state, designed to position New Mexico to compete with other states actively investing in site readiness. It appropriates approximately $24 million for the site readiness fund for site-characterization studies of proposed economic development sites and site preparations of strategic economic development sites. The Site Readiness Bill also creates the Strategic Economic Development Site Advisory Committee to advise the New Mexico Economic Development Department ("NMEDD") in selecting sites and awarding funding. The Power Readiness Bill is

Table of Contents

intended to reduce risk, lead times, and regulatory uncertainty in acquiring additional generation resources and in building large-scale infrastructure needed to competitively serve economic development customers that create jobs. It allows a public utility to annually increase generation capacity by up to 10% of the public utility's total system peak load. The Power Readiness Bill also shortens the time for regulatory approval of CCN filings for new, major infrastructure and allows a public utility to defer costs of economic development projects, placing them into a regulatory asset until a customer signs a contract or begins taking service. In December 2025, PNM filed an application for approval of two projects under the Power Readiness Bill; the Westpointe and Mesa Del Sol Substations (See Note 17).

*The New Mexico Energy Transition Act ("ETA")*

The passage of the ETA amended the REA to require utilities operating in New Mexico to have renewable portfolios equal to 40% by 2025, 50% by 2030, 80% by 2040, and 100% zero-carbon energy by 2045. Those amendments also allow for the recovery of undepreciated investments and decommissioning costs related to qualifying EGUs that the NMPRC has required be removed from retail jurisdictional rates, provided replacement resources to be included in retail rates have lower or zero-carbon emissions. The ETA provides for a transition from fossil-fueled generating resources to renewable and other carbon-free resources by allowing utilities to issue Securitized Bonds related to the retirement of certain coal-fired generating facilities to qualified investors. See additional discussion of the ETA in Notes 16 and 17 and the issuance of the ETBC I Securitized Bonds in Note 7.

*Grid Modernization Plan*

On October 17, 2024, the NMPRC issued a final order approving PNM's Grid Modernization Plan which will improve customers' ability to customize their use of energy and benefit from the electricity grid consistent with the Grid Modernization Statute. PNM's plan to modernize its electricity grid through infrastructure and technology improvements includes installing technology like smart meters and making distribution upgrades in low-income areas first in order to allow lower-income customers to gain insights into their energy usage to improve affordability and create fairer access to energy. The approved plan includes grid modernization investments of approximately $344 million for the first six years of a broader 11-year strategy. The approved rate rider will recover capital costs, operating expenses, and taxes associated with the investments included in the plan. In June 2025, the Grid Modernization Plan was updated to reflect an increase in investments from approximately $344 million to $367 million in the first six years and a decrease in projected operations and maintenance costs of approximately 18%. See Note 17.

*Integrated Resource Plan*

NMPRC rules require that investor-owned utilities file an IRP every three years. The IRP is required to cover a 20-year planning period and contain an action plan covering the first three years of that period. PNM's accepted 2023 IRP maintains a continued focus on a carbon-free energy system by 2040. The plan highlights the need for a significant sustained addition of resources over the next two decades, replacing retiring or expiring capacity and meeting concurrent load growth, while reducing the carbon intensity of PNM's portfolio.

In December 2024, PNM issued its 2029-2032 RFP for at least 900 MW of new energy resources to come online between 2029 and 2032, with at least 500 MW needed by 2030, and is anticipated to identify potential replacement resources for PNM's current natural gas generation capacity as well as PNM's ownership interest in Four Corners.

In the fourth quarter of 2025, PNM initiated its 2026 IRP process which will cover the 20-year planning period from 2026 through 2046. Consistent with historical practice, PNM is receiving public input from interested parties as part of this process. PNM expects to file its 2026 IRP with the NMPRC on or before September 1, 2026.

*2028 Resource Application*

On November 22, 2024, PNM filed an application with the NMPRC seeking approval of two 150 MW ESAs, a 167 MW PPA for the Valencia power plant, and a CCN for a 100 MW solar facility and a 30 MW battery, with a proposed additional 20 MW option, to be available to meet summer 2028 customer needs. On March 12, 2025, PNM and intervening parties filed an unopposed comprehensive stipulation with the NMPRC which supports approval of PNM's application, including the proposed option to increase the 30 MW battery by an additional 20 MW. On June 26, 2025, the NMPRC approved the unopposed stipulation.

*PNM Rate Riders and other*

The NMPRC has approved PNM recovering fuel costs through the FPPAC, as well as rate riders for renewable energy, energy efficiency, and the TEP. These mechanisms allow for more timely recovery of investments. See Note 17.

Table of Contents

*FERC Regulation*

Rates PNM charges wholesale transmission customers are subject to traditional rate regulation by FERC. Rates charged to wholesale electric transmission customers, other than customers on the Western Spirit Line, are based on a formula rate mechanism pursuant to which rates for wholesale transmission service are calculated annually in accordance with an approved formula. The formula includes updating cost of service components, including investment in plant and operating expenses, based on information contained in PNM's annual financial report filed with FERC, as well as including projected transmission capital projects to be placed into service in the following year. The projections included are subject to true-up. Certain items, including changes to return on equity and depreciation rates, require a separate filing to be made with FERC before being included in the formula rate.

*Delivering At or Above Industry-Average Long-Term Earnings Growth*

TXNM's financial objective to deliver at or above industry-average long-term earnings growth enables investors to realize the value of their investment in the Company's business. Earnings growth is based on ongoing earnings, which is a non-GAAP financial measure that excludes from GAAP earnings certain non-recurring, infrequent, and other items that are not indicative of fundamental changes in the earnings capacity of the Company's operations. TXNM uses ongoing earnings to evaluate the operations of the Company and to establish goals, including those used for certain aspects of incentive compensation, for management and employees.

TXNM targets a dividend payout ratio in the 50% to 60% range of its ongoing earnings. The Board will continue to evaluate the dividend on an annual basis, considering sustainability and growth, capital planning, and industry standards. The Board approved the following increases in the indicated annual common stock dividend:

| Approval Date | Percent Increase |
|---|---|
| December 2024 | 5.2 % |
| December 2025 | 3.7 |

Under the terms of the Merger Agreement, TXNM has agreed not to declare, set aside, make or pay any dividend or other distribution, payable in cash, stock, property or otherwise, with respect to any of its equity securities, or make any other actual, constructive or deemed dividend or distribution in respect of any of its equity securities (except (i) TXNM may continue the declaration and payment of regular quarterly cash dividends on TXNM common stock for each quarterly period ending after the date of the Merger Agreement, in an amount not to exceed $0.4275 in 2026, with usual record and payment dates for such quarterly dividends in accordance with past dividend practice, (ii) for any cash dividend or cash distribution by a wholly-owned subsidiary of TXNM to TXNM or another wholly-owned subsidiary of TXNM, and (iii) a "stub period" dividend to holders of record of TXNM common stock as of immediately prior to the Effective Time equal to the product of (1) the number of days from the record date for payment of the last quarterly dividend paid by TXNM prior to the Effective Time, multiplied by (2) a daily dividend rate determined by dividing the amount of the last quarterly dividend paid prior to the Effective Time by ninety-one).

*Maintaining Investment Grade Credit Ratings*

The Company is committed to maintaining investment grade issuer credit ratings in order to reduce the cost of debt financing and to help ensure access to credit markets, when required. On January 15, 2024, S&P revised TXNM, PNM, and TNMP's outlook to stable from positive. See the subheading Liquidity included in the full discussion of Liquidity and Capital Resources below for the specific credit ratings for TXNM, PNM, and TNMP. All of the credit ratings issued by both Moody's and S&P on the Company's senior debt continue to be investment grade.

***Economic Factors***

*TNMP* – In 2025, TNMP experienced an increase in volumetric weather normalized retail load of 2.8% compared to 2024. Weather normalized demand-based load, excluding retail transmission consumers, increased 5.3% in 2025 compared to 2024. Data center load, including distribution and transmission, has increased 70.5% in 2025 compared to 2024.

*PNM* – In 2025, PNM experienced increases in weather normalized residential load of 0.1%, in commercial load of 1.0%, and in industrial load of 14.3% compared to 2024.

The Company is closely monitoring the impacts on the capital markets of various macroeconomic conditions, including actions by the Federal Reserve to address inflationary concerns or other market conditions, and geopolitical activity, including the potential impacts of tariffs. The Company has not experienced, nor does it expect to experience significant negative impacts to customer usage at PNM and TNMP resulting from these economic impacts. However, if current economic conditions worsen, the Company may be required to implement additional measures such as reducing or delaying operating and maintenance expenses and planned capital expenditures.

Table of Contents

**Results of Operations**

Net earnings attributable to TXNM were $151.4 million, or $1.48 per diluted share in the year ended December 31, 2025 compared to $242.2 million, or $2.67 per diluted share in 2024. Among other things, earnings in the year ended December 31, 2025, benefited from higher transmission and distribution rates at TNMP, higher volumetric and demand-based load at TNMP, impacts of revenues recorded under HB 5247 at TNMP, higher weather normalized retail load at PNM, increased revenue at PNM approved in the 2025 Rate Change and higher transmission margin at PNM. These increases were partially offset by higher operating expenses at PNM and TNMP, increased depreciation at PNM and TNMP due to increased plant in service, capacity arrangements at PNM, milder weather at PNM, and higher interest charges at PNM and TNMP. Additional information on factors impacting results of operations for each segment is discussed below under Results of Operations.

**Liquidity and Capital Resources**

As of December 31, 2025, TXNM, PNM, and TNMP had revolving credit facilities with capacities of $300.0 million, $440.0 million, and $300.0 million. Total availability for TXNM on a consolidated basis was $681.6 million at February 13, 2026. The Company utilizes these credit facilities and cash flows from operations to provide funds for both construction and operational expenditures. TXNM also has intercompany loan agreements with each of its subsidiaries. For additional details regarding the Company's revolving credit facilities, see Note 7.

TXNM projects that its consolidated capital requirements, consisting of construction expenditures and dividends, will total $11.1 billion for 2026 - 2030. These construction expenditures may change due to incremental expenditures for new customer growth and other transmission and renewable energy expansion. TNMP's investments support continued high growth in system demand across TNMP's service territories and growing encouragement for infrastructure investments from the Texas legislature to support grid reliability and resilience. PNM's capital initiatives include investments in transmission and distribution infrastructure to deliver clean energy, enhance customer satisfaction, and increase grid resilience. Construction expenditures also include investments proposed in PNM's Grid Modernization Plan and TNMP's SRP.

To fund capital spending requirements to meet growth that balances earnings goals, credit metrics and liquidity needs, the Company has entered into a number of other financing arrangements. For further discussion on these financing arrangements see Liquidity and Capital Resources discussion below as well as Note 7.

After considering the effects of these financings and the Company's short-term liquidity position as of February 13, 2026, the Company has consolidated maturities of long-term and short-term debt aggregating $657.9 million in the period from January 1, 2026 through February 27, 2027. In addition to internal cash generation, the Company anticipates that it will be necessary to obtain additional long-term financing in the form of debt refinancing, new debt issuances, and/or new equity in order to fund its capital requirements during the 2026-2030 period. The Company currently believes that its internal cash generation, existing credit arrangements, and access to public and private capital markets will provide sufficient resources to meet the Company's capital requirements for at least the next twelve months. As of December 31, 2025 and February 13, 2026, the Company was in compliance with its debt covenants.

## RESULTS OF OPERATIONS

The following discussion and analysis should be read in conjunction with the Consolidated Financial Statements and Notes thereto. Trends and contingencies of a material nature are discussed to the extent known. Also, refer to Disclosure Regarding Forward Looking Statements in Part I, Item 1 and to Risk Factors in Part I, Item 1A.

A summary of net earnings attributable to TXNM is as follows:

| | Year Ended December 31, | | Change |
|---|---|---|---|
| | 2025 | 2024 | 2025/2024 |
| | (In millions, except per share amounts) | | |
| Net earnings attributable to TXNM | $ 151.4 | $ 242.2 | $ (90.7) |
| Average diluted common and common equivalent shares | 102.4 | 90.6 | 11.8 |
| Net earnings attributable to TXNM per diluted share | $ 1.48 | $ 2.67 | $ (1.19) |

Table of Contents

The components of the changes in net earnings attributable to TXNM by segment are:

| | Change 2025/2024 |
|---|---|
| | (In millions) |
| TNMP | $ 20.8 |
| PNM | (104.6) |
| Corporate and Other | (6.9) |
| Net change | $ (90.7) |

Information regarding the factors impacting TXNM's operating results by segment are set forth below.

**Segment Information**

The following discussion is based on the segment methodology that TXNM's management uses for making operating decisions and assessing performance of its various business activities. See Note 2 for more information on TXNM's operating segments.

**TNMP**

**Non-GAAP Financial Measures**

TNMP defines utility margin as electric operating revenues less cost of energy, which consists of costs charged by third-party transmission providers. TNMP believes that utility margin provides a more meaningful basis for evaluating operations than electric operating revenues since all third-party transmission costs are passed on to consumers through a transmission cost recovery factor. Utility margin is not a financial measure required to be presented and is considered a non-GAAP measure. TNMP does not intend for utility margin to represent any financial measure as defined by GAAP however, the calculation of utility margin, as presented, most closely compares to gross margin as defined by GAAP. Reconciliations between utility margin and gross margin are presented below.

| | Year Ended December 31, | | Change |
|---|---|---|---|
| | 2025 | 2024 | 2025/2024 |
| | (In millions) | | |
| Gross margin | $ 333.1 | $ 280.1 | $ 53.0 |
| Transmission and distribution costs | 37.4 | 37.1 | 0.3 |
| Depreciation and amortization | 143.9 | 125.9 | 18.0 |
| Utility margin | $ 514.5 | $ 443.0 | $ 71.5 |

The following table summarizes the operating results for TNMP:

| | Year Ended December 31, | | Change |
|---|---|---|---|
| | 2025 | 2024 | 2025/2024 |
| | (In millions) | | |
| Electric operating revenues | $ 681.3 | $ 592.1 | $ 89.2 |
| Cost of energy | 166.8 | 149.1 | 17.7 |
| Utility margin | 514.5 | 443.0 | 71.5 |
| Operating expenses | 141.8 | 136.2 | 5.6 |
| Depreciation and amortization | 143.9 | 125.9 | 18.0 |
| Operating income | 228.7 | 180.9 | 47.8 |
| Other income (deductions) | 14.6 | 8.7 | 5.9 |
| Interest charges | (87.0) | (59.0) | (28.0) |
| Segment earnings before income taxes | 156.4 | 130.6 | 25.8 |
| Income (taxes) | (32.1) | (27.1) | (5.0) |
| Segment earnings | $ 124.3 | $ 103.5 | $ 20.8 |

Table of Contents

The following table shows total GWh sales, including the impacts of weather, by retail tariff consumer class and average number of consumers:

| | Year Ended December 31, | | Percentage Change |
|---|---|---|---|
| | 2025 | 2024 | 2025/2024 |
| Volumetric load [1] (GWh) | | | |
| Residential | 3,305.0 | 3,202.0 | 3.2 % |
| Commercial and other | 48.3 | 47.2 | 2.3 |
| Total volumetric load | 3,353.3 | 3,249.2 | 3.2 % |
| Demand-based load [2] (MW) | 37,617.5 | 31,425.1 | 19.7 % |
| Average retail consumers (thousands) [3] | 282.0 | 277.0 | 1.8 % |

[1] Volumetric load consumers are billed on KWh usage.
[2] Demand-based load includes consumers billed on a monthly KW peak and also includes retail transmission customers that are primarily billed under rate riders.
[3] TNMP provides transmission and distribution services to REPs that provide electric service to customers in TNMP's service territories. The number of consumers above represents the customers of these REPs. Under TECA, consumers in Texas have the ability to choose any REP to provide energy.

*Operating results – 2025 compared to 2024*

The following table summarizes the significant changes to gross margin:

| | Year Ended December 31, 2025 Change |
|---|---|
| *Gross margin:* | (In millions) |
| Utility Margin (see below) | $ 71.5 |
| Depreciation and amortization (see below) | (18.0) |
| Other | (0.5) |
| Net Change | $ 53.0 |

The following table summarizes the significant changes to utility margin:

| | Year Ended December 31, 2025 Change |
|---|---|
| *Utility margin:* | (In millions) |
| *Transmission rate relief/load* – Transmission cost of service rate increases in March 2024, September 2024, March 2025, and September 2025, partially offset by a decrease in ERCOT approved demand | $ 13.0 |
| *Distribution rate relief* – Distribution cost of service rate increases in July 2024, November 2024, June 2025, and December 2025 | 31.0 |
| *Volumetric-based consumer usage/load* – Weather normalized KWh sales increased 2.8%; the average number of volumetric consumers increased 1.8% | 2.5 |
| *Demand based consumer usage/load* – Weather normalized demand-based MW sales for large commercial and industrial consumers excluding retail transmission customers increased 5.3% | 5.2 |
| *Leap Year* - Decrease in revenue due to additional day in 2024 | (0.3) |
| *Weather* – Colder weather in the first and fourth quarters of 2025 was partially offset by milder weather in the second and third quarters of 2025 | 1.1 |
| Impacts of revenues recorded under HB 5247 Note 17 | 17.5 |
| Decrease in deferral of excess deferred income tax benefits refunded through base rates | (1.6) |
| *Rate riders and other* – Includes transmission cost recovery factor and energy efficiency rider which are partially offset in operating expenses | 3.1 |
| Net Change | $ 71.5 |

Table of Contents

The following tables summarize the primary drivers for operating expenses, depreciation and amortization, other income (deductions), interest charges, and income taxes:

| | Year Ended December 31, 2025 Change |
|---|---|
| *Operating expenses:* | (In millions) |
| Higher employee related and outside services expenses partially offset by lower vegetation management expenses | $ 0.8 |
| Higher property taxes due to increased utility plant in service | 2.3 |
| Higher capitalization of administrative and general expenses due to higher construction expenditures | (6.3) |
| Higher allocated depreciation and amortization from Corporate and Other | 0.9 |
| Higher insurance premiums primarily related to wildfire risk | 2.6 |
| Regulatory settlement | 3.5 |
| Costs related to the Merger | 2.2 |
| Other | (0.4) |
| Net Change | $ 5.6 |

| | Year Ended December 31, 2025 Change |
|---|---|
| *Depreciation and amortization:* | (In millions) |
| Increased utility plant in service | $ 17.9 |
| Other | 0.1 |
| Net Change | $ 18.0 |

| *Other income (deductions):* | |
|---|---|
| Lower CIAC | $ (0.7) |
| Higher equity AFUDC | 4.0 |
| Interest on Texas Sales and Use Tax refund | 2.1 |
| Other | 0.5 |
| Net Change | $ 5.9 |

| *Interest charges:* | |
|---|---|
| TNMP Merger Backstop Term Loan (Note 7) | $ (4.7) |
| Loss on reacquired debt | (9.0) |
| Interest on FMBs | (14.6) |
| Higher interest on transmission interconnection and security deposit arrangements | (0.3) |
| Lower interest on revolving short-term borrowings | 0.9 |
| Other | (0.3) |
| Net Change | $ (28.0) |

| *Income (taxes):* | |
|---|---|
| Higher segment earnings before income taxes | $ (5.4) |
| Other | 0.4 |
| Net Change | $ (5.0) |

Table of Contents

**PNM**

**Non-GAAP Financial Measures**

PNM defines utility margin as electric operating revenues less cost of energy, which consists primarily of fuel and purchase power costs. PNM believes that utility margin provides a more meaningful basis for evaluating operations than electric operating revenues since substantially all fuel and purchase power costs are offset in revenues as those costs are passed through to customers under PNM's FPPAC. Utility margin is not a financial measure required to be presented and is considered a non-GAAP measure. PNM does not intend for utility margin to represent any financial measure as defined by GAAP however, the calculation of utility margin, as presented, most closely compares to gross margin as defined by GAAP. Reconciliations between utility margin and gross margin are presented below.

| | Year Ended December 31, | | Change |
|---|---|---|---|
| | 2025 | 2024 | 2025/2024 |
| | (In millions) | | |
| Gross margin | $ 529.2 | $ 567.3 | $ (38.1) |
| Energy production costs | 98.4 | 93.7 | 4.7 |
| Transmission and distribution costs | 63.3 | 61.3 | 2.0 |
| Depreciation and amortization | 244.2 | 221.8 | 22.4 |
| Utility margin | $ 935.1 | $ 944.2 | $ (9.1) |

The following table summarizes the operating results for PNM:

| | Year Ended December 31, | | Change |
|---|---|---|---|
| | 2025 | 2024 | 2025/2024 |
| | (In millions) | | |
| Electric operating revenues | $ 1,484.3 | $ 1,379.1 | $ 105.2 |
| Cost of energy | 549.2 | 434.9 | 114.3 |
| Utility margin | 935.1 | 944.2 | (9.1) |
| Operating expenses | 458.3 | 440.4 | 17.9 |
| Depreciation and amortization | 244.2 | 221.8 | 22.4 |
| Operating income | 232.6 | 282.0 | (49.4) |
| Other income (deductions) | (2.0) | 61.5 | (63.5) |
| Interest charges | (129.5) | (106.0) | (23.5) |
| Segment earnings before income taxes | 101.1 | 237.5 | (136.4) |
| Income (taxes) benefits | 4.4 | (29.2) | 33.6 |
| Valencia non-controlling interest | (17.9) | (16.0) | (1.9) |
| Preferred stock dividend requirements | (0.5) | (0.5) | — |
| Segment earnings | $ 87.1 | $ 191.7 | $ (104.6) |

The following table shows GWh sales, including the impact of weather, by customer class and average number of customers:

| | Year Ended December 31, | | Percent Change |
|---|---|---|---|
| | 2025 | 2024 | 2025/2024 |
| | (Gigawatt hours, except customers) | | |
| Residential | 3,311.8 | 3,397.3 | (2.5)% |
| Commercial | 3,627.6 | 3,654.1 | (0.7) |
| Industrial [1] | 2,476.3 | 2,059.2 | 20.3 |
| Public authority | 219.1 | 215.6 | 1.6 |
| Economy service [2] | 410.7 | 548.4 | (25.1) |
| Other sales for resale [3] | 4,057.8 | 3,275.3 | 23.9 |
| | 14,103.3 | 13,149.9 | 7.3 % |
| Average retail customer (thousands) | 556.6 | 552.6 | 0.7 % |

(1) Includes energy provided by PNM for renewable energy resources to match the energy and capacity requirements of the Meta data center. PNM purchases renewable energy which is passed through to Meta under a rate rider. A special service rate is applied to Meta's energy consumption in those hours of the month when their consumption exceeds the energy production from the renewable resources.

(2) PNM purchases energy for a large customer on the customer's behalf and delivers the energy to the customer's location through PNM's transmission system. PNM charges the customer for the cost of the energy as a direct pass through to the customer with only a minor impact in utility margin resulting from providing ancillary services.

(3) Includes sales for resale activity resulting from PNM's participation in the EIM.

Table of Contents

*Operating results – 2025 compared to 2024*

The following table summarizes the significant changes to gross margin:

| *Gross margin:* | Year Ended December 31, 2025 Change (In millions) |
|---|---|
| Utility margin (see below) | $ (9.1) |
| Depreciation and amortization (see below) | (22.4) |
| Higher plant maintenance costs at Four Corners and gas fired plants, partially offset by lower costs at PVNGS | (4.2) |
| Higher employee related, outside services and vegetation management expenses, excluding administrative costs | (3.7) |
| Other | 1.3 |
| Net Change | $ (38.1) |

The following table summarizes the significant changes to utility margin:

| *Utility margin:* | Year Ended December 31, 2025 Change (In millions) |
|---|---|
| *Retail customer usage/load* –Weather normalized retail KWh sales increased 0.1% for residential customers, 1.0% for commercial customers, and 14.3% for industrial customers | $ 8.0 |
| *Weather* – Milder weather in 2025 | (14.0) |
| *Leap Year* - Decrease in revenue due to additional day in 2024 | (1.9) |
| *Transmission* – Increase in revenues due to higher formula rates partially offset by lower market prices and volumes and an EPE refund in 2024 | 1.4 |
| *Rate relief* – Increase in revenue approved in 2025 Rate Change | 27.7 |
| *Capacity arrangements* – Additional energy storage agreements starting in the fourth quarter of 2024 and sales agreements in 2024, partially offset with sales agreement in 2025 | (41.4) |
| *Rate riders and other* – Includes renewable energy, FPPAC, energy efficiency, energy transition charge, and transportation electrification riders which are partially offset in operating expenses, depreciation and amortization, other income (deductions), and interest charges | 11.1 |
| Net Change | $ (9.1) |

Table of Contents

The following tables summarize the primary drivers for operating expenses, depreciation and amortization, other income (deductions), interest charges, and income taxes:

| | Year Ended December 31, 2025 Change |
|---|---|
| *Operating expenses:* | (In millions) |
| Higher costs at Four Corners and gas fired plants | $ 8.5 |
| Higher property taxes associated with increased utility plant in service | 5.8 |
| Unrecoverable portion of San Juan Coal Mine reclamation remeasurement related to the capped surface mine liability (Note 16) | (10.4) |
| Unrecoverable portion of Four Corners Coal Mine reclamation remeasurement related to the capped surface mine liability (Note 16) | 0.7 |
| Higher allocated depreciation and amortization expense from Corporate and Other | 1.8 |
| Higher employee related, outside services, and vegetation management expenses | 3.2 |
| Higher capitalization of administrative and general expenses due to higher construction expenditures | (3.5) |
| Higher allocated charitable contributions from Corporate and Other related to the 2025 Rate Request | 1.5 |
| Higher insurance premiums primarily related to wildfire risk | 5.6 |
| Higher costs associated with rate riders included in utility margin | 5.1 |
| Other | (0.4) |
| Net Change | $ 17.9 |

| | |
|---|---|
| *Depreciation and amortization:* | |
| Increased utility plant in service | $ 20.0 |
| Amortization related to ETBC I Securitized Costs, offset in utility margin | 2.4 |
| Net Change | $ 22.4 |

| | |
|---|---|
| *Other income (deductions):* | |
| Increased performance on investment securities in the NDT and coal mine reclamation trusts | $ 7.9 |
| Lower interest income and higher trust expenses related to investment securities in the NDT and coal mine reclamation trust | (2.5) |
| Lower equity AFUDC | (3.3) |
| Pension settlement charge (Note 11) | (58.8) |
| Higher non-service post-retirement benefit costs | (3.1) |
| Interest related to the 2024 NTEC agreement (Note 16) | (4.3) |
| Other | 0.6 |
| Net Change | $ (63.5) |

| | |
|---|---|
| *Interest charges:* | |
| Higher interest on term loans | $ (11.9) |
| Higher interest related to remarketed PCRBs in June 2024 | (1.6) |
| Higher interest on revolving short-term borrowings | (2.3) |
| Interest on SUNs | (14.5) |
| Lower interest on transmission interconnection and security deposit arrangements | 5.0 |
| Higher debt AFUDC | 1.1 |
| Other | 0.7 |
| Net Change | $ (23.5) |

Table of Contents

| | Year Ended December 31, 2025 Change |
|---|---|
| *Income (taxes):* | (In millions) |
| Lower segment earnings before income taxes | $ 35.1 |
| Higher amortization of federal excess deferred income taxes | 2.2 |
| Impacts of lower equity AFUDC | (0.8) |
| Lower tax credits | (2.4) |
| Other | (0.5) |
| Net Change | $ 33.6 |

**Corporate and Other**

The table below summarizes the operating results for Corporate and Other:

| | Year Ended December 31, | | Change |
|---|---|---|---|
| | 2025 | 2024 | 2025/2024 |
| | (In millions) | | |
| Total revenues | $ — | $ — | $ — |
| Cost of energy | — | — | — |
| Utility margin | — | — | — |
| Operating expenses | (17.4) | (27.8) | 10.4 |
| Depreciation and amortization | 37.5 | 37.2 | 0.3 |
| Operating income (loss) | (20.1) | (9.4) | (10.7) |
| Other income (deductions) | (2.2) | (15.4) | 13.2 |
| Interest charges | (55.1) | (63.1) | 8.0 |
| Segment earnings (loss) before income taxes | (77.5) | (87.9) | 10.4 |
| Income (taxes) benefits | 17.5 | 34.8 | (17.3) |
| Segment earnings (loss) | $ (60.0) | $ (53.1) | $ (6.9) |

Corporate and Other operating expenses shown above are net of amounts allocated to PNM and TNMP under shared services agreements. The amounts allocated include certain expenses shown as depreciation and amortization and other income (deductions) in the table above. The change in operating expenses includes an increase of $15.4 million in costs related to the Merger that were not allocated to PNM or TNMP. Substantially all depreciation and amortization expense are offset in operating expenses as a result of allocation of these costs to other business segments.

*Operating results – 2025 compared to 2024*

The following tables summarize the primary drivers for other income (deductions), interest charges, and income taxes:

| | Year Ended December 31, 2025 Change |
|---|---|
| *Other income (deductions):* | (In millions) |
| Sale of NMRD equity method investment in 2024 | $ 15.1 |
| Higher charitable contributions allocated to PNM | (2.0) |
| Other | 0.1 |
| Net Change | $ 13.2 |

| | |
|---|---|
| *Interest charges:* | |
| Issuance of $550.0 million Convertible Notes in 2024 | $ (14.1) |
| Issuance of $350.0 million TXNM 2025 Junior Subs | (1.4) |
| Lower interest on short-term borrowings | 2.0 |
| Lower interest on term loans | 21.2 |
| Other | 0.3 |
| Net Change | $ 8.0 |

Table of Contents

| | Year Ended December 31, 2025 Change |
|---|---|
| *Income (taxes) benefits:* | (In millions) |
| Lower segment loss before income taxes | $ (2.6) |
| Investment tax credits related to the sale of NMRD in 2024 | (15.7) |
| Other | 1.0 |
| Net Change | $ (17.3) |

## LIQUIDITY AND CAPITAL RESOURCES

**Statements of Cash Flows**

The information concerning TXNM's cash flows is summarized as follows:

| | Year Ended December 31, | | Change |
|---|---|---|---|
| | 2025 | 2024 | 2025/2024 |
| Net cash flows from: | (In millions) | | |
| Operating activities | $ 584.5 | $ 508.2 | $ 76.3 |
| Investing activities | (1,217.1) | (1,174.4) | (42.7) |
| Financing activities | 642.5 | 684.4 | (41.9) |
| Net change in cash and cash equivalents | $ 9.9 | $ 18.1 | $ (8.3) |

*Cash Flows from Operating Activities*

Changes in TXNM's cash flow from operating activities result from net earnings, adjusted for items impacting earnings that do not provide or use cash. See Results of Operations above. Certain changes in assets and liabilities resulting from normal operations, including the effects of the seasonal nature of the Company's operations, also impact operating cash flows.

*Cash Flows from Investing Activities*

The changes in TXNM's cash flows from investing activities relate primarily to changes in utility plant additions. Cash flows from investing activities include purchases and sales of investment securities in the NDT, SJGS decommissioning trust, and coal mine reclamation trusts as well as the sale of NMRD on February 27, 2024.

Major components of TXNM's cash inflows and (outflows) from investing activities are shown below:

| | Year Ended December 31, | | Change |
|---|---|---|---|
| | 2025 | 2024 | 2025/2024 |
| **Cash (Outflows) for Utility Plant Additions** | (In millions) | | |
| PNM: | | | |
| Generation | $ (163.1) | $ (126.4) | $ (36.7) |
| Renewables | — | (0.2) | 0.2 |
| Transmission and distribution | (403.0) | (538.8) | 135.8 |
| Nuclear fuel | (19.1) | (17.0) | (2.1) |
| | (585.2) | (682.4) | 97.2 |
| TNMP: | | | |
| Transmission | (251.9) | (161.2) | (90.7) |
| Distribution | (311.2) | (380.4) | 69.2 |
| | (563.1) | (541.6) | (21.5) |
| Corporate and Other: | | | |
| Computer hardware and software | (41.0) | (20.7) | (20.3) |
| General services, building, and other | (6.6) | (2.3) | (4.3) |
| | $ (1,195.9) | $ (1,247.0) | $ 51.1 |
| **Other Cash Flows from Investing Activities** | | | |
| Proceeds from sale of plant assets (Note 8) | $ — | $ 2.8 | $ (2.8) |
| Proceeds from sales of investment securities | 693.3 | 707.4 | (14.1) |
| Purchases of investment securities | (714.4) | (756.8) | 42.4 |
| Proceeds from sale of NMRD | — | 116.9 | (116.9) |
| Investments in NMRD | — | (12.6) | 12.6 |
| Other, net | (0.1) | 14.9 | (15.0) |
| | $ (21.2) | $ 72.6 | $ (93.8) |
| Net cash flows from investing activities | $ (1,217.1) | $ (1,174.4) | $ (42.7) |

Table of Contents

*Cash Flow from Financing Activities*

The changes in TXNM's cash flows from financing activities include:

- Short-term borrowings decreased $427.9 million in 2025 compared to an increase of $347.4 million in 2024, resulting in a net decrease in cash flows from financing activities of $775.3 million in 2024
- In 2025, TNMP issued $140.0 million aggregate principal amount of TNMP February 2025 Bonds and used the proceeds to repay borrowings under the TNMP Revolving Credit Facility, to fund capital expenditures, and for other corporate purposes
- In 2025, TNMP offered to prepay an aggregate $1,505.0 million of outstanding TNMP FMBs as a result of the signing of the Merger Agreement. TNMP drew $1,084.3 million on the TNMP Merger Backstop Term Loan to fund the prepayment of the validly-tendered bonds
- In 2025, TNMP issued the TNMP July 2025 FMBs to institutional investors and used the proceeds to repay the $1,084.3 million drawn under the TNMP Merger Backstop Term Loan
- In 2025, TNMP issued $70.0 million aggregate principal amount of TNMP November 2025 Bonds and used the proceeds to repay borrowings under the TNMP Revolving Credit Facility, to fund capital expenditures, and for other corporate purposes
- In 2025, PNM entered into the PNM 2025 Term Loan for $195.0 million and used the proceeds to repay borrowings under the PNM Revolving Credit Facility, the PNM New Mexico Credit Facility, and for other corporate purposes
- In 2025, PNM issued $300.0 million aggregate principal amount of PNM April 2025 SUNs and used the proceeds to repay existing indebtedness, including the $104.0 million of SUNs that were due in May 2025, to fund capital expenditures, and for other corporate purposes
- In 2025, PNM issued $350.0 million aggregate principal amount of PNM July 2025 SUNs and used the proceeds to repay existing indebtedness, including the $250.0 million of SUNs that were due in August 2025, and for other corporate purposes
- In 2025, PNM entered into the PNM November 2025 Term Loan for $120.0 million and used the proceeds to partially repay existing indebtedness due under the PNM 2024 Term Loan
- In 2025, TXNM physically settled all remaining shares under the TXNM 2024 ATM Program by issuing 1.1 million shares of TXNM common stock aggregating net proceeds of $49.6 million that were used to repay borrowings under the TXNM Revolving Credit Facility
- In 2025, TXNM repaid $51.0 million in borrowings under the TXNM 2021 Delayed Draw Term Loan
- In 2025, TXNM sold 8,000,000 shares of TXNM common stock in a private placement transaction aggregating $400.0 million and used the proceeds to make cash equity contributions to TNMP, to repay borrowings under the TXNM Revolving Credit Facility, and for other corporate purposes
- In 2025, TXNM sold 3,615,003 shares of TXNM common stock in a private placement transaction aggregating $200.0 million and used the proceeds to repay an equal amount of the TXNM 2023 Term Loan
- In 2025, TXNM issued 3,542,377 shares of TXNM common stock sold under the TXNM 2025 ATM Program, aggregating net proceeds of $198.0 million that was used to repay borrowings under the TXNM Revolving Credit Facility and for other corporate purposes
- In 2025, TXNM repaid the remaining $210.0 million in borrowings under the TXNM 2023 Term Loan
- In 2025, TXNM issued $350.0 million in TXNM 2025 Junior Subs and used the proceeds to fund the cash equity contribution to PNM of $123.3 million, to repay borrowings under the TXNM Revolving Credit Facility, and for other corporate purposes

**Financing Activities**

See Note 7 for additional information concerning the Company's financing activities. PNM must obtain NMPRC approval for any financing transaction having a maturity of more than 18 months. In addition, PNM files its annual informational financing filing and short-term financing plan with the NMPRC. The Company's ability to access the credit and capital markets at a reasonable cost is largely dependent upon its:

- Ability to earn a fair return on equity
- Results of operations
- Ability to obtain required regulatory approvals
- Conditions in the financial markets
- Credit ratings

The Company is closely monitoring the impacts on the capital markets of other macroeconomic conditions, including actions by the Federal Reserve to address inflationary concerns or other market conditions, and geopolitical activity. The Company currently believes it has adequate liquidity but cannot predict the effects of any of these macroeconomic conditions on the global, national, or local economy, including the Company's ability to access capital in the financial markets, or on the Company's financial position, results of operations, and cash flows.

Table of Contents

Each of the Company's revolving credit facilities and term loans contain a single financial covenant that requires the maintenance of a debt-to-capitalization ratio. For the TXNM agreements, this ratio must be maintained at less than or equal to 70%, and for the PNM and TNMP agreements, this ratio must be maintained at less than or equal to 65%. The Company's revolving credit facilities, term loans, and other debt agreements generally also contain customary covenants, events of default, cross-default provisions, and change-of-control provisions. The Company is in compliance with its debt covenants.

On January 21, 2025, PNM entered into the $195.0 million PNM 2025 Term Loan. PNM used the proceeds of the PNM 2025 Term Loan to repay borrowings under the PNM Revolving Credit Facility, the PNM New Mexico Credit Facility, and for general corporate purposes. The PNM 2025 Term Loan bears interest at a variable rate, which was 4.73% at December 31, 2025, and must be repaid on or before July 21, 2026.

On February 14, 2025, TNMP entered into the TNMP February 2025 Bond Purchase Agreement with institutional investors for the sale of $140.0 million aggregate principal amount of its 5.19% TNMP February 2025 Bonds offered in private placement transactions. On February 14, 2025, TNMP issued all $140.0 million of the TNMP February 2025 Bonds, due April 1, 2031. The proceeds were used to repay borrowings under the TNMP Revolving Credit Facility, for funding of capital expenditures, and for other corporate purposes.

On April 23, 2025, PNM entered into the PNM April 2025 Note Purchase Agreement with institutional investors for the sale and issuance of $300.0 million aggregate principal amount of two series of the PNM April 2025 SUNs, offered in private placement transactions. On April 23, 2025, PNM issued $125.0 million of the PNM April 2025 SUNs at 5.75%, due June 1, 2032, and $175.0 million of the PNM April 2025 SUNs at 6.13%, due June 1, 2037. Proceeds from the PNM April 2025 SUNs were used for the repayment of existing indebtedness, funding of capital expenditures, and other corporate purposes.

On May 16, 2025, TXNM paid the $51.0 million remaining balance due under its TXNM 2021 Delayed Draw Term Loan in accordance with its terms.

In May 2024, TXNM entered into the TXNM 2024 ATM Program pursuant to which TXNM may sell, from time to time, up to an aggregate amount of $100.0 million of its common stock. In August 2024, subsequent to approval by shareholders to increase TXNM's authorized shares, the Company increased the aggregate sales amount from $100.0 million to $300.0 million of its common stock, no par value, that may be sold under the TXNM 2024 ATM Program. Throughout 2024, TXNM entered into forward sale agreements with forward purchasers, for the sale of 3,563,592 shares of TXNM common stock. TXNM did not receive any proceeds upon the execution of this agreement and, except in certain specified circumstances, has the option to elect physical, cash, or net share settlement of the forward sale agreement on or before a date that is 12 months from the agreement effective dates. On December 30, 2024, TXNM physically settled forward purchases under the TXNM 2024 ATM Program for 2,458,951 shares, receiving $98.6 million in cash proceeds, and used those proceeds to repay borrowings under the TXNM Revolving Credit Facility. On May 27, 2025, TXNM physically settled all remaining shares under the TXNM 2024 ATM Program by issuing 1,104,641 shares, receiving $49.6 million in cash proceeds, and used those proceeds to repay borrowings under the TXNM Revolving Credit Facility. Following this settlement, no additional shares of TXNM's common stock remain subject to future settlement under the TXNM 2024 ATM Program.

On May 18, 2025, the execution of the Merger Agreement constituted a "Change of Control" under certain TXNM and TNMP debt agreements. Under each of the specified debt agreements, a "Change of Control" constitutes an "Event of Default," pursuant to which the lender parties thereto had the right to accelerate the indebtedness under the debt agreements. On December 19, 2025, in connection with exercising the available extension options (see Note 7), TXNM and TNMP entered into additional amendments in connection with the TXNM Revolving Credit Facility and the TNMP Revolving Credit Facility to amend the definition of Change of Control to not include the closing of the Merger. The definitions of Change of Control under the PNM debt agreements and PNM note purchase agreements will not be triggered by the closing of the Merger.

On May 18, 2025, TXNM entered into the May 2025 Stock Purchase Agreement, whereby TXNM sold, in a private placement transaction, 8,000,000 shares of TXNM common stock for a purchase price of $50.00 per share (aggregating $400.0 million). The consummation of the May 2025 Stock Purchase Agreement occurred on June 2, 2025. TXNM used the proceeds to make cash equity contributions to TNMP, to repay borrowings under the TXNM Revolving Credit Facility, and for general corporate purposes.

To ensure sufficient liquidity pending the Lender Consents (Note 7), on May 18, 2025, TXNM entered into the $910.0 million 364-day TXNM Merger Backstop Revolving Facility to provide liquidity in the event TXNM was unable to obtain the Lender Consents. On May 19, 2025, TXNM borrowed approximately $4 million under the TXNM Merger Backstop Revolving Facility and subsequently repaid the entire balance by May 21, 2025. The TXNM Merger Backstop Revolving Facility expired according to its terms as TXNM did not make any additional borrowings thereunder by the commitment termination date of May 23, 2025, and TXNM was able to obtain the necessary Lender Consents.

On May 18, 2025, concurrent with the execution of the TXNM Merger Backstop Revolving Facility, TNMP entered into the $1,505.0 million, 364-day TNMP Merger Backstop Term Loan to provide liquidity to repurchase TNMP's FMBs that were tendered for prepayment pursuant to the Offer (defined below). Borrowings under the TNMP Merger Backstop Term

Table of Contents

Loan were short-term in nature and bore interest at a variable rate. As discussed below, on July 21, 2025, TNMP issued the TNMP July 2025 FMBs and used the proceeds to repay the outstanding principal balance under the TNMP Merger Backstop Term Loan on July 22, 2025, terminating that agreement.

The documents governing an aggregate $1,505.0 million of TNMP's outstanding FMBs ("TNMP FMBs") obligated TNMP to offer (the "Offer"), within 30 business days following the signing of the Merger Agreement, to prepay all outstanding TNMP FMBs at 100% of the principal amount, plus accrued and unpaid interest thereon, but without any make-whole amount or other premium. On June 14, 2025, the Offer expired and $1,084.3 million in aggregate principal amount of the bonds were validly tendered. On June 24, 2025, holders whose bonds were validly tendered and accepted for purchase received 100% of the aggregate principal amount of bonds prepaid plus accrued and unpaid interest using funds drawn under the TNMP Merger Backstop Term Loan. On November 6, 2025, TNMP entered into an agreement and supplemental indenture to amend the documents governing $417.7 million of TNMP FMBs. The supplemental indenture amends the requirement for TNMP to provide certain financial reports and amends the definition of change of control such that TNMP will no longer be required to make an offer to prepay the aggregate $417.7 million TNMP FMBs upon closing of the Merger.

The documents governing an aggregate $3.0 million of TNMP FMBs still require TNMP to make another offer, within 30 business days of closing of the Merger, to prepay all those $3.0 million remaining outstanding TNMP FMBs at par. TNMP will make such offer to prepay the TNMP FMBs in accordance with the terms of the TNMP FMBs; however, holders of the TNMP FMBs are not required to tender their TNMP FMBs and may accept or reject such offer to prepay.

The information in this Form 10-K is for informational purposes only and is neither an offer to purchase, nor a solicitation of an offer to sell, subscribe for or buy any securities in any jurisdiction pursuant to the proposed transactions or otherwise, nor shall there be any sale, issuance or transfer of securities in any jurisdiction in contravention of applicable law. Similar to the offer to prepay made after signing the Merger Agreement, the post-Merger closing offer to prepay the TNMP FMBs will be made only pursuant to an offer to prepay, which will set forth the terms and conditions of the offer to prepay.

On June 24, 2025, TXNM entered into the June 2025 Stock Purchase Agreement whereby TXNM sold, and the purchasers named therein agreed to purchase 3,615,003 shares of TXNM common stock for a purchase price of $55.325 per share (for an aggregate amount of approximately $200 million). The closing of the issuance occurred on June 27, 2025. TXNM used the proceeds to repay an equal amount due under the TXNM 2023 Term Loan. TXNM granted the purchasers customary registration rights with respect to the shares, pursuant to which TXNM was required to register such shares for resale with the SEC. On August 8, 2025, TXNM registered the shares for resale.

On July 21, 2025, TNMP entered into the TNMP July 2025 Bond Purchase Agreement with institutional investors for the sale of $1,084.3 million aggregate principal amount of six series of TNMP July 2025 FMBs offered in private placement transactions. On July 21, 2025, TNMP issued all $1,084.3 million of the TNMP July 2025 FMBs and the proceeds were used to repay borrowings under the TNMP Merger Backstop Term Loan. See Note 7 for the terms of the TNMP July 2025 FMBs.

On July 31, 2025, PNM entered into the PNM July 2025 Note Purchase Agreement with institutional investors for the sale and issuance of $350.0 million aggregate principal amount of two series of the PNM July 2025 SUNs offered in private placement transactions. On July 31, 2025, PNM issued $200.0 million of the PNM July 2025 SUNs at 5.47%, due July 31, 2031, and $150.0 million at 6.03%, due July 31, 2036. PNM used the proceeds from the PNM July 2025 SUNs to repay the PNM $250.0 million SUNs and for other corporate purposes.

On August 15, 2025, TXNM entered into a distribution agreement (the "Distribution Agreement") pursuant to which the Company may sell, from time to time, up to an aggregate sales price of $200.0 million of its common stock, no par value, through the sales agents (the "TXNM 2025 ATM Program"). Sales of the shares made pursuant to the Distribution Agreement, if any, may be made in "at the market offerings" as defined in Rule 415 of the Securities Act. TXNM did not initially receive any proceeds upon the execution of this agreement. Beginning on August 15, 2025, TXNM, pursuant to the TXNM 2025 ATM Program, sold an aggregate of 3,542,377 shares of TXNM common stock under the Distribution Agreement for net cash proceeds of $198.0 million. TXNM used the proceeds to repay borrowings under the TXNM Revolving Credit Facility and for other corporate purposes.

On August 29, 2025, TXNM paid the $210.0 million remaining balance due under its TXNM 2023 Term Loan in accordance with its terms, which terminated the agreement.

On November 10, 2025, PNM entered into the $120.0 million PNM November 2025 Term Loan. PNM used the proceeds of the PNM November 2025 Term Loan to repay a portion of the borrowings outstanding under the PNM 2024 Term Loan. The PNM November 2025 Term Loan bears interest at a variable rate, which was 4.67% at December 31, 2025, and must be repaid on or before May 10, 2027.

On November 18, 2025, TNMP entered into the TNMP November 2025 Bond Purchase Agreement with institutional investors for the sale of $70.0 million aggregate principal amount of its 4.69% TNMP November 2025 FMBs offered in private placement transactions. On December 18, 2025, TNMP issued all $70.0 million TNMP November 2025 FMBs at a 4.69%

Table of Contents

interest rate, due December 18, 2031. The proceeds were used to repay borrowings under the TNMP Revolving Credit Facility and for other corporate purposes.

On December 10, 2025, TXNM issued $350.0 million aggregate principal amount of its TXNM 2025 Junior Subs. The TXNM 2025 Junior Subs rank equally in right of payment to the $550.0 million 5.75% Convertible Notes. The TXNM 2025 Junior Subs bear interest at a rate of 7.000% per year, payable semi-annually in arrears on January 31 and July 31 (subject to TXNM's right to defer interest payments) and mature on July 31, 2056, unless earlier redeemed in accordance with their terms. Proceeds from the TXNM 2025 Junior Subs were used to fund the cash equity contribution to PNM of $123.3 million, to repay borrowings under the TXNM Revolving Credit Facility, and for other corporate purposes. See Note 7 for details related to the interest rate reset and redemption options.

**Capital Requirements**

TXNM's total capital requirements consist of construction expenditures, cash dividend requirements for TXNM common stock and PNM preferred stock.

Key activities in TXNM's current construction program include:

- Investments in transmission and distribution infrastructure
- Upgrading generation resources and delivering clean energy
- Purchasing nuclear fuel

Projected capital requirements for 2026-2030 are:

| | 2026 | 2027-2030 | Total |
|---|---|---|---|
| | | (In millions) | |
| Construction expenditures | $ 1,566.9 | $ 8,647.9 | $ 10,214.8 |
| Dividends on TXNM common stock | 184.1 | 736.3 | 920.4 |
| Dividends on PNM preferred stock | 0.5 | 2.1 | 2.6 |
| Total capital requirements | $ 1,751.5 | $ 9,386.3 | $ 11,137.8 |

The construction expenditure estimates are under continuing review and subject to ongoing adjustment, as well as to Board review and approval. The construction expenditures above include TNMP's investments to support continued high growth in system demand across TNMP's service territories and growing encouragement for infrastructure investments from the Texas legislature to support grid reliability and resilience. PNM's capital initiative that includes investments in transmission and distribution infrastructure to deliver clean energy, enhance customer satisfaction, and increase grid resilience. Construction expenditures also include investments included in PNM's Grid Modernization Plan and TNMP's SRP. These investments provide for a more resilient, reliable, efficient, and decarbonized electric system. Construction expenditures included in the table above may change due to incremental expenditures for new customer growth in New Mexico and Texas, and other transmission and renewable energy expansion in New Mexico. The ability of TXNM to pay dividends on its common stock is dependent upon the ability of PNM and TNMP to pay dividends to TXNM. See Note 6 for a discussion of regulatory and contractual restrictions on the payment of dividends by PNM and TNMP.

During the year ended December 31, 2025, TXNM met its capital requirements and construction expenditures through cash generated from operations, as well as its liquidity arrangements and the borrowings discussed in Financing Activities above.

In addition to the capital requirements for construction expenditures and dividends, the Company has long-term debt and term loans that must be paid or refinanced at maturity. PNM has $3.6 million and $3.7 million in scheduled principal payments due for the ETBC I Securitized Bonds in February and August 2026. PNM also has $195.0 million under the PNM 2025 Term Loan due in July 2026 and $100.3 million of 0.875% PCRBs with a mandatory tender date of October 1, 2026. See Note 7 for additional information about the Company's long-term debt and equity arrangements. The Company may also enter into new arrangements similar to the existing agreements, borrow under the revolving credit facilities, issue new long-term debt or equity in the public or private capital markets, or a combination of these sources. The Company has from time to time refinanced or repurchased portions of its outstanding debt before scheduled maturity. Depending on market conditions, the Company may refinance other debt issuances or make additional debt repurchases in the future.

**Other Material Cash Requirements**

In addition to the cash requirements for construction requirements and long-term debt discussed above, the Company has other material cash requirements related to long-term contractual obligations including minimum lease payments (Note 8), coal contracts, coal mine reclamation, nuclear decommissioning, SJGS plant decommissioning (Note 16), and pension and retiree medical contributions (Note 11).

Table of Contents

*Interest on long-term debt, excluding ETBC I Securitized Bonds*

Interest accrues on long-term debt agreements, at fixed rates, with the passage of time, and is typically paid semi-annually in accordance with the terms of the debt agreement. Provided that these long-term debt agreements are not prepaid or refinanced before their expected maturities, payments of interest are expected to total $238.1 million in 2026, $469.6 million in 2027 and 2028, $433.4 million in 2029 and 2030, and $2.4 billion in 2031 and thereafter.

*Scheduled payments on ETBC I Securitized Bonds*

The ETBC I Securitized Bonds are subject to fixed, scheduled, principal and interest payment arrangements that are paid semi-annually in accordance with the terms of the agreement and are funded by the energy transition charge billed to customers. See Note 16. Principal payments are expected to total $7.3 million for 2026, $15.9 million for 2027 and 2028, $17.8 million for 2029 and 2030, and $292.8 million for 2031 and thereafter. Interest payments are expected to total $19.4 million for 2026, $37.5 million for 2027 and 2028, $35.6 million for 2029 and 2030, and $187.4 million for 2031 and thereafter.

*Transmission service arrangements*

PNM owns transmission lines that are interconnected with other utilities in Arizona and Texas. PNM has executed long-term contracts with these other utilities to receive service for the transmission of energy owned by PNM utilizing the third-party transmission facilities. PNM generally receives transmission services, which are regulated by FERC, from a third-party through the other utilities' OATT or a specific contract. PNM has reserved firm capacity on a long-term basis and is committed under the terms of the contracts. These contracted obligations total $17.3 million in 2026, $16.5 million in 2027, $11.4 million in 2028 and, $3.7 million in 2029.

*Technology outsourcing*

The Company has other technology services under long-term contracts. The obligations under these contracts total $8.2 million for 2026 and $15.6 million for 2027 and 2028.

**Liquidity**

TXNM's liquidity arrangements include the $300.0 million TXNM Revolving Credit Facility, the $400.0 million PNM Revolving Credit Facility, and the $300.0 million TNMP Revolving Credit Facility. Each of these facilities had an original maturity date of March 30, 2029, and contained two one-year extension options that, if exercised, would extend the maturity to March 2031, subject to approval by a majority of the lenders. On December 19, 2025, TNMP amended the TNMP Revolving Credit Facility to increase the capacity from $200.0 million to $300.0 million, secured by $300.0 million aggregate principal amount of TNMP first mortgage bonds and exercised the first of two one-year extension options, extending the maturities for each of the facilities to March 29, 2030. One lender in each of the revolving credit facilities failed to agree to the extension and as a result, effective March 30, 2029, the TXNM Revolving Credit Facility capacity will adjust to $265.4 million, the PNM Revolving Credit Facility capacity will adjust to $354.1 million, and the TNMP Revolving Credit Facility capacity will adjust to $277.0 million. PNM also has the $40.0 million PNM New Mexico Credit Facility. On July 25, 2025, PNM amended its PNM New Mexico Credit Facility to, among other things, extend the maturity from May 20, 2026 to May 31, 2030. Variable interest rates under the TXNM, PNM, and TNMP revolving credit facilities, including the PNM New Mexico Credit Facility, are based on SOFR. The Company believes the terms and conditions of these facilities are consistent with those of other investment grade revolving credit facilities in the utility industry. The Company expects that it will be able to extend or replace these credit facilities under similar terms and conditions prior to their expirations.

The revolving credit facilities and the PNM New Mexico Credit Facility provide short-term borrowing capacity. The revolving credit facilities also allow letters of credit to be issued. Letters of credit reduce the available capacity under the facilities. The Company utilizes these credit facilities and cash flows from operations to provide funds for both construction and operational expenditures. The Company's business is seasonal with more revenues and cash flows from operations being generated in the summer months. In general, the Company relies on the credit facilities to be the initial funding source for construction expenditures. Accordingly, borrowings under the facilities may increase over time. Depending on market and other conditions, the Company will periodically sell long-term debt and use the proceeds to reduce the borrowings under the credit facilities. Information regarding the range of borrowings for each facility is as follows:

| | Three Months Ended December 31, 2025 | | Year Ended December 31 | | | |
|---|---|---|---|---|---|---|
| | | | 2025 | | 2024 | |
| Range of Borrowings | Low | High | Low | High | Low | High |
| | | | (In millions) | | | |
| PNM: | | | | | | |
| PNM Revolving Credit Facility | $ 105.6 | $ 246.8 | $ — | $ 325.2 | $ — | $ 323.8 |
| PNM New Mexico Credit Facility | 40.0 | 40.0 | 20.0 | 40.0 | — | 40.0 |
| TNMP Revolving Credit Facility | — | 45.0 | — | 200.0 | 11.2 | 158.3 |
| TXNM Revolving Credit Facility | — | 216.1 | — | 258.0 | 31.1 | 234.7 |

Table of Contents

At December 31, 2025, the weighted average interest rates were 5.04% for the PNM Revolving Credit Facility, 5.08% for the PNM New Mexico Credit Facility, and 5.16% for the TXNM Revolving Credit Facility. There were no borrowings outstanding under the TNMP Revolving Credit Facility at December 31, 2025.

The Company currently believes that its capital requirements for at least the next twelve months can be met through internal cash generation, existing, extended, or new credit arrangements, and access to public and private capital markets as discussed above and in Note 7. The Company anticipates that it will be necessary to obtain additional long-term financing to fund its capital requirements and to balance its capital structure during the 2026 – 2030 period. This could include new debt and/or equity issuances. To cover the difference in the amounts and timing of internal cash generation and cash requirements, the Company intends to use short-term borrowings under its current and future liquidity arrangements or other short-term loans. Market conditions, such as rising interest rates, may raise the cost of borrowing under the Company's current and future liquidity arrangements or other variable debt. In addition, if market conditions worsen, the Company may not be able to access the capital markets or renew credit facilities when they expire. Should that occur, the Company would seek to improve cash flows by reducing capital expenditures and exploring other available alternatives.

Currently, all of the credit ratings issued by both Moody's and S&P on the Company's senior debt are investment grade. As of December 31, 2025, Moody's and S&P's outlook is stable for all entities. In its May 2025 credit opinion, S&P commented that they view the proposed Merger as credit supportive. In its June 2025 credit opinion, Moody's commented that the announced terms of the proposed Merger are not expected to adversely affect the ratings or outlooks of TXNM or its two utility subsidiaries. Investors are cautioned that a security rating is not a recommendation to buy, sell, or hold securities, that each rating is subject to revision or withdrawal at any time by the rating organization, and that each rating should be evaluated independently of any other rating.

As of February 13, 2026, ratings on the Company's securities were as follows:

| | TXNM | PNM | TNMP |
|---|---|---|---|
| S&P | | | |
| Issuer rating | BBB | BBB | BBB+ |
| Senior secured debt | * | * | A |
| Senior unsecured debt | BBB- | BBB | * |
| Junior subordinated debt | BB+ | * | * |
| Preferred stock | * | BB+ | * |
| Moody's | | | |
| Issuer rating | Baa3 | Baa2 | Baa1 |
| Senior secured debt | * | * | A2 |
| Senior unsecured debt | Baa3 | Baa2 | * |
| Junior subordinated debt | Ba1 | * | * |
| * Not applicable | | | |

A summary of liquidity arrangements as of February 13, 2026, is as follows:

| | PNM | TNMP | TXNM Separate | TXNM Consolidated |
|---|---|---|---|---|
| | | (In millions) | | |
| Financing capacity: | | | | |
| Revolving Credit Facility | $ 400.0 | $ 300.0 | $ 300.0 | $ 1,000.0 |
| PNM New Mexico Credit Facility | 40.0 | — | — | 40.0 |
| Total financing capacity | $ 440.0 | $ 300.0 | $ 300.0 | $ 1,040.0 |
| Amounts outstanding as of February 13, 2026: | | | | |
| Revolving Credit Facility | $ 209.1 | $ 49.7 | $ 56.5 | $ 315.3 |
| PNM New Mexico Credit Facility | 40.0 | — | — | 40.0 |
| Letters of credit | — | — | 3.1 | 3.1 |
| Total short-term debt and letters of credit | 249.1 | 49.7 | 59.6 | 358.4 |
| Remaining availability as of February 13, 2026 | $ 190.9 | $ 250.3 | $ 240.4 | $ 681.6 |
| Invested cash as of February 13, 2026 | $ — | $ 1.0 | $ — | $ 1.0 |

In addition to the above, TXNM has $19.3 million of letters of credit outstanding under the WFB LOC Facility. The above table excludes intercompany debt. As of February 13, 2026, neither PNM nor TNMP had any intercompany borrowings outstanding from TXNM. As of February 13, 2026, PNMR Development had $16.0 million in intercompany borrowings outstanding from TXNM. The remaining availability under the revolving credit facilities at any point in time varies based on a number of factors, including the timing of collections of accounts receivables and payments for construction and operating expenditures.

Table of Contents

TXNM has an automatic shelf registration that provides for the issuance of various types of debt and equity securities that expires February 2028.

**Off-Balance Sheet Arrangements**

TXNM has no off-balance sheet arrangements that have or are reasonably likely to have a current or future effect on its financial condition, changes in financial condition, revenues or expenses, results of operations, liquidity, capital expenditures or capital resources that are material to investors.

**Contingent Provisions of Certain Obligations**

TXNM, PNM, and TNMP have a number of debt obligations and other contractual commitments that contain contingent provisions. Some of these, if triggered, could affect the liquidity of the Company. In the unlikely event that the contingent requirements were to be triggered, TXNM, PNM, or TNMP could be required to provide security, immediately pay outstanding obligations, or be prevented from drawing on unused capacity under certain credit agreements. The most significant consequences resulting from these contingent requirements are detailed in the discussion below.

The TXNM Revolving Credit Facility, PNM Revolving Credit Facility, PNM New Mexico Credit Facility, and the TNMP Revolving Credit Facility contain "ratings triggers," for pricing purposes only. If TXNM, PNM, or TNMP is downgraded or upgraded by the ratings agencies, the result would be an increase or decrease in interest cost. The TXNM facility requires that TXNM is to maintain a debt-to-capitalization ratio of less than or equal to 70%. The debt-to-capitalization ratio requirement remains at less than or equal to 65% for the PNM and TNMP facilities. If these ratios were exceeded, the entity could be required to repay all borrowings under its facility, be prevented from borrowing on the unused capacity under the facility and be required to provide collateral for all outstanding letters of credit issued under the facility.

PNM's standard purchase agreement for the procurement of natural gas for its fuel needs contains a contingent requirement that could require PNM to provide collateral for its gas purchase obligations if the seller were to reasonably believe that PNM was unable to fulfill its payment obligations under the agreement.

The master agreement for the sale of electricity in the WSPP contains a contingent requirement that could require PNM to provide collateral if the credit ratings on its debt falls below investment grade. The WSPP agreement also contains a contingent requirement, commonly called a "material adverse change" provision, which could require PNM to provide collateral if a material adverse change in its financial condition or operations were to occur. Additionally, PNM utilizes standard derivative contracts to financially hedge and trade energy. These agreements contain contingent requirements that require PNM to provide security if the credit rating on its debt falls below investment grade. The Company believes its financing arrangements are sufficient to meet the requirements of the contingent provisions. No conditions have occurred that would result in any of the above contingent provisions being implemented.

**Capital Structure**

The capitalization tables below include the current maturities of long-term debt, but do not include short-term debt and do not include operating lease obligations as debt.

| | December 31, | |
|---|---|---|
| **TXNM** | **2025** | **2024** |
| TXNM common equity | 38.5 % | 33.9 % |
| Preferred stock of subsidiary | 0.2 | 0.2 |
| Long-term debt [1] | 61.3 | 65.9 |
| Total capitalization | 100.0 % | 100.0 % |
| **PNM** | | |
| PNM common equity | 45.5 % | 46.4 % |
| Preferred stock | 0.2 | 0.2 |
| Long-term debt | 54.3 | 53.4 |
| Total capitalization | 100.0 % | 100.0 % |
| **TNMP** | | |
| Common equity | 51.0 % | 48.3 % |
| Long-term debt | 49.0 | 51.7 |
| Total capitalization | 100.0 % | 100.0 % |

[1] TXNM's long-term debt as of December 31, 2025 includes Convertible Notes (Note 7), which receive 50% equity credit from ratings organizations.

Table of Contents

## OTHER ISSUES FACING THE COMPANY

### Climate Change Issues

*Background*

For the past several years, management has identified multiple risks and opportunities related to climate change, including the impacts of severe weather events, potential environmental regulation, technological innovation, and availability of fuel and water for operations, as among the most significant risks facing the Company. Accordingly, these risks are overseen by the Board in order to facilitate more integrated risk and strategy oversight and planning. Board oversight includes understanding the various challenges and opportunities presented by these risks, including the financial consequences that might result from enacted and potential federal and/or state regulation of GHG; plans to mitigate these risks; and the impact these risks may have on the Company's strategy. In addition, the Board approves certain procurements of grid modernization technologies and replacement resources.

Management is also responsible for assessing significant risks, developing and executing appropriate responses, and reporting to the Board on the status of risk activities. For example, management periodically updates the Board on the implementation of corporate environmental policy, and the Company's environmental management systems, including the promotion of energy efficiency programs, and the use of renewable resources. The Board is also informed of the Company's practices and procedures to assess the impact of operations on the environment. The Board considers issues associated with climate change, the Company's GHG exposures, and the financial consequences that might result from enacted and potential federal and/or state regulation of GHG. Management has published, with Board oversight, a Climate Change Report available at https://www.txnmenergy.com/sustainability/environment/climate_change_report that details the Company's efforts to transition to a carbon-free generating portfolio.

As part of management's continuing effort to monitor climate-related risks and assess opportunities, the Company has advanced its understanding of climate change by participating in the "2 Degree Scenario" planning by participating in the Electric Power Research Institute ("EPRI") Understanding Climate Scenarios & Goal Setting Activities program. The program focused on characterizing and analyzing the relationship of individual electric utility company's carbon emissions and global temperature goals. Activities included analyzing the scientific understanding of global emissions pathways that are consistent with limiting global warming and providing insight to assist companies in developing approaches to climate scenario planning. As PNM expands its sustainability efforts, EPRI's environmental and climate analysis programs have also been useful in gaining a better understanding of energy and environmental policy and regulations, advanced clean energy technologies, decarbonization trends and climate impacts. In 2022, PNM joined EPRI's Climate READi program which is a strategic initiative convening a global collaborative of electric utilities, thought leaders, scientific researchers and other key stakeholders to strengthen the power sector's collective approach to managing climate risk to the power system. The program is a three-year initiative, through work across three concurrent workstreams, and PNM will benefit from the development of a first-of-its-kind comprehensive framework for managing physical climate risk and investment prioritization that was launched in May 2025.

The Company cannot anticipate or predict the potential long-term effects of climate change or climate change related regulation on its results of operations, financial position, or cash flows.

*Greenhouse Gas Emissions Exposures*

In 2024, GHG emissions associated with PNM's interests in its fossil-fueled generating plants included approximately 1.5 million metric tons of $CO_2$, which comprises the vast majority of PNM's GHG emissions.

As of December 31, 2025, approximately 25% of PNM's generating capacity, including resources owned, leased, and under PPAs, all of which is located within the U.S., consisted of coal or gas-fired generation that produces GHG emissions. As PNM shifts its generation to cleaner energy resources, the Company's output of GHG emissions continues to decrease. Many factors affect the amount of GHG emitted, including total electricity sales, plant performance, economic dispatch, and the availability of renewable resources. For example, wind generation performance varies each year as a result of highly seasonal wind patterns and annual wind resource variability. Similarly, if PVNGS experienced prolonged outages or if PNM's entitlement from PVNGS were reduced, PNM might be required to utilize other power supply resources such as gas-fired generation, which could increase GHG emissions.

PNM has several programs underway to reduce or offset GHG emissions from its generation resource portfolio, thereby reducing its exposure to climate change regulation. The shutdown of SJGS resulted in a reduction of GHG emissions for the entire station allowing PNM to attain GHG emissions reductions goals set forth by the ETA, discussed below.

PNM's utility-owned solar and energy storage capacity, as well as solar, energy storage, wind, and geothermal procurements in service as of December 31, 2025, have a total net generation capacity of 3,244 MW. The NMPRC has approved plans for PNM to procure energy and RECs from additional resources to serve retail customers and a data center located in PNM's service territory. PNM's approved resource plans have a generation capacity of 1,453 MW. This includes approximately 285 MW of capacity under the Community Solar Act which will provide customers an additional option of

Table of Contents

accessing solar energy. PNM will continue to seek approval to procure renewable resources as needed to meet forecasted peak load requirements to serve its customers and New Mexico's RPS and carbon-free resource requirements, while balancing the impact to customers' electricity costs. See additional discussion of these resources in Notes 16 and 17.

PNM also has a customer distributed solar generation program that represented 334.1 MW at December 31, 2025. PNM's distributed solar programs will generate an estimated 668.2 GWh of emission-free solar energy available this year to offset PNM's annual production from fossil-fueled electricity generation. PNM has offered its customers a comprehensive portfolio of energy efficiency and load management programs since 2007. PNM's cumulative savings from these programs were an estimated 9,005 GWh of electricity through 2025. Over the next 20 years, PNM projects energy efficiency and load management programs will provide the equivalent of approximately 12,900 GWh of electricity savings, which will avoid approximately 220,000 tons of $CO_2$ based upon projected emissions from PNM's portfolio of resources. These estimates are subject to change because of the uncertainty of many of the underlying variables, including changes in PNM's generation portfolio, demand for electricity, energy efficiency, and complex relationships between those variables.

Because of PNM's dependence on fossil-fueled generation, legislation or regulation that imposes a limit or cost on GHG could impact the cost at which electricity is produced. While PNM expects to recover any such costs through rates, the timing and outcome of proceedings for cost recovery are uncertain. In addition, to the extent that any additional costs are recovered through rates, customers may reduce their usage, relocate facilities to other areas with lower energy costs, or take other actions that ultimately could adversely impact PNM.

*Other Climate Change Risks*

PNM's generating stations are located in the arid southwest. Access to water for cooling for some of these facilities is critical to continued operations. Forecasts for the impacts of climate change on water supply in the southwest range from reduced precipitation to changes in the timing of precipitation. In either case, PNM's generating facilities requiring water for cooling will need to mitigate the impacts of climate change through adaptive measures. Current measures employed by PNM generating stations include the use of sustainable, less variable groundwater supplies and investments in technologies such as air cooling and cooling water recycling. These types of actions will continue to be important to sustain operations.

PNM's service areas occasionally experience periodic high winds and severe thunderstorms. TNMP has operations in the Gulf Coast area of Texas, which experiences periodic hurricanes and other extreme weather conditions. In addition to potentially causing physical damage to Company-owned facilities, which disrupts the ability to transmit and/or distribute energy, weather and other events of nature can temporarily reduce customers' usage and demand for energy. In addition, other events influenced by climate change, such as wildfires, could disrupt Company operations or result in third-party claims against the Company. PNM has enhanced its wildfire prevention efforts and maintains a wildfire mitigation plan and a public safety power shutoff plan. TNMP has also developed a wildfire mitigation plan. However, both PNM and TNMP remain at risk for wildfires outside of their control and the resulting damages in their service areas.

*EPA Regulation*

In 2007, the US Supreme Court held that EPA has the authority to regulate GHG emissions under the CAA, and in 2009, EPA released its endangerment finding for GHG from new motor vehicles, stating that the atmospheric concentrations of six key greenhouse gases ($CO_2$, methane, nitrous oxides, hydrofluorocarbons, perfluorocarbons, and sulfur hexafluoride) endanger the public health and welfare. These actions triggered new GHG permitting requirements for stationary sources, including the energy industry, under the Prevention of Significant Deterioration ("PSD") and Title V program, although the US Supreme Court held the CAA does not authorize EPA to require a source to obtain a PSD permit solely on the basis of its potential GHG emissions.

EPA also determined that its finding of endangerment requires it to issue performance standards under Section 111 of the CAA to regulate GHG emissions from new and existing stationary sources, including fossil fuel fired electric generating units. Accordingly, in 2015, EPA issued Carbon Pollution Standards for new, modified, and reconstructed power plants (under Section 111(b)) and the Clean Power Plan for existing power plants (under Section 111(d)).

Multiple states, utilities, and trade groups challenged both the Carbon Pollution Standards for new sources and the Clean Power Plan for existing sources in separate cases, and the challengers successfully petitioned the US Supreme Court for a stay of the Clean Power Plan.

In 2019, EPA repealed the Clean Power Plan, promulgated the ACE Rule, and revised the implementing regulations for all emission guidelines issued under CAA Section 111(d). The ACE Rule was also challenged, and on January 19, 2021, the DC Circuit issued an opinion in American Lung Association and American Public Health Association v. EPA, et al. vacating the ACE Rule.

Numerous parties sought review by the US Supreme Court, and on June 30, 2022, the Court held that the "generation shifting" approach in the Clean Power Plan exceeded the powers granted to EPA by Congress, though the Court did not address

Table of Contents

the related issue of whether Section 111 of the CAA only authorizes EPA to require measures that can be implemented entirely within the fence line at an individual source. Of broader significance in administrative law, the Court's opinion expressly invoked the major questions doctrine, which requires rules involving issues of "vast economic or political significance" to be supported by clear statutory authorization. In cases where there is no clear statement of authority, courts need not defer to the agency's statutory interpretation on "major questions." The decision sets legal precedent for future rulemakings by EPA and other federal regulatory agencies whereby the agency's authority may be limited based upon similar reasoning.

The litigation over the Carbon Pollution Standards remains held in abeyance but could be reactivated by the parties upon a determination by the court that reconsideration of the rule has concluded.

In 2024, EPA published in the Federal Register proposed regulatory actions under CAA sections 111(b) and (d) to replace the Clean Power Plan and the ACE Rule and finalized the rules on May 9, 2024. The final rules include revised new source performance standards under Section 111(b) for all new natural gas-fired combustion turbines and emission guidelines under Section 111(d) requiring states to develop standards of performance for GHG emissions from existing fossil-fuel-fired electric steam generating units. In the final rules, EPA determined that the standards for existing coal- or gas-fired steam generating units must be based on the use of either Carbon Capture Storage ("CCS") (long-term), natural gas co-firing (medium-term), or exempt from the rule via early retirement. The standards for new combustion turbines must be based on CCS (base load), efficient simple cycle design (intermediate load), or lower-emitting fuels (low load). Over a dozen states, several industry groups, and some power companies and labor unions have filed challenges to the rule at the DC Circuit. The DC Circuit heard oral arguments on December 6, 2024.

On January 20, 2025, President Trump signed an executive order entitled "Unleashing American Energy" directing all agencies, including EPA, to review all agency actions and suspend, revise, or rescind those identified as imposing an undue burden on domestic energy resources. The order also disbands the Interagency Working Group on the Social Cost of Greenhouse Gases ("IWG"), eliminates the "social cost of carbon" from consideration in any Federal permitting or regulatory decision, and expressly directs EPA to submit joint recommendations on the legality and continuing applicability of the 2009 endangerment finding for greenhouse gases that currently provides the legal basis for EPA to regulate greenhouse gases under the CAA. On March 12, 2025, EPA announced it will formally reconsider the 2009 endangerment finding in collaboration with the Office of Management and Budget and other relevant agencies. On June 17, 2025, EPA published a proposed rule in the Federal Register with two alternatives to repeal or revise the GHG emission standards for EGUs. EPA primarily proposes to find that GHG emissions from fossil fuel-fired power plants "do not contribute significantly to dangerous air pollution" under the meaning of CAA Section 111, which would preclude EPA from regulating GHG emissions from those plants. As a result, EPA is proposing to repeal all GHG standards for the power sector promulgated under CAA Section 111 in both 2015 and 2024. EPA also proposed in the alternative to find that CCS is not adequately demonstrated, and that neither CCS nor gas co-firing are the best system of emission reduction for GHG emissions from power plants, which findings also support repeal of those specific requirements from the rules adopted in 2024. Comments were due by September 15, 2025, and EPA intends to finalize the proposed rule in the first quarter of 2026.

On August 1, 2025, EPA published a proposal to rescind its 2009 final rule commonly known as the Endangerment Finding. In the Endangerment Finding, EPA found that current and projected atmospheric concentrations of the well-mixed combination of six GHGs threaten public health and welfare, and that the combined emissions of these GHGs from new motor vehicles and engines contribute to the GHG pollution that threatens public health and welfare. This provided the basis for EPA's subsequent GHG regulations applicable to stationary sources. Comments were due September 15, 2025. On January 7, 2026, EPA sent the proposed rule rescinding the 2009 Endangerment Finding to OMB. On February 12, 2026, the final rule was finalized as proposed, repealing all GHG emission standards for certain vehicles and engines promulgated on the basis of the Endangerment Finding. While the Endangerment Finding did not directly impose any requirements on EGUs, EPA has cited the Endangerment Finding as a basis for its authority to regulate GHG emissions from EGUs under CAA Section 111.

*Federal Legislation*

In July 2025, President Trump signed the OBBBA, significantly altering the landscape of climate action and clean energy initiatives in the United States. The legislation revises and, in some cases, phases out tax credits established under the IRA and includes restrictions on the availability of credits for "foreign entities of concern," as such term is used in the OBBBA. Given the control of both houses of Congress by the Republican Party, no additional Federal legislation on climate change is expected during this Congress.

*State and Regional Activity*

Pursuant to New Mexico law, each utility must submit an IRP to the NMPRC every three years to evaluate renewable energy, energy efficiency, load management, distributed generation, and conventional supply-side resources on a consistent and comparable basis. The IRP is required to take into consideration risk and uncertainty of fuel supply, price volatility, and costs of anticipated environmental regulations when evaluating resource options to meet supply needs of the utility's customers. The NMPRC requires that New Mexico utilities factor a standardized cost of carbon emissions into their IRPs using prices ranging

Table of Contents

between $8 and $40 per metric ton of $CO_2$ emitted and escalating these costs by 2.5% per year. Under the NMPRC order, each utility must analyze these standardized prices as projected operating costs. Reflecting the evolving nature of this issue, the NMPRC order states that these prices may be changed in the future to account for additional information or changed circumstances. Although these prices may not reflect the costs that ultimately will be incurred, PNM is required to use these prices for purposes of its IRP. PNM's 2023 filing has a continued focus on a carbon-free energy system by 2040. The plan highlights the need for the significant sustained addition of resources over the next two decades, replacing retiring or expiring capacity, meeting concurrent load growth, while reducing the carbon intensity of PNM's portfolio. See Note 17.

The ETA, among other things, requires that investor-owned utilities obtain specified percentages of their energy from renewable and carbon-free resources. The passage of the ETA amended the REA to require utilities operating in New Mexico to have renewable portfolios equal to 40% by 2025, 50% by 2030, 80% by 2040, and 100% zero-carbon energy by 2045. Under the ETA provisions, PNM will also be required to meet a generation emission standard of no more than 400 lbs. of $CO_2$ per MWh beginning in 2023 and not more than 200 lbs. per MWh beginning in 2032. PNM takes this requirement into account in its resource planning and will manage compliance with the standards based upon existing generation resources and approved resource retirements and replacements. The ETA provides for a transition from fossil-fuel generating resources to renewable and other carbon-free resources by allowing investor-owned utilities to issue securitized bonds related to the retirement of coal-fired generating facilities to qualified investors. See additional discussion of the ETA in Note 16.

The ETA has a significant impact on PNM's future generation portfolio. In 2022, in compliance with the ETA, the NMED announced a new rulemaking, Carbon Dioxide Emission Standards for Electric Generating Facilities, to develop carbon emission standards for new and existing electric coal-fired generating facilities. In 2022, the rule was passed which adopts new carbon emission standards for new and existing coal-fired power plants. In compliance with the ETA, PNM filed its first $CO_2$ Emissions Measurement and Compliance Annual Report on March 14, 2025.

In 2020, the NMPRC approved PNM's San Juan abandonment application and for the issuance of securitized bonds consistent with the requirements of the ETA and in 2023 PNM issued the ETBC I Securitized Bonds. PNM cannot predict the full impact of the ETA with respect to Four Corners. See additional discussion of PNM's Four Corners Abandonment Application in Note 17.

The State of California has enacted comprehensive climate-related disclosure laws that will require large entities doing business in the state to measure and disclose Scope 1 and Scope 2 GHG emissions beginning in 2026, Scope 3 GHG emissions beginning in 2027, and to publish biennial reports detailing climate-related financial risk beginning in January 2026. The State of California released proposed regulations in December 2025 with comments due in January 2026. The Company is closely monitoring developments to determine if any TXNM entity would be required to make disclosures under California law and the nature of any such required disclosures.

*International Accords*

The United Nations Framework Convention on Climate Change ("UNFCCC") is an international environmental treaty that was negotiated at the 1992 United Nations Conference on Environment and Development (informally known as the Earth Summit) and entered into force in March 1994. The objective of the treaty is to "stabilize greenhouse gas concentrations in the atmosphere at a level that would prevent dangerous anthropogenic interference with the climate system." Parties to the UNFCCC, including the U.S., have been meeting annually in Conferences of the Parties ("COP") to assess progress in meeting the objectives of the UNFCCC.

In 2015, the Paris Agreement was finalized during the 2015 COP. The aim of the Paris Agreement is to limit global temperature rise to two degrees Celsius above pre-industrial levels. The agreement, which was agreed to by approximately 200 parties, requires that countries submit INDCs. INDCs reflect national targets and actions that arise out of national policies and elements relating to oversight, guidance and coordination of actions to reduce emissions by all countries. In 2017, President Trump announced that the U.S. would withdraw from the Paris Agreement. As a result of the President's notice to the United Nations, the U.S. officially withdrew from the Paris Agreement on November 4, 2020. On January 20, 2021, President Biden signed an instrument that will allow the U.S. to rejoin the Paris Agreement on Climate Change. The instrument was deposited with the United Nations on January 21, 2021, and the U.S. officially became a party to the Agreement on February 19, 2021. On January 20, 2025, President Trump signed an executive order entitled "Putting America First in International Environmental Agreements," directing the United States Ambassador to the United Nations to immediately submit formal written notification of the United States' withdrawal from the Paris Agreement and any other agreement, pact, accord, or similar commitment made under the United Nations Framework Convention on Climate Change.

PNM has calculated GHG reductions that would result from scenarios that capture PNM's retirement of its share of the SJGS in 2022 and assume exiting Four Corners in 2031 and PNM has set a goal to have a 100% carbon-free generating portfolio by 2040. Achieving our goal of carbon-free by 2040 is dependent on balancing reliability, cost-considerations, and maturity of emerging technologies. While the Company has not conducted an independent 2 Degree Scenario analysis, our commitment to becoming 100% carbon-free produces a carbon emissions reduction pathway that tracks within the ranges of climate scenario pathways that are consistent with limiting the global warming average to less than 2 degrees Celsius. In

Table of Contents

addition, as an investor-owned utility operating in the state of New Mexico, PNM is required to comply with the ETA, which requires utilities' generating portfolio be 100% carbon-free by 2045. The requirements of the ETA and the Company's goal compare favorably to the U.S. INDC of 50% to 52% carbon emissions reduction by 2030. On April 1, 2020, the NMPRC approved PNM's application to retire its share of SJGS in 2022. See Note 17.

PNM will continue to monitor the United States' move to withdraw from the Paris Agreement and other parties' involvement in these types of international accords, but the potential impact that such accords may have on the Company cannot be determined at this time.

*Assessment of Legislative/Regulatory Impacts*

The Company has assessed, and continues to assess, the impacts of climate change legislation and regulation on its business. This assessment is ongoing and future changes arising out of the legislative or regulatory process could impact the assessment significantly. PNM's assessment includes assumptions regarding specific GHG limits; the timing of implementation of these limits; the possibility of a market-based trading program, including the associated costs and the availability of emission credits or allowances; the development of emission reduction and/or renewable energy technologies; and provisions for cost containment. Moreover, the assessment assumes various market reactions such as the price of coal and gas and regional plant economics. These assumptions are, at best, preliminary and speculative. However, based upon these assumptions, the enactment of climate change legislation or regulation could, among other things, result in significant compliance costs, including large capital expenditures by PNM, and could jeopardize the Company's reputation as well as the economic viability of certain generating facilities. See Notes 16 and 17. The ultimate consequences of increased stakeholder scrutiny related to climate change and environmental regulation could lead to increased costs to customers and affect results of operations, cash flows, and financial condition if the incurred costs are not fully recovered through regulated rates. Higher rates could also contribute to reduced usage of electricity. PNM's assessment process is evolving and is too speculative at this time for a meaningful prediction of the long-term financial impact.

**Transmission Issues**

At any given time, FERC has various notices of inquiry and rulemaking dockets related to transmission issues pending. Such actions may lead to changes in FERC administrative rules or ratemaking policy but have no time frame in which action must be taken or a docket closed with no further action. Further, such notices and rulemaking dockets do not apply strictly to PNM but will have industry-wide effects in that they will apply to all FERC-regulated entities. PNM monitors and often submits comments taking a position in such notices and rulemaking dockets or may join in larger group responses. PNM often cannot determine the full impact of a proposed rule and policy change until the final determination is made by FERC and PNM is unable to predict the outcome of these matters.

**Other Matters**

See Notes 16 and 17 for a discussion of commitments and contingencies and rate and regulatory matters.

## CRITICAL ACCOUNTING POLICIES AND ESTIMATES

The preparation of financial statements in accordance with GAAP requires management to apply accounting policies and to make estimates and judgments that best provide the framework to report the results of operations and financial position for TXNM, PNM, and TNMP. As a result, there exists the likelihood that materially different amounts would be reported under different conditions or using different assumptions. Management has identified the following accounting policies that it deems critical to the portrayal of the financial condition and results of operations and that involve significant subjectivity. The following discussion provides information on the processes utilized by management in making judgments and assumptions as they apply to its critical accounting policies.

**Regulatory Accounting**

The Company is subject to the provisions of GAAP for rate-regulated enterprises and records assets and liabilities resulting from the effects of the ratemaking process, which would not be recorded under GAAP for non-regulated entities. Additional information concerning regulatory assets and liabilities is contained in Note 13.

The Company continually evaluates the probability that regulatory assets and liabilities will impact future rates and make various assumptions in those analyses. The expectations of future rate impacts are generally based on orders issued by regulatory commissions or historical experience, as well as discussions with applicable regulatory authorities. If future recovery or refund ceases to be probable, the Company would be required to write-off the portion that is not recoverable or refundable in current period earnings.

The Company has made adjustments to regulatory assets and liabilities that affected its results of operations in the past due to changes in various factors and conditions impacting future cost recovery. Based on its current evaluation, the Company believes that future recovery of its regulatory assets is probable.

Table of Contents

**Impairments**

Tangible long-lived assets are evaluated for impairment when events and circumstances indicate that the assets might be impaired. These potential impairment indicators include management's assessment of fluctuating market conditions as a result of planned and scheduled customer purchase commitments; future market penetration; changing environmental requirements; fluctuating market prices resulting from factors including changing fuel costs and other economic conditions; long-term weather patterns; and other market trends. The amount of impairment recognized, if any, is the difference between the fair value of the asset and the carrying value of the asset and would reduce both the asset and current period earnings. Variations in the assessment of potential impairment or in the assumptions used to calculate an impairment could result in different outcomes, which could lead to significant effects on the Consolidated Financial Statements. See Notes 16 and 17.

Goodwill is evaluated for impairment at least annually, or more frequently if events and circumstances indicate that the goodwill might be impaired. Impairment testing may be performed based on either a qualitative analysis or quantitative analysis. Note 19 contains information on the impairment testing performed by the Company on goodwill. For 2025, the Company utilized a quantitative analysis for the PNM reporting unit and a qualitative analysis for the TNMP reporting unit. No impairments were indicated in the Company's annual goodwill testing, which was performed as of April 1, 2025. Since the annual evaluation, there have been no indications that the fair values of the reporting units with recorded goodwill have decreased below the carrying values. The annual testing was based on certain critical estimates and assumptions. Changes in the estimates or the use of different assumptions could affect the determination of fair value and the conclusion of impairment for each reporting unit.

Application of the qualitative goodwill impairment test requires evaluating various events and circumstances to determine whether it is not more likely than not that the fair value of a reporting unit is less than its carrying amount. As a part of the Company's goodwill qualitative testing process for a reporting unit, various factors that are specific to that reporting unit as well as industry and macroeconomic factors are evaluated in order to determine whether these factors are reasonably likely to have a material impact on the fair value of the reporting unit. Examples of the factors that were considered in the qualitative testing of the goodwill include the results of the most recent quantitative impairment test, current and long-term forecasted financial results, regulatory environment, credit rating, changes in the interest rate environment, and operating strategy for the reporting unit.

Based on the analysis performed for the PNM and TNMP reporting units in 2025, the Company concluded that there were no changes that were reasonably likely to cause the fair value of the reporting units to be less than their carrying value and determined that there was no impairment of goodwill. Although the Company believes all relevant factors were considered in the qualitative impairment analysis to reach the conclusion that goodwill is not impaired, significant changes in any one of the assumptions could produce a significantly different result potentially leading to the recording of an impairment that could have significant impacts on the results of operations and financial position of the Company.

**Decommissioning and Reclamation Costs**

PNM is only required to recognize and measure decommissioning liabilities for tangible long-lived assets for which a legal obligation exists. Accounting for decommissioning costs for nuclear and fossil-fuel generation involves significant estimates related to costs to be incurred many years in the future after plant closure. Decommissioning costs are based on site-specific estimates, which are updated periodically and involve numerous judgments and assumptions, including estimates of future decommissioning costs at current price levels, inflation rates, and discount rates. Changes in these estimates could significantly impact TXNM's and PNM's financial position, results of operations, and cash flows. Nuclear decommissioning costs are based on estimates of the costs for removing all radioactive and other structures at PVNGS. AROs, including nuclear decommissioning costs, are discussed in Note 15. Nuclear decommissioning costs represent approximately 76% of PNM's ARO liability. A 10% increase in the estimates of future decommissioning costs at current price levels would have increased the ARO liability by $15.0 million at December 31, 2025. PNM recognizes an expense and a corresponding liability for ultimate decommissioning of PVNGS. See Note 17 for information concerning NMPRC's order to address the recovery of decommissioning costs in a future proceeding.

In connection with both the SJGS coal agreement and the Four Corners fuel agreement, the owners and former owners are required to reimburse the mining companies for the cost of contemporaneous reclamation, as well as the costs for final reclamation of the coal mines. The reclamation costs are based on periodic site-specific studies that estimate the costs to be incurred in the future and are dependent upon numerous assumptions, including estimates of future reclamation costs at current price levels, inflation rates, and discount rates. A 10% increase in the estimates of future reclamation costs at current price levels would have increased the mine reclamation liability by $18.4 million at December 31, 2025. PNM considers the contemporaneous reclamation costs part of the cost of its delivered coal costs. The NMPRC has capped the amount that can be collected from ratepayers for final reclamation of the surface mines. If future estimates increase the liability for surface mine reclamation, the excess would be expensed at that time. See Note 16 for discussion of reclamation costs.

**Pension and Other Postretirement Benefits**

The Company maintains qualified defined benefit pension plans, postretirement benefit plans providing medical and dental benefits, and executive retirement programs. The net periodic benefit cost or income and the calculation of the projected benefit obligations are recognized in the Company's financial statements and depend on expected investment performance, the

Table of Contents

level of contributions made to the plans, and employee demographics. These calculations require the use of a number of actuarial assumptions and estimates. The most critical of the actuarial assumptions are the expected long-term rate of return, the discount rate, and projected health care cost trend rates. The Company reviews and evaluates its actuarial assumptions annually and adjusts them as necessary. Changes in the pension and OPEB assets and liabilities associated with these factors are not immediately recognized as net periodic benefit cost or income in results of operations, but are recognized in future years, generally, over the remaining life of the plan. However, these factors could have a significant impact on the financial position of the Company. Note 11 contains additional information about pension and OPEB obligations, including assumptions utilized in the calculations and impacts of changes in certain of those assumptions.

**Accounting for Contingencies**

The financial results of the Company may be affected by judgments and estimates related to loss contingencies. Contingencies related to litigation and claims, as well as environmental and regulatory matters, also require the use of significant judgment and estimation. The Company attempts to take into account all known factors regarding the future outcome of contingent events and records an accrual for any contingent loss events that are both probable of occurring and can be reasonably estimated based upon current available information. However, the actual outcomes can vary from any amounts accrued which could have a material effect on the results of operations and financial position of the Company. See Note 16 and Note 17.

**Income Taxes**

The Company's income tax expense and related balance sheet amounts involve significant judgment and use of estimates. Amounts of deferred income tax assets and liabilities, current and noncurrent accruals, and determination of uncertain tax positions involve judgment and estimates related to timing and probability of the recognition of income and deductions by taxing authorities. In addition, some temporary differences are accorded flow-through treatment by the Company's regulators and impact the Company's effective tax rate. In assessing the likelihood of the realization of deferred tax assets, management considers the estimated amount and character of future taxable income. Significant changes in these judgments and estimates could have a material impact on the results of operations and financial position of the Company. Actual income taxes could vary from estimated amounts due to the future impacts of various items, including changes in income tax laws, the Company's forecasted financial condition and results of operations in future periods, and the final review from taxing authorities. See Note 18.

***MD&A FOR PNM***
**RESULTS OF OPERATIONS**

PNM operates in only one reportable segment, as presented above in Results of Operations for TXNM.

***MD&A FOR TNMP***
**RESULTS OF OPERATIONS**

TNMP operates in only one reportable segment, as presented above in Results of Operations for TXNM.

**ITEM 7A. QUANTITATIVE AND QUALITATIVE DISCLOSURES ABOUT MARKET RISK**

The Company manages the scope of its various forms of market risk through a comprehensive set of policies and procedures with oversight by senior level management through the Risk Management Committee ("RMC"). The Board's Finance Committee sets the risk limit parameters. The RMC has oversight over the risk control organization. The RMC is assigned responsibility for establishing and enforcing the policies, procedures, and limits and evaluating the risks inherent in proposed transactions on an enterprise-wide basis.

The RMC's responsibilities include:

- Establishing policies regarding risk tolerance levels and activities in each of the business segments
- Approving new types of derivatives entered into for marketing and hedging
- Reviewing and approving hedging risk activities
- Establishing policies regarding counterparty credit exposure and limits
- Authorizing and delegating transaction limits
- Reviewing and approving controls and procedures for derivative activities
- Reviewing and approving models and assumptions used to calculate mark-to-market and market risk exposure
- Proposing risk limits to the Board's Finance Committee for its approval
- Reporting to the Board's Audit and Finance Committees on these activities

To the extent an open position exists, fluctuating commodity prices, interest rates, equity prices, and economic conditions can impact financial results and financial position, either favorably or unfavorably. As a result, the Company cannot

Table of Contents

predict with certainty the impact that its risk management decisions may have on its businesses, operating results, or financial position.

**Commodity Risk**

Information concerning accounting for derivatives and the risks associated with commodity contracts is set forth in Note 9, including a summary of the fair values of mark-to-market energy related derivative contracts included in the Consolidated Balance Sheets. During the years ended December 31, 2025 and 2024, the Company had no commodity derivative instruments designated as cash flow hedging instruments.

Commodity contracts that meet the definition of a derivative, are recorded at fair value on the Consolidated Balance Sheets. During the years ended December 31, 2025 and 2024, the effects of mark-to-market commodity derivative instruments had no impact to PNM's net earnings and zero and $5.7 million of fair value gains have been recorded as a regulatory asset. All of the fair values were determined based on prices provided by external sources other than actively quoted market prices.

PNM may be exposed to changes in the market prices of electricity and natural gas for the positions in its wholesale portfolio not covered by the FPPAC. The Company manages risks associated with market fluctuations by utilizing various commodity instruments that may qualify as derivatives, including futures, forwards, options, and swaps. PNM uses such instruments to hedge its exposure to changes in the market prices of electricity and natural gas. PNM also uses such instruments under an NMPRC approved hedging plan from time-to-time, to manage fuel and purchased power costs related to customers covered by its FPPAC.

**Credit Risk**

The Company is exposed to credit risk from its retail and wholesale customers, as well as the counterparties to derivative instruments. The Company conducts counterparty risk analysis across business segments and uses a credit management process to assess the financial conditions of counterparties. The following table provides information related to credit exposure by the credit worthiness (credit rating) and concentration of credit risk for wholesale counterparties, all of which will mature in less than two years.

**Schedule of Credit Risk Exposure**
**December 31, 2025**

| Rating [1] | Credit Risk Exposure [2] | Number of Counter-parties >10% | Net Exposure of Counter-parties >10% |
|---|---|---|---|
| | | (Dollars in thousands) | |
| External ratings: | | | |
| Investment grade | $ 1,132 | 2 | $ 650 |
| Non-investment grade | — | — | — |
| Split ratings | — | — | — |
| Internal ratings: | | | |
| Investment grade | 596 | — | — |
| Non-investment grade | — | — | — |
| Total | $ 1,728 | | $ 650 |

(1) The rating "Investment Grade" is for counterparties, or a guarantor, with a minimum S&P rating of BBB- or Moody's rating of Baa3. The category "Internal Ratings – Investment Grade" includes those counterparties that are internally rated as investment grade in accordance with the guidelines established in the Company's credit policy.

(2) The Credit Risk Exposure is the gross credit exposure, including long-term contracts, forward sales, and short-term sales. The gross exposure captures the amounts from receivables/payables for realized transactions, delivered and unbilled revenues, and mark-to-market gains/losses. Gross exposures can be offset according to legally enforceable netting arrangements but are not reduced by posted credit collateral. At December 31, 2025, TXNM held zero of cash collateral to offset its credit exposure.

Net credit risk for the Company's largest counterparty as of December 31, 2025, was $0.4 million.

Other investments have no significant counterparty credit risk.

**Interest Rate Risk**

The majority of PNM's and TNMP's long-term debt is fixed-rate debt, which does not expose earnings to adverse changes in market interest rates. PNM and TNMP earnings are exposed to adverse changes in market interest rates when long-term debt must be refinanced, repriced or redeemed. TXNM's debt and the revolving credit facilities of PNM and TNMP are exposed to interest rate risk to the extent variable interest rates rise. The Company periodically makes plans to reduce its

Table of Contents

variable interest rate exposures through various instruments including fixed rate debt and equity and hedging arrangements and otherwise expects that it will be able to extend or replace variable rate debt under similar terms and conditions prior to their expirations. Variable interest rates under the TXNM, PNM, and TNMP revolving credit facilities and term loans are based on SOFR.

At February 13, 2026, variable rate debt balances and weighted average interest rates were as follows:

| Variable Rate Debt | Weighted Average Interest Rate | Balance Outstanding | Capacity |
|---|---|---|---|
| | | (In thousands) | |
| Short-term Debt: | | | |
| TXNM Revolving Credit Facility | 5.16 % | $ 56,500 | $ 300,000 |
| PNM Revolving Credit Facility | 4.91 | 209,100 | 400,000 |
| PNM New Mexico Credit Facility | 5.02 | 40,000 | 40,000 |
| TNMP Revolving Credit Facility | 4.54 | 49,700 | 300,000 |
| | | $ 355,300 | $ 1,040,000 |
| Long-term Debt: | | | |
| PNM 2025 Term Loan | 4.67 | 195,000 | |
| PNM November 2025 Term Loan | 4.56 | 120,000 | |
| | | $ 315,000 | |

The investments held by PNM in trusts for decommissioning, reclamation, pension benefits, and other post-employment benefits had an estimated fair value of $876.9 million at December 31, 2025, of which 16.4% were fixed-rate debt securities that subject PNM to risk of loss of fair value with increases in market interest rates. If interest rates were to increase by 50 basis points from their levels at December 31, 2025, the decrease in the fair value of the fixed-rate securities would be 5.7%, or $8.2 million. The securities held by TNMP in trusts for pension and other post-employment benefits had an estimated fair value of $45.1 million at December 31, 2025, of which 29.0% were fixed-rate debt securities that subject TNMP to risk of loss of fair value with movements in market interest rates. If interest rates were to increase by 50 basis points from their levels at December 31, 2025, the decrease in the fair value of the fixed-rate securities would be 5.6%, or $0.7 million.

PNM and TNMP do not directly recover or return through rates any losses or gains on the securities, including equity and alternative investments discussed below, in the trusts for decommissioning, reclamation, pension benefits, and other post-employment benefits. However, the overall performance of these trusts does enter into the periodic determinations of expense and funding levels, which are factored into the rate making process to the extent applicable to regulated operations. PNM and TNMP are at risk for shortfalls in funding of obligations due to investment losses, including those from the equity market and alternatives investment risks discussed below, to the extent not ultimately recovered through rates charged to customers.

**Equity Market Risk**

The investments held by PNM in trusts for decommissioning and reclamation and trusts established for PNM's and TNMP's pension and post-employment benefits plans include certain equity securities at December 31, 2025. These equity securities expose PNM and TNMP to losses in fair value should the market values of the underlying securities decline. Equity securities comprised 69.9% and 55.3% of the securities held by the various PNM and TNMP trusts as of December 31, 2025. A hypothetical 10% decrease in equity prices would reduce the fair values of these funds by $61.3 million for PNM and $2.5 million for TNMP.

**Alternatives Investment Risk**

As of December 31, 2025, PNM and TNMP had 9.7% and 15.7% of its pension assets invested in the alternative asset class. Alternative investments include investments in hedge funds, real estate funds, and private equity funds. The hedge funds and private equity funds are limited partner structures that are structured as multi-manager multi-strategy fund of funds to achieve a diversified position in these asset classes. The general partner oversees the selection and monitoring of the underlying managers. The hedge funds pursue various absolute return strategies such as relative value, long-short equity, and event driven. Private equity fund strategies include mezzanine financing, buy-outs, and venture capital. The real estate investments are commingled real estate portfolios that invest in a diversified portfolio of assets including commercial property and multi-family housing. The Company's Corporate Investment Committee, assisted by its investment consultants, monitors the performance of the funds and general partner's investments process. There is risk associated with these funds due to the nature of the strategies and techniques and the use of investments that do not have readily determinable fair values. A hypothetical 10% decrease in equity prices would reduce the fair values of these funds by $8.5 million for PNM and $0.7 million for TNMP.

Table of Contents

**ITEM 8. FINANCIAL STATEMENTS AND SUPPLEMENTARY DATA**

**TXNM ENERGY, INC. AND SUBSIDIARIES**
**PUBLIC SERVICE COMPANY OF NEW MEXICO AND SUBSIDIARIES**
**TEXAS-NEW MEXICO POWER COMPANY AND SUBSIDIARIES**

**INDEX**


| | Page |
|---|---|
| Management's Annual Reports on Internal Control Over Financial Reporting | 2 |
| Reports of Independent Registered Public Accounting Firm (PCAOB ID 185) | 5 |
| Financial Statements: | |
| TXNM Energy, Inc. and Subsidiaries | |
| Consolidated Statements of Earnings | 11 |
| Consolidated Statements of Comprehensive Income | 12 |
| Consolidated Statements of Cash Flows | 13 |
| Consolidated Balance Sheets | 15 |
| Consolidated Statements of Changes in Equity | 17 |
| Public Service Company of New Mexico and Subsidiaries | |
| Consolidated Statements of Earnings | 18 |
| Consolidated Statements of Comprehensive Income | 19 |
| Consolidated Statements of Cash Flows | 20 |
| Consolidated Balance Sheets | 22 |
| Consolidated Statements of Changes in Equity | 24 |
| Texas-New Mexico Power Company and Subsidiaries | |
| Consolidated Statements of Earnings | 25 |
| Consolidated Statements of Cash Flows | 26 |
| Consolidated Balance Sheets | 28 |
| Consolidated Statements of Changes in Common Stockholder's Equity | 30 |
| Notes to Consolidated Financial Statements | 31 |
| Supplementary Data: | |
| Schedule I - Condensed Financial Information of Parent Company | 117 |
| Schedule II - Valuation and Qualifying Accounts | 120 |

Table of Contents

**MANAGEMENT'S ANNUAL REPORT ON INTERNAL CONTROL OVER FINANCIAL REPORTING**

Management of TXNM Energy, Inc. and subsidiaries ("TXNM") is responsible for establishing and maintaining adequate internal control over financial reporting as defined in Rule 13a-15(f) under the Securities Exchange Act of 1934, as amended.

Management assessed the effectiveness of TXNM's internal control over financial reporting based on the *Internal Control – Integrated Framework (2013)* set forth by the Committee of Sponsoring Organizations of the Treadway Commission. Based on the assessment performed, management concludes that TXNM's internal control over financial reporting was effective as of December 31, 2025.

The effectiveness of our internal control over financial reporting as of and for the year ended December 31, 2025 has been audited by KPMG LLP, an independent registered public accounting firm, as stated in their audit report which is included herein.

/s/ Joseph D. Tarry
Joseph D. Tarry,
President and Chief Executive Officer

/s/ Henry E. Monroy
Henry E. Monroy,
Senior Vice President and Chief Financial Officer

Table of Contents

**MANAGEMENT'S ANNUAL REPORT ON INTERNAL CONTROL OVER FINANCIAL REPORTING**

Management of Public Service Company of New Mexico and subsidiaries ("PNM") is responsible for establishing and maintaining adequate internal control over financial reporting as defined in Rule 13a-15(f) under the Securities Exchange Act of 1934, as amended.

Management assessed the effectiveness of PNM's internal control over financial reporting based on the *Internal Control – Integrated Framework (2013)* set forth by the Committee of Sponsoring Organizations of the Treadway Commission. Based on the assessment performed, management concludes that PNM's internal control over financial reporting was effective as of December 31, 2025.

/s/ Joseph D. Tarry
Joseph D. Tarry,
President and Chief Executive Officer

/s/ Henry E. Monroy
Henry E. Monroy,
Senior Vice President and Chief Financial Officer

Table of Contents

**MANAGEMENT'S ANNUAL REPORT ON INTERNAL CONTROL OVER FINANCIAL REPORTING**

Management of Texas-New Mexico Power Company and subsidiaries ("TNMP") is responsible for establishing and maintaining adequate internal control over financial reporting as defined in Rule 13a-15(f) under the Securities Exchange Act of 1934, as amended.

Management assessed the effectiveness of TNMP's internal control over financial reporting based on the *Internal Control – Integrated Framework (2013)* set forth by the Committee of Sponsoring Organizations of the Treadway Commission. Based on the assessment performed, management concludes that TNMP's internal control over financial reporting was effective as of December 31, 2025.

/s/ Joseph D. Tarry
Joseph D. Tarry,
Chief Executive Officer

/s/ Henry E. Monroy
Henry E. Monroy,
Senior Vice President and Chief Financial Officer

Table of Contents

**Report of Independent Registered Public Accounting Firm**

To the Stockholders and Board of Directors
TXNM Energy, Inc.:

*Opinions on the Consolidated Financial Statements and Internal Control Over Financial Reporting*

We have audited the accompanying consolidated balance sheets of TXNM Energy, Inc. and subsidiaries (the Company) as of December 31, 2025 and 2024, the related consolidated statements of earnings, comprehensive income, changes in equity, and cash flows for each of the years in the three-year period ended December 31, 2025, and the related notes and financial statement Schedule I - Condensed Financial Information of Parent Company and Schedule II - Valuation and Qualifying Accounts (collectively, the consolidated financial statements). We also have audited the Company's internal control over financial reporting as of December 31, 2025, based on criteria established in *Internal Control – Integrated Framework (2013)* issued by the Committee of Sponsoring Organizations of the Treadway Commission.

In our opinion, the consolidated financial statements referred to above present fairly, in all material respects, the financial position of the Company as of December 31, 2025 and 2024, and the results of its operations and its cash flows for each of the years in the three-year period ended December 31, 2025, in conformity with U.S. generally accepted accounting principles. Also in our opinion, the Company maintained, in all material respects, effective internal control over financial reporting as of December 31, 2025 based on criteria established in *Internal Control – Integrated Framework (2013)* issued by the Committee of Sponsoring Organizations of the Treadway Commission.

*Basis for Opinions*

The Company's management is responsible for these consolidated financial statements, for maintaining effective internal control over financial reporting, and for its assessment of the effectiveness of internal control over financial reporting, included in the accompanying Management's Annual Report on Internal Control over Financial Reporting. Our responsibility is to express an opinion on the Company's consolidated financial statements and an opinion on the Company's internal control over financial reporting based on our audits. We are a public accounting firm registered with the Public Company Accounting Oversight Board (United States) (PCAOB) and are required to be independent with respect to the Company in accordance with the U.S. federal securities laws and the applicable rules and regulations of the Securities and Exchange Commission and the PCAOB.

We conducted our audits in accordance with the standards of the PCAOB. Those standards require that we plan and perform the audits to obtain reasonable assurance about whether the consolidated financial statements are free of material misstatement, whether due to error or fraud, and whether effective internal control over financial reporting was maintained in all material respects.

Our audits of the consolidated financial statements included performing procedures to assess the risks of material misstatement of the consolidated financial statements, whether due to error or fraud, and performing procedures that respond to those risks. Such procedures included examining, on a test basis, evidence regarding the amounts and disclosures in the consolidated financial statements. Our audits also included evaluating the accounting principles used and significant estimates made by management, as well as evaluating the overall presentation of the consolidated financial statements. Our audit of internal control over financial reporting included obtaining an understanding of internal control over financial reporting, assessing the risk that a material weakness exists, and testing and evaluating the design and operating effectiveness of internal control based on the assessed risk. Our audits also included performing such other procedures as we considered necessary in the circumstances. We believe that our audits provide a reasonable basis for our opinions.

*Definition and Limitations of Internal Control Over Financial Reporting*

A company's internal control over financial reporting is a process designed to provide reasonable assurance regarding the reliability of financial reporting and the preparation of financial statements for external purposes in accordance with generally accepted accounting principles. A company's internal control over financial reporting includes those policies and procedures that (1) pertain to the maintenance of records that, in reasonable detail, accurately and fairly reflect the transactions and dispositions of the assets of the company; (2) provide reasonable assurance that transactions are recorded as necessary to permit preparation of financial statements in accordance with generally accepted accounting principles, and that receipts and expenditures of the company are being made only in accordance with authorizations of management and directors of the

Table of Contents

company; and (3) provide reasonable assurance regarding prevention or timely detection of unauthorized acquisition, use, or disposition of the company's assets that could have a material effect on the financial statements.

Because of its inherent limitations, internal control over financial reporting may not prevent or detect misstatements. Also, projections of any evaluation of effectiveness to future periods are subject to the risk that controls may become inadequate because of changes in conditions, or that the degree of compliance with the policies or procedures may deteriorate.

*Critical Audit Matter*

The critical audit matter communicated below is a matter arising from the current period audit of the consolidated financial statements that was communicated or required to be communicated to the audit committee and that: (1) relates to accounts or disclosures that are material to the consolidated financial statements and (2) involved our especially challenging, subjective, or complex judgments. The communication of a critical audit matter does not alter in any way our opinion on the consolidated financial statements, taken as a whole, and we are not, by communicating the critical audit matter below, providing a separate opinion on the critical audit matter or on the accounts or disclosures to which it relates.

*Evaluation of regulatory assets and liabilities*

As discussed in Notes 1, 13, and 17 to the consolidated financial statements, the Company accounts for their regulated operations in accordance with Financial Accounting Standards Board Accounting Standard Codification Topic 980, Regulated Operations (ASC Topic 980). Pursuant to the requirements of ASC Topic 980, the financial statements of a rate-regulated enterprise reflect the actions of regulators. The Company capitalizes, as regulatory assets, incurred and accrued costs that are probable of recovery in future electric rates. In addition, obligations to refund previously collected revenue or to spend revenue collected from customers on future costs are recorded as regulatory liabilities. The Company is subject to comprehensive federal, state and local regulation and legislation, including regulations promulgated by the New Mexico Public Regulation Commission, Public Utility Commission of Texas, and the Federal Energy Regulatory Commission.

We have identified the evaluation of regulatory assets and liabilities as a critical audit matter. This was due to the extent of audit effort required in the evaluation of regulatory assets and liabilities in each of the relevant jurisdictions.

The following are the primary procedures we performed to address this critical audit matter. We evaluated the design and tested the operating effectiveness of certain internal controls over the Company's regulatory accounting process, including controls related to the Company's application of ASC Topic 980 in each jurisdiction and the Company's calculation and review of regulatory assets and liabilities. We selected regulatory assets and liabilities and assessed the Company's application of ASC Topic 980 in the relevant jurisdiction by evaluating the underlying orders, statutes, rulings, memorandums, filings or publications issued by the respective regulators. We selected a sample of the regulatory assets and liabilities activity and using the methodologies approved by the relevant regulatory commissions, recalculated the activity and agreed the data used in the calculations to the Company's underlying books and records. We compared the amounts calculated by the Company to the amounts recorded in the consolidated financial statements.

/s/ KPMG LLP

We have served as the Company's auditor since 2013.

Boston, Massachusetts
February 27, 2026

Table of Contents

**Report of Independent Registered Public Accounting Firm**

To the Stockholders and Board of Directors
Public Service Company of New Mexico:

*Opinion on the Consolidated Financial Statements*

We have audited the accompanying consolidated balance sheets of Public Service Company of New Mexico and subsidiaries (the Company) as of December 31, 2025 and 2024, the related consolidated statements of earnings, comprehensive income, changes in equity, and cash flows for each of the years in the three-year period ended December 31, 2025, and the related notes and financial statement Schedule II - Valuation and Qualifying Accounts (collectively, the consolidated financial statements). In our opinion, the consolidated financial statements present fairly, in all material respects, the financial position of the Company as of December 31, 2025 and 2024, and the results of its operations and its cash flows for each of the years in the three-year period ended December 31, 2025, in conformity with U.S. generally accepted accounting principles.

*Basis for Opinion*

These consolidated financial statements are the responsibility of the Company's management. Our responsibility is to express an opinion on these consolidated financial statements based on our audits. We are a public accounting firm registered with the Public Company Accounting Oversight Board (United States) (PCAOB) and are required to be independent with respect to the Company in accordance with the U.S. federal securities laws and the applicable rules and regulations of the Securities and Exchange Commission and the PCAOB.

We conducted our audits in accordance with the standards of the PCAOB. Those standards require that we plan and perform the audit to obtain reasonable assurance about whether the consolidated financial statements are free of material misstatement, whether due to error or fraud. The Company is not required to have, nor were we engaged to perform, an audit of its internal control over financial reporting. As part of our audits, we are required to obtain an understanding of internal control over financial reporting but not for the purpose of expressing an opinion on the effectiveness of the Company's internal control over financial reporting. Accordingly, we express no such opinion.

Our audits included performing procedures to assess the risks of material misstatement of the consolidated financial statements, whether due to error or fraud, and performing procedures that respond to those risks. Such procedures included examining, on a test basis, evidence regarding the amounts and disclosures in the consolidated financial statements. Our audits also included evaluating the accounting principles used and significant estimates made by management, as well as evaluating the overall presentation of the consolidated financial statements. We believe that our audits provide a reasonable basis for our opinion.

*Critical Audit Matter*

The critical audit matter communicated below is a matter arising from the current period audit of the consolidated financial statements that was communicated or required to be communicated to the audit committee and that: (1) relates to accounts or disclosures that are material to the consolidated financial statements and (2) involved our especially challenging, subjective, or complex judgments. The communication of a critical audit matter does not alter in any way our opinion on the consolidated financial statements, taken as a whole, and we are not, by communicating the critical audit matter below, providing a separate opinion on the critical audit matter or on the accounts or disclosures to which it relates.

*Evaluation of regulatory assets and liabilities*

As discussed in Notes 1, 13, and 17 to the consolidated financial statements, the Company accounts for their regulated operations in accordance with Financial Accounting Standards Board Accounting Standard Codification Topic 980, Regulated Operations (ASC Topic 980). Pursuant to the requirements of ASC Topic 980, the financial statements of a rate-regulated enterprise reflect the actions of regulators. The Company capitalizes, as regulatory assets, incurred and accrued costs that are probable of recovery in future electric rates. In addition, obligations to refund previously collected revenue or to spend revenue collected from customers on future costs are recorded as regulatory liabilities. The Company is subject to comprehensive federal, state and local regulation and legislation, including regulations promulgated by the New Mexico Public Regulation Commission and the Federal Energy Regulatory Commission.

We have identified the evaluation of regulatory assets and liabilities as a critical audit matter. This was due to the extent of audit effort required in the evaluation of regulatory assets and liabilities in each of the relevant jurisdictions.

Table of Contents

The following are the primary procedures we performed to address this critical audit matter. We evaluated the design and tested the operating effectiveness of certain internal controls over the Company's regulatory accounting process, including controls related to the Company's application of ASC Topic 980 in each jurisdiction and the Company's calculation and review of regulatory assets and liabilities. We selected regulatory assets and liabilities and assessed the Company's application of ASC Topic 980 in the relevant jurisdiction by evaluating the underlying orders, statutes, rulings, memorandums, filings or publications issued by the respective regulators. We selected a sample of the regulatory assets and liabilities activity and using the methodologies approved by the relevant regulatory commissions, recalculated the activity and agreed the data used in the calculations to the Company's underlying books and records. We compared the amounts calculated by the Company to the amounts recorded in the consolidated financial statements.

/s/ KPMG LLP

We have served as the Company's auditor since 2013.

Boston, Massachusetts
February 27, 2026

Table of Contents

**Report of Independent Registered Public Accounting Firm**

To the Stockholder and Board of Directors
Texas-New Mexico Power Company:

*Opinion on the Consolidated Financial Statements*

We have audited the accompanying consolidated balance sheets of Texas-New Mexico Power Company and subsidiaries (the Company) as of December 31, 2025 and 2024, the related consolidated statements of earnings, changes in common stockholder's equity, and cash flows for each of the years in the three-year period ended December 31, 2025, and the related notes and financial statement Schedule II - Valuation and Qualifying Accounts (collectively, the consolidated financial statements). In our opinion, the consolidated financial statements present fairly, in all material respects, the financial position of the Company as of December 31, 2025 and 2024, and the results of its operations and its cash flows for each of the years in the three-year period ended December 31, 2025, in conformity with U.S. generally accepted accounting principles.

*Basis for Opinion*

These consolidated financial statements are the responsibility of the Company's management. Our responsibility is to express an opinion on these consolidated financial statements based on our audits. We are a public accounting firm registered with the Public Company Accounting Oversight Board (United States) (PCAOB) and are required to be independent with respect to the Company in accordance with the U.S. federal securities laws and the applicable rules and regulations of the Securities and Exchange Commission and the PCAOB.

We conducted our audits in accordance with the standards of the PCAOB and in accordance with auditing standards generally accepted in the United States of America. Those standards require that we plan and perform the audit to obtain reasonable assurance about whether the consolidated financial statements are free of material misstatement, whether due to error or fraud. The Company is not required to have, nor were we engaged to perform, an audit of its internal control over financial reporting. As part of our audits, we are required to obtain an understanding of internal control over financial reporting but not for the purpose of expressing an opinion on the effectiveness of the Company's internal control over financial reporting. Accordingly, we express no such opinion.

Our audits included performing procedures to assess the risks of material misstatement of the consolidated financial statements, whether due to error or fraud, and performing procedures that respond to those risks. Such procedures included examining, on a test basis, evidence regarding the amounts and disclosures in the consolidated financial statements. Our audits also included evaluating the accounting principles used and significant estimates made by management, as well as evaluating the overall presentation of the consolidated financial statements. We believe that our audits provide a reasonable basis for our opinion.

*Critical Audit Matter*

The critical audit matter communicated below is a matter arising from the current period audit of the consolidated financial statements that was communicated or required to be communicated to the audit committee and that: (1) relates to accounts or disclosures that are material to the consolidated financial statements and (2) involved our especially challenging, subjective, or complex judgments. The communication of a critical audit matter does not alter in any way our opinion on the consolidated financial statements, taken as a whole, and we are not, by communicating the critical audit matter below, providing a separate opinion on the critical audit matter or on the accounts or disclosures to which it relates.

*Evaluation of regulatory assets and liabilities*

As discussed in Notes 1, 13, and 17 to the consolidated financial statements, the Company accounts for their regulated operations in accordance with Financial Accounting Standards Board Accounting Standard Codification Topic 980, Regulated Operations (ASC Topic 980). Pursuant to the requirements of ASC Topic 980, the financial statements of a rate-regulated enterprise reflect the actions of regulators. The Company capitalizes, as regulatory assets, incurred and accrued costs that are probable of recovery in future electric rates. In addition, obligations to refund previously collected revenue or to spend revenue collected from customers on future costs are recorded as regulatory liabilities. The Company is subject to comprehensive federal, state and local regulation and legislation, including regulations promulgated by the Public Utility Commission of Texas.

Table of Contents

We have identified the evaluation of regulatory assets and liabilities as a critical audit matter. This was due to the extent of audit effort required in the evaluation of regulatory assets and liabilities.

The following are the primary procedures we performed to address this critical audit matter. We evaluated the design and tested the operating effectiveness of certain internal controls over the Company's regulatory accounting process, including controls related to the Company's application of ASC Topic 980 and the Company's calculation and review of regulatory assets and liabilities. We selected regulatory assets and liabilities and assessed the Company's application of ASC Topic 980 by evaluating the underlying orders, statutes, rulings, memorandums, filings or publications issued by the Public Utility Commission of Texas. We selected a sample of the regulatory assets and liabilities activity and using the methodologies approved by the Public Utility Commission of Texas, recalculated the activity and agreed the data used in the calculations to the Company's underlying books and records. We compared the amounts calculated by the Company to the amounts recorded in the consolidated financial statements.

/s/ KPMG LLP

We have served as the Company's auditor since 2013.

Boston, Massachusetts
February 27, 2026

Table of Contents

**TXNM ENERGY, INC. AND SUBSIDIARIES**
**CONSOLIDATED STATEMENTS OF EARNINGS**

| | Year Ended December 31, | | |
|---|---|---|---|
| | **2025** | **2024** | **2023** |
| | (In thousands, except per share amounts) | | |
| **Electric Operating Revenues** | $ 2,165,606 | $ 1,971,199 | $ 1,939,198 |
| **Operating Expenses:** | | | |
| Cost of energy | 716,005 | 583,984 | 802,261 |
| Administrative and general | 274,453 | 247,116 | 227,900 |
| Energy production costs | 98,371 | 93,748 | 91,610 |
| Regulatory disallowances | (731) | 8,980 | 71,923 |
| Depreciation and amortization | 425,641 | 384,925 | 319,503 |
| Transmission and distribution costs | 100,794 | 98,380 | 98,721 |
| Taxes other than income taxes | 109,894 | 100,580 | 95,940 |
| Total operating expenses | 1,724,427 | 1,517,713 | 1,707,858 |
| Operating income | 441,179 | 453,486 | 231,340 |
| **Other Income and Deductions:** | | | |
| Interest income | 20,065 | 23,537 | 21,963 |
| Gains on investment securities | 34,750 | 26,851 | 19,246 |
| Other income | 29,087 | 28,621 | 24,204 |
| Other (deductions) | (73,546) | (24,189) | (15,869) |
| Net other income and (deductions) | 10,356 | 54,820 | 49,544 |
| **Interest Charges** | 271,522 | 228,066 | 190,355 |
| **Earnings before Income Taxes** | 180,013 | 280,240 | 90,529 |
| **Income Taxes (Benefits)** | 10,187 | 21,518 | (16,350) |
| **Net Earnings** | 169,826 | 258,722 | 106,879 |
| **(Earnings) Attributable to Valencia Non-controlling Interest** | (17,936) | (16,040) | (18,533) |
| **Preferred Stock Dividend Requirements of Subsidiary** | (528) | (528) | (528) |
| **Net Earnings Attributable to TXNM** | $ 151,362 | $ 242,154 | $ 87,818 |
| **Net Earnings Attributable to TXNM per Common Share:** | | | |
| Basic | $ 1.49 | $ 2.67 | $ 1.02 |
| Diluted | $ 1.48 | $ 2.67 | $ 1.02 |

The accompanying notes, as they relate to TXNM, are an integral part of these consolidated financial statements.

Table of Contents

**TXNM ENERGY, INC. AND SUBSIDIARIES**
**CONSOLIDATED STATEMENTS OF COMPREHENSIVE INCOME**

| | Year Ended December 31, | | |
|---|---|---|---|
| | **2025** | **2024** | **2023** |
| | | (In thousands) | |
| **Net Earnings** | $ 169,826 | $ 258,722 | $ 106,879 |
| **Other Comprehensive Income:** | | | |
| **Unrealized Gains on Available-for-Sale Debt Securities:** | | | |
| Net increase (decrease) in unrealized holding gains arising during the period, net of income tax (expense) benefit of $(201), $225, and $(2,928) | 590 | (660) | 8,601 |
| Reclassification adjustment for (gains) included in net earnings, net of income tax expense of $199, $3,330, and $1,828 | (586) | (9,778) | (5,371) |
| **Pension Liability Adjustment:** | | | |
| Experience gains (losses), net of income tax (expense) benefit of $(701), $815, and $(353) | 2,059 | (2,395) | 1,036 |
| Reclassification adjustment for amortization of experience losses recognized as net periodic benefit cost, net of income tax (benefit) of $(16,323), $(1,236), and $(1,212) | 47,942 | 3,630 | 3,564 |
| **Fair Value Adjustment for Cash Flow Hedges:** | | | |
| Change in fair market value, net of income tax (expense) of $379, $3,876, and $3,933 | (1,113) | (11,384) | (11,550) |
| Reclassification adjustment for (gains) losses included in net earnings, net of income tax expense (benefit) of $0, $(2,629), and $(2,359) | — | 7,719 | 6,928 |
| **Total Other Comprehensive Income (Loss)** | 48,892 | (12,868) | 3,208 |
| **Comprehensive Income** | 218,718 | 245,854 | 110,087 |
| **Comprehensive (Income) Attributable to Valencia Non-controlling Interest** | (17,936) | (16,040) | (18,533) |
| **Preferred Stock Dividend Requirements of Subsidiary** | (528) | (528) | (528) |
| **Comprehensive Income Attributable to TXNM** | $ 200,254 | $ 229,286 | $ 91,026 |

The accompanying notes, as they relate to TXNM, are an integral part of these consolidated financial statements.

Table of Contents

**TXNM ENERGY, INC. AND SUBSIDIARIES**
**CONSOLIDATED STATEMENTS OF CASH FLOWS**

| | Year Ended December 31, | | |
|---|---|---|---|
| | **2025** | **2024** | **2023** |
| | | (In thousands) | |
| **Cash Flows From Operating Activities:** | | | |
| Net earnings | $ 169,826 | $ 258,722 | $ 106,879 |
| Adjustments to reconcile net earnings to net cash flows from operating activities: | | | |
| Depreciation and amortization | 483,378 | 423,010 | 353,692 |
| Deferred income tax expense (benefit) | 8,475 | 43,050 | (13,509) |
| (Gain) on sale of NMRD | — | (4,449) | — |
| Pension settlement charge | 58,768 | — | — |
| (Gains) losses on investment securities | (34,750) | (26,851) | (19,246) |
| Stock based compensation expense | 8,719 | 9,480 | 7,190 |
| Regulatory disallowances | (731) | 8,980 | 71,923 |
| Allowance for equity funds used during construction | (18,598) | (17,887) | (14,978) |
| Other, net | 2,957 | 4,165 | 804 |
| Changes in certain assets and liabilities: | | | |
| Accounts receivable and unbilled revenues | (25,042) | (13,349) | 53,229 |
| Materials, supplies, and fuel stock | (14,455) | (33,804) | (31,301) |
| Other current assets | (12,431) | 31,967 | (52,225) |
| Other assets | (50,677) | (83,541) | (25,820) |
| Accounts payable | 18,309 | 10,021 | (33,536) |
| Accrued interest and taxes | 18,621 | 5,114 | 17,526 |
| Other current liabilities | (17,697) | (106,374) | 125,580 |
| Other liabilities | (10,183) | (94) | 4,963 |
| Net cash flows from operating activities | 584,489 | 508,160 | 551,171 |
| **Cash Flows From Investing Activities:** | | | |
| Additions to utility and non-utility plant | (1,195,922) | (1,247,041) | (1,075,812) |
| Proceeds from sale of plant assets (Note 8) | — | 2,840 | 32,654 |
| Proceeds from sales of investment securities | 693,278 | 707,338 | 574,199 |
| Purchases of investment securities | (714,393) | (756,805) | (593,241) |
| Proceeds from sale of NMRD | — | 116,936 | — |
| Investments in NMRD | — | (12,550) | (26,250) |
| Other, net | (109) | 14,910 | 44 |
| Net cash flows used in investing activities | (1,217,146) | (1,174,372) | (1,088,406) |

The accompanying notes, as they relate to TXNM, are an integral part of these consolidated financial statements.

Table of Contents

**TXNM ENERGY, INC. AND SUBSIDIARIES**
**CONSOLIDATED STATEMENTS OF CASH FLOWS**

| | Year Ended December 31, | | |
|---|---|---|---|
| | **2025** | **2024** | **2023** |
| | | (In thousands) | |
| **Cash Flows From Financing Activities:** | | | |
| Revolving credit facilities borrowings | $ 2,499,800 | $ 2,892,200 | $ 2,358,900 |
| Revolving credit facilities repayments | (2,927,700) | (2,544,800) | (2,329,000) |
| Long-term borrowings | 3,693,600 | 1,233,000 | 1,358,096 |
| Repayment of long-term debt | (3,190,507) | (819,529) | (910,000) |
| Issuance of common stock | 842,739 | 98,601 | 198,177 |
| Awards of common stock | (11,972) | (8,460) | (9,646) |
| Dividends paid | (163,373) | (140,339) | (126,705) |
| Valencia's transactions with its owner | (20,848) | (19,098) | (21,569) |
| Transmission interconnection and security deposit arrangements | 57,400 | 92,272 | 49,807 |
| Refunds paid under transmission interconnection and security deposit arrangements | (111,779) | (79,011) | (21,124) |
| Debt issuance costs and other, net | (24,835) | (20,482) | (9,836) |
| Net cash flows from financing activities | 642,525 | 684,354 | 537,100 |
| | | | |
| **Change in Cash, Cash Equivalents, and Restricted Cash** | 9,868 | 18,142 | (135) |
| **Cash, Cash Equivalents, and Restricted Cash at Beginning of Year** | 22,085 | 3,943 | 4,078 |
| **Cash, Cash Equivalents, and Restricted Cash at End of Year** | $ 31,953 | $ 22,085 | $ 3,943 |
| | | | |
| **Restricted Cash Included in Other Current Assets and Other Deferred Charges on Consolidated Balance Sheets:** | | | |
| At beginning of period | $ 17,587 | $ 1,728 | $ — |
| At end of period | $ 13,697 | $ 17,587 | $ 1,728 |
| | | | |
| **Supplemental Cash Flow Disclosures:** | | | |
| Interest paid, net of amounts capitalized | $ 234,160 | $ 207,972 | $ 155,273 |
| Income taxes paid (refunded), net | $ 2,350 | $ (998) | $ 1,505 |
| | | | |
| **Supplemental schedule of noncash investing and financing activities:** | | | |
| (Increase) decrease in accrued plant additions | $ (20,285) | $ 10,728 | $ (23,002) |

The accompanying notes, as they relate to TXNM, are an integral part of these consolidated financial statements.

Table of Contents

**TXNM ENERGY, INC. AND SUBSIDIARIES**
**CONSOLIDATED BALANCE SHEETS**

| | December 31, | |
|---|---|---|
| | 2025 | 2024 |
| | (In thousands) | |
| **ASSETS** | | |
| **Current Assets:** | | |
| Cash and cash equivalents | $ 18,256 | $ 4,498 |
| Accounts receivable, net of allowance for credit losses of $1,394 and $1,398 | 151,804 | 130,351 |
| Unbilled revenues | 68,214 | 69,176 |
| Other receivables | 53,875 | 37,236 |
| Materials, supplies, and fuel stock | 181,316 | 166,861 |
| Regulatory assets | 41,785 | 41,492 |
| Prepaid assets | 28,946 | 25,452 |
| Income taxes receivable | 8,322 | 7,684 |
| Other current assets | 12,144 | 16,086 |
| Total current assets | 564,662 | 498,836 |
| **Other Property and Investments:** | | |
| Investment securities | 505,655 | 475,524 |
| Other investments | 302 | 259 |
| Non-utility property, including financing leases | 40,729 | 28,832 |
| Total other property and investments | 546,686 | 504,615 |
| **Utility Plant:** | | |
| Plant in service and plant held for future use | 11,592,121 | 10,697,774 |
| Less accumulated depreciation and amortization | 3,010,588 | 2,829,296 |
| | 8,581,533 | 7,868,478 |
| Construction work in progress | 653,206 | 495,976 |
| Nuclear fuel, net of accumulated amortization of $27,953 and $28,245 | 76,696 | 72,554 |
| Net utility plant | 9,311,435 | 8,437,008 |
| **Deferred Charges and Other Assets:** | | |
| Regulatory assets | 939,249 | 962,003 |
| Goodwill | 278,297 | 278,297 |
| Operating lease right-of-use assets, net of accumulated amortization | 108,517 | 272,894 |
| Other deferred charges | 310,439 | 258,080 |
| Total deferred charges and other assets | 1,636,502 | 1,771,274 |
| | $ 12,059,285 | $ 11,211,733 |

The accompanying notes, as they relate to TXNM, are an integral part of these consolidated financial statements.

Table of Contents

**TXNM ENERGY, INC. AND SUBSIDIARIES**
**CONSOLIDATED BALANCE SHEETS**

| | December 31, | |
|---|---|---|
| | **2025** | **2024** |
| | (In thousands, except share information) | |
| **LIABILITIES AND STOCKHOLDERS' EQUITY** | | |
| **Current Liabilities:** | | |
| Short-term debt | $ 181,400 | $ 609,300 |
| Current installments of long-term debt (includes $7,303 and $6,907 related to ETBC I) | 302,538 | 611,603 |
| Accounts payable | 243,062 | 204,468 |
| Customer deposits | 6,893 | 6,533 |
| Accrued interest and taxes | 124,014 | 104,756 |
| Regulatory liabilities | 11,022 | 34,173 |
| Operating lease liabilities | 8,969 | 14,293 |
| Dividends declared | 46,151 | 36,889 |
| Transmission interconnection arrangement liabilities | 15,878 | 68,085 |
| Other current liabilities | 77,610 | 84,998 |
| Total current liabilities | 1,017,537 | 1,775,098 |
| **Long-term Debt, net of Unamortized Premiums, Discounts, and Debt Issuance Costs (includes $324,531 and $331,726 related to ETBC I)** | 5,116,026 | 4,311,765 |
| **Deferred Credits and Other Liabilities:** | | |
| Accumulated deferred income taxes | 961,230 | 899,392 |
| Regulatory liabilities | 757,319 | 748,738 |
| Asset retirement obligations | 255,097 | 244,618 |
| Accrued pension liability and postretirement benefit cost | 6,736 | 23,065 |
| Operating lease liabilities | 96,735 | 255,376 |
| Other deferred credits | 389,070 | 358,867 |
| Total deferred credits and other liabilities | 2,466,187 | 2,530,056 |
| Total liabilities | 8,599,750 | 8,616,919 |
| **Commitments and Contingencies (See Note 16)** | | |
| **Cumulative Preferred Stock of Subsidiary** | | |
| without mandatory redemption requirements ($100 stated value; 10,000,000 shares authorized; issued and outstanding 115,293 shares) | 11,529 | 11,529 |
| **Equity:** | | |
| TXNM common stockholders' equity: | | |
| Common stock (no par value; 200,000,000 shares authorized; issued and outstanding 108,921,356 and 92,659,335 shares) | 2,563,930 | 1,724,444 |
| Accumulated other comprehensive income (loss), net of income taxes | (26,816) | (75,708) |
| Retained earnings | 866,904 | 887,649 |
| Total TXNM common stockholders' equity | 3,404,018 | 2,536,385 |
| Non-controlling interest in Valencia | 43,988 | 46,900 |
| Total equity | 3,448,006 | 2,583,285 |
| | $ 12,059,285 | $ 11,211,733 |

The accompanying notes, as they relate to TXNM, are an integral part of these consolidated financial statements.

Table of Contents

**TXNM ENERGY, INC. AND SUBSIDIARIES**
**CONSOLIDATED STATEMENTS OF CHANGES IN EQUITY**

| | Attributable to TXNM | | | | | |
|---|---|---|---|---|---|---|
| | Common Stock | AOCI | Retained Earnings | Total TXNM Common Stockholder's Equity | Non-controlling Interest in Valencia | Total Equity |
| | (In thousands) | | | | | |
| **Balance at December 31, 2022** | $ 1,429,102 | $ (66,048) | $ 828,878 | $ 2,191,932 | $ 52,994 | $ 2,244,926 |
| Net earnings before subsidiary preferred stock dividends | — | — | 88,346 | 88,346 | 18,533 | 106,879 |
| Total other comprehensive income | — | 3,218 | — | 3,218 | — | 3,218 |
| Subsidiary preferred stockdividends | — | — | (528) | (528) | — | (528) |
| Dividends declared on common stock | — | — | (129,586) | (129,586) | — | (129,586) |
| Awards of common stock | (9,646) | — | — | (9,646) | — | (9,646) |
| Issuance of common stock | 198,177 | | | 198,177 | | 198,177 |
| Stockbased compensation expense | 7,190 | — | — | 7,190 | — | 7,190 |
| Valencia's transactions with its owner | — | — | — | — | (21,539) | (21,539) |
| **Balance at December 31, 2023** | 1,624,823 | (62,830) | 787,110 | 2,349,093 | 49,988 | 2,399,081 |
| Net earnings before subsidiary preferred stock dividends | — | — | 242,682 | 242,682 | 16,040 | 258,722 |
| Total other comprehensive income (loss) | — | (12,868) | — | (12,868) | — | (12,868) |
| Subsidiary preferred stockdividends | — | — | (528) | (528) | — | (528) |
| Dividends declared on common stock | — | — | (141,615) | (141,615) | — | (141,615) |
| Awards of common stock | (8,440) | — | — | (8,440) | — | (8,440) |
| Issuance of common stock | 98,601 | — | — | 98,601 | — | 98,601 |
| Stockbased compensation expense | 9,480 | — | — | 9,480 | — | 9,480 |
| Valencia's transactions with its owner | — | — | — | — | (19,038) | (19,038) |
| **Balance at December 31, 2024** | 1,724,444 | (75,698) | 887,649 | 2,536,395 | 46,990 | 2,583,285 |
| Net earnings before subsidiary preferred stock dividends | — | — | 151,890 | 151,890 | 17,936 | 169,826 |
| Total other comprehensive income | — | 48,892 | — | 48,892 | — | 48,892 |
| Subsidiary preferred stockdividends | — | — | (528) | (528) | — | (528) |
| Dividends declared on common stock | — | — | (172,107) | (172,107) | — | (172,107) |
| Awards of common stock | (11,972) | — | — | (11,972) | — | (11,972) |
| Issuance of common stock | 842,739 | — | — | 842,739 | — | 842,739 |
| Stockbased compensation expense | 8,719 | — | — | 8,719 | — | 8,719 |
| Valencia's transactions with its owner | — | — | — | — | (20,888) | (20,888) |
| **Balance at December 31, 2025** | $ 2,563,930 | $ (26,806) | $ 866,904 | $ 3,404,028 | $ 43,988 | $ 3,448,016 |

The accompanying notes, as they relate to TXNM, are an integral part of these consolidated financial statements.

Table of Contents

**PUBLIC SERVICE COMPANY OF NEW MEXICO AND SUBSIDIARIES**
**A WHOLLY-OWNED SUBSIDIARY OF TXNM ENERGY, INC.**
**CONSOLIDATED STATEMENTS OF EARNINGS**

| | Year Ended December 31, | | |
|---|---|---|---|
| | **2025** | **2024** | **2023** |
| | | (In thousands) | |
| **Electric Operating Revenues** | $ 1,484,290 | $ 1,379,088 | $ 1,403,948 |
| **Operating Expenses:** | | | |
| Cost of energy | 549,156 | 434,918 | 663,614 |
| Administrative and general | 240,852 | 226,560 | 206,650 |
| Energy production costs | 98,371 | 93,748 | 91,610 |
| Regulatory disallowances | (731) | 8,980 | 70,750 |
| Depreciation and amortization | 244,205 | 221,780 | 177,633 |
| Transmission and distribution costs | 63,349 | 61,302 | 61,725 |
| Taxes other than income taxes | 56,485 | 49,807 | 48,790 |
| Total operating expenses | 1,251,687 | 1,097,095 | 1,320,772 |
| Operating income | 232,603 | 281,993 | 83,176 |
| **Other Income and Deductions:** | | | |
| Interest income | 17,487 | 23,454 | 21,355 |
| Gains on investment securities | 34,750 | 26,851 | 19,246 |
| Other income | 14,533 | 15,329 | 11,638 |
| Other (deductions) | (68,796) | (4,140) | (10,881) |
| Net other income and (deductions) | (2,026) | 61,494 | 41,358 |
| **Interest Charges** | 129,478 | 106,018 | 86,574 |
| **Earnings before Income Taxes** | 101,099 | 237,469 | 37,960 |
| **Income Taxes (Benefits)** | (4,442) | 29,217 | (16,758) |
| **Net Earnings** | 105,541 | 208,252 | 54,718 |
| **(Earnings) Attributable to Valencia Non-controlling Interest** | (17,936) | (16,040) | (18,533) |
| **Net Earnings Attributable to PNM** | 87,605 | 192,212 | 36,185 |
| **Preferred Stock Dividends Requirements** | (528) | (528) | (528) |
| **Net Earnings Available for PNM Common Stock** | $ 87,077 | $ 191,684 | $ 35,657 |

The accompanying notes, as they relate to PNM, are an integral part of these consolidated financial statements.

Table of Contents

**PUBLIC SERVICE COMPANY OF NEW MEXICO AND SUBSIDIARIES**
**A WHOLLY-OWNED SUBSIDIARY OF TXNM ENERGY, INC.**
**CONSOLIDATED STATEMENTS OF COMPREHENSIVE INCOME**

| | Year Ended December 31, | | |
|---|---|---|---|
| | **2025** | **2024** | **2023** |
| | | (In thousands) | |
| **Net Earnings** | $ 105,541 | $ 208,252 | $ 54,718 |
| **Other Comprehensive Income:** | | | |
| **Unrealized Gains on Available-for-Sale Debt Securities:** | | | |
| Net increase (decrease) in unrealized holding gains (losses) arising during the period, net of income tax (expense) benefit of $(201), $225, and $(2,928) | 590 | (660) | 8,601 |
| Reclassification adjustment for (gains) included in net earnings, net of income tax expense of $199, $3,330, and $1,828 | (586) | (9,778) | (5,371) |
| **Pension Liability Adjustment:** | | | |
| Experience gains (losses), net of income tax (expense) benefit of $(701), $815, and $(353) | 2,059 | (2,395) | 1,036 |
| Reclassification adjustment for amortization of experience losses recognized as net periodic benefit cost, net of income tax (benefit) of $(16,323), $(1,236), and $(1,212) | 47,942 | 3,630 | 3,564 |
| **Total Other Comprehensive Income (Loss)** | 50,005 | (9,203) | 7,830 |
| **Comprehensive Income** | 155,546 | 199,049 | 62,548 |
| **Comprehensive (Income) Attributable to Valencia Non-controlling Interest** | (17,936) | (16,040) | (18,533) |
| **Comprehensive Income Attributable to PNM** | $ 137,610 | $ 183,009 | $ 44,015 |

The accompanying notes, as they relate to PNM, are an integral part of these consolidated financial statements.

Table of Contents

**PUBLIC SERVICE COMPANY OF NEW MEXICO AND SUBSIDIARIES**
**A WHOLLY-OWNED SUBSIDIARY OF TXNM ENERGY, INC.**
**CONSOLIDATED STATEMENTS OF CASH FLOWS**

| | Year Ended December 31, | | |
|---|---|---|---|
| | **2025** | **2024** | **2023** |
| | (In thousands) | | |
| **Cash Flows From Operating Activities:** | | | |
| Net earnings | $ 105,541 | $ 208,252 | $ 54,718 |
| Adjustments to reconcile net earnings to net cash flows from operating activities: | | | |
| Depreciation and amortization | 280,740 | 250,042 | 202,885 |
| Deferred income tax expense (benefit) | 5,716 | 41,903 | (21,972) |
| Pension settlement charge | 58,768 | — | — |
| (Gains) losses on investment securities | (34,750) | (26,851) | (19,246) |
| Regulatory disallowances | (731) | 8,980 | 70,750 |
| Allowance for equity funds used during construction | (9,707) | (13,043) | (9,832) |
| Other, net | 3,650 | 4,459 | 3,485 |
| Changes in certain assets and liabilities: | | | |
| Accounts receivable and unbilled revenues | (20,070) | (11,295) | 51,314 |
| Materials, supplies, and fuel stock | (3,153) | (25,915) | (25,681) |
| Other current assets | 14,204 | 19,943 | (54,934) |
| Other assets | (31,637) | (33,013) | (20,956) |
| Accounts payable | 11,605 | 8,135 | (30,423) |
| Accrued interest and taxes | 12,466 | (3,041) | 16,091 |
| Other current liabilities | (26,643) | (99,353) | 123,048 |
| Other liabilities | (9,853) | (7,691) | 4,588 |
| Net cash flows from operating activities | 356,146 | 321,512 | 343,835 |
| **Cash Flows From Investing Activities:** | | | |
| Utility plant additions | (585,195) | (682,412) | (565,080) |
| Proceeds from sale of plant assets (Note 8) | — | 2,840 | 32,654 |
| Proceeds from sales of investment securities | 693,278 | 707,338 | 574,199 |
| Purchases of investment securities | (714,393) | (756,805) | (593,241) |
| Other, net | (118) | 14,885 | 7 |
| Net cash flows used in investing activities | (606,428) | (714,154) | (551,461) |

The accompanying notes, as they relate to PNM, are an integral part of these consolidated financial statements.

Table of Contents

**PUBLIC SERVICE COMPANY OF NEW MEXICO AND SUBSIDIARIES**
**A WHOLLY-OWNED SUBSIDIARY OF TXNM ENERGY, INC.**
**CONSOLIDATED STATEMENTS OF CASH FLOWS**

| | Year ended December 31, | | |
|---|---|---|---|
| | **2025** | **2024** | **2023** |
| | | (In thousands) | |
| **Cash Flows From Financing Activities:** | | | |
| Revolving credit facilities borrowings | $ 1,118,300 | $ 1,433,200 | $ 1,114,300 |
| Revolving credit facilities repayments | (1,303,300) | (1,206,900) | (1,162,700) |
| Long-term borrowings | 965,000 | 398,000 | 673,096 |
| Repayment of long-term debt | (560,907) | (200,529) | (410,000) |
| Equity contribution from parent | 123,300 | 55,000 | — |
| Dividends paid | (528) | (51,529) | (528) |
| Valencia's transactions with its owner | (20,848) | (19,098) | (21,569) |
| Transmission interconnection and security deposit arrangements | 20,120 | 81,022 | 38,807 |
| Refunds paid under transmission interconnection and security deposit arrangements | (90,779) | (74,161) | (17,624) |
| Debt issuance costs and other, net | (6,645) | (4,664) | (6,555) |
| Net cash flows from financing activities | 243,713 | 410,341 | 207,227 |
| **Change in Cash, Cash Equivalents, and Restricted Cash** | (6,569) | 17,699 | (399) |
| **Cash, Cash Equivalents, and Restricted Cash at Beginning of Year** | 20,285 | 2,586 | 2,985 |
| **Cash, Cash Equivalents, and Restricted Cash at End of Year** | $ 13,716 | $ 20,285 | $ 2,586 |
| **Restricted Cash Included in Other Current Assets and Other Deferred Charges on Consolidated Balance Sheets:** | | | |
| At beginning of period | $ 17,587 | $ 1,728 | $ — |
| At end of period | $ 13,697 | $ 17,587 | $ 1,728 |
| **Supplemental Cash Flow Disclosures:** | | | |
| Interest paid, net of amounts capitalized | $ 111,691 | $ 85,100 | $ 66,456 |
| Income taxes paid (refunded), net | $ (13,336) | $ (4,058) | $ (5,338) |
| **Supplemental schedule of noncash investing activities:** | | | |
| (Increase) decrease in accrued plant additions | $ (14,923) | $ 25,955 | $ (8,604) |

The accompanying notes, as they relate to PNM, are an integral part of these consolidated financial statements.

Table of Contents

**PUBLIC SERVICE COMPANY OF NEW MEXICO AND SUBSIDIARIES**
**A WHOLLY-OWNED SUBSIDIARY OF TXNM ENERGY, INC.**
**CONSOLIDATED BALANCE SHEETS**

| | December 31, | |
|---|---|---|
| | 2025 | 2024 |
| | (In thousands) | |
| **ASSETS** | | |
| **Current Assets:** | | |
| Cash and cash equivalents | $ 19 | $ 2,698 |
| Accounts receivable, net of allowance for credit losses of $1,394 and $1,398 | 115,910 | 95,932 |
| Unbilled revenues | 48,524 | 52,983 |
| Other receivables | 33,422 | 24,174 |
| Affiliate receivables | 17,360 | 9,241 |
| Materials, supplies, and fuel stock | 145,663 | 142,510 |
| Regulatory assets | 8,499 | 36,224 |
| Prepaid assets | 18,502 | 14,746 |
| Income taxes receivable | 13,132 | 16,309 |
| Other current assets | 12,109 | 16,091 |
| Total current assets | 413,140 | 410,908 |
| **Other Property and Investments:** | | |
| Investment securities | 505,655 | 475,524 |
| Other investments | 302 | 184 |
| Non-utility property, including financing leases | 17,572 | 13,647 |
| Total other property and investments | 523,529 | 489,355 |
| **Utility Plant:** | | |
| Plant in service and plant held for future use | 7,260,670 | 6,797,493 |
| Less accumulated depreciation and amortization | 2,201,687 | 2,079,363 |
| | 5,058,983 | 4,718,130 |
| Construction work in progress | 371,119 | 328,403 |
| Nuclear fuel, net of accumulated amortization of $27,953 and $28,245 | 76,696 | 72,554 |
| Net utility plant | 5,506,798 | 5,119,087 |
| **Deferred Charges and Other Assets:** | | |
| Regulatory assets | 832,791 | 857,310 |
| Goodwill | 51,632 | 51,632 |
| Operating lease right-of-use assets, net of accumulated amortization | 107,986 | 271,433 |
| Other deferred charges | 252,256 | 207,554 |
| Total deferred charges and other assets | 1,244,665 | 1,387,929 |
| | $ 7,688,132 | $ 7,407,279 |

The accompanying notes, as they relate to PNM, are an integral part of these consolidated financial statements.

Table of Contents

**PUBLIC SERVICE COMPANY OF NEW MEXICO AND SUBSIDIARIES**
**A WHOLLY-OWNED SUBSIDIARY OF TXNM ENERGY, INC.**
**CONSOLIDATED BALANCE SHEETS**

| | December 31, | |
|---|---|---|
| | 2025 | 2024 |
| | (In thousands, except share information) | |
| **LIABILITIES AND STOCKHOLDER'S EQUITY** | | |
| **Current Liabilities:** | | |
| Short-term debt | $ 178,800 | $ 363,800 |
| Current installments of long-term debt (includes $7,303 and $6,907 related to ETBC I) | 302,538 | 560,637 |
| Accounts payable | 150,411 | 123,883 |
| Affiliate payables | 18,366 | 15,695 |
| Customer deposits | 6,893 | 6,533 |
| Accrued interest and taxes | 56,211 | 46,923 |
| Regulatory liabilities | 8,430 | 33,571 |
| Operating lease liabilities | 8,913 | 13,542 |
| Dividends declared | 132 | 132 |
| Transmission interconnection arrangement liabilities | 15,878 | 68,085 |
| Other current liabilities | 41,737 | 50,099 |
| Total current liabilities | 788,309 | 1,282,900 |
| **Long-term Debt, net of Unamortized Premiums, Discounts, and Debt Issuance Costs (includes $324,531 and $331,726 related to ETBC I)** | 2,559,359 | 1,898,955 |
| **Deferred Credits and Other Liabilities:** | | |
| Accumulated deferred income taxes | 813,528 | 756,218 |
| Regulatory liabilities | 488,406 | 518,701 |
| Asset retirement obligations | 254,353 | 243,663 |
| Accrued pension liability and postretirement benefit cost | 6,736 | 22,067 |
| Operating lease liabilities | 96,246 | 254,702 |
| Other deferred credits | 227,998 | 234,346 |
| Total deferred credits and liabilities | 1,887,267 | 2,029,697 |
| Total liabilities | 5,234,935 | 5,211,552 |
| **Commitments and Contingencies (See Note 16)** | | |
| **Cumulative Preferred Stock** | | |
| without mandatory redemption requirements ($100 stated value; 10,000,000 shares authorized; issued and outstanding 115,293 shares) | 11,529 | 11,529 |
| **Equity:** | | |
| PNM common stockholder's equity: | | |
| Common stock (no par value; 40,000,000 shares authorized; issued and outstanding 39,117,799 shares) | 1,726,218 | 1,602,918 |
| Accumulated other comprehensive income (loss), net of income taxes | (25,703) | (75,708) |
| Retained earnings | 697,165 | 610,088 |
| Total PNM common stockholder's equity | 2,397,680 | 2,137,298 |
| Non-controlling interest in Valencia | 43,988 | 46,900 |
| Total equity | 2,441,668 | 2,184,198 |
| | $ 7,688,132 | $ 7,407,279 |

The accompanying notes, as they relate to PNM, are an integral part of these consolidated financial statements.

Table of Contents

**PUBLIC SERVICE COMPANY OF NEW MEXICO AND SUBSIDIARIES**
**A WHOLLY-OWNED SUBSIDIARY OF TXNM ENERGY, INC.**
**CONSOLIDATED STATEMENTS OF CHANGES IN EQUITY**

| | Attributable to PNM | | | | | |
|---|---|---|---|---|---|---|
| | Common Stock | AOCI | Retained Earnings | Total PNM Common Stockholder's Equity | Non-controlling Interest in Valencia | Total Equity |
| | (In thousands) | | | | | |
| **Balance at December 31, 2022** | $ 1,547,918 | $ (74,335) | $ 433,747 | $ 1,907,330 | $ 52,994 | $ 1,960,324 |
| Net earnings | — | — | 36,185 | 36,185 | 18,533 | 54,718 |
| Total other comprehensive income | — | 7,830 | — | 7,830 | — | 7,830 |
| Dividends declared on preferred stock | — | — | (528) | (528) | — | (528) |
| Valencia's transactions with its owner | — | — | — | — | (21,569) | (21,569) |
| **Balance at December 31, 2023** | 1,547,918 | (66,505) | 469,404 | 1,950,817 | 49,958 | 2,000,775 |
| Net earnings | — | — | 192,212 | 192,212 | 16,040 | 208,252 |
| Total other comprehensive income (loss) | — | (9,203) | — | (9,203) | — | (9,203) |
| Dividends declared on preferred stock | — | — | (528) | (528) | — | (528) |
| Equity contributions from parent | 55,000 | — | — | 55,000 | — | 55,000 |
| Dividends declared on common stock | — | — | (51,000) | (51,000) | — | (51,000) |
| Valencia's transactions with its owner | — | — | — | — | (19,098) | (19,098) |
| **Balance at December 31, 2024** | 1,602,918 | (75,708) | 610,088 | 2,137,298 | 46,900 | 2,184,198 |
| Net earnings | — | — | 87,605 | 87,605 | 17,936 | 105,541 |
| Total other comprehensive income | — | 50,005 | — | 50,005 | — | 50,005 |
| Dividends declared on preferred stock | — | — | (528) | (528) | — | (528) |
| Equity contribution from parent | 123,300 | — | — | 123,300 | — | 123,300 |
| Valencia's transactions with its owner | — | — | — | — | (20,848) | (20,848) |
| **Balance at December 31, 2025** | $ 1,726,218 | $ (25,703) | $ 697,165 | $ 2,397,680 | $ 43,988 | $ 2,441,668 |

The accompanying notes, as they relate to PNM, are an integral part of these consolidated financial statements.

Table of Contents

**TEXAS-NEW MEXICO POWER COMPANY AND SUBSIDIARIES**
**A WHOLLY-OWNED SUBSIDIARY OF TXNM ENERGY, INC.**
**CONSOLIDATED STATEMENTS OF EARNINGS**

| | Year Ended December 31, | | |
|---|---|---|---|
| | **2025** | **2024** | **2023** |
| | | (In thousands) | |
| **Electric Operating Revenues** | $ 681,316 | $ 592,111 | $ 535,250 |
| **Operating Expenses:** | | | |
| Cost of energy | 166,849 | 149,066 | 138,647 |
| Administrative and general | 57,190 | 54,711 | 53,963 |
| Regulatory disallowances | — | — | 1,173 |
| Depreciation and amortization | 143,942 | 125,915 | 113,142 |
| Transmission and distribution costs | 37,445 | 37,078 | 36,996 |
| Taxes other than income taxes | 47,174 | 44,441 | 41,311 |
| Total operating expenses | 452,600 | 411,211 | 385,232 |
| Operating income | 228,716 | 180,900 | 150,018 |
| **Other Income and Deductions:** | | | |
| Other income | 16,056 | 12,305 | 10,127 |
| Other (deductions) | (1,441) | (3,580) | (1,759) |
| Net other income | 14,615 | 8,725 | 8,368 |
| **Interest Charges** | 86,956 | 58,983 | 46,152 |
| **Earnings before Income Taxes** | 156,375 | 130,642 | 112,234 |
| **Income Taxes** | 32,085 | 27,114 | 17,297 |
| **Net Earnings** | $ 124,290 | $ 103,528 | $ 94,937 |

The accompanying notes, as they relate to TNMP, are an integral part of these consolidated financial statements.

Table of Contents

**TEXAS-NEW MEXICO POWER COMPANY AND SUBSIDIARIES**
**A WHOLLY-OWNED SUBSIDIARY OF TXNM ENERGY, INC.**
**CONSOLIDATED STATEMENTS OF CASH FLOWS**

| | Year Ended December 31, | | |
|---|---|---|---|
| | **2025** | **2024** | **2023** |
| | | (In thousands) | |
| **Cash Flows From Operating Activities:** | | | |
| Net earnings | $ 124,290 | $ 103,528 | $ 94,937 |
| Adjustments to reconcile net earnings to net cash flows from operating activities: | | | |
| Depreciation and amortization | 153,692 | 126,868 | 113,854 |
| Deferred income tax (benefit) | 18,184 | 26,363 | 2,888 |
| Regulatory disallowances | — | — | 1,173 |
| Allowance for equity funds used during construction and other, net | (9,585) | (5,222) | (5,145) |
| Changes in certain assets and liabilities: | | | |
| Accounts receivable and unbilled revenues | (4,972) | (2,053) | 1,916 |
| Materials and supplies | (11,302) | (7,889) | (5,620) |
| Other current assets | (27,666) | 11,063 | 3,650 |
| Other assets | (6,875) | (33,601) | 3,109 |
| Accounts payable | 5,464 | (832) | 171 |
| Accrued interest and taxes | 15,389 | (818) | 2,886 |
| Other current liabilities | 10,623 | (5,355) | (156) |
| Other liabilities | (2,188) | 1,564 | 949 |
| Net cash flows from operating activities | 265,054 | 213,616 | 214,612 |
| **Cash Flows From Investing Activities:** | | | |
| Utility plant additions | (563,127) | (541,604) | (464,436) |
| Net cash flows used in investing activities | (563,127) | (541,604) | (464,436) |

The accompanying notes, as they relate to TNMP, are an integral part of these consolidated financial statements.

Table of Contents

**TEXAS-NEW MEXICO POWER COMPANY AND SUBSIDIARIES**
**A WHOLLY-OWNED SUBSIDIARY OF TXNM ENERGY, INC.**
**CONSOLIDATED STATEMENTS OF CASH FLOWS**

| | Year Ended December 31, | | |
|---|---|---|---|
| | **2025** | **2024** | **2023** |
| | (In thousands) | | |
| **Cash Flow From Financing Activities:** | | | |
| Revolving credit facilities borrowings | $ 454,200 | $ 637,000 | $ 407,600 |
| Revolving credit facilities repayments | (605,800) | (540,500) | (389,200) |
| Long-term borrowings | 2,378,600 | 285,000 | 185,000 |
| Repayment of long-term debt | (2,168,600) | (80,000) | — |
| Transmission interconnection arrangements | 37,280 | 11,250 | 11,000 |
| Refunds paid under transmission interconnection and security deposit arrangements | (21,000) | (4,850) | (3,500) |
| Equity contribution from parent | 250,000 | 24,000 | 40,900 |
| Debt issuance costs and other, net | (11,589) | (3,679) | (1,976) |
| Net cash flows from financing activities | 313,091 | 328,221 | 249,824 |
| **Change in Cash and Cash Equivalents** | 15,018 | 233 | — |
| **Cash and Cash Equivalents at Beginning of Year** | 233 | — | — |
| **Cash and Cash Equivalents at End of Year** | $ 15,251 | $ 233 | $ — |
| **Supplemental Cash Flow Disclosures:** | | | |
| Interest paid, net of amounts capitalized | $ 68,962 | $ 50,956 | $ 41,847 |
| Income taxes paid, net | $ 7,519 | $ 11,021 | $ 16,904 |
| **Supplemental schedule of noncash investing activities:** | | | |
| (Increase) decrease in accrued plant additions | $ 15,136 | $ (16,328) | $ (17,297) |

The accompanying notes, as they relate to TNMP, are an integral part of these consolidated financial statements.

Table of Contents

**TEXAS-NEW MEXICO POWER COMPANY AND SUBSIDIARIES**
**A WHOLLY-OWNED SUBSIDIARY OF TXNM ENERGY, INC.**
**CONSOLIDATED BALANCE SHEETS**

| | December 31, | |
|---|---|---|
| | 2025 | 2024 |
| | (In thousands) | |
| **ASSETS** | | |
| **Current Assets:** | | |
| Cash and cash equivalents | $ 15,251 | $ 233 |
| Accounts receivable | 35,894 | 34,419 |
| Unbilled revenues | 19,690 | 16,193 |
| Other receivables | 22,633 | 15,144 |
| Affiliate receivables | 565 | — |
| Materials and supplies | 35,653 | 24,351 |
| Regulatory assets | 33,286 | 5,268 |
| Other current assets | 5,603 | 4,908 |
| Total current assets | 168,575 | 100,516 |
| **Other Property and Investments:** | | |
| Other investments | — | 75 |
| Non-utility property, including financing leases | 21,153 | 13,137 |
| Total other property and investments | 21,153 | 13,212 |
| **Utility Plant:** | | |
| Plant in service and plant held for future use | 4,065,890 | 3,635,550 |
| Less accumulated depreciation and amortization | 679,035 | 616,741 |
| | 3,386,855 | 3,018,809 |
| Construction work in progress | 254,810 | 165,527 |
| Net utility plant | 3,641,665 | 3,184,336 |
| **Deferred Charges and Other Assets:** | | |
| Regulatory assets | 106,458 | 104,693 |
| Goodwill | 226,665 | 226,665 |
| Operating lease right-of-use assets, net of accumulated amortization | 39 | 923 |
| Other deferred charges | 23,163 | 18,780 |
| Total deferred charges and other assets | 356,325 | 351,061 |
| | $ 4,187,718 | $ 3,649,125 |

The accompanying notes, as they relate to TNMP, are an integral part of these consolidated financial statements.

Table of Contents

**TEXAS-NEW MEXICO POWER COMPANY AND SUBSIDIARIES**
**A WHOLLY-OWNED SUBSIDIARY OF TXNM ENERGY, INC.**
**CONSOLIDATED BALANCE SHEETS**

| | December 31, | |
|---|---|---|
| | **2025** | **2024** |
| | (In thousands, except share information) | |
| **LIABILITIES AND STOCKHOLDER'S EQUITY** | | |
| **Current Liabilities:** | | |
| Short-term debt | $ — | $ 151,600 |
| Accounts payable | 57,444 | 67,116 |
| Affiliate payables | 8,100 | 7,339 |
| Accrued interest and taxes | 72,129 | 56,740 |
| Regulatory liabilities | 2,592 | 602 |
| Operating lease liabilities | 15 | 713 |
| Other current liabilities | 14,618 | 6,964 |
| Total current liabilities | 154,898 | 291,074 |
| **Long-term Debt, net of Unamortized Premiums, Discounts, and Debt Issuance Costs** | 1,672,267 | 1,464,079 |
| **Deferred Credits and Other Liabilities:** | | |
| Accumulated deferred income taxes | 229,375 | 208,107 |
| Regulatory liabilities | 268,913 | 230,037 |
| Asset retirement obligations | 744 | 955 |
| Accrued pension liability and postretirement benefit cost | — | 998 |
| Operating lease liabilities | 24 | 167 |
| Other deferred credits | 122,018 | 88,519 |
| Total deferred credits and other liabilities | 621,074 | 528,783 |
| Total liabilities | 2,448,239 | 2,283,936 |
| **Commitments and Contingencies (See Note 16)** | | |
| **Common Stockholder's Equity:** | | |
| Common stock ($10 par value; 12,000,000 shares authorized; issued and outstanding 6,358 shares) | 64 | 64 |
| Paid-in-capital | 1,120,066 | 870,066 |
| Retained earnings | 619,349 | 495,059 |
| Total common stockholder's equity | 1,739,479 | 1,365,189 |
| | $ 4,187,718 | $ 3,649,125 |

The accompanying notes, as they relate to TNMP, are an integral part of these consolidated financial statements.

Table of Contents

**TEXAS-NEW MEXICO POWER COMPANY AND SUBSIDIARIES**
**A WHOLLY-OWNED SUBSIDIARY OF TXNM ENERGY, INC.**
**CONSOLIDATED STATEMENTS OF CHANGES IN COMMON STOCKHOLDER'S EQUITY**

| | Common Stock | Paid-in Capital | Retained Earnings | Total Common Stockholder's Equity |
|---|---|---|---|---|
| | | (In thousands) | | |
| **Balance at December 31, 2022** | $ 64 | $ 805,166 | $ 296,594 | $ 1,101,824 |
| Net earnings | — | — | 94,937 | 94,937 |
| Equity contribution from parent | — | 40,900 | — | 40,900 |
| **Balance at December 31, 2023** | 64 | 846,066 | 391,531 | 1,237,661 |
| Net earnings | — | — | 103,528 | 103,528 |
| Equity contributions from parent | — | 24,000 | — | 24,000 |
| **Balance at December 31, 2024** | 64 | 870,066 | 495,059 | 1,365,189 |
| Net earnings | — | — | 124,290 | 124,290 |
| Equity contributions from parent | — | 250,000 | — | 250,000 |
| **Balance at December 31, 2025** | $ 64 | $ 1,120,066 | $ 619,349 | $ 1,739,479 |

The accompanying notes, as they relate to TNMP, are an integral part of these consolidated financial statements.

Table of Contents

**TXNM ENERGY, INC. AND SUBSIDIARIES**
**PUBLIC SERVICE COMPANY OF NEW MEXICO AND SUBSIDIARIES**
**TEXAS-NEW MEXICO POWER COMPANY AND SUBSIDIARIES**

**NOTES TO CONSOLIDATED FINANCIAL STATEMENTS**
**December 31, 2025, 2024 and 2023**

## (1) Summary of the Business and Significant Accounting Policies

### Nature of Business

TXNM is an investor-owned holding company with two regulated utilities providing electricity and electric services in New Mexico and Texas. TXNM's primary subsidiaries are PNM and TNMP. PNM is a public utility with regulated operations primarily engaged in the generation, transmission, and distribution of electricity. In 2023, ETBC I, a special purpose entity that is wholly-owned by PNM, was formed for the limited purpose of purchasing, owning, and administering energy transition property, issuing Securitized Bonds, and performing related activities. See Note 7. TNMP is a wholly-owned subsidiary of TNP, which is a holding company that is wholly-owned by TXNM. TNMP provides regulated transmission and distribution services in Texas. TXNM's common stock trades on the New York Stock Exchange under the symbol TXNM.

On May 18, 2025, TXNM, Parent, and Merger Sub, entered into the Merger Agreement, pursuant to which Merger Sub will merge with and into TXNM, with TXNM surviving the Merger as a direct, wholly-owned subsidiary of Parent. Parent and Merger Sub are affiliates of Blackstone Infrastructure. See Note 22.

### Financial Statement Preparation and Presentation

The preparation of financial statements in conformity with GAAP requires management to make estimates and assumptions that affect the reported amounts of assets and liabilities, disclosure of contingent assets and liabilities at the date of the financial statements, and the reported amounts of revenues and expenses during the reporting period. Actual results could ultimately differ from those estimated.

On August 2, 2024, PNM Resources, Inc. ("PNMR") amended its Articles of Incorporation to change its name to TXNM Energy, Inc. ("TXNM") and increased the number of authorized shares of the Company's common stock from 120,000,000 to 200,000,000. The Notes to Consolidated Financial Statements include disclosures for TXNM, PNM, and TNMP. This report uses the term "Company" when discussing matters of common applicability to TXNM, PNM, and TNMP. Discussions regarding only TXNM, PNM, or TNMP are so indicated. Certain amounts in the 2024 and 2023 Consolidated Financial Statements and Notes thereto have been reclassified to conform to the 2025 financial statement presentation.

GAAP defines subsequent events as events or transactions that occur after the balance sheet date but before financial statements are issued or are available to be issued. Based on their nature, magnitude, and timing, certain subsequent events may be required to be reflected at the balance sheet date and/or required to be disclosed in the financial statements. The Company has evaluated subsequent events accordingly.

### Principles of Consolidation

The Consolidated Financial Statements of each of TXNM, PNM, and TNMP include their accounts and those of subsidiaries in which that entity owns a majority voting interest. PNM also consolidates Valencia and ETBC I (Note 10). PNM owns undivided interests in jointly-owned power plants and records its pro-rata share of the assets, liabilities, and expenses for those plants. The agreements for the jointly-owned plants provide that if an owner were to default on its payment obligations, the non-defaulting owners would be responsible for their proportionate share of the obligations of the defaulting owner. In exchange, the non-defaulting owners would be entitled to their proportionate share of the generating capacity of the defaulting owner. There have been no such payment defaults under any of the agreements for the jointly-owned plants.

PNMR Services Company expenses, which represent costs that are primarily driven by corporate level activities, are charged to the business segments. These services are billed at cost and are reflected as general and administrative expenses in the business segments. Other significant intercompany transactions between TXNM, PNM, and TNMP include intercompany loans, interest and income tax sharing payments, as well as equity transactions, and interconnection billings. All intercompany transactions and balances have been eliminated. See Note 20.

### Accounting for the Effects of Certain Types of Regulation

The Company maintains its accounting records in accordance with the uniform system of accounts prescribed by FERC and adopted by the NMPRC and PUCT.

Certain of the Company's operations are regulated by the NMPRC, PUCT, and FERC and the provisions of GAAP for rate-regulated enterprises are applied to the regulated operations. Regulators may assign costs to accounting periods that differ

Table of Contents



from accounting methods applied by non-regulated utilities. When it is probable that regulators will permit recovery of costs through future rates, costs are deferred as regulatory assets that otherwise would be expensed. Likewise, regulatory liabilities are recognized when it is probable that regulators will require refunds through future rates or when revenue is collected for expenditures that have not yet been incurred. GAAP also provides for the recognition of revenue and regulatory assets and liabilities associated with "alternative revenue programs" authorized by regulators. Such programs allow the utility to adjust future rates in response to past activities or completed events, if certain criteria are met. Regulatory assets and liabilities are amortized into earnings over the authorized recovery period. Accordingly, the Company has deferred certain costs and recorded certain liabilities pursuant to the rate actions of the NMPRC, PUCT, and FERC. Information on regulatory assets and regulatory liabilities is contained in Note 13.

In some circumstances, regulators allow a requested increase in rates to be implemented, subject to refund, before the regulatory process has been completed and a decision rendered by the regulator. When this occurs, the Company assesses the possible outcomes of the rate proceeding. The Company records a provision for refund to the extent the amounts being collected, subject to refund, exceed the amount the Company determines is probable of ultimately being allowed by the regulator.

**Cash and Restricted Cash**

Investments in highly liquid investments with original maturities of three months or less at the date of purchase are considered cash and cash equivalents. Cash deposits received and held for a period of time that are restricted to a specific purpose, under the terms of their effective agreements, are considered restricted cash. PNM and TXNM have restricted cash balances related to the ETBC I Securitized Bonds. Restricted cash amounts are included in Other current assets and Other deferred charges on the Consolidated Balance Sheets as of December 31, 2025 and 2024. See Note 10. At December 31, 2025 and 2024 there was no restricted cash for TNMP.

**Utility Plant**

Utility plant is stated at original cost and includes capitalized payroll-related costs such as taxes, pension, other fringe benefits, administrative costs, and AFUDC, where authorized by rate regulation, or capitalized interest.

Repairs, including major maintenance activities, and minor replacements of property are expensed when incurred, except as required by regulators for ratemaking purposes. Major replacements are charged to utility plant. Gains, losses, and costs to remove resulting from retirements or other dispositions of regulated property in the normal course of business are credited or charged to accumulated depreciation.

PNM and TNMP may receive reimbursements, referred to as CIAC, from customers to pay for all or part of certain construction projects to the extent the project does not benefit regulated customers in general. PNM and TNMP account for these reimbursements as offsets to utility plant additions based on the requirements of the NMPRC, FERC, and PUCT. Due to the PUCT's regulatory treatment of CIAC reimbursements, TNMP also receives a financing component that is recognized as Other income on the Consolidated Statements of Earnings. Under the NMPRC regulatory treatment, PNM typically does not receive a financing component.

**Depreciation and Amortization**

PNM's provision for depreciation of utility plant is based upon straight-line rates approved by the NMPRC and FERC. Amortization of nuclear fuel is based on units-of-production. Amortization of software is straight-line. TNMP's provision for depreciation and of utility plant is based upon straight-line rates approved by the PUCT. Amortization of software is straight-line. Depreciation and amortization of non-utility property, including right-of-use assets for finance leases as discussed in Note 8, is computed based on the straight-line method. The provision for depreciation of certain equipment is allocated between operating expenses and construction projects based on the use of the equipment. Average straight-line rates used were as follows:

| | Year ended December 31, | | |
|---|---|---|---|
| | **2025** | **2024** | **2023** |
| PNM | | | |
| Electric plant | 2.88 % | 2.87 % | 2.67 % |
| Common and general plant | 13.43 | 14.06 | 7.64 |
| TNMP | 3.75 | 3.74 | 3.77 |

Table of Contents

**TXNM ENERGY, INC. AND SUBSIDIARIES**
**PUBLIC SERVICE COMPANY OF NEW MEXICO AND SUBSIDIARIES**
**TEXAS-NEW MEXICO POWER COMPANY AND SUBSIDIARIES**

**NOTES TO CONSOLIDATED FINANCIAL STATEMENTS**
**December 31, 2025, 2024 and 2023**

Depreciation expense on electric, common, intangible, and general plant is as follows:

| | Year ended December 31, | | |
|---|---|---|---|
| | 2025 | 2024 | 2023 |
| | (In thousands) | | |
| PNM | $ 207,341 | $ 188,035 | $ 158,956 |
| TNMP | 142,959 | 124,976 | 110,675 |

**Allowance for Funds Used During Construction**

As provided by the FERC uniform systems of accounts, AFUDC is charged to regulated utility plant for construction projects. This allowance is designed to enable a utility to capitalize financing costs during periods of construction of property subject to rate regulation. It represents the cost of borrowed funds (allowance for borrowed funds used during construction or "debt AFUDC") and a return on other funds (allowance for equity funds used during construction or "equity AFUDC"). The debt AFUDC is recorded in interest charges and the equity AFUDC is recorded in other income on the Consolidated Statements of Earnings.

For the years ended December 31, 2025, 2024, and 2023, PNM recorded $13.9 million, $12.9 million, and $9.5 million of debt AFUDC at annual rates of 3.66%, 3.19%, and 2.99% and $9.7 million, $13.0 million, and $9.8 million of equity AFUDC at annual rates of 2.58%, 3.30%, and 3.24%. For the years ended December 31, 2025, 2024, and 2023, TNMP recorded $8.0 million, $8.0 million, and $5.7 million of debt AFUDC at rates of 3.01%, 4.14%, and 3.49%, and $8.9 million,$4.8 million, and $5.1 million of equity AFUDC at rates of 3.33%, 2.48%, and 3.17%.

**Materials, Supplies, and Fuel Stock**

Materials and supplies relate to transmission, distribution, and generating assets. Materials and supplies are charged to inventory when purchased and are expensed or capitalized as appropriate when issued. Materials and supplies are valued using an average costing method. Inventories consisted of the following at December 31:

| | TXNM | | PNM | | TNMP | |
|---|---|---|---|---|---|---|
| | 2025 | 2024 | 2025 | 2024 | 2025 | 2024 |
| | | | (In thousands) | | | |
| Fuel Oil | $ 1,090 | $ 1,095 | $ 1,090 | $ 1,095 | $ — | $ — |
| Materials and supplies | 180,226 | 165,766 | 144,573 | 141,415 | 35,653 | 24,351 |
| | $ 181,316 | $ 166,861 | $ 145,663 | $ 142,510 | $ 35,653 | $ 24,351 |

**Investments**

PNM holds investment securities in the NDT for the purpose of funding its share of the decommissioning costs of PVNGS, a trust for PNM's share of decommissioning costs at SJGS, and trusts for PNM's share of final reclamation costs related to the coal mines that served SJGS and continue to serve Four Corners (Note 16). Investments (both equity and available-for-sale debt securities) are measured at fair value on a quarterly basis with changes in fair value for equity securities recognized in earnings for that period. Since third party investment managers have sole discretion over the purchase and sale of the securities (under general guidelines and targets provided by management), PNM records an impairment, as a realized loss, for any available-for-sale debt security that has a fair value which is less than cost at the end of each quarter. For the years ended December 31, 2025, 2024 and 2023, PNM recorded impairment losses on the available-for-sale debt securities of $0.0 million, $17.8 million and $(19.1) million. No gains or losses are deferred as regulatory assets or liabilities. See Notes 3 and 9. All investments are held in PNM's name and are in the custody of major financial institutions. The specific identification method is used to determine the cost of securities disposed of, with realized gains and losses reflected in other income and deductions.

As discussed above, PNM immediately records an impairment loss for any available-for-sale debt security that has a fair value that is less than its carrying value. As a result, the Company has no available-for-sale debt securities for which carrying value exceeds fair value and there are no impairments considered to be "other than temporary" that are included in AOCI and not recognized in earnings. All gains and losses resulting from sales and changes in the fair value of equity securities are recognized immediately in earnings.

Table of Contents



**Equity Method Investment (Previously held)**

TXNM accounted for its investment in NMRD using the equity method of accounting because TXNM's ownership interest resulted in significant influence, but not control, over NMRD and its operations. TXNM recorded as income its percentage share of earnings or loss of NMRD and carried its investment at cost, adjusted for its share of undistributed earnings or losses, until its investment was sold on February 27, 2024. See Note 21.

**Goodwill**

The Company does not amortize goodwill. Goodwill is evaluated for impairment annually, or more frequently if events and circumstances indicate that the goodwill might be impaired. See Note 19.

**Asset Impairment**

Tangible long-lived assets and right-of-use assets associated with leases are evaluated in relation to the estimated future undiscounted cash flows to assess recoverability when events and circumstances indicate that the assets might be impaired.

**Revenue Recognition**

See Note 4 for a discussion of electric operating revenues.

**Accounts Receivable and Allowance for Credit Losses**

See Note 4 for a discussion of accounts receivable and the allowance for credit losses.

**Amortization of Debt Acquisition Costs**

Discount, premium, and expense related to the issuance of long-term debt are amortized over the lives of the respective issues. Gains and losses incurred upon the early retirement of long-term debt are recognized in other income or other deductions, except for amounts recoverable through NMPRC, FERC, or PUCT regulation, which are recorded as regulatory assets or liabilities and amortized over the lives of the respective issues. Unamortized premium, discount, and expense related to long-term debt are reflected as part of the related liability on the Consolidated Balance Sheets.

**Derivatives**

The Company records derivative instruments, including energy contracts, on the balance sheet as either an asset or liability measured at their fair value. Changes in the derivatives' fair value are recognized in earnings unless specific hedge accounting criteria are met. PNM also records certain commodity derivative transactions recoverable through NMPRC regulation as regulatory assets or liabilities. See Note 9.

The Company treats all forward commodity purchases and sales contracts subject to unplanned netting or "book-out" by the transmission provider as derivative instruments subject to mark-to-market accounting. GAAP provides guidance on whether realized gains and losses on derivative contracts not held for trading purposes should be reported on a net or gross basis and concludes such classification is a matter of judgment that depends on the relevant facts and circumstances. See Note 4.

**Decommissioning and Reclamation Costs**

PNM is only required to recognize and measure decommissioning liabilities for tangible long-lived assets for which a legal obligation exists. Nuclear decommissioning costs and related accruals are based on periodic site-specific estimates of the costs for removing all radioactive and other structures at PVNGS and are dependent upon numerous assumptions, including estimates of future decommissioning costs at current price levels, inflation rates, and discount rates. PNM's accruals for PVNGS Units 1, 2, and 3, including portions previously held under leases, have been made based on such estimates, the guidelines of the NRC, and the PVNGS license periods. PNM records its share of the SJGS decommissioning obligation as an ARO on its Consolidated Balance Sheets. Studies on the decommissioning costs of SJGS are performed periodically and revisions to the ARO liability are recorded. See Note 16.

Table of Contents



In connection with both the SJGS and Four Corners coal supply agreements, the owners are required to reimburse the mining companies for the cost of contemporaneous reclamation, as well as the costs for final reclamation of the coal mines. The reclamation costs are based on periodic site-specific studies that estimate the costs to be incurred in the future and are dependent upon numerous assumptions, including estimates of future reclamation costs at current price levels, inflation rates, and discount rates. PNM considers the contemporaneous reclamation costs part of the cost of its delivered coal costs. See Note 16 for a discussion of reclamation costs.

**Environmental Costs**

The normal operations of the Company involve activities and substances that expose the Company to potential liabilities under laws and regulations protecting the environment. Liabilities under these laws and regulations can be material and may be imposed without regard to fault, or may be imposed for past acts, even though the past acts may have been lawful at the time they occurred.

The Company records its environmental liabilities when site assessments or remedial actions are probable, and a range of reasonably likely cleanup costs can be estimated. The Company reviews its sites and measures the liability by assessing a range of reasonably likely costs for each identified site using currently available information and the probable level of involvement and financial condition of other potentially responsible parties. These estimates are based on assumptions regarding the costs for site investigations, remediation, operations and maintenance, monitoring, and site closure. The ultimate cost to clean up the Company's identified sites varies from its recorded liability due to numerous uncertainties inherent in the estimation process. See Note 16.

**Pension and Other Postretirement Benefits**

See Note 11 for a discussion of pension and postretirement benefits expense, including a discussion of the actuarial assumptions.

**Stock-Based Compensation**

See Note 12 for a discussion of stock-based compensation expense.

**Income Taxes**

Income taxes are recognized using the asset and liability method of accounting for income taxes. Deferred tax assets and liabilities are recognized for the estimated future tax consequences attributable to differences between the financial statement carrying value of existing assets and liabilities and their respective tax basis. All deferred taxes are reflected as non-current on the Consolidated Balance Sheets. Current NMPRC, FERC, and PUCT approved rates include the tax effects of the majority of these differences. Rate-regulated enterprises are required to record deferred income taxes for temporary differences accorded flow-through treatment at the direction of a regulatory commission. The resulting deferred tax assets and liabilities are recorded based on the expected cash flow to be reflected in future rates. Because the NMPRC, FERC, and the PUCT have consistently permitted the recovery of tax effects previously flowed-through earnings, the Company has established regulatory assets and liabilities offsetting such deferred tax assets and liabilities. The Company recognizes only the impact of tax positions that, based on their merits, are more likely than not to be sustained upon an IRS audit. The Company defers investment tax credits and amortizes them over the estimated useful lives of the assets. See Note 18 for additional information, including a discussion of the impact of the Tax Act.

The Company makes an estimate of its anticipated effective tax rate for the year as of the end of each quarterly period within its fiscal year. In interim periods, income tax expense is calculated by applying the anticipated annual effective tax rate to year-to-date earnings before taxes. Certain unusual or infrequently occurring items, as well as adjustments due to enactment of new tax laws, have been excluded from the estimated annual effective tax rate calculation.

**Lease Commitments**

See Note 8 for a discussion of lease commitments.

Table of Contents

**TXNM ENERGY, INC. AND SUBSIDIARIES**
**PUBLIC SERVICE COMPANY OF NEW MEXICO AND SUBSIDIARIES**
**TEXAS-NEW MEXICO POWER COMPANY AND SUBSIDIARIES**

**NOTES TO CONSOLIDATED FINANCIAL STATEMENTS**
**December 31, 2025, 2024 and 2023**

**New Accounting Pronouncements**

Information concerning recently issued accounting pronouncements that have not yet been adopted by the Company is presented below. The Company does not expect difficulty in adopting these standards by their required effective dates.

*Accounting Standards Update 2024-03 - Income Statement (Subtopic 220-40): Reporting Comprehensive Income - Expense Disaggregation Disclosures*

In November 2024, the FASB issued ASU 2024-03 that will require disclosure, in the notes to the financial statements, of specified information about certain costs and expenses at each interim and annual period. Disclosures should include amounts for purchases of inventory, employee compensation, depreciation and, intangible asset amortization; certain amounts that are already required to be disclosed under GAAP in the same disclosure as other disaggregation requirements; qualitative descriptions of the amounts remaining in relevant expense categories that are not disaggregated; and the total amount of selling expenses including the entity's definition of selling expenses. In January 2025, ASU 2025-01 was issued to clarify that the amendments of ASU 2024-03 are effective for public business entities for annual reporting periods beginning after December 15, 2026, and interim reporting periods beginning after December 15, 2027. The Company expects to adopt the disclosure requirements of ASU 2024-03 with its Annual Report on Form 10-K for the year ended December 31, 2027.

*Accounting Standards Update 2025-05 – Financial Instruments – Credit Losses (Topic 326): Measurement of Credit Losses for Accounts Receivable and Contract Assets*

In July 2025, the FASB issued ASU 2025-05 that introduces a practical expedient for all entities and an accounting policy election for entities other than public business entities, related to applying Subtopic 326-20 to current accounts receivable and current contract assets arising from transactions accounted for under Topic 606. In developing a reasonable and supportable forecast as a part of estimating expected credit losses, all entities may elect a practical expedient that assumes that current conditions as of the balance sheet date do not change for the remaining life of the asset. Entities other than public business entities that elect the practical expedient are permitted to make an accounting policy election to consider collection activity after the balance sheet date when estimating expected credit losses. An entity that elects the practical expedient and the accounting policy election, if applicable, should apply the amendments in this update prospectively. The amendments in this update are effective for all entities for annual reporting periods beginning after December 15, 2025, and interim reporting periods within those annual reporting periods. Early adoption is permitted. The Company has not yet determined whether it will elect the practical expedient for estimating credit losses, however, it does not expect that this will have a material impact on its current allowance for expected credit losses.

*Accounting Standards Update 2025-06 – Intangibles – Goodwill and Other – Internal-Use Software (Subtopic 350-40): Targeted Improvements to the Accounting for Internal-Use Software*

In September 2025, the FASB issued ASU 2025-06 that updates the internal-use software guidance in subtopic 350-40 including the removal of all references to prescriptive and sequential developmental stages referred to as "project stages" throughout the subtopic. The new guidance requires an entity to start capitalizing software costs when management has authorized and committed to funding the project and it is probable that the project will be completed and used to perform the function it was intended for (referred to as the "probable-to-complete recognition threshold"). During the evaluation of the probable-to-complete recognition threshold, the entity is required to consider whether there is significant uncertainty associated with the development activities of the software. The amendments in this update are effective for all entities for annual reporting periods beginning after December 15, 2027, and interim reporting periods within those annual reporting periods. Early adoption is permitted as of the beginning of an annual reporting period. The amendments in this update permit an entity to apply the new guidance using a prospective transition approach, a modified transition approach (based on the status of a project and whether software costs were capitalized before the date of adoption), or a full retrospective transition approach. The Company has not yet determined which approach to adopt nor the impact that the new guidance will have on the accounting for its internal-use software projects.

**(2) Segment Information**

TXNM has three reportable segments including PNM, TNMP, and Corporate and other. The accounting policies of the segments are the same as those described in the summary of significant accounting policies. The measure of profitability used by the CODM is Segment earnings (loss) attributable to TXNM, as presented below. The CODM uses this measure of profitability to allocate resources for each segment predominantly in the annual budget and forecasting process. The CODM considers budget to actual variances on a regular basis when making decisions about allocating capital and operational expense funding to the segments. TXNM's CODM is its President and CEO who is also the CEO of the PNM and TNMP segments.

Table of Contents

**TXNM ENERGY, INC. AND SUBSIDIARIES**
**PUBLIC SERVICE COMPANY OF NEW MEXICO AND SUBSIDIARIES**
**TEXAS-NEW MEXICO POWER COMPANY AND SUBSIDIARIES**

**NOTES TO CONSOLIDATED FINANCIAL STATEMENTS**
**December 31, 2025, 2024 and 2023**

**PNM**

PNM includes the retail electric utility operations of PNM that are subject to traditional rate regulation by the NMPRC. PNM provides integrated electricity services that include the generation, transmission, and distribution of electricity for retail electric customers in New Mexico. PNM also includes the generation and sale of electricity into the wholesale market, which includes the asset optimization of PNM's jurisdictional capacity as well as providing transmission services to third parties. FERC has jurisdiction over wholesale power and transmission rates. PNM includes the results of ETBC I upon its formation in 2023.

**TNMP**

TNMP is an electric utility providing services in Texas under the TECA. TNMP's operations are subject to traditional rate regulation by the PUCT. TNMP provides transmission and distribution services at regulated rates to various REPs that, in turn, provide retail electric service to consumers within TNMP's service area. TNMP also provides transmission services at regulated rates to other utilities that interconnect with TNMP's facilities.

**Corporate and Other**

The Corporate and Other segment includes TXNM holding company activities, primarily related to corporate level debt and PNMR Services Company. The activities of PNMR Development and the equity method investment in NMRD are also included in Corporate and Other until the close of the sale of NMRD on February 27, 2024 (Note 21). Eliminations of intercompany transactions are reflected in the Corporate and Other segment.

The following tables present summarized financial information for TXNM by segment. PNM and TNMP each operate in only one segment. Therefore, tabular segment information is not presented for PNM and TNMP.

| 2025 | PNM | TNMP | Corporate and Other | TXNM Consolidated |
|---|---|---|---|---|
| | | (In thousands) | | |
| **Electric operating revenues** | $ 1,484,290 | $ 681,316 | $ — | $ 2,165,606 |
| **Cost of energy** | | | | |
| Fuel burn | 131,395 | — | — | 131,395 |
| Purchases for resale | 393,154 | — | — | 393,154 |
| Transmission by others | 24,607 | 166,849 | — | 191,456 |
| **Significant segment expenses** | | | | |
| Administrative and general - direct | 76,659 | 252 | 163,673 | 240,584 |
| Administrative and general - corporate allocation | 133,410 | 53,852 | (187,262) | — |
| Customer related expenses | 30,783 | 3,086 | — | 33,869 |
| Energy production costs | 98,371 | — | — | 98,371 |
| Regulatory disallowances | (731) | — | — | (731) |
| Depreciation and amortization | 244,205 | 143,942 | 37,494 | 425,641 |
| Transmission and distribution costs | 63,349 | 37,445 | — | 100,794 |
| Taxes other than income taxes | 56,485 | 47,174 | 6,235 | 109,894 |
| **Total operating expenses** | 1,251,687 | 452,600 | 20,140 | 1,724,427 |
| Net other income and (deductions) | (2,026) | 14,615 | (2,233) | 10,356 |
| Interest charges | (129,478) | (86,956) | (55,088) | (271,522) |
| Income taxes (benefit) | (4,442) | 32,085 | (17,456) | 10,187 |
| Valencia non-controlling interest | (17,936) | — | — | (17,936) |
| Subsidiary preferred stock dividends | (528) | — | — | (528) |
| **Segment earnings (loss) attributable to TXNM** | $ 87,077 | $ 124,290 | $ (60,005) | $ 151,362 |
| **At December 31, 2025:** | | | | |
| **Total Assets** | $ 7,688,132 | $ 4,187,718 | $ 183,435 | $ 12,059,285 |
| **Goodwill** | $ 51,632 | $ 226,665 | $ — | $ 278,297 |

Table of Contents

**TXNM ENERGY, INC. AND SUBSIDIARIES**
**PUBLIC SERVICE COMPANY OF NEW MEXICO AND SUBSIDIARIES**
**TEXAS-NEW MEXICO POWER COMPANY AND SUBSIDIARIES**

**NOTES TO CONSOLIDATED FINANCIAL STATEMENTS**
**December 31, 2025, 2024 and 2023**

| 2024 | PNM | TNMP | Corporate and Other | TXNM Consolidated |
|---|---|---|---|---|
| | | (In thousands) | | |
| **Electric operating revenues** | $ 1,379,088 | $ 592,111 | $ — | $ 1,971,199 |
| **Cost of energy** | | | | |
| Fuel burn | 130,380 | — | — | 130,380 |
| Purchases for resale | 286,399 | — | — | 286,399 |
| Transmission by others | 18,139 | 149,066 | — | 167,205 |
| **Significant segment expenses** | | | | |
| Administrative and general - direct | 63,105 | (1,452) | 151,089 | 212,742 |
| Administrative and general - corporate allocation | 132,209 | 53,166 | (185,375) | — |
| Customer related expenses | 31,246 | 2,997 | 131 | 34,374 |
| Energy production costs | 93,748 | — | — | 93,748 |
| Regulatory disallowances | 8,980 | — | — | 8,980 |
| Depreciation and amortization | 221,780 | 125,915 | 37,230 | 384,925 |
| Transmission and distribution costs | 61,302 | 37,078 | — | 98,380 |
| Taxes other than income taxes | 49,807 | 44,441 | 6,332 | 100,580 |
| **Total operating expenses** | 1,097,095 | 411,211 | 9,407 | 1,517,713 |
| Net other income and (deductions) | 61,494 | 8,725 | (15,399) | 54,820 |
| Interest charges | (106,018) | (58,983) | (63,065) | (228,066) |
| Income taxes (benefit) | 29,217 | 27,114 | (34,813) | 21,518 |
| Valencia non-controlling interest | (16,040) | — | — | (16,040) |
| Subsidiary preferred stock dividends | (528) | — | — | (528) |
| **Segment earnings (loss) attributable to TXNM** | $ 191,684 | $ 103,528 | $ (53,058) | $ 242,154 |
| **At December 31, 2024:** | | | | |
| **Total Assets** | $ 7,407,279 | $ 3,649,125 | $ 155,329 | $ 11,211,733 |
| **Goodwill** | $ 51,632 | $ 226,665 | $ — | $ 278,297 |
| **2023** | | | | |
| **Electric operating revenues** | $ 1,403,948 | $ 535,250 | $ — | $ 1,939,198 |
| **Cost of energy** | | | | |
| Fuel burn | 138,538 | — | — | 138,538 |
| Purchases for resale | 499,921 | — | — | 499,921 |
| Transmission by others | 25,155 | 138,647 | — | 163,802 |
| **Significant segment expenses** | | | | |
| Administrative and general - direct | 52,554 | 2,710 | 139,010 | 194,274 |
| Administrative and general - corporate allocation | 124,321 | 47,470 | (171,791) | — |
| Customer related expenses | 29,775 | 3,783 | 68 | 33,626 |
| Energy production costs | 91,610 | — | — | 91,610 |
| Regulatory disallowances | 70,750 | 1,173 | — | 71,923 |
| Depreciation and amortization | 177,633 | 113,142 | 28,728 | 319,503 |
| Transmission and distribution costs | 61,725 | 36,996 | — | 98,721 |
| Taxes other than income taxes | 48,790 | 41,311 | 5,839 | 95,940 |
| **Total operating expenses** | 1,320,772 | 385,232 | 1,854 | 1,707,858 |
| Net other income and (deductions) | 41,358 | 8,368 | (182) | 49,544 |
| Interest charges | (86,574) | (46,152) | (57,629) | (190,355) |
| Income taxes (benefit) | (16,758) | 17,297 | (16,889) | (16,350) |
| Valencia non-controlling interest | (18,533) | — | — | (18,533) |
| Subsidiary preferred stock dividends | (528) | — | — | (528) |
| **Segment earnings (loss) attributable to TXNM** | $ 35,657 | $ 94,937 | $ (42,776) | $ 87,818 |
| **At December 31, 2023:** | | | | |
| **Total Assets** | $ 6,813,065 | $ 3,145,031 | $ 294,509 | $ 10,252,605 |
| **Goodwill** | $ 51,632 | $ 226,665 | $ — | $ 278,297 |

Table of Contents

**TXNM ENERGY, INC. AND SUBSIDIARIES**
**PUBLIC SERVICE COMPANY OF NEW MEXICO AND SUBSIDIARIES**
**TEXAS-NEW MEXICO POWER COMPANY AND SUBSIDIARIES**

**NOTES TO CONSOLIDATED FINANCIAL STATEMENTS**
**December 31, 2025, 2024 and 2023**

*Significant Segment Expenses*

Reflected above are certain additional categories of operating expenses that are regularly provided to the CODM. Cost of energy consists primarily of fuel and purchase power costs for PNM and costs charged by third-party transmission providers for TNMP. Administrative and general - direct expenses are those that are incurred directly by the segment while corporate allocation are those costs that are incurred by the corporate and other segment and allocated to the utilities based on the nature of the cost incurred. Corporate allocation is eliminated in the corporate and other segment. Customer related expenses include meter reading, customer service, and bad debt expenses.

**Major Customers**

PNM's participation in EIM, operated by CAISO, accounted for approximately 1%, 4%, and 15% of electric operating revenues during the years ended December 31, 2025, 2024, and 2023. These revenues are passed on to customers under PNM's FPPAC with no impact to net earnings. Two REPs during the years ended December 31, 2025, 2024, and 2023 accounted for more than 10% of the electric operating revenues of TNMP as follows:

| | Year Ended December 31, | | |
|---|---|---|---|
| | **2025** | **2024** | **2023** |
| REP A | 24 % | 26 % | 25 % |
| REP B | 19 | 20 | 19 |

**(3) Accumulated Other Comprehensive Income (Loss)**

AOCI reports a measure for accumulated changes in equity that result from transactions and other economic events other than transactions with shareholders. Information regarding AOCI is as follows:

| | Accumulated Other Comprehensive Income (Loss) | | | | |
|---|---|---|---|---|---|
| | PNM | | | TXNM | |
| | **Unrealized Gains on Available-for-Sale Securities** | **Pension Liability Adjustment** | **Total** | **Fair Value Adjustment for Cash Flow Hedges** | **Total** |
| | (In thousands) | | | | |
| **Balance at December 31, 2022** | $ 7,422 | $ (81,757) | $ (74,335) | $ 8,287 | $ (66,048) |
| Amounts reclassified from AOCI (pre-tax) | (7,199) | 4,776 | (2,423) | 9,287 | 6,864 |
| Income tax impact of amounts reclassified | 1,828 | (1,212) | 616 | (2,359) | (1,743) |
| Other OCI changes (pre-tax) | 11,529 | 1,389 | 12,918 | (15,483) | (2,565) |
| Income tax impact of other OCI changes | (2,928) | (353) | (3,281) | 3,933 | 652 |
| Net after-tax change | 3,230 | 4,600 | 7,830 | (4,622) | 3,208 |
| **Balance at December 31, 2023** | 10,652 | (77,157) | (66,505) | 3,665 | (62,840) |
| Amounts reclassified from AOCI (pre-tax) | (13,108) | 4,866 | (8,242) | 10,348 | 2,106 |
| Income tax impact of amounts reclassified | 3,330 | (1,236) | 2,094 | (2,629) | (535) |
| Other OCI changes (pre-tax) | (885) | (3,210) | (4,095) | (15,260) | (19,355) |
| Income tax impact of other OCI changes | 225 | 815 | 1,040 | 3,876 | 4,916 |
| Net after-tax change | (10,438) | 1,235 | (9,203) | (3,665) | (12,868) |
| **Balance at December 31, 2024** | $ 214 | $ (75,922) | $ (75,708) | $ — | $ (75,708) |

Table of Contents

**TXNM ENERGY, INC. AND SUBSIDIARIES**
**PUBLIC SERVICE COMPANY OF NEW MEXICO AND SUBSIDIARIES**
**TEXAS-NEW MEXICO POWER COMPANY AND SUBSIDIARIES**

**NOTES TO CONSOLIDATED FINANCIAL STATEMENTS**
**December 31, 2025, 2024 and 2023**

| | Accumulated Other Comprehensive Income (Loss) | | | | |
|---|---|---|---|---|---|
| | PNM | | | TXNM | |
| | Unrealized Gains on Available-for-Sale Securities | Pension Liability Adjustment | Total | Fair Value Adjustment for Cash Flow Hedges | Total |
| | | | (In thousands) | | |
| **Balance at December 31, 2024** | $ 214 | $ (75,922) | $ (75,708) | $ — | $ (75,708) |
| Amounts reclassified from AOCI (pre-tax) | (785) | 64,265 | 63,480 | — | 63,480 |
| Income tax impact of amounts reclassified | 199 | (16,323) | (16,124) | — | (16,124) |
| Other OCI changes (pre-tax) | 791 | 2,760 | 3,551 | (1,492) | 2,059 |
| Income tax impact of other OCI changes | (201) | (701) | (902) | 379 | (523) |
| Net after-tax change | 4 | 50,001 | 50,005 | (1,113) | 48,892 |
| **Balance at December 31, 2025** | $ 218 | $ (25,921) | $ (25,703) | $ (1,113) | $ (26,816) |

The Consolidated Statements of Earnings include pre-tax amounts reclassified from AOCI related to Unrealized Gains on Available-for-Sale Debt Securities in gains (losses) on investment securities, related to Pension Liability Adjustment in other (deductions), and related to Fair Value Adjustment for Cash Flow Hedges in interest charges. The income tax impacts of all amounts reclassified from AOCI are included in income taxes in the Consolidated Statements of Earnings.

**(4) Electric Operating Revenues**

**Accounts Receivable and Allowance for Credit Losses**

Accounts receivable consists primarily of trade receivables from customers. In the normal course of business, credit is extended to customers on a short-term basis. The Company estimates the allowance for credit losses on trade receivables based on historical experience and estimated default rates. Accounts receivable balances are reviewed monthly, adjustments to the allowance for credit losses are made as necessary and amounts that are deemed uncollectible are written off. In addition to the allowance for credit losses on trade receivables, the Company has evaluated other receivables for potential credit related losses. These balances include potential exposures for other non-retail utility services. In the years ended December 31, 2025, and 2024, there were no estimated credit losses related to these transactions.

**Revenue Recognition**

Retail electric operating revenues are recorded in the period of energy delivery, which includes estimated amounts for service rendered but unbilled at the end of each accounting period. The determination of the energy sales billed to individual retail customers is based on the reading of their meters, which occurs on a systematic basis throughout the month. At the end of each month, amounts of energy delivered to customers since the date of the last meter reading and the corresponding unbilled revenue are estimated. Unbilled electric revenue is estimated based on daily generation volumes, estimated customer usage by class, line losses, historical trends and experience, applicable customer rates or by using AMS data where available. Amounts billed are generally due within the next month. The Company does not incur incremental costs to obtain contracts for its energy services.

PNM's wholesale electricity sales are recorded as electric operating revenues and wholesale electricity purchases are recorded as costs of energy sold. Derivative contracts that are subject to unplanned netting are recorded net in earnings. A "book-out" is the planned or unplanned netting of off-setting purchase and sale transactions. A book-out is a transmission mechanism to reduce congestion on the transmission system or administrative burden. For accounting purposes, a book-out is the recording of net revenues upon the settlement of a derivative contract.

Unrealized gains and losses on derivative contracts that are not designated for hedge accounting are classified as economic hedges. Economic hedges are defined as derivative instruments, including long-term power and fuel supply agreements, used to hedge generation assets and purchased power costs. Changes in the fair value of economic hedges are reflected in results of operations, with changes related to economic hedges on sales included in operating revenues and changes related to economic hedges on purchases included in cost of energy sold. See Note 9.

Table of Contents

**TXNM ENERGY, INC. AND SUBSIDIARIES**
**PUBLIC SERVICE COMPANY OF NEW MEXICO AND SUBSIDIARIES**
**TEXAS-NEW MEXICO POWER COMPANY AND SUBSIDIARIES**

**NOTES TO CONSOLIDATED FINANCIAL STATEMENTS**
**December 31, 2025, 2024 and 2023**

The Company has collaborative arrangements related to its interest in SJGS, Four Corners, PVNGS, and Luna. The Company has determined that during the years ended December 31, 2025, 2024, and 2023 none of the joint owners in its collaborative arrangements were customers under Topic 606. The Company will continue to evaluate transactions between collaborative arrangement participants in future periods under the revenue recognition standard.

PNM and TNMP recognize revenue as they satisfy performance obligations, which typically occurs as the customer or end-user consumes the electric service provided. Electric services are typically for a bundle of services that are distinct and transferred to the end-user in one performance obligation measured by KWh or KW. Electric operating revenues are recorded in the period of energy delivery, including estimated unbilled amounts. The Company has elected to exclude all sales and similar taxes from revenue.

Revenue from contracts with customers is recorded based upon the total authorized tariff or market price at the time electric service is rendered, including amounts billed under arrangements qualifying as an Alternative Revenue Program ("ARP"). ARP arrangements are agreements between PNM or TNMP and its regulator that allow PNM or TNMP to adjust future rates in response to past activities or completed events, if certain criteria are met. ARP revenues are required to be reported separately from contracts with customers. ARP revenues in a given period include the recognition of "originating" ARP revenues (i.e. when the regulator-specific conditions are met) in the period, offset by the reversal of ARP revenues currently approved for recovery by the governing bodies.

**Sources of Revenue**

Additional information about the nature of revenues is provided below. Additional information about matters affecting PNM's and TNMP's regulated revenues is provided in Note 17.

*Revenue from Contracts with Customers*

*PNM*

*NMPRC Regulated Retail Electric Service* – PNM provides electric generation, transmission, and distribution service to its rate-regulated customers in New Mexico. PNM's retail electric service territory covers a large area of north central New Mexico, including the cities of Albuquerque, Rio Rancho, and Santa Fe, and certain areas of southern New Mexico. Customer rates for retail electric service are set by the NMPRC, and revenue is recognized as energy is delivered to the customer. PNM invoices customers on a monthly basis for electric service and generally collects billed amounts within one month.

*Transmission Service to Third Parties* – PNM owns transmission lines that are interconnected with other utilities in New Mexico, Texas, Arizona, Colorado, and Utah. Transmission customers receive service for the transmission of energy owned by the customer utilizing PNM's transmission facilities. Customers generally receive transmission services, which are regulated by FERC, from PNM through PNM's Open Access Transmission Tariff ("OATT") or a specific contract. Customers are billed based on capacity and energy components on a monthly basis. PNM owns the Western Spirit Line and services under related transmission agreements use an incremental rate, approved by FERC, that is separate from the formula rate mechanism.

*Wholesale Energy Sales* – PNM engages in activities to optimize its existing jurisdictional assets and long-term power agreements through spot market, hour-ahead, day-ahead, week-ahead, month-ahead, and other sales of excess generation not required to fulfill retail load and contractual commitments. PNM participates in the EIM (a real-time wholesale energy trading market operated by the CAISO) that enables participating electric utilities to buy and sell energy. The NMPRC granted PNM authority to seek recovery of costs associated with joining the EIM, which have been included in the 2024 Rate Change and to pass the benefits of participating in EIM to customers through the FPPAC. Increases in electric operating revenue resulting from PNM's participation in EIM are passed on to customers through PNM's FPPAC with no impact to net earnings.

*TNMP*

*PUCT Regulated Retail Electric Service* – TNMP provides transmission and distribution services in Texas under the provisions of TECA and the Texas Public Utility Regulatory Act. TNMP is subject to traditional cost-of-service regulation with respect to rates and service under the jurisdiction of the PUCT and certain municipalities. TNMP's transmission and distribution activities are solely within ERCOT and not subject to traditional rate regulation by FERC. TNMP provides transmission and distribution services at regulated rates to various REPs that, in turn, provide retail electric service to

Table of Contents



consumers within TNMP's service territory. Revenue is recognized as energy is delivered to the consumer. TNMP invoices REPs on a monthly basis and is generally paid within a month.

*TCOS* – TNMP is a transmission service provider that is allowed to recover its TCOS through a network transmission rate that is approved by the PUCT. TCOS customers are other utilities that receive service for the transmission of energy owned by the customer utilizing TNMP's transmission facilities.

*Alternative Revenue Programs*

The Company defers certain costs and records certain liabilities pursuant to the rate actions of the NMPRC, PUCT, and FERC. ARP revenues, which are discussed above, include recovery or refund provisions under PNM's renewable energy rider and true-ups to PNM's formula transmission rates; transmission cost recovery factor, and the impacts of the PUCT's January 25, 2018 order regarding the change in the federal corporate income tax rate; the energy efficiency incentive bonus at both PNM and TNMP; HB 5247; and PNM's TOD rate pilot program. Regulatory assets and liabilities are recognized for the difference between ARP revenues and amounts currently approved for recovery by the governing bodies. Regulatory assets and liabilities are amortized into earnings as amounts are billed. TNMP's 2018 Rate Case integrated AMS costs into base rates beginning January 1, 2019. These costs are being amortized into earnings as alternative revenues over a period of five years.

*Other Electric Operating Revenues*

Other electric operating revenues consist primarily of PNM's economic hedges that meet the definition of a derivative and are therefore not considered revenue from contracts with customers. Derivative revenues include gains and losses representing changes in fair value (Note 9) and settlements from sales of electricity under forward sales contracts.

**Disaggregation of Revenues**

A disaggregation of revenues from contracts with customers by the type of customer is presented in the table below. The table also reflects ARP revenues and other revenues.

| Year Ended December 31, 2025 | PNM | TNMP | TXNM Consolidated |
|---|---|---|---|
| | | (In thousands) | |
| **Electric Operating Revenues:** | | | |
| Contracts with customers: | | | |
| Retail electric revenue | | | |
| Residential | $ 555,611 | $ 235,356 | $ 790,967 |
| Commercial | 465,639 | 187,965 | 653,604 |
| Industrial | 146,051 | 58,394 | 204,445 |
| Public authority | 24,113 | 8,410 | 32,523 |
| Economy energy service | 27,704 | — | 27,704 |
| Transmission | 149,669 | 170,061 | 319,730 |
| Wholesale energy sales | 97,755 | — | 97,755 |
| Miscellaneous | 6,336 | 3,860 | 10,196 |
| Total revenues from contracts with customers | 1,472,878 | 664,046 | 2,136,924 |
| Alternative revenue programs | 4,255 | 17,270 | 21,525 |
| Other electric operating revenues | 7,157 | — | 7,157 |
| **Total Electric Operating Revenues** | $ 1,484,290 | $ 681,316 | $ 2,165,606 |

Table of Contents

**TXNM ENERGY, INC. AND SUBSIDIARIES**
**PUBLIC SERVICE COMPANY OF NEW MEXICO AND SUBSIDIARIES**
**TEXAS-NEW MEXICO POWER COMPANY AND SUBSIDIARIES**

**NOTES TO CONSOLIDATED FINANCIAL STATEMENTS**
**December 31, 2025, 2024 and 2023**

| Year Ended December 31, 2024 | PNM | TNMP | TXNM Consolidated |
|---|---|---|---|
| | | (In thousands) | |
| **Electric Operating Revenues:** | | | |
| Contracts with customers: | | | |
| Retail electric revenue | | | |
| Residential | $ 541,581 | $ 203,227 | $ 744,808 |
| Commercial | 460,311 | 166,858 | 627,169 |
| Industrial | 123,754 | 35,300 | 159,054 |
| Public authority | 23,161 | 7,329 | 30,490 |
| Economy energy service | 25,481 | — | 25,481 |
| Transmission | 141,058 | 157,049 | 298,107 |
| Wholesale energy sales | 64,903 | — | 64,903 |
| Miscellaneous | 5,776 | 3,813 | 9,589 |
| Total revenues from contracts with customers | 1,386,025 | 573,576 | 1,959,601 |
| Alternative revenue programs | (9,720) | 18,535 | 8,815 |
| Other electric operating revenues | 2,783 | — | 2,783 |
| **Total Electric Operating Revenues** | $ 1,379,088 | $ 592,111 | $ 1,971,199 |

| Year Ended December 31, 2023 | PNM | TNMP | TXNM Consolidated |
|---|---|---|---|
| | | (In thousands) | |
| **Electric Operating Revenues:** | | | |
| Contracts with customers: | | | |
| Retail electric revenue | | | |
| Residential | $ 425,448 | $ 190,953 | $ 616,401 |
| Commercial | 391,964 | 155,254 | 547,218 |
| Industrial | 90,084 | 45,508 | 135,592 |
| Public authority | 21,018 | 6,777 | 27,795 |
| Economy energy service | 34,340 | — | 34,340 |
| Transmission | 159,475 | 135,831 | 295,306 |
| Wholesale energy sales | 248,801 | — | 248,801 |
| Miscellaneous | 5,676 | 3,739 | 9,415 |
| Total revenues from contracts with customers | 1,376,806 [1] | 538,062 | 1,914,868 [1] |
| Alternative revenue programs | 9,419 | (2,812) | 6,607 |
| Other electric operating revenues | 17,723 | — | 17,723 |
| **Total Electric Operating Revenues** | $ 1,403,948 | $ 535,250 | $ 1,939,198 |

[1] Included in revenue from contracts with customers at PNM and TXNM is a $128.7 million reduction associated with the SJGS abandonment settlement and a $38.4 million reduction associated with PVNGS leased capacity as a result of the NMPRC final order in the 2024 Rate Change.

**Contract Balances**

Performance obligations related to contracts with customers are typically satisfied when the energy is delivered, and the customer or end-user utilizes the energy. Accounts receivable from customers represents amounts billed, including amounts under ARPs. For PNM, accounts receivable reflected on the Consolidated Balance Sheets, net of allowance for credit losses, includes $115.9 million and $94.3 million at December 31, 2025 and 2024 resulting from contracts with customers. All of TNMP's accounts receivable results from contracts with customers.

Contract assets are an entity's right to consideration in exchange for goods or services that the entity has transferred to a customer when that right is conditioned on something other than the passage of time (for example, the entity's future performance). Upon the completion of the Western Spirit Line, PNM entered into a TSA with Pattern Wind under an incremental tariff rate approved by FERC. The terms of the agreement provide for a financing component that benefits the customer. As such, the revenue that PNM recognizes will be in excess of the consideration received at the beginning of the

Table of Contents

**TXNM ENERGY, INC. AND SUBSIDIARIES**
**PUBLIC SERVICE COMPANY OF NEW MEXICO AND SUBSIDIARIES**
**TEXAS-NEW MEXICO POWER COMPANY AND SUBSIDIARIES**

**NOTES TO CONSOLIDATED FINANCIAL STATEMENTS**
**December 31, 2025, 2024 and 2023**

service term resulting in a contract asset. The balance of the contract asset was $41.3 million at December 31, 2025 and $32.0 million at December 31, 2024, and is included in Other deferred charges on the Consolidated Balance Sheets.

Contract liabilities arise when consideration is received in advance from a customer before satisfying the performance obligations. Therefore, revenue is deferred and not recognized until the obligation is satisfied. Under its OATT, PNM accepts upfront consideration for capacity reservations requested by transmission customers, which requires PNM to defer the customer's transmission capacity rights for a specific period of time. PNM recognizes the revenue of these capacity reservations over the period it defers the customer's capacity rights. Other utilities pay PNM and TNMP in advance for the joint-use of their utility poles. These revenues are recognized over the period of time specified in the joint-use contract, typically for one calendar year. Deferred revenues on these arrangements are recorded as contract liabilities. TXNM's, PNM's, and TNMP's contract liabilities and related revenues are not material for any of the periods presented. The Company has no other arrangements with remaining performance obligations to which a portion of the transaction price would be required to be allocated.

**(5) Earnings and Dividends Per Share**

Basic earnings per share is computed by dividing net earnings attributable to TXNM by the weighted average number of common shares outstanding during the period. Diluted earnings per share was computed by dividing net earnings attributable to TXNM by the diluted weighted average number of common shares outstanding during the period. Diluted earnings per share reflect the potential dilution that could occur if securities or other agreements to issue common stock were settled. TXNM applies the treasury stock method for restricted stock, the 2022 ATM Program, the 2024 ATM Program, and the 2025 ATM Program. The if-converted method is applied in determining the potential dilutive effect of the conversion of outstanding Convertible Notes. Information regarding the computation of earnings per share and dividends per share is as follows:

| | Year Ended December 31, | | |
|---|---|---|---|
| | **2025** | **2024** | **2023** |
| | (In thousands, except per share amounts) | | |
| **Net Earnings Attributable to TXNM** | $ 151,362 | $ 242,154 | $ 87,818 |
| **Average Number of Common Shares:** | | | |
| Outstanding during year | 101,158 | 90,214 | 86,038 |
| Vested awards of restricted stock | 349 | 320 | 258 |
| **Average Shares – Basic** | 101,507 | 90,534 | 86,296 |
| **Dilutive Effect of Common Stock Equivalents:** | | | |
| TXNM ATM Programs | 74 | 12 | 38 |
| TXNM Convertible Notes | 757 | — | — |
| Restricted stock | 54 | 45 | 35 |
| **Average Shares – Diluted** | 102,392 | 90,591 | 86,369 |
| **Net Earnings Attributable to TXNM Per Share of Common Stock:** | | | |
| Basic | $ 1.49 | $ 2.67 | $ 1.02 |
| Diluted | $ 1.48 | $ 2.67 | $ 1.02 |
| **Dividends Declared per Common Share** | $ 1.65 | $ 1.57 | $ 1.49 |

**(6) Stockholders' Equity**

**Common Stock and Equity Contributions**

In each of the years ended December 31, 2025, 2024, and 2023, TXNM executed agreements pursuant to which it issued shares of TXNM common stock. Details of these transactions and the physical settlement of shares of TXNM common stock may be found in Note 7. Neither PNM nor TNMP issued any common stock in 2025, 2024, and 2023.

On August 2, 2024, TXNM increased the number of authorized shares of the TXNM common stock from 120,000,000 to 200,000,000.

TXNM funded cash equity contributions to PNM of $123.3 million, $55.0 million, and zero in 2025, 2024, and 2023. TXNM funded $250.0 million, $24.0 million, and $40.9 million of cash equity contributions to TNMP in 2025, 2024, and 2023.

Table of Contents



**Dividends on Common Stock**

The declaration of common dividends by TXNM is dependent upon a number of factors, including the ability of TXNM's subsidiaries to pay dividends. TXNM's primary sources of dividends are its operating subsidiaries.

PNM declared and paid cash dividends to TXNM of $51.0 million in 2024 but did not declare or pay any cash dividends in 2025 or 2023. TNMP did not declare or pay any cash dividends to TXNM in 2025, 2024, or 2023.

The NMPRC has placed certain restrictions on the ability of PNM to pay dividends to TXNM, including the restriction that PNM cannot pay dividends that cause its debt rating to fall below investment grade. The NMPRC provisions allow PNM to pay dividends, with at least 15 days prior notice, from current earnings, which are determined on a rolling four quarter basis, or from equity contributions previously made by TXNM. The Federal Power Act also imposes certain restrictions on dividends by public utilities. Debt-to-capitalization ratio requirements, as discussed in Note 7, remain at less than or equal to 65% for PNM and TNMP and less than or equal to 70% for TXNM. These debt-to-capitalization ratio requirements could limit the amounts of dividends that could be paid. PNM also has other financial covenants that limit the transfer of assets, through dividends or other means, including a requirement to obtain the approval of certain financial counterparties to transfer more than five percent of PNM's assets. As of December 31, 2025, the 65% debt-to-capitalization covenant would restrict the payment of dividends from the retained earnings of PNM to $624.1 million, and the 65% debt-to-capitalization covenant would restrict the payment of dividends by TNMP to $531.9 million. Similarly, the 70% debt-to-capitalization covenant would restrict the payment of dividends by TXNM to $1.7 billion.

In addition, the ability of TXNM to declare dividends is dependent upon the extent to which cash flows will support dividends, the availability of retained earnings, financial circumstances and performance, current and future regulatory decisions, Congressional and legislative acts, and economic conditions. Conditions imposed by the NMPRC or PUCT, future growth plans and related capital requirements, and business considerations may also affect TXNM's ability to pay dividends.

**Preferred Stock**

PNM's cumulative preferred shares outstanding bear dividends at 4.58% per annum. PNM preferred stock does not have a mandatory redemption requirement, but may be redeemed, at PNM's option, at 102% of the stated value plus accrued dividends. The holders of the PNM preferred stock are entitled to payment before the holders of common stock in the event of any liquidation or dissolution or distribution of assets of PNM. In addition, PNM's preferred stock is not entitled to a sinking fund and cannot be converted into any other class of stock of PNM.

TXNM and TNMP have no preferred stock outstanding. The authorized shares of TXNM and TNMP preferred stock are 10 million shares and 1 million shares, respectively.

**(7) Financing**

The Company's financing strategy includes both short-term and long-term borrowings. The Company utilizes short-term revolving credit facilities, as well as cash flows from operations, to provide funds for both construction and operating expenditures. Depending on market and other conditions, the Company will periodically sell long-term debt or enter into term loan arrangements and use the proceeds to reduce borrowings under the revolving credit facilities or refinance other debt. Each of the Company's revolving credit facilities, term loans, and other debt agreements contain a single financial covenant that requires the maintenance of a debt-to-capitalization ratio. For the TXNM agreements this ratio must be maintained at less than or equal to 70%, and for the PNM and TNMP agreements this ratio must be maintained at less than or equal to 65%. The Company's revolving credit facilities, term loans, and other debt agreements generally also contain customary covenants, events of default, cross-default provisions, and change-of-control provisions.

PNM must obtain NMPRC approval for any financing transaction having a maturity of more than 18 months. In addition, PNM files its annual informational financing filing and short-term financing plan with the NMPRC.

**Financing Activities**

*TXNM*

At December 31, 2022, TXNM had $1.0 billion outstanding under the TXNM 2021 Delayed-Draw Term Loan, among TXNM, the lenders party thereto, and Wells Fargo Bank, N.A., as administrative agent. As discussed below on June 30, 2023, $500.0 million under the TXNM 2021 Delayed Draw Term Loan was prepaid, without penalty, with proceeds from the TXNM 2023 Term Loan. As discussed below, on June 21, 2024, proceeds from the Convertible Notes were used to prepay, without penalty, $449.0 million under the TXNM 2021 Delayed Draw Term Loan. On May 16, 2025, TXNM paid the remaining $51.0 million due under its TXNM 2021 Delayed Draw Term Loan in accordance with its terms.

Table of Contents

**TXNM ENERGY, INC. AND SUBSIDIARIES**
**PUBLIC SERVICE COMPANY OF NEW MEXICO AND SUBSIDIARIES**
**TEXAS-NEW MEXICO POWER COMPANY AND SUBSIDIARIES**

**NOTES TO CONSOLIDATED FINANCIAL STATEMENTS**
**December 31, 2025, 2024 and 2023**

On November 10, 2022, TXNM entered into a distribution agreement with BofA Securities, Inc., MUFG Securities Americas Inc. and Wells Fargo Securities, LLC, as sales agents, and Bank of America, N.A., MUFG Securities EMEA plc and Wells Fargo Bank, N.A., as forward purchasers, pursuant to which the Company may sell, from time to time, up to an aggregate
sales price of $200.0 million of its common stock, no par value, through the sales agents (the "TXNM 2022 ATM Program"). Sales of the shares made pursuant to the distribution agreement may be made in "at the market offerings" as defined in Rule 415 of the Securities Act. TXNM did not initially receive any proceeds upon the execution of this agreement.

Throughout 2023, TXNM entered into forward sale agreements, for the sale of shares of TXNM common stock. On December 15, 2023, TXNM physically settled the forward purchases under the TXNM 2022 ATM Program and used the proceeds to repay borrowings under the TXNM Revolving Credit Facility and for other corporate purposes. Cash proceeds shown below were reduced by $1.0 million in issuance costs resulting in net cash proceeds of $198.2 million.

| Settlement date | Shares | Settlement price | Settlement amount |
|---|---|---|---|
| | | | (in thousands) |
| March 15, 2023 | 504,452 | $ 49.00 | $ 24,720 |
| March 20, 2023 | 528,082 | 48.78 | 25,758 |
| May 30, 2023 | 244,639 | 47.99 | 11,741 |
| June 30, 2023 | 804,477 | 45.07 | 36,257 |
| September 26, 2023 | 2,283,860 | 44.11 | 100,734 |
| | 4,365,510 | | $ 199,210 |

On June 30, 2023, TXNM entered into the $500.0 million TXNM 2023 Term Loan among TXNM, the lenders party thereto, and Wells Fargo Bank, N.A., as administrative agent. The proceeds were used to prepay an equal amount of the TXNM 2021 Delayed Draw Term Loan, without penalty. As discussed below, on June 21, 2024, proceeds from the Convertible Notes were used to prepay, without penalty, $90.0 million under the TXNM 2023 Term Loan. On June 24, 2025, proceeds from the June 2025 Stock Purchase Agreement were used to prepay, without penalty, $200.0 million under the TXNM 2023 Term Loan. On August 29, 2025, TXNM paid the remaining $210.0 million due under its TXNM 2023 Term Loan in accordance with its terms, which terminated the agreement.

On May 6, 2024, TXNM entered into a distribution agreement with BofA Securities, Inc., Citigroup Global Markets, Inc., MUFG Securities Americas Inc., RBC Capital Markets, LLC, Scotia Capital (USA) Inc., and Wells Fargo Securities, LLC, as sales agents, and Bank of America, N.A., Citibank, N.A., MUFG Securities EMEA plc, Royal Bank of Canada, The Bank of Nova Scotia, and Wells Fargo Bank, N.A., as forward purchasers, pursuant to which the Company may sell, from time to time, up to an aggregate sales amount of $100.0 million of its common stock, no par value, through the sales agents (the "TXNM 2024 ATM Program"). On August 5, 2024, subsequent to approval by shareholders to increase TXNM's authorized shares, the Company amended the distribution agreement increasing the aggregate sales amount from $100.0 million to $300.0 million of its common stock, no par value, that may be sold under the TXNM 2024 ATM Program. Sales of the shares made pursuant to the distribution agreement may be made in "at the market offerings" as defined in Rule 415 of the Securities Act. TXNM did not initially receive any proceeds upon the execution of this agreement.

Throughout 2024, TXNM entered into forward sales agreements for the sale of shares of TXNM common stock. On December 30, 2024, TXNM physically settled forward purchases under the TXNM 2024 ATM Program for 2,458,951 shares and used the proceeds to repay borrowings under the TXNM Revolving Credit Facility. Cash proceeds shown below were reduced by $0.8 million in issuance costs resulting in net cash proceeds of $98.6 million.

| Settlement date | Shares | Settlement price | Settlement amount |
|---|---|---|---|
| | | | (in thousands) |
| May 13, 2024 | 262,025 | $ 38.01 | $ 9,960 |
| August 13, 2024 | 113,014 | 40.21 | 4,545 |
| August 16, 2024 | 261,066 | 40.48 | 10,568 |
| August 23, 2024 | 284,952 | 40.56 | 11,558 |
| August 30, 2024 | 311,583 | 40.64 | 12,661 |
| September 16, 2024 | 1,226,311 | 40.85 | 50,093 |
| | 2,458,951 | | $ 99,385 |

On May 27, 2025, TXNM physically settled all remaining forward purchases under the TXNM 2024 ATM Program for 1,104,641 shares, aggregating net proceeds of $49.6 million, including $0.5 million for equity issuance costs. TXNM used the

Table of Contents



proceeds from the settled shares to repay borrowings under the TXNM Revolving Credit Facility. Following this settlement, no additional shares of TXNM's common stock remain subject to future settlement under the TXNM 2024 ATM Program.

On June 10, 2024, TXNM issued $500.0 million aggregate principal amount of Convertible Notes in a private offering to qualified institutional buyers pursuant to Rule 144A under the Securities Act. The Convertible Notes are unsecured obligations of the Company and rank junior and subordinate in right of payment to the prior payment in full of the Company's existing and future senior indebtedness. The Convertible Notes bear interest at a rate of 5.75% per year, payable semi-annually in arrears on June 1 and December 1, and mature on June 1, 2054, unless earlier converted, redeemed, or repurchased in accordance with their terms. On June 21, 2024, TXNM issued an additional $50.0 million aggregate principal amount of the Convertible Notes, pursuant to an overallotment option granted by TXNM to the initial purchasers of the $500.0 million Convertible Notes. Proceeds from the Convertible Notes were used to prepay $449.0 million of borrowings under the TXNM 2021 Delayed Draw Term Loan and $90.0 million of borrowings under the TXNM 2023 Term Loan, without penalty, and for other corporate purposes.

TXNM may not redeem the Convertible Notes prior to June 6, 2029, except upon the occurrence of certain tax events, rating agency events or treasury stock events (each, a "special event"). TXNM may redeem for cash all, but not less than all, of the Convertibles Notes upon the occurrence of a special event at any time, at its option, at a redemption price equal to 100% of the principal amount of the Convertible Notes to be redeemed, plus accrued and unpaid interest to, but excluding, the redemption date. In addition, TXNM may redeem for cash all or part (subject to certain limitations on partial redemptions) of the Convertible Notes, at its option, on or after June 6, 2029, at a redemption price equal to 100% of the principal amount of the convertible notes to be redeemed, plus accrued and unpaid interest to, but excluding, the redemption date, if the last reported sale price of TXNM's common stock has been at least 130% of the conversion price of the convertible notes then in effect for at least 20 trading days (whether or not consecutive) during any 30 consecutive trading day period (including the last trading day of such period) ending on, and including, the trading day immediately preceding the date on which TXNM provides notice of redemption. In each case, TXNM will not, and will not be permitted to, issue a notice of redemption, or specify a redemption date, during any interest deferral period.

Prior to the close of business on the business day immediately preceding December 1, 2053, the Convertible Notes will be convertible at the option of the holders only under certain conditions. On or after December 1, 2053, until the close of business on the second business day immediately preceding the maturity date, holders may convert all or any portion of their Convertible Notes at their option, at any time, at the conversion rate then in effect, irrespective of these conditions. Upon conversion of the Convertible Notes, TXNM will pay cash, or deliver an equal aggregate principal amount of a newly issued series of its nonconvertible junior subordinated notes with the same terms as the Convertible Notes (other than the conversion features and certain features in relation to redemption rights), in either case, up to the aggregate principal amount of the Convertible Notes being converted, and deliver shares of TXNM's common stock in respect of the remainder, if any, of TXNM's conversion obligation in excess of the aggregate principal amount of the Convertible Notes being converted.

The conversion rate and the corresponding conversion price will be subject to adjustment by certain events such as increased dividends but will not adjust for any accrued or unpaid interest. In addition, following certain corporate events that occur prior to the maturity date of the Convertible Notes or if TXNM delivers a notice of a special event redemption, TXNM will, in certain circumstances, increase the conversion rate for a holder that elects to convert its Convertible Notes in connection with such a corporate event or such notice of special event redemption, as the case may be.

TXNM issued the Convertible Notes pursuant to an indenture dated as of June 10, 2024, between TXNM and Computershare Trust Company, N.A., as trustee. The Convertible Notes are subject to continuing compliance with the representations, warranties, and covenants set forth in the indenture, which include the customary covenants discussed above. In the event of a fundamental change, as defined in the indenture, TXNM may be required to repurchase, for cash, the aggregate principal amount of Convertible Notes plus accrued interest. TXNM may not redeem the Convertible Notes prior to June 6, 2029, except upon the occurrence of a special event as defined in the indenture.

So long as no event of default with respect to the Convertible Notes has occurred and is continuing, TXNM may, at its option, defer interest payments on the Convertible Notes on one or more occasions for up to 20 consecutive semi-annual interest payment periods. During any deferral period, interest on the Convertible Notes will continue to accrue at the then-applicable interest rate on the Convertible Notes. In addition, during any deferral period, interest on deferred interest will accrue at the then-applicable interest rate on the Convertible Notes, compounded semi-annually, to the extent permitted by applicable law.

On January 2, 2026, TXNM notified holders of the Convertible Notes that the Convertible Notes are convertible, at the option of the holders, over a period beginning on January 1, 2026, and ending at the close of business on March 31, 2026, (the

Table of Contents

**TXNM ENERGY, INC. AND SUBSIDIARIES**
**PUBLIC SERVICE COMPANY OF NEW MEXICO AND SUBSIDIARIES**
**TEXAS-NEW MEXICO POWER COMPANY AND SUBSIDIARIES**

**NOTES TO CONSOLIDATED FINANCIAL STATEMENTS**
**December 31, 2025, 2024 and 2023**

"First Quarter 2026 Conversion Period"). The Convertible Notes are convertible at a conversion rate of 22.5248 shares of common stock per $1,000 principal amount of Convertible Notes, which is equivalent to a conversion price of approximately $44.40 per share of common stock. On December 31, 2025, it was determined that the Convertible Notes would become convertible during the First Quarter 2026 Conversion Period because the last reported sale price of TXNM's common stock, for at least 20 trading days during the period of 30 consecutive trading days ending on, and including, the last trading day of the calendar quarter ended December 31, 2025, was greater than or equal to 130% of the conversion price in effect on each applicable trading day.

On May 18, 2025, concurrent with the execution of the Merger Agreement, TXNM entered into the May 2025 Stock Purchase Agreement whereby TXNM sold, in a private placement transaction, 8,000,000 shares of TXNM common stock for a purchase price of $50.00 per share (aggregating $400.0 million). The consummation of the May 2025 Stock Purchase Agreement occurred on June 2, 2025. TXNM used the proceeds to make cash equity contributions to TNMP, to repay borrowings under the TXNM Revolving Credit Facility, and for general corporate purposes.

On May 18, 2025, the execution of the Merger Agreement constituted a "Change of Control" under certain TXNM and TNMP debt agreements. Under each of the specified debt agreements, a "Change of Control" constitutes an "Event of Default," pursuant to which the lender parties thereto had the right to accelerate the indebtedness under the debt agreements. The definition of Change of Control under the PNM debt agreements and PNM note purchase agreements were not triggered by the execution of the Merger Agreement.

On May 23, 2025, TXNM and TNMP entered into amendments in connection with the TXNM Revolving Credit Facility, TXNM 2023 Term Loan, WFB LOC Facility, and TNMP Revolving Credit Facility with the lender parties thereto (the "Lender Consents") to (i) amend the definition of "Change of Control" in such agreements such that the entry into the Merger Agreement would not constitute a Change of Control and (ii) waive the Event of Default arising from entry into the Merger Agreement. On December 19, 2025, in connection with exercising the available extension options (discussed below), TXNM and TNMP entered into amendments in connection with the TXNM Revolving Credit Facility and the TNMP Revolving Credit Facility to amend the definition of Change of Control permitting the closing of the Merger. The Change of Control provisions in the PNM debt agreements will not be triggered by the closing of the Merger.

To ensure sufficient liquidity pending the Lender Consents, on May 18, 2025, TXNM entered into the $910.0 million, 364-day TXNM Merger Backstop Revolving Facility between TXNM, the lenders party thereto, and Wells Fargo Bank, National Association, as administrative agent. The TXNM Merger Backstop Revolving Facility was available to provide liquidity in the event the Company was unable to obtain the Lender Consents. On May 19, 2025, TXNM borrowed approximately $4.0 million under the TXNM Merger Backstop Revolving Facility and subsequently repaid the entire balance by May 21, 2025. The TXNM Merger Backstop Revolving Facility expired according to its terms as TXNM did not make any additional borrowings thereunder by the commitment termination date of May 23, 2025, and the Company was able to obtain the Lender Consents.

On June 24, 2025, TXNM entered into the June 2025 Stock Purchase Agreement whereby TXNM sold, in a private placement transaction, and the purchasers named therein agreed to purchase 3,615,003 shares of TXNM common stock for a purchase price of $55.325 per share (for an aggregate amount of approximately $200 million). The closing of the issuance occurred on June 27, 2025. TXNM used the proceeds to repay an equal amount under the TXNM 2023 Term Loan. TXNM granted the purchasers customary registration rights with respect to the shares, pursuant to which TXNM was required to register such shares for resale with the SEC. On August 8, 2025, TXNM registered the shares for resale.

On August 15, 2025, TXNM entered into a distribution agreement with BofA Securities, Inc., MUFG Securities Americas Inc., RBC Capital Markets, LLC and Scotia Capital (USA) Inc., as sales agents, and Bank of America, N.A., MUFG Securities EMEA plc, Royal Bank of Canada and The Bank of Nova Scotia, as forward purchasers, pursuant to which the Company may sell, from time to time, up to an aggregate sales price of $200.0 million of its common stock, no par value, through the sales agents (the "TXNM 2025 ATM Program"). Sales of the shares made pursuant to the distribution agreement, if any, may be made in "at the market offerings" as defined in Rule 415 of the Securities Act. TXNM did not initially receive any proceeds upon the execution of this agreement.

Beginning on August 15, 2025, TXNM sold, through the sales agents listed above, an aggregate of 3,542,377 shares of TXNM common stock as set forth in the table below and used the proceeds to repay borrowings under the TXNM Revolving Credit Facility and for other corporate purposes.

Table of Contents

**TXNM ENERGY, INC. AND SUBSIDIARIES**
**PUBLIC SERVICE COMPANY OF NEW MEXICO AND SUBSIDIARIES**
**TEXAS-NEW MEXICO POWER COMPANY AND SUBSIDIARIES**

**NOTES TO CONSOLIDATED FINANCIAL STATEMENTS**
**December 31, 2025, 2024 and 2023**

Gross cash proceeds shown below were reduced by $2.0 million in issuance costs resulting in net cash proceeds of $198.0 million.

| Settlement date | Shares | Settlement price | Settlement amount |
|---|---|---|---|
| | | | (in thousands) |
| August 18, 2025 | 209,990 | $ 56.75 | $ 11,917 |
| August 19, 2025 | 18,500 | 56.83 | 1,051 |
| August 19, 2025 | 200,000 | 56.51 | 11,302 |
| August 19, 2025 | 200,000 | 56.41 | 11,282 |
| August 20, 2025 | 1,000,000 | 56.41 | 56,410 |
| August 21, 2025 | 64,016 | 56.57 | 3,621 |
| August 21, 2025 | 1,500,000 | 56.40 | 84,600 |
| August 22, 2025 | 135,327 | 56.58 | 7,657 |
| August 25, 2025 | 41,408 | 56.60 | 2,344 |
| August 25, 2025 | 118,819 | 56.73 | 6,740 |
| August 26, 2025 | 54,317 | 56.64 | 3,076 |
| | 3,542,377 | | $ 200,000 |

On December 10, 2025, TXNM issued $350.0 million aggregate principal amount of its TXNM 2025 Junior Subs pursuant to an indenture between the Company and U.S. Bank Trust Company, National Association, as trustee. The TXNM 2025 Junior Subs are unsecured obligations of the Company and rank junior and subordinate in right of payment to the prior payment in full of the Company's existing and future senior indebtedness. The TXNM 2025 Junior Subs rank equally in right of payment to the Convertible Notes discussed above, bear interest (subject to the Company's right to defer interest payments) at an annual rate of 7.000% per year, payable semi-annually in arrears on January 31 and July 31, and mature on July 31, 2056, unless earlier redeemed. The interest rate is subject to a periodic reset period, as defined in the indenture, to a rate that will not be below 7.000%. Proceeds from the TXNM 2025 Junior Subs were used to fund the cash equity contribution to PNM of $123.3 million, to repay borrowings under the TXNM Revolving Credit Facility, and for other corporate purposes.

TXNM may redeem the TXNM 2025 Junior Subs, at its option, before their maturity, all or part, on one or more occasions on any day in the period commencing 90 days prior to the first interest rate reset date and after the first interest rate reset date on any interest payment date, at a redemption price equal to 100% of the principal amount of the TXNM 2025 Junior Subs to be redeemed, plus accrued and unpaid interest to, but excluding, the redemption date. In addition, TXNM may redeem all, but not less than all of the TXNM 2025 Junior Subs, at a redemption price equal to 100% of the principal amount of the TXNM 2025 Junior Subs to be redeemed, plus accrued and unpaid interest to, but excluding, the redemption date, if certain changes in tax laws, treaties or interpretations occur; may redeem all, but not less than all of the TXNM 2025 Junior Subs, at a redemption price equal to 102% of the principal amount of the TXNM 2025 Junior Subs to be redeemed, plus accrued and unpaid interest to, but excluding, the redemption date, if a rating agency makes certain changes in the equity credit criteria for securities such as the TXNM 2025 Junior Subs.

*PNM*

At December 31, 2022, PNM had $225.0 million outstanding under the PNM 2022 Delayed-Draw Term Loan. On November 15, 2023, upon receipts of funds from the sale of energy transition property to ETBC I discussed below, PNM prepaid the $225.0 million outstanding under the PNM 2022 Delayed-Draw Term Loan, without penalty.

At December 31, 2022, PNM had $130.0 million of 1.10% PCRBs outstanding with a mandatory remarketing date of June 1, 2023, issued by Farmington with a final maturity of June 2040. On June 1, 2023, PNM remarketed the $130.0 million to new investors at 3.90% with a mandatory tender date of June 1, 2028.

At December 31, 2022, PNM had $55.0 million aggregate principal amount of its 3.15% SUNs outstanding due May 2023. On May 15, 2023, PNM repaid the $55.0 million 3.15% SUNs.

On April 28, 2023, PNM entered into the PNM 2023 Note Purchase Agreement with institutional investors for the sale and issuance of $200.0 million aggregate principal amount of two series of the PNM 2023 SUNs offered in private placement transactions. PNM issued $150.0 million of the PNM 2023 SUNs at 5.51%, due April 28, 2035, and another $50.0 million at 5.92%, due April 28, 2053. Proceeds from the PNM 2023 SUNs were used to repay borrowings under the PNM Revolving Credit Facility and the PNM New Mexico Credit Facility, for funding of capital expenditures, and for general corporate

Table of Contents



purposes. The PNM 2023 Note Purchase Agreement includes the customary covenants discussed above. In the event of a change of control, PNM will be required to offer to prepay the PNM 2023 SUNs at par. PNM has the right to redeem any or all of the PNM 2023 SUNs prior to their maturities, subject to payment of a customary make-whole premium.

On May 10, 2024, PNM entered into the $200.0 million PNM 2024 Term Loan, among PNM, the lenders party thereto and U.S. Bank National Association, as administrative agent. PNM used the proceeds of the PNM 2024 Term Loan to repay borrowings under the PNM Revolving Credit Facility, the PNM New Mexico Credit Facility, and for general corporate purposes. On November 10, 2025, the PNM 2024 Term Loan was repaid in accordance with its terms.

At December 31, 2023, PNM had outstanding $37.0 million of 3.00% PCRBs and $125.0 million of 1.15% PCRBs issued by Farmington with a mandatory remarketing date of June 1, 2024 and final maturities of June 2040 and $36.0 million of 3.00% PCRBs issued by Maricopa County, Arizona with a mandatory remarketing date of June 1, 2024 and a final maturity of January 2038. On June 3, 2024, PNM remarketed these PCRBs aggregating $198.0 million to new investors at 3.875% with a mandatory tender date of June 1, 2029.

On January 21, 2025, PNM entered into the $195.0 million PNM 2025 Term Loan, among PNM, the lenders party thereto and Canadian Imperial Bank of Commerce, New York Branch, as administrative agent. PNM used the proceeds of the PNM 2025 Term Loan to repay borrowings under the PNM Revolving Credit Facility, the PNM New Mexico Credit Facility, and for general corporate purposes. The PNM 2025 Term Loan bears interest at a variable rate, which was 4.73% at December 31, 2025, and must be repaid on or before July 21, 2026.

On April 23, 2025, PNM entered into the PNM April 2025 Note Purchase Agreement with institutional investors for the sale and issuance of $300.0 million aggregate principal amount of two series of the PNM April 2025 SUNs offered in private placement transactions. PNM issued $125.0 million of the PNM April 2025 SUNs at 5.75%, due June 1, 2032, and $175.0 million at 6.13%, due June 1, 2037. PNM used proceeds from the PNM April 2025 SUNs for the repayment of existing indebtedness, funding of capital expenditures, and general corporate purposes. The PNM April 2025 Note Purchase Agreement includes the customary covenants discussed above. In the event of a change of control, PNM will be required to offer to prepay the PNM April 2025 SUNs at par. Although there are customary change of control provisions in the PNM debt agreements, the change of control provisions in the agreements, including the PNM April 2025 Note Purchase Agreement, are not triggered by the closing of the Merger. PNM has the right to redeem any or all of the PNM April 2025 SUNs prior to their maturities, subject to payment of a customary make-whole premium.

On July 31, 2025, PNM entered into the PNM July 2025 Note Purchase Agreement with institutional investors for the sale and issuance of $350.0 million aggregate principal amount of two series of the PNM July 2025 SUNs offered in private placement transactions. On July 31, 2025, PNM issued $200.0 million of the PNM July 2025 SUNs at 5.47%, due July 31, 2031, and $150.0 million at 6.03%, due July 31, 2036. PNM used the proceeds from the PNM July 2025 SUNs to repay the PNM $250.0 million SUNs and for general corporate purposes. The PNM July 2025 Note Purchase Agreement includes the customary covenants discussed above. In the event of a change of control, PNM will be required to offer to prepay the PNM July 2025 SUNs at par. Although there are customary change of control provisions in the PNM debt agreements, the change of control provisions in the agreements, including the PNM July 2025 Note Purchase Agreement, will not be triggered by the closing of the Merger. PNM has the right to redeem any or all of the PNM July 2025 SUNs prior to their maturities, subject to payment of a customary make-whole premium.

On November 10, 2025, PNM entered into the $120.0 million PNM November 2025 Term Loan, among PNM, the lenders party thereto and U.S. Bank National Association, as administrative agent. PNM used the proceeds of the PNM November 2025 Term Loan to partially repay borrowings under the PNM 2024 Term Loan. The PNM November 2025 Term Loan bears interest at a variable rate, which was 4.67% at December 31, 2025, and must be repaid on or before May 10, 2027.

At December 31, 2025, PNM had a shelf registration statement, which was set to expire in May 2026, with capacity for the issuance of up to $650.0 million of SUNs. On February 20, 2026, PNM filed a post-effective amendment to the registration statement to deregister any and all securities that remained unsold, effectively terminating all offerings of the securities pursuant to the registration statement.

*ETBC I*

On November 15, 2023, ETBC I issued $343.2 million aggregate principal amount of its senior secured energy transition bonds, Series A (“ETBC I Securitized Bonds”) in two tranches. The first tranche of $175.0 million aggregate principal amount was issued at an interest rate of 5.64% with an expected final payment due in August 2040. The second tranche of $168.2 million aggregate principal amount was issued at an interest rate of 6.03% with an expected final payment due in August 2048. Each tranche is subject to fixed, scheduled, semi-annual payments of principal and interest due on August 15 and

Table of Contents



February 15, with $7.3 million and $6.9 million included as Current installments of long-term debt on the Consolidated Balance Sheets at December 31, 2025 and 2024. The ETBC I Securitized Bonds were offered pursuant to a prospectus dated November 7, 2023, and are governed by an indenture between ETBC I and U.S. Bank Trust Company, National Association, as indenture trustee dated as of November 15, 2023. ETBC I used the proceeds from the issuance of the ETBC I Securitized Bonds to purchase energy transition property (Note 16) from PNM. See Note 10.

*TNMP*

On April 28, 2023, TNMP entered into the TNMP 2023 Bond Purchase Agreement with institutional investors for the sale of $185.0 million aggregate principal amount of two series of the TNMP 2023 Bonds offered in private placement transactions. TNMP issued the first series of $130.0 million on April 28, 2023, at a 5.01% interest rate, due April 28, 2033. The second series of $55.0 million was issued on July 28, 2023, at a 5.47% interest rate, due July 28, 2053. The proceeds were used to repay borrowings under the TNMP Revolving Credit Facility, for funding of capital expenditures, and for other corporate purposes. The TNMP 2023 Bonds are subject to continuing compliance with the representations, warranties and covenants set forth in the supplemental indentures governing the TNMP 2023 Bonds. The terms of the supplemental indentures governing the TNMP 2023 Bonds include the customary covenants discussed above. In the event of a change of control, TNMP will be required to offer to prepay the TNMP 2023 Bonds at par. TNMP has the right to redeem any or all of the TNMP 2023 Bonds prior to their maturity, subject to payment of a customary make-whole premium.

On March 28, 2024, TNMP entered into the TNMP 2024 Bond Purchase Agreement with institutional investors for the sale of $285.0 million aggregate principal amount of four series of the TNMP 2024 Bonds offered in private placement transactions. TNMP issued the first two series on March 28, 2024, consisting of $32.0 million at a 5.26% interest rate, due March 28, 2029, and $85.0 million at a 5.55% interest rate, due March 28, 2036. The third and fourth series were issued on July 1, 2024, consisting of $40.0 million at a 5.65% interest rate, due July 1, 2039, and $128.0 million at a 5.79% interest rate, due July 1, 2054. The proceeds were used to repay existing debt, including the $80.0 million of 4.03% TNMP FMBs that were due July 2024 and borrowings under the TNMP Revolving Credit Facility, for funding of capital expenditures, and for other corporate purposes. The TNMP 2024 Bonds are subject to continuing compliance with the representations, warranties and covenants set forth in the supplemental indentures governing the TNMP 2024 Bonds. The terms of the supplemental indentures governing the TNMP 2024 Bonds include the customary covenants discussed above. In the event of a change of control, TNMP will be required to offer to prepay the TNMP 2024 Bonds at par. TNMP has the right to redeem any or all of the TNMP 2024 Bonds prior to their maturity, subject to payment of a customary make-whole premium.

On February 14, 2025, TNMP entered into the TNMP February 2025 Bond Purchase Agreement with institutional investors for the sale of $140.0 million aggregate principal amount of its 5.19% TNMP February 2025 Bonds offered in private placement transactions. TNMP issued all $140.0 million of the TNMP February 2025 bonds, due April 1, 2031. The proceeds were used to repay borrowings under the TNMP Revolving Credit Facility, for funding of capital expenditures, and for other corporate purposes. The TNMP February 2025 Bonds are subject to continuing compliance with the representations, warranties and covenants set forth in the supplemental indentures governing the TNMP February 2025 Bonds. The terms of the supplemental indentures governing the TNMP February 2025 Bonds include the customary covenants discussed above. In the event of a change of control, TNMP will be required to offer to prepay the TNMP February 2025 Bonds at par. TNMP has the right to redeem any or all of the TNMP February 2025 Bonds prior to their maturity, subject to payment of a customary make-whole premium.

On May 18, 2025, concurrent with the execution of the TXNM Merger Backstop Revolving Facility, TNMP entered into the $1,505.0 million, 364-day TNMP Merger Backstop Term Loan between TNMP, the lenders party thereto, and Wells Fargo Bank, National Association, as administrative agent. The TNMP Merger Backstop Term Loan was available to provide liquidity to repurchase TNMP's FMBs that were tendered for prepayment pursuant to the Offer. On July 21, 2025, TNMP issued the TNMP July 2025 FMBs and used the proceeds to repay the outstanding principal balance under the TNMP Merger Backstop Term Loan on July 22, 2025, terminating that agreement.

The documents governing an aggregate $1,505.0 million of TNMP's outstanding FMBs ("TNMP FMBs") obligated TNMP to offer ("the Offer"), within 30 business days following the signing of the Merger Agreement, to prepay the outstanding TNMP FMBs at 100% of the principal amount, plus accrued and unpaid interest thereon, but without any make-whole amount or other premium. On June 14, 2025, the Offer expired and $1,084.3 million in aggregate principal amount of the bonds were validly tendered. TNMP accepted for purchase all validly tendered bonds. On June 24, 2025, holders whose bonds were validly tendered and accepted for purchase received 100% of the aggregate principal amount of bonds prepaid plus accrued and unpaid interest using funds drawn under the TNMP Merger Backstop Term Loan, discussed above. On November 6, 2025, TNMP entered into an agreement and supplemental indenture to amend the documents governing $417.7 million of TNMP FMBs. The supplemental indenture amends the requirement for TNMP to provide certain financial reports and amends

Table of Contents

**TXNM ENERGY, INC. AND SUBSIDIARIES**
**PUBLIC SERVICE COMPANY OF NEW MEXICO AND SUBSIDIARIES**
**TEXAS-NEW MEXICO POWER COMPANY AND SUBSIDIARIES**

**NOTES TO CONSOLIDATED FINANCIAL STATEMENTS**
**December 31, 2025, 2024 and 2023**

the definition of change of control such that TNMP will no longer be required to make an offer to prepay the aggregate $417.7 million TNMP FMBs upon closing of the Merger.

The documents governing an aggregate $3.0 million of TNMP FMBs still require TNMP to make another offer, within 30 business days of closing of the Merger, to prepay the remaining outstanding TNMP FMBs, totaling $3.0 million, at par. TNMP will make such offer to prepay the TNMP FMBs in accordance with the terms of the TNMP FMBs; however, holders of the TNMP FMBs are not required to tender their TNMP FMBs and may accept or reject such offer to prepay.

The information in this Form 10-K is for informational purposes only and is neither an offer to purchase, nor a solicitation of an offer to sell, subscribe for or buy any securities in any jurisdiction pursuant to the proposed transactions or otherwise, nor shall there be any sale, issuance or transfer of securities in any jurisdiction in contravention of applicable law. Similar to the offer to prepay made after signing the Merger Agreement, the post-Merger closing offer to prepay the TNMP FMBs will be made only pursuant to an offer to prepay, which will set forth the terms and conditions of the offer to prepay.

On July 21, 2025, TNMP entered into the TNMP July 2025 Bond Purchase Agreement with institutional investors for the sale of $1,084.3 million aggregate principal amount of six series of the TNMP July 2025 FMBs offered in private placement transactions. TNMP issued the TNMP July 2025 FMBs on July 21, 2025, with the following terms:

| Principal Amount | Interest Rate | Due Date |
|---|---|---|
| (in thousands) | | |
| $ 245,000 | 4.83 % | July 31, 2030 |
| 245,000 | 5.12 | July 31, 2032 |
| 240,000 | 5.44 | July 31, 2035 |
| 100,000 | 5.54 | July 31, 2037 |
| 154,300 | 5.93 | July 31, 2045 |
| 100,000 | 6.02 | July 31, 2055 |
| $ 1,084,300 | | |

The proceeds were used to repay borrowings under the TNMP Merger Backstop Term Loan. The TNMP July 2025 FMBs are subject to continuing compliance with the representations, warranties, and covenants set forth in the governing supplemental indentures. In the event of certain changes of control of TNMP, TNMP will be required to offer to prepay the TNMP July 2025 FMBs at par. Although there are customary change of control provisions in the TNMP July 2025 FMBs, the change of control provisions will not be triggered by the closing of the Merger. TNMP has the right to redeem any or all of the TNMP July 2025 FMBs prior to their maturity, subject to payment of a customary make-whole premium.

On November 18, 2025, TNMP entered into the TNMP November 2025 Bond Purchase Agreement with institutional investors for the sale of $70.0 million aggregate principal amount of its 4.69% TNMP November 2025 FMBs offered in private placement transactions. On December 18, 2025, TNMP issued all $70.0 million at a 4.69% interest rate, due December 18, 2031. The proceeds were used to repay borrowings under the TNMP Revolving Credit Facility, for funding of capital expenditures, and for other corporate purposes. The TNMP November 2025 FMBs are subject to continuing compliance with the representations, warranties, and covenants set forth in the governing supplemental indentures. In the event of certain changes of control of TNMP, TNMP will be required to offer to prepay the TNMP November 2025 FMBs at par. Although there are customary change of control provisions in the TNMP November 2025 FMBs, the change of control provisions will not be triggered by the closing of the Merger. TNMP has the right to redeem any or all of the TNMP November 2025 FMBs prior to their maturity, subject to payment of a customary make-whole premium.

*Hedging Activities*

On June 30, 2025, TXNM executed a series of treasury lock agreements, with terms ranging from 5 years to 30 years, aggregating a total notional amount of $730.0 million to reduce interest rate exposure on the TNMP July 2025 FMBs that were issued in July 2025. The treasury lock agreements had an average fixed rate of 4.18% and TXNM designated them as cash flow hedges, measured at fair value, which was recorded as a loss of $2.5 million in Other current liabilities at June 30, 2025. Fair values, provided by an external pricing service, were determined using Level 2 inputs of quoted prices for similar agreements in active markets. On July 1, 2025, TXNM terminated all of the treasury lock agreements, realizing a pre-tax net loss of $1.6 million recorded in Accumulated other comprehensive income. The loss will be amortized through interest expense over a range of 5 to 30 years, in accordance with the terms of the TNMP July 2025 FMBs issued July 21, 2025.

Table of Contents

**TXNM ENERGY, INC. AND SUBSIDIARIES**
**PUBLIC SERVICE COMPANY OF NEW MEXICO AND SUBSIDIARIES**
**TEXAS-NEW MEXICO POWER COMPANY AND SUBSIDIARIES**

**NOTES TO CONSOLIDATED FINANCIAL STATEMENTS**
**December 31, 2025, 2024 and 2023**

TXNM entered into hedging agreements that establish a fixed rate for the indicated amount of variable rate debt, above which a customary spread is applied, which is subject to change if there is a change in TXNM's credit rating. As of January 1, 2024, TXNM's hedging agreements were as follows:

| Effective Date | Maturity Date | Variable Rate Debt Hedged | Established Fixed Rate |
|---|---|---|---|
| | | (In millions) | (Percent) |
| January 1, 2024 | December 31, 2024 | $ 100.0 | 3.32 % |
| January 1, 2024 | December 31, 2024 | 100.0 | 3.32 |
| January 1, 2024 | December 31, 2024 | 100.0 | 3.38 |
| January 1, 2024 | December 31, 2024 | 150.0 | 3.62 |
| January 1, 2024 | December 31, 2024 | 150.0 | 3.57 |
| January 1, 2025 | December 31, 2025 | 100.0 | 4.18 |
| January 1, 2025 | December 31, 2025 | 100.0 | 4.18 |
| January 1, 2025 | December 31, 2025 | 100.0 | 3.99 |

These hedging agreements were accounted for as cash flow hedges. In November 2024, TXNM unwound and settled the $300.0 million of hedging agreements that were expected to mature on December 31, 2025, and on December 31, 2024, the remaining $600.0 million of hedging agreements matured. TXNM had no remaining active hedging agreements at December 31, 2025 or 2024.

**Borrowing Arrangements Between TXNM and its Subsidiaries**

TXNM has intercompany loan agreements with its subsidiaries. Individual subsidiary loan agreements vary in amount up to $150.0 million and have either reciprocal or non-reciprocal terms. Interest charged to the subsidiaries is equivalent to interest paid by TXNM on its short-term borrowings or the money-market interest rate if TXNM does not have any short-term borrowings outstanding. All balances outstanding under intercompany loan agreements are eliminated upon consolidation. See Note 1. PNM and TNMP had no borrowings from TXNM at December 31, 2025 and 2024. PNMR Development had $15.9 million and zero in short-term borrowings outstanding from TXNM at December 31, 2025 and 2024. TXNM had zero and $1.5 million in short-term borrowings outstanding from PNMR Development at December 31, 2025 and 2024.

**Short-term Debt and Liquidity**

As of December 31, 2025, the TXNM Revolving Credit Facility had a financing capacity of $300.0 million, and the PNM Revolving Credit Facility had a financing capacity of $400.0 million. On April 1, 2024, TXNM and PNM amended their respective revolving credit facilities, extending their maturity to March 30, 2029, with two one-year extension options that, if exercised, would extend the maturity to March 2031, subject to approval by a majority of the lenders. On December 19, 2025, the first of these one-year extension options was exercised, extending the maturities to March 29, 2030, however, one lender in each of the revolving credit facilities failed to agree to the extension. As a result, effective March 30, 2029, the TXNM Revolving Credit Facility capacity will adjust to $265.4 million, and the PNM Revolving Credit Facility capacity will adjust to $354.1 million. PNM also has the $40.0 million PNM New Mexico Credit Facility with a maturity of May 20, 2026. On July 25, 2025, PNM amended its PNM New Mexico Credit Facility to, among other things, extend the maturity from May 20, 2026 to May 31, 2030. As of December 31, 2023, the TNMP Revolving Credit Facility had a capacity of $100.0 million, secured by $100.0 million aggregate principal amount of TNMP first mortgage bonds. On April 1, 2024, TNMP entered into a new $200.0 million Revolving Credit Facility that replaced the $100.0 million Revolving Credit Facility. That new $200.0 million Revolving Credit Facility was secured by $200.0 million aggregate principal amount of TNMP first mortgage bonds and had a maturity of March 30, 2029, with two one-year extension options that, if exercised, would extend the maturity to March 2031, subject to approval by a majority of the lenders. On December 19, 2025, TNMP amended the TNMP Revolving Credit Facility to increase the capacity to $300.0 million, secured by $300.0 million aggregate principal amount of TNMP first mortgage bonds, and exercised the first of two one-year extension options, extending the maturity to March 29, 2030. One lender failed to agree to the extension and as a result, effective March 30, 2029, the TNMP Revolving Credit Facility capacity will adjust to $277.0 million. Variable interest rates under the TXNM, PNM, and TNMP revolving credit facilities are based on SOFR.

Table of Contents

**TXNM ENERGY, INC. AND SUBSIDIARIES**
**PUBLIC SERVICE COMPANY OF NEW MEXICO AND SUBSIDIARIES**
**TEXAS-NEW MEXICO POWER COMPANY AND SUBSIDIARIES**

**NOTES TO CONSOLIDATED FINANCIAL STATEMENTS**
**December 31, 2025, 2024 and 2023**

Short-term debt outstanding consists of:

| Short-term Debt | December 31, 2025 | December 31, 2024 |
|---|---|---|
| | (In thousands) | |
| PNM: | | |
| PNM Revolving Credit Facility | $ 138,800 | $ 323,800 |
| PNM New Mexico Credit Facility | 40,000 | 40,000 |
| | 178,800 | 363,800 |
| TNMP Revolving Credit Facility | — | 151,600 |
| TXNM Revolving Credit Facility | 2,600 | 93,900 |
| | $ 181,400 | $ 609,300 |

In addition to the above borrowings, TXNM, PNM, and TNMP had letters of credit outstanding of $3.1 million, zero, and zero at December 31, 2025, that reduce the available capacity under their respective revolving credit facilities. TXNM also had $19.3 million of letters of credit outstanding under the WFB LOC Facility. At December 31, 2025, interest rates on outstanding borrowings were 5.04% for the PNM Revolving Credit Facility, 5.08% for the PNM New Mexico Credit Facility, and 5.16% for the TXNM Revolving Credit Facility. There were no borrowings outstanding under the TNMP Revolving Credit Facility at December 31, 2025.

**Long-Term Debt**

Information concerning long-term debt outstanding and unamortized (premiums), discounts, and debt issuance costs is as follows:

| | December 31, 2025 | | December 31, 2024 | |
|---|---|---|---|---|
| | Principal | Unamortized Discounts, (Premiums), and Issuance Costs, net | Principal | Unamortized Discounts, (Premiums), and Issuance Costs, net |
| | | (In thousands) | | |
| **PNM Debt** | | | | |
| ETBC I - Senior Secured Energy Transition Bonds | | | | |
| Series A-1, 5.64% | $ 165,565 | $ 961 | $ 172,471 | $ 1,025 |
| Series A-2, 6.03% | 168,200 | 968 | 168,200 | 1,014 |
| Senior Unsecured Notes, Pollution Control Revenue Bonds: | | | | |
| 2.15% due April 2033 | 146,000 | 646 | 146,000 | 736 |
| 0.875% mandatory tender - October 1, 2026 | 100,345 | 110 | 100,345 | 257 |
| 3.90% due June 2040, mandatory tender - June 1, 2028 | 130,000 | 563 | 130,000 | 796 |
| 3.875% due June 2040, mandatory tender - June 1, 2029 | 162,000 | 903 | 162,000 | 1,158 |
| 3.875% due January 2038, mandatory tender - June 1, 2029 | 36,000 | 201 | 36,000 | 258 |
| Senior Unsecured Notes: | | | | |
| 3.45% due May 2025 | — | — | 104,000 | 39 |
| 3.85% due August 2025 | — | — | 250,000 | 174 |
| 3.68% due May 2028 | 88,000 | 147 | 88,000 | 209 |
| 3.78% due August 2028 | 15,000 | 27 | 15,000 | 38 |
| 3.93% due May 2033 | 38,000 | 131 | 38,000 | 149 |
| 4.22% due May 2038 | 45,000 | 196 | 45,000 | 212 |
| 4.50% due May 2048 | 20,000 | 105 | 20,000 | 110 |
| 4.60% due August 2048 | 85,000 | 450 | 85,000 | 470 |
| 3.21% due April 2030 | 150,000 | 692 | 150,000 | 852 |
| 3.57% due April 2039 | 50,000 | 370 | 50,000 | 398 |
| 2.59% due July 2033 | 80,000 | 289 | 80,000 | 328 |
| 3.14% due July 2041 | 80,000 | 358 | 80,000 | 381 |
| 2.29% due December 2031 | 50,000 | 176 | 50,000 | 205 |
| 2.97% due December 2041 | 100,000 | 469 | 100,000 | 499 |
| 5.51% due April 2035 | 150,000 | 703 | 150,000 | 779 |

Table of Contents

**TXNM ENERGY, INC. AND SUBSIDIARIES**
**PUBLIC SERVICE COMPANY OF NEW MEXICO AND SUBSIDIARIES**
**TEXAS-NEW MEXICO POWER COMPANY AND SUBSIDIARIES**

**NOTES TO CONSOLIDATED FINANCIAL STATEMENTS**
**December 31, 2025, 2024 and 2023**

| | December 31, 2025 | | December 31, 2024 | |
|---|---|---|---|---|
| | Principal | Unamortized Discounts, (Premiums), and Issuance Costs, net | Principal | Unamortized Discounts, (Premiums), and Issuance Costs, net |
| **PNM Debt (Continued)** | | (In thousands) | | |
| 5.92% due April 2053 | 50,000 | 270 | 50,000 | 280 |
| 5.75% due June 2032 | 125,000 | 627 | — | — |
| 6.13% due June 2037 | 175,000 | 915 | — | — |
| 6.03% due July 2036 | 150,000 | 810 | — | — |
| 5.47% due July 2031 | 200,000 | 1,041 | — | — |
| PNM 2024 $200.0 Million Term Loan due November 2025 | — | — | 200,000 | 57 |
| PNM 2025 $195.0 Million Term Loan due July 2026 | 195,000 | — | — | — |
| PNM 2025 $120.0 Million Term Loan due May 2027 | 120,000 | 85 | — | — |
| | 2,874,110 | 12,213 | 2,470,016 | 10,424 |
| Less current maturities | 302,648 | 110 | 560,907 | 270 |
| | 2,571,462 | 12,103 | 1,909,109 | 10,154 |
| **TNMP Debt** | | | | |
| First Mortgage Bonds: | | | | |
| 6.95% due April 2043 | 93,198 | (12,340) | 93,198 | (13,056) |
| 3.53% due February 2026 | — | | 60,000 | 91 |
| 3.22% due August 2027 | — | | 60,000 | 152 |
| 3.85% due June 2028 | — | | 60,000 | 219 |
| 3.79% due March 2034 | — | | 75,000 | 347 |
| 3.92% due March 2039 | 26,900 | 135 | 75,000 | 401 |
| 4.06% due March 2044 | 19,600 | 108 | 75,000 | 433 |
| 3.60% due July 2029 | 1,000 | 3 | 80,000 | 270 |
| 2.73% due April 2030 | 2,000 | 9 | 85,000 | 445 |
| 3.36% due April 2050 | 1,900 | 15 | 25,000 | 210 |
| 2.93% due July 2035 | 6,000 | 38 | 25,000 | 175 |
| 3.36% due July 2050 | 1,300 | 11 | 50,000 | 424 |
| 2.44% due August 2035 | — | | 65,000 | 382 |
| 4.13% due May 2052 | 45,000 | 274 | 65,000 | 409 |
| 3.81% due July 2032 | 2,000 | 9 | 95,000 | 505 |
| 5.01% due April 2033 | 44,000 | 183 | 130,000 | 610 |
| 5.47% due July 2053 | 11,000 | 55 | 55,000 | 286 |
| 5.26% due March 2029 | 32,000 | 145 | 32,000 | 189 |
| 5.55% due March 2036 | 40,000 | 233 | 85,000 | 538 |
| 5.65% due July 2039 | 40,000 | 238 | 40,000 | 256 |
| 5.79% due July 2054 | 48,000 | 303 | 128,000 | 833 |
| 5.19% due April 2031 | 100,000 | 588 | — | — |
| 4.83% due July 2030 | 245,000 | 1,183 | — | — |
| 5.12% due July 2032 | 245,000 | 1,209 | — | — |
| 5.44% due July 2035 | 240,000 | 1,203 | — | — |
| 5.54% due July 2037 | 100,000 | 504 | — | — |
| 5.93% due July 2045 | 154,300 | 787 | — | — |
| 6.02% due July 2055 | 100,000 | 513 | — | — |
| 4.69% due December 2031 | 70,000 | 525 | — | — |
| | 1,668,198 | (4,069) | 1,458,198 | (5,881) |
| Less current maturities | — | — | — | — |
| | 1,668,198 | (4,069) | 1,458,198 | (5,881) |

Table of Contents

**TXNM ENERGY, INC. AND SUBSIDIARIES**
**PUBLIC SERVICE COMPANY OF NEW MEXICO AND SUBSIDIARIES**
**TEXAS-NEW MEXICO POWER COMPANY AND SUBSIDIARIES**

**NOTES TO CONSOLIDATED FINANCIAL STATEMENTS**
**December 31, 2025, 2024 and 2023**

| | December 31, 2025 | | December 31, 2024 | |
|---|---|---|---|---|
| | Principal | Unamortized Discounts, (Premiums), and Issuance Costs, net | Principal | Unamortized Discounts, (Premiums), and Issuance Costs, net |
| | (In thousands) | | | |
| **TXNM Debt** | | | | |
| TXNM 2021 Delayed-Draw Term Loan due May 2025 | — | — | 51,000 | 34 |
| TXNM 2023 Term Loan due June 2026 | — | — | 410,000 | 441 |
| 5.75% TXNM Junior Subordinated Convertible Notes due June 2054 | 550,000 | 11,514 | 550,000 | 10,828 |
| 7.00% TXNM 2025 Junior Subordinated Notes due July 2056 | 350,000 | 4,086 | — | — |
| | 900,000 | 15,600 | 1,011,000 | 11,303 |
| Less current maturities | — | — | 51,000 | 34 |
| | 900,000 | 15,600 | 960,000 | 11,269 |
| **Total Consolidated TXNM Debt** | 5,442,308 | 23,744 | 4,939,214 | 15,846 |
| Less current maturities | 302,648 | 110 | 611,907 | 304 |
| | $ 5,139,660 | $ 23,634 | $ 4,327,307 | $ 15,542 |

Reflecting mandatory tender dates, long-term debt maturities as of December 31, 2025, are follows:

| | TXNM | PNM | TNMP | TXNM Consolidated |
|---|---|---|---|---|
| | | (In thousands) | | |
| 2026 | $ — | $ 302,648 | $ — | $ 302,648 |
| 2027 | — | 127,721 | — | 127,721 |
| 2028 | — | 241,162 | — | 241,162 |
| 2029 | — | 206,629 | 33,000 | 239,629 |
| 2030 | — | 159,123 | 247,000 | 406,123 |
| Thereafter | 900,000 | 1,836,827 | 1,388,198 | 4,125,025 |
| Total | $ 900,000 | $ 2,874,110 | $ 1,668,198 | $ 5,442,308 |

**(8) Lease Commitments**

The Company enters into various lease agreements to meet its business needs and to satisfy the needs of its customers. The Company accounts for contracts that convey the use and control of identified assets for a period of time as leases. The Company classifies leases as operating or financing by evaluating the terms of the lease agreement. Agreements under which the Company is likely to utilize substantially all of the economic value or life of the asset or that the Company is likely to own at the end of the lease term, either through purchase or transfer of ownership, are classified as financing leases. Leases not meeting these criteria are accounted for as operating leases. Agreements under which the Company is a lessor are insignificant. TXNM, PNM, and TNMP determine present value for their leases using their incremental borrowing rates at the commencement date of the lease or, when readily available, the rate implicit in the agreement. The Company leases office buildings, vehicles, energy storage facilities, and other equipment. In addition, PNM had lease interests in PVNGS and certain rights-of-way agreements that are classified as leases. All of the Company's leases with fixed-payment terms in excess of one year are recorded on the Consolidated Balance Sheets by recording a present value lease liability and a corresponding right-of-use asset. Operating lease expense is recognized within operating expenses according to the use of the asset on a straight-line basis. Financing lease costs, which are comprised primarily of fleet and office equipment leases commencing after January 1, 2019, are recognized by amortizing the right-of-use asset on a straight-line basis and by recording interest expense on the lease liability. Financing lease right-of-use assets amortization is reflected in depreciation and amortization and interest on financing lease liabilities is reflected as interest charges on the Company's Consolidated Statements of Earnings.

*PVNGS*

In 1985 and 1986, PNM entered into leases for its interest in PVNGS Unit 1 and 2. The leases initially were scheduled to expire in January 2015 for four Unit 1 leases and January 2016 for four Unit 2 leases. Following procedures set forth in the

Table of Contents



PVNGS leases, PNM notified four of the lessors under the Unit 1 leases and one lessor under the Unit 2 lease that it would elect to renew those leases on the expiration date of the original leases. The four Unit 1 leases expired in January 2023 and the one Unit 2 lease expired in January 2024. PNM has no further lease payments related to PVNGS Unit 1 or 2.

On April 5, 2021, PNM and Salt River Project entered into an Asset Purchase and Sale Agreement, pursuant to which PNM agreed to sell to Salt River Project certain PNM-owned assets and nuclear fuel necessary to the ongoing operation and maintenance of leased capacity in PVNGS Unit 1 and Unit 2. In January 2023, the Unit 1 leases expired, and PNM closed on the associated sale to Salt River Project, receiving payments of $33.7 million, of which $28.4 million was recorded as a reduction to Net utility plant on the Consolidated Balance Sheets and is presented as cash flows from investing activities on the Consolidated Statement of Cash Flows. In addition, $5.3 million was recorded as a reduction to materials, supplies, and fuel stock on the Consolidated Balance Sheets and is presented as cash flows from operating activities on the Consolidated Statement of Cash Flows. In January 2024, the Unit 2 leases expired, and PNM closed on the associated sale to Salt River Project, receiving payments of $3.4 million, of which $2.8 million was recorded as a reduction to Net utility plant on the Consolidated Balance Sheets and is presented as cash flows from investing activities on the Consolidated Statement of Cash Flows. In addition, $0.6 million was recorded as a reduction to Materials, supplies and fuel stock on the Consolidated Balance Sheets and is presented as cash flows from operating activities on the Consolidated Statement of Cash Flows.

*Land Easements and Rights-of-Ways*

Many of PNM's electric transmission and distribution facilities are located on lands that require the grant of rights-of-way from governmental entities, Native American tribes, or private parties. PNM has completed several renewals of rights-of-way, the largest of which is a renewal with the Navajo Nation. PNM is obligated to pay the Navajo Nation annual payments of $6.0 million, subject to adjustment each year based on the Consumer Price Index, through 2029. PNM's April 2025 payment for the amount due under the Navajo Nation right-of-way lease was $8.8 million, which included amounts due under the Consumer Price Index adjustment. Changes in the Consumer Price Index subsequent to January 1, 2019, are considered variable lease payments.

PNM has other prepaid rights-of-way agreements that are not accounted for as leases or recognized as a component of plant in service. PNM reflects the unamortized balance of these prepayments in other deferred charges on the Consolidated Balance Sheets and recognizes amortization expense associated with these agreements in the Consolidated Statement of Earnings over their term. As of December 31, 2025 and 2024, the unamortized balance of these rights-of-ways was $69.2 million and $67.1 million. During the years ended December 31, 2025, 2024, and 2023, PNM recognized amortization expense associated with these agreements of $4.5 million, $4.3 million, and $3.5 million.

*Fleet Vehicles and Equipment*

Fleet vehicle and equipment leases commencing on or after January 1, 2019, are classified as financing leases. Fleet vehicle and equipment leases existing as of December 31, 2018, are classified as operating leases. The Company's fleet vehicle and equipment lease agreements include non-lease components for insignificant administrative and other costs that are billed over the life of the agreement. At December 31, 2025, residual value guarantees on fleet vehicle and equipment leases are $0.7 million, $0.5 million, and $1.2 million for PNM, TNMP, and TXNM Consolidated.

*Energy Storage Agreements*

The Company has ESAs with fixed payments over the life of the agreements, that are accounted for as operating leases, for which the Company records the initial lease liabilities and corresponding right-of-use assets. In the third quarter of 2025, an energy storage facility with an aggregate capacity of 50 MW began commercial operation and PNM recorded lease liabilities with a corresponding right-of-use asset of $57.8 million. The Company also has ESAs with monthly payments that vary, depending on the available capacity of the energy storage facility, that are also accounted for as operating leases. However, due to the variable nature of the consideration, these agreements do not require a lease liability or a right-of-use asset to be recorded upon inception. Expenses for this type of lease are reflected in variable lease expense in the tables below. During the fourth quarter of 2025, two existing fixed payment ESAs were amended to variable payments based on available capacity, resulting in a $208 million retirement of unamortized right-of-use assets and associated lease liabilities. In addition, the Company has elected to separate lease components from non-lease components for ESAs and accordingly does not include non-lease components in the measurement of the lease liability or right-of-use asset. The non-lease components which are not included in the measurement of the lease liability or the corresponding right-of-use asset, comprises of 25.5% of the value of the agreements.

Table of Contents

**TXNM ENERGY, INC. AND SUBSIDIARIES**
**PUBLIC SERVICE COMPANY OF NEW MEXICO AND SUBSIDIARIES**
**TEXAS-NEW MEXICO POWER COMPANY AND SUBSIDIARIES**

**NOTES TO CONSOLIDATED FINANCIAL STATEMENTS**
**December 31, 2025, 2024 and 2023**

Information related to the Company's operating leases recorded on the Consolidated Balance Sheets is presented below:

| | December 31, 2025 | | | December 31, 2024 | | |
|---|---|---|---|---|---|---|
| | PNM | TNMP | TXNM Consolidated | PNM | TNMP | TXNM Consolidated |
| | (In thousands) | | | | | |
| Operating leases: | | | | | | |
| Operating lease assets, net of amortization | $ 107,986 | $ 39 | $ 108,517 | $ 271,433 | $ 923 | $ 272,894 |
| Current portion of operating lease liabilities | 8,913 | 15 | 8,969 | 13,542 | 713 | 14,293 |
| Long-term portion of operating lease liabilities | 96,246 | 24 | 96,735 | 254,702 | 167 | 255,376 |

As discussed above, the Company classifies its fleet vehicle and equipment leases and its office equipment leases commencing on or after January 1, 2019, as financing leases.

Information related to the Company's financing leases recorded on the Consolidated Balance Sheets is presented below:

| | December 31, 2025 | | | December 31, 2024 | | |
|---|---|---|---|---|---|---|
| | PNM | TNMP | TXNM Consolidated | PNM | TNMP | TXNM Consolidated |
| | (In thousands) | | | | | |
| Financing leases: | | | | | | |
| Non-utility property | $ 30,555 | $ 33,344 | $ 65,366 | $ 24,548 | $ 24,420 | $ 50,144 |
| Accumulated depreciation | (13,079) | (14,319) | (27,928) | (10,997) | (13,411) | (24,604) |
| Non-utility property, net | $ 17,476 | $ 19,025 | $ 37,438 | $ 13,551 | $ 11,009 | $ 25,540 |
| Other current liabilities | $ 5,764 | $ 6,604 | $ 12,743 | $ 4,311 | $ 4,527 | $ 9,126 |
| Other deferred credits | 11,740 | 12,456 | 24,786 | 9,262 | 6,504 | 16,470 |

Information concerning the weighted average remaining lease terms and the weighted average discount rates used to determine the Company's lease liabilities is presented below:

| | December 31, 2025 | | | December 31, 2024 | | |
|---|---|---|---|---|---|---|
| | PNM | TNMP | TXNM Consolidated | PNM | TNMP | TXNM Consolidated |
| Weighted average remaining lease term (years): | | | | | | |
| Operating leases | 15.64 | 2.63 | 15.60 | 17.52 | 1.10 | 17.45 |
| Financing leases | 3.75 | 3.48 | 3.59 | 3.51 | 2.80 | 3.20 |
| Weighted average discount rate: | | | | | | |
| Operating leases | 5.55 % | 5.39 % | 5.55 % | 5.68 % | 4.41 % | 5.68 % |
| Financing leases | 5.33 | 5.43 | 5.37 | 5.08 | 5.19 | 5.12 |

Table of Contents

**TXNM ENERGY, INC. AND SUBSIDIARIES**
**PUBLIC SERVICE COMPANY OF NEW MEXICO AND SUBSIDIARIES**
**TEXAS-NEW MEXICO POWER COMPANY AND SUBSIDIARIES**

**NOTES TO CONSOLIDATED FINANCIAL STATEMENTS**
**December 31, 2025, 2024 and 2023**

Information for the components of lease expense is as follows:

| | Year Ended December 31, 2025 | | |
|---|---|---|---|
| | PNM | TNMP | TXNM Consolidated |
| | (In thousands) | | |
| Operating lease cost: | | | |
| Energy storage leases | $ 21,972 | $ — | $ 21,972 |
| Other operating leases | 7,441 | 434 | 7,950 |
| Amounts capitalized | (33) | (339) | (372) |
| Total operating lease expense | 29,380 | 95 | 29,550 |
| Financing lease cost: | | | |
| Amortization of right-of-use assets | 5,132 | 6,227 | 11,720 |
| Interest on lease liabilities | 785 | 821 | 1,659 |
| Amounts capitalized | (3,856) | (5,859) | (9,715) |
| Total financing lease expense | 2,061 | 1,189 | 3,664 |
| Variable lease expense | 27,629 | — | 27,629 |
| Short-term lease expense | 721 | 25 | 848 |
| Total lease expense for the period | $ 59,791 | $ 1,309 | $ 61,691 |

| | Year Ended December 31, 2024 | | |
|---|---|---|---|
| | PNM | TNMP | TXNM Consolidated |
| | (In thousands) | | |
| Operating lease cost | | | |
| Energy storage leases | $ 13,353 | $ — | $ 13,353 |
| Other operating leases | 7,722 | 907 | 8,679 |
| Amounts capitalized | (101) | (793) | (894) |
| Total operating lease expense | 20,974 | 114 | 21,138 |
| Financing lease cost: | | | |
| Amortization of right-of-use assets | 4,554 | 5,129 | 9,889 |
| Interest on lease liabilities | 603 | 595 | 1,229 |
| Amounts capitalized | (3,227) | (4,648) | (7,875) |
| Total financing lease expense | 1,930 | 1,076 | 3,243 |
| Variable lease expense | 3,900 | — | 3,900 |
| Short-term lease expense | 714 | 23 | 787 |
| Total lease expense for the period | $ 27,518 | $ 1,213 | $ 29,068 |

Table of Contents

**TXNM ENERGY, INC. AND SUBSIDIARIES**
**PUBLIC SERVICE COMPANY OF NEW MEXICO AND SUBSIDIARIES**
**TEXAS-NEW MEXICO POWER COMPANY AND SUBSIDIARIES**

**NOTES TO CONSOLIDATED FINANCIAL STATEMENTS**
**December 31, 2025, 2024 and 2023**

| | Year Ended December 31, 2023 | | |
|---|---|---|---|
| | PNM | TNMP | TXNM Consolidated |
| | (In thousands) | | |
| Operating lease cost | | | |
| Energy Storage leases | $ 4,351 | $ — | $ 4,351 |
| Other operating leases | 11,127 | 1,479 | 12,606 |
| Amounts capitalized | (374) | (1,298) | (1,672) |
| Total operating lease expense | 15,104 | 181 | 15,285 |
| Financing lease cost: | | | |
| Amortization of right-of-use assets | 4,566 | 4,634 | 9,253 |
| Interest on lease liabilities | 562 | 497 | 1,060 |
| Amounts capitalized | (3,190) | (4,250) | (7,440) |
| Total financing lease expense | 1,938 | 881 | 2,873 |
| Variable lease expense | 1,342 | — | 1,342 |
| Short-term lease expense | 675 | 29 | 782 |
| Total lease expense for the period | $ 19,059 | $ 1,091 | $ 20,282 |

Supplemental cash flow information related to the Company's leases is as follows:

| | Year Ended December 31, 2025 | | | Year Ended December 31, 2024 | | |
|---|---|---|---|---|---|---|
| | PNM | TNMP | TXNM Consolidated | PNM | TNMP | TXNM Consolidated |
| | (In thousands) | | | | | |
| Cash paid for amounts included in the measurement of lease liabilities: | | | | | | |
| Operating cash flows from operating leases | $ 29,018 | $ 63 | $ 29,147 | $ 21,277 | $ 47 | $ 21,368 |
| Operating cash flows from financing leases | 270 | 185 | 507 | 206 | 102 | 340 |
| Financing cash flows from financing leases | 1,783 | 1,007 | 3,137 | 1,707 | 971 | 2,872 |
| Non-cash information related to right-of-use assets obtained or retired in exchange for lease obligations: | | | | | | |
| Operating leases additions | $ 57,923 | $ 9 | $ 57,932 | $ 101,594 | $ 100 | $ 102,261 |
| Operating leases retirements | (207,774) | (475) | (208,249) | 38 | (138) | (117) |
| Financing leases additions | 9,182 | 14,360 | 23,861 | 4,962 | 3,715 | 9,850 |

Capitalized lease costs are reflected as investing activities on the Company's Consolidated Statements of Cash Flows for the twelve months ended December 31, 2025 and 2024.

Table of Contents

**TXNM ENERGY, INC. AND SUBSIDIARIES**
**PUBLIC SERVICE COMPANY OF NEW MEXICO AND SUBSIDIARIES**
**TEXAS-NEW MEXICO POWER COMPANY AND SUBSIDIARIES**

**NOTES TO CONSOLIDATED FINANCIAL STATEMENTS**
**December 31, 2025, 2024 and 2023**

Future expected lease payments are shown below:

| | As of December 31, 2025 | | | | | | | | |
|---|---|---|---|---|---|---|---|---|---|
| | PNM | | | TNMP | | TXNM Consolidated | | |
| | | Operating | | | | | Operating | |
| | Financing | Energy Storage | Other | Financing | Operating | Financing | Energy Storage | Other |
| | (In thousands) | | | | | | | |
| 2026 | $ 6,319 | $ 6,700 | $ 7,045 | $ 7,318 | $ 16 | $ 14,049 | $ 6,700 | $ 7,130 |
| 2027 | 5,182 | $ 6,700 | $ 7,049 | 5,439 | 15 | 10,999 | $ 6,700 | 7,134 |
| 2028 | 3,748 | $ 6,700 | $ 7,052 | 4,310 | 11 | 8,253 | $ 6,700 | 7,135 |
| 2029 | 2,159 | $ 6,700 | $ 7,039 | 2,754 | — | 4,955 | $ 6,700 | 7,114 |
| 2030 | 862 | $ 6,700 | $ 164 | 815 | — | 1,678 | $ 6,700 | 241 |
| Later years | 801 | 94,720 | 3,497 | 202 | — | 1,003 | 94,720 | 3,771 |
| Total minimum lease payments | 19,071 | 128,220 | 31,846 | 20,838 | 42 | 40,937 | 128,220 | 32,525 |
| Less: Imputed interest | 1,567 | 51,634 | 3,273 | 1,778 | 3 | 3,408 | 51,634 | 3,407 |
| Lease liabilities | $ 17,504 | $ 76,586 | $ 28,573 | $ 19,060 | $ 39 | $ 37,529 | $ 76,586 | $ 29,118 |

The above table includes $16.1 million, $16.9 million, and $33.2 million for PNM, TNMP, and TXNM at December 31, 2025 for expected future payments on fleet vehicle and equipment leases that could be avoided if the leased assets were returned and the lessor is able to recover estimated market value for the equipment from third parties.

At December 31, 2025, the Company has an ESA that has been executed with a lease component that has not yet commenced. The lease component begins in 2029, expires in 2044, and will be recognized as a lease asset and liability upon the commencement. The expected total fixed consideration to be paid for this arrangement, which includes non-lease payments, is approximately $94.3 million over the 20-year terms of the agreements.

**(9) Fair Value of Derivative and Other Financial Instruments**

Fair value is defined as the price that would be received for an asset or paid to transfer a liability (an exit price) in the principal or most advantageous market for the asset or liability in an orderly transaction between market participants on the measurement date. Fair value is based on current market quotes as available and is supplemented by modeling techniques and assumptions made by the Company to the extent quoted market prices or volatilities are not available. External pricing input availability varies based on commodity location, market liquidity, and term of the agreement. Valuations of derivative assets and liabilities take into account nonperformance risk, including the effect of counterparties' and the Company's credit risk. The Company regularly assesses the validity and availability of pricing data for its derivative transactions. Although the Company uses its best judgment in estimating the fair value of these instruments, there are inherent limitations in any estimation technique.

**Energy Related Derivative Contracts**

**Overview**

The primary objective for the use of commodity derivative instruments, including energy contracts, options, swaps, and futures, is to manage price risk associated with forecasted purchases of energy and fuel used to generate electricity, as well as managing anticipated generation capacity in excess of forecasted demand from existing customers. PNM's energy related derivative contracts manage commodity risk. PNM is required to meet the demand and energy needs of its customers. PNM is exposed to market risk for the needs of its customers not covered under the FPPAC.

PNM's operations are managed primarily through a net asset-backed strategy, whereby PNM's aggregate net open forward contract position is covered by its forecasted excess generation capabilities or market purchases. PNM could be exposed to market risk if its generation capabilities were to be disrupted or if its load requirements were to be greater than anticipated. If all or a portion of load requirements were required to be covered as a result of such unexpected situations, commitments would have to be met through market purchases. TNMP does not enter into energy related derivative contracts.

Table of Contents

**TXNM ENERGY, INC. AND SUBSIDIARIES**
**PUBLIC SERVICE COMPANY OF NEW MEXICO AND SUBSIDIARIES**
**TEXAS-NEW MEXICO POWER COMPANY AND SUBSIDIARIES**

**NOTES TO CONSOLIDATED FINANCIAL STATEMENTS**
**December 31, 2025, 2024 and 2023**

**Commodity Risk**

Marketing and procurement of energy often involve market risks associated with managing energy commodities and establishing positions in the energy markets, primarily on a short-term basis. PNM routinely enters into various derivative instruments such as forward contracts, option agreements, and price basis swap agreements to economically hedge price and volume risk on power commitments and fuel requirements and to minimize the effect of market fluctuations. PNM monitors the market risk of its commodity contracts in accordance with approved risk and credit policies.

**Accounting for Derivatives**

Under derivative accounting and related rules for energy contracts, PNM accounts for its various instruments for the purchase and sale of energy, which meet the definition of a derivative, based on PNM's intent. During the years ended December 31, 2025, 2024, and 2023, PNM was not hedging its exposure to the variability in future cash flows from commodity derivatives through designated cash flow hedges. The derivative contracts recorded at fair value that do not qualify or are not designated for cash flow hedge accounting are classified as economic hedges. Economic hedges are defined as derivative instruments, including long-term power agreements, used to economically hedge generation assets, purchased power and fuel costs, and customer load requirements. Changes in the fair value of economic hedges are reflected in results of operations and are classified between operating revenues and cost of energy according to the intent of the hedge. PNM also uses such instruments under an NMPRC approved hedging plan to manage fuel and purchased power costs related to customers covered by its FPPAC. Changes in the fair value of instruments covered by its FPPAC are recorded as regulatory assets and liabilities. PNM has no trading transactions.

**Commodity Derivatives**

In November 2024, February 2025, and April 2025, PNM entered into agreements to purchase a total of 250 MW from July 1, 2025 through August 31, 2025 in order to ensure that customer demand during the 2025 summer peak load period was met. In 2024, PNM had existing agreements to purchase a total of 150 MW from July 1, 2024 through July 31, 2024 and 100 MW from August 1, 2024 through August 30, 2024. All of these agreements are related to customers covered by the FPPAC and are reflected in the commodity derivative table for each of the periods presented below.

PNM's commodity derivative instruments that are recorded at fair value, all of which are accounted for as economic hedges and considered Level 2 fair value measurements, are presented in the following line items on the Consolidated Balance Sheets:

| | Economic Hedges | |
|---|---|---|
| | December 31, | |
| | 2025 | 2024 |
| | (In thousands) | |
| Other current assets | $ — | $ — |
| Other current liabilities | — | (5,737) |
| Net | $ — | $ (5,737) |

Certain of PNM's commodity derivative instruments in the above table are subject to master netting agreements whereby assets and liabilities could be offset in the settlement process. PNM does not offset fair value and cash collateral for derivative instruments under master netting arrangements and the above table reflects the gross amounts of fair value assets and liabilities for commodity derivatives.

At December 31, 2025 and 2024, PNM had no amounts recognized for the legal right to reclaim cash collateral. However, amounts posted as cash collateral under margin arrangements were zero at December 31, 2025, and $0.1 million at December 31, 2024. These amounts are included in other current assets on the Consolidated Balance Sheets. At both December 31, 2025 and December 31, 2024, there were no obligations to return cash collateral.

At December 31, 2025 and 2024, PNM had no commodity derivative instruments, considered economic hedges, that did not pertain to the NMPRC-approved hedging plan discussed above. Changes in fair value had no impact on PNM's net earnings during the years ended December 31, 2025 and 2024. Commodity contract volume positions are presented in MMBTU for gas related contracts and in MWh for power related contracts.

Table of Contents

**TXNM ENERGY, INC. AND SUBSIDIARIES**
**PUBLIC SERVICE COMPANY OF NEW MEXICO AND SUBSIDIARIES**
**TEXAS-NEW MEXICO POWER COMPANY AND SUBSIDIARIES**

**NOTES TO CONSOLIDATED FINANCIAL STATEMENTS**
**December 31, 2025, 2024 and 2023**

The table below presents PNM's net buy (sell) volume positions:

| | Economic Hedges | |
|---|---|---|
| | MMBTU | MWh |
| December 31, 2025 | — | — |
| December 31, 2024 | — | 89,900 |

PNM has contingent requirements to provide collateral under commodity contracts having an objectively determinable collateral provision that are in net liability positions and are not fully collateralized with cash. In connection with managing its commodity risks, PNM enters into master agreements with certain counterparties. If PNM is in a net liability position under an agreement, some agreements provide that the counterparties can request collateral if PNM's credit rating is downgraded; other agreements provide that the counterparty may request collateral to provide it with "adequate assurance" that PNM will perform; and others have no provision for collateral.

The table below presents information about PNM's contingent requirement to provide collateral under certain commodity contracts having an objectively determinable collateral position, that are in net liability positions, and that are not fully collateralized with cash. Contractual liability represents those commodity derivative contracts recorded at fair value on the balance sheet, determined on an individual contract basis without offsetting amounts for individual contracts that are in an asset position and could be offset under master netting agreements with the same counterparty. Cash collateral posted under these contracts does not reflect letters of credit under the Company's revolving credit facilities that may have been issued as collateral. Net exposure is the net contractual liability for all contracts, including those designated as normal purchase and normal sale, offset by existing collateral and by any offsets available under master netting agreements, including both assets and liability positions.

| Contingent Feature - Credit Rating | Contractual Liability | Existing Cash Collateral | Net Exposure |
|---|---|---|---|
| | | (In thousands) | |
| December 31, 2025 | $ — | $ — | $ — |
| December 31, 2024 | $ 5,737 | $ — | $ 5,737 |

**Non-Derivative Financial Instruments**

The carrying amounts reflected on the Consolidated Balance Sheets approximate fair value for cash, receivables, and payables due to the short period of maturity. Investment securities are carried at fair value. Investment securities consist of PNM assets held in the NDT for its share of decommissioning costs of PVNGS, a trust for PNM's share of decommissioning costs at SJGS, and trusts for PNM's share of final reclamation costs related to the coal mines serving SJGS and Four Corners. See Note 16. At December 31, 2025 and 2024, the fair value of investment securities included $426.4 million and $384.6 million for the NDT, $6.0 million and $8.2 million for the SJGS decommissioning trust, and $73.2 million and $82.7 million for the coal mine reclamation trusts.

PNM records a realized loss as an impairment for any available-for-sale debt security that has a fair value that is less than its carrying value. As a result, the Company has no available-for-sale debt securities for which carrying value exceeds fair value and there are no impairments considered to be "other than temporary" that are included in AOCI and not recognized in earnings. All gains and losses resulting from sales and changes in the fair value of equity securities are recognized immediately in earnings.

Table of Contents

**TXNM ENERGY, INC. AND SUBSIDIARIES**
**PUBLIC SERVICE COMPANY OF NEW MEXICO AND SUBSIDIARIES**
**TEXAS-NEW MEXICO POWER COMPANY AND SUBSIDIARIES**

**NOTES TO CONSOLIDATED FINANCIAL STATEMENTS**
**December 31, 2025, 2024 and 2023**

Gains and losses recognized on the Consolidated Statements of Earnings related to investment securities in the NDT and reclamation trusts are presented in the following table:

| | Year ended December 31, | | |
|---|---|---|---|
| | 2025 | 2024 | 2023 |
| | | (In thousands) | |
| Equity securities: | | | |
| Net gains (losses) from equity securities sold | $ 38,186 | $ 28,283 | $ 1,086 |
| Net gains (losses) from equity securities still held | (3,455) | (10,071) | 14,152 |
| Total net gains (losses) on equity securities | 34,731 | 18,212 | 15,238 |
| Available-for-sale debt securities: | | | |
| Net gains (losses) on debt securities | 19 | 8,639 | 4,008 |
| Net gains (losses) on investment securities | $ 34,750 | $ 26,851 | $ 19,246 |

The proceeds and gross realized gains and losses on the disposition of securities held in the NDT and coal mine reclamation trusts are shown in the following table. Realized gains and losses are determined by specific identification of costs of securities sold. Gross realized losses shown below exclude the (increase)/decrease in realized impairment losses of zero, $17.8 million, and $19.1 million for the years ended December 31, 2025, 2024 and 2023.

| | Year Ended December 31, | | |
|---|---|---|---|
| | 2025 | 2024 | 2023 |
| | | (In thousands) | |
| Proceeds from sales | $ 693,278 | $ 707,338 | $ 574,199 |
| Gross realized gains | $ 45,218 | $ 35,918 | $ 18,618 |
| Gross realized (losses) | $ (7,032) | $ (16,814) | $ (32,649) |

At December 31, 2025, the available-for-sale debt securities held by PNM had the following final maturities:

| | Fair Value |
|---|---|
| | (In thousands) |
| Within 1 year | $ 26,931 |
| After 1 year through 5 years | 9,419 |
| | $ 36,350 |

**Fair Value Disclosures**

The Company determines the fair values of its derivative and other financial instruments based on the hierarchy, which requires an entity to maximize the use of observable inputs and minimize the use of unobservable inputs when measuring fair value. There are three levels of inputs that may be used to measure fair value. Level 1 inputs are quoted prices (unadjusted) in active markets for identical assets or liabilities that the reporting entity has the ability to access at the measurement date. Level 2 inputs are inputs other than quoted prices included within Level 1 that are observable for the asset or liability, either directly or indirectly.

For investment securities, Level 2 fair values are provided by fund managers utilizing a pricing service. For Level 2 fair values, the pricing provider predominantly uses the market approach using bid side market values based upon a hierarchy of information for specific securities or securities with similar characteristics. Fair values of Level 2 investments in mutual funds are equal to net asset value (“NAV”). For commodity derivatives, Level 2 fair values are determined based on market observable inputs, which are validated using multiple broker quotes, including forward price, volatility, and interest rate curves to establish expectations of future prices. Credit valuation adjustments are made for estimated credit losses based on the overall exposure to each counterparty. For the Company’s long-term debt, Level 2 fair values are provided by an external pricing service. The pricing service primarily utilizes quoted prices for similar debt in active markets when determining fair value. Management of the Company independently verifies the information provided by pricing services. Uncategorized investments include collective investment trusts, real estate funds, and multi-strategy hedge funds, which are measured at NAV at the end of each reporting period. Audited financial statements are received for each fund and reviewed by the Company annually. Fair value for these collective investment trusts is measured using a practical expedient provided under GAAP that allows the NAV per share to be used as fair value for investments in certain entities that do not have readily determinable fair values and are

Table of Contents

**TXNM ENERGY, INC. AND SUBSIDIARIES**
**PUBLIC SERVICE COMPANY OF NEW MEXICO AND SUBSIDIARIES**
**TEXAS-NEW MEXICO POWER COMPANY AND SUBSIDIARIES**

**NOTES TO CONSOLIDATED FINANCIAL STATEMENTS**
**December 31, 2025, 2024 and 2023**

considered to be investment companies. Investments valued using this practical expedient are not required to be presented within the GAAP fair value hierarchy.

Items recorded at fair value by PNM on the Consolidated Balance Sheets are presented below by level of the fair value hierarchy along with gross unrealized gains on investments in available-for-sale debt securities.

| | | GAAP Fair Value Hierarchy | | |
|---|---|---|---|---|
| | Total | Quoted Prices in Active Markets for Identical Assets (Level 1) | Significant Other Observable Inputs (Level 2) | Unrealized Gains |
| | | (In thousands) | | |
| **December 31, 2025** | | | | |
| Cash and cash equivalents | $ 33,469 | $ 33,469 | $ — | |
| Equity securities: | | | | |
| Corporate stocks, common | 154,790 | 154,790 | — | |
| Mutual funds and other | 202,995 | 202,995 | — | |
| Available-for-sale debt securities: | | | | |
| U.S. government | 30,619 | 30,619 | — | $ 227 |
| Corporate and other | 5,731 | — | 5,731 | 102 |
| Investments categorized within the fair value hierarchy | $ 427,604 | $ 421,873 | $ 5,731 | $ 329 |
| Uncategorized investments: | | | | |
| Collective investment trusts | 45,144 | | | |
| Real estate funds | 20,307 | | | |
| Hedge funds | 12,600 | | | |
| Total investment securities | $ 505,655 | | | |
| **December 31, 2024** | | | | |
| Cash and cash equivalents | $ 150,745 | $ 150,745 | $ — | |
| Equity securities: | | | | |
| Corporate stocks, common | 134,553 | 134,553 | — | |
| Mutual funds and other | 135,779 | 135,779 | — | |
| Available-for-sale debt securities: | | | | |
| U.S. government | 25,148 | 25,148 | — | $ 202 |
| Corporate and other | 7,196 | — | 7,196 | 122 |
| Investments categorized within the fair value hierarchy | $ 453,421 | $ 446,225 | $ 7,196 | $ 324 |
| Uncategorized investments: | | | | |
| Collective investment trusts | 22,103 | | | |
| Total investment securities | $ 475,524 | | | |

The carrying amounts and fair values of long-term debt, all of which are considered Level 2 fair value measurements and are not recorded at fair value on the Consolidated Balance Sheets are presented below:

| | Carrying Amount | Fair Value |
|---|---|---|
| **December 31, 2025** | (In thousands) | |
| TXNM | $ 5,418,564 | $ 5,506,722 |
| PNM | $ 2,861,897 | $ 2,757,316 |
| TNMP | $ 1,672,267 | $ 1,662,457 |
| **December 31, 2024** | | |
| TXNM | $ 4,923,368 | $ 4,706,076 |
| PNM | $ 2,459,592 | $ 2,284,362 |
| TNMP | $ 1,464,079 | $ 1,324,194 |

Table of Contents



The carrying amount and fair value of the Company's other investments presented on the Consolidated Balance Sheets are not material and not shown in the above table.

**Investments Held by Employee Benefit Plans**

As discussed in Note 11, PNM and TNMP have trusts that hold investment assets for their pension and other postretirement benefit plans. The fair value of the assets held by the trusts impacts the determination of the funded status of each plan, but the assets are not reflected on the Company's Consolidated Balance Sheets. Both the PNM Pension Plan and the TNMP Pension Plan hold units of participation in the PNM Resources, Inc. Master Trust (the "PNMR Master Trust"), which was established for the investment of assets of the pension plans. The PNM and TNMP Pension Plans' investment allocation targets in 2025 consist of 35% equities, 25% alternative investments (both of which are considered return generating), and 40% fixed income.

GAAP provides a practical expedient that allows the net asset value per share to be used as fair value for investments in certain entities that do not have readily determinable fair values and are considered to be investment companies. Fair values for alternative investments held by the PNMR Master Trust and PNM OPEB Plan are valued using this practical expedient. Investments for which fair value is measured using that practical expedient are not required to be categorized within the fair value hierarchy. Level 2 fair values are provided by fund managers utilizing a pricing service. For level 2 fair values, the pricing provider predominately uses the market approach using bid side market value based upon a hierarchy of information for specific securities or securities with similar characteristics. Fair values of Level 2 investments in mutual funds are equal to net asset value as of year-end. Fair value prices for Level 2 corporate term loans predominately use the market approach which uses bid side market values based upon hierarchy information for specific securities or securities with similar characteristics. Alternative investments include private equity funds, hedge funds, real estate funds, and a private collective investment trust. The private equity funds are not voluntarily redeemable. These investments are realized through periodic distributions occurring over a 10 to 15 years term after the initial investment. The real estate funds and hedge funds may be voluntarily redeemed but are subject to redemption provisions that may result in the funds not being redeemable in the near term. The private collective investment trust is a non-unitized fund that does not publish daily prices. Audited financial statements are received for each fund and are reviewed by the Company annually.

The valuation of alternative investments requires significant judgment by the pricing provider due to the absence of quoted market values, changes in market conditions, and the long-term nature of the assets. The significant unobservable inputs include estimates of liquidation value, current operating performance, and future expectations of performance.

Table of Contents

**TXNM ENERGY, INC. AND SUBSIDIARIES**
**PUBLIC SERVICE COMPANY OF NEW MEXICO AND SUBSIDIARIES**
**TEXAS-NEW MEXICO POWER COMPANY AND SUBSIDIARIES**

**NOTES TO CONSOLIDATED FINANCIAL STATEMENTS**
**December 31, 2025, 2024 and 2023**

The fair values of investments held by the employee benefit plans are as follows:

| | | GAAP Fair Value Hierarchy | |
|---|---|---|---|
| | Total | Quoted Prices in Active Markets for Identical Assets (Level 1) | Significant Other Observable Inputs (Level 2) |
| **December 31, 2025** | | (In thousands) | |
| **PNM Pension Plan** | | | |
| Participation in PNMR Master Trust Investments: | | | |
| Investments categorized within fair value hierarchy | $ 245,141 | $ 85,676 | $ 159,465 |
| Uncategorized investments | 49,404 | | |
| Total Master Trust Investments | $ 294,545 | | |
| **TNMP Pension Plan** | | | |
| Participation in PNMR Master Trust Investments: | | | |
| Investments categorized within fair value hierarchy | $ 31,265 | $ 9,278 | $ 21,987 |
| Uncategorized investments | 6,404 | | |
| Total Master Trust Investments | $ 37,669 | | |
| **PNM OPEB Plan** | | | |
| Cash and cash equivalents | $ 556 | $ 556 | $ — |
| Equity securities: | | | |
| Mutual funds | 40,424 | 40,424 | — |
| Investments categorized within fair value hierarchy | $ 40,980 | $ 40,980 | $ — |
| Uncategorized investments | | | |
| Venture capital and partnership funds | 35,722 | | |
| | $ 76,702 | | |
| **TNMP OPEB Plan** | | | |
| Cash and cash equivalents | $ 27 | $ 27 | $ — |
| Equity securities: | | | |
| Mutual funds | 6,705 | 6,705 | — |
| Investments categorized within fair value hierarchy | $ 6,732 | $ 6,732 | $ — |
| Uncategorized investments | | | |
| Venture capital and partnership funds | 657 | | |
| | $ 7,389 | | |

Table of Contents

**TXNM ENERGY, INC. AND SUBSIDIARIES**
**PUBLIC SERVICE COMPANY OF NEW MEXICO AND SUBSIDIARIES**
**TEXAS-NEW MEXICO POWER COMPANY AND SUBSIDIARIES**

**NOTES TO CONSOLIDATED FINANCIAL STATEMENTS**
**December 31, 2025, 2024 and 2023**

| | | GAAP Fair Value Hierarchy | |
|---|---|---|---|
| | Total | Quoted Prices in Active Markets for Identical Assets (Level 1) | Significant Other Observable Inputs (Level 2) |
| **December 31, 2024** | | (In thousands) | |
| **PNM Pension Plan** | | | |
| Participation in PNMR Master Trust Investments: | | | |
| Investments categorized within fair value hierarchy | $ 319,528 | $ 106,220 | $ 213,308 |
| Uncategorized investments | 59,546 | | |
| Total Master Trust Investments | $ 379,074 | | |
| **TNMP Pension Plan** | | | |
| Participation in PNMR Master Trust Investments: | | | |
| Investments categorized within fair value hierarchy | $ 33,294 | $ 7,543 | $ 25,751 |
| Uncategorized investments | 4,872 | | |
| Total Master Trust Investments | $ 38,166 | | |
| **PNM OPEB Plan** | | | |
| Cash and cash equivalents | $ 825 | $ 825 | $ — |
| Equity securities: | | | |
| Mutual funds | 38,713 | 38,713 | — |
| Investments categorized within fair value hierarchy | $ 39,538 | $ 39,538 | $ — |
| Uncategorized investments: | | | |
| Venture capital and partnership funds | 31,176 | | |
| Total Master Trust Investments | $ 70,714 | | |
| **TNMP OPEB Plan** | | | |
| Cash and cash equivalents | $ 111 | $ 111 | $ — |
| Equity securities: | | | |
| Mutual funds | 6,987 | 6,987 | — |
| Investments categorized within fair value hierarchy | $ 7,098 | $ 7,098 | $ — |
| Uncategorized investments: | | | |
| Venture capital and partnership funds | 484 | | |
| | $ 7,582 | | |

Table of Contents

**TXNM ENERGY, INC. AND SUBSIDIARIES**
**PUBLIC SERVICE COMPANY OF NEW MEXICO AND SUBSIDIARIES**
**TEXAS-NEW MEXICO POWER COMPANY AND SUBSIDIARIES**

**NOTES TO CONSOLIDATED FINANCIAL STATEMENTS**
**December 31, 2025, 2024 and 2023**

The fair values of investments in the PNMR Master Trust are as follows:

| | | GAAP Fair Value Hierarchy | |
|---|---|---|---|
| | Total | Quoted Prices in Active Markets for Identical Assets (Level 1) | Significant Other Observable Inputs (Level 2) |
| | | (In thousands) | |
| **December 31, 2025** | | | |
| **PNMR Master Trust** | | | |
| Cash and cash equivalents | $ 733 | $ 733 | $ — |
| Equity securities: | | | |
| Corporate stocks, common | 25,946 | 25,946 | — |
| Mutual funds and other | 128,786 | 48,165 | 80,621 |
| Fixed income securities: | | | |
| U.S. government | 42,481 | 20,110 | 22,371 |
| International government | 4,664 | — | 4,664 |
| Municipals | 3,356 | — | 3,356 |
| Corporate and other | 70,440 | — | 70,440 |
| Total investments categorized within fair value hierarchy | 276,406 | $ 94,954 | $ 181,452 |
| Uncategorized investments: | | | |
| Private equity funds | 1,321 | | |
| Hedge funds | 27,277 | | |
| Real estate funds | 27,210 | | |
| | $ 332,214 | | |
| **December 31, 2024** | | | |
| **PNMR Master Trust** | | | |
| Cash and cash equivalents | $ 10,981 | $ 10,981 | $ — |
| Equity securities: | | | |
| Corporate stocks, common | 34,418 | 34,418 | — |
| Mutual funds and other | 146,858 | 45,333 | 101,525 |
| Fixed income securities: | | | |
| U.S. government | 56,303 | 23,031 | 33,272 |
| International government | — | — | — |
| Municipals | 4,718 | — | 4,718 |
| Corporate and other | 99,544 | — | 99,544 |
| Total investments categorized within fair value hierarchy | 352,822 | $ 113,763 | $ 239,059 |
| Uncategorized investments: | | | |
| Private equity funds | 2,846 | | |
| Hedge funds | 34,126 | | |
| Real estate funds | 27,446 | | |
| | $ 417,240 | | |

**(10) Variable Interest Entities**

How an enterprise evaluates and accounts for its involvement with variable interest entities, focuses primarily on whether the enterprise has the power to direct the activities that most significantly impact the economic performance of a variable interest entity ("VIE"). This evaluation requires continual reassessment of the primary beneficiary of a VIE.

**Valencia**

PNM has a PPA to purchase all of the electric capacity and energy from Valencia, a 155 MW natural gas-fired power plant near Belen, New Mexico, through May 2028. In May 2025, the NMPRC approved a new PPA for 167 MW, through 2039, in connection with the 2028 Resource Application. A third party built, owns, and operates the facility while PNM is the sole purchaser of the electricity generated. PNM is obligated to pay fixed operation and maintenance and capacity charges in addition to variable operation and maintenance charges under this PPA. For the years ended December 31, 2025, 2024, and

Table of Contents

**TXNM ENERGY, INC. AND SUBSIDIARIES**
**PUBLIC SERVICE COMPANY OF NEW MEXICO AND SUBSIDIARIES**
**TEXAS-NEW MEXICO POWER COMPANY AND SUBSIDIARIES**

**NOTES TO CONSOLIDATED FINANCIAL STATEMENTS**
**December 31, 2025, 2024 and 2023**

2023, PNM paid $20.1 million, $20.5 million, and $20.3 million for fixed charges and $3.9 million, $2.4 million, and $5.2 million for variable charges. PNM does not have any other financial obligations related to Valencia. The assets of Valencia can only be used to satisfy its obligations and creditors of Valencia do not have any recourse against PNM's assets. During the term of the PPA, PNM has the option, under certain conditions, to purchase and own up to 50% of the plant or the VIE. The PPA specifies that the purchase price would be the greater of 50% of book value reduced by related indebtedness or 50% of fair market value.

PNM sources fuel for the plant, controls when the facility operates through its dispatch, and receives the entire output of the plant, which factors directly and significantly impact the economic performance of Valencia. Therefore, PNM has concluded that the third-party entity that owns Valencia is a VIE and that PNM is the primary beneficiary of the entity since PNM has the power to direct the activities that most significantly impact the economic performance of Valencia and will absorb the majority of the variability in the cash flows of the plant. As the primary beneficiary, PNM consolidates Valencia in its financial statements. Accordingly, the assets, liabilities, operating expenses, and cash flows of Valencia are included in the Consolidated Financial Statements of PNM although PNM has no legal ownership interest or voting control of the VIE. The assets and liabilities of Valencia are set forth below and are not shown separately on the Consolidated Balance Sheets. The owner's equity and net income of Valencia are considered attributable to non-controlling interest.

Summarized financial information for Valencia is as follows:

**Results of Operations**

| | Year Ended December 31 | | |
|---|---|---|---|
| | **2025** | **2024** | **2023** |
| | (In thousands) | | |
| Operating revenues | $ 24,048 | $ 22,763 | $ 25,421 |
| Operating expenses | 6,112 | 6,723 | 6,896 |
| Other Misc (Income)/Expense | — | — | (8) |
| Earnings attributable to non-controlling interest | $ 17,936 | $ 16,040 | $ 18,533 |

**Financial Position**

| | December 31, | |
|---|---|---|
| | **2025** | **2024** |
| | (In thousands) | |
| Current assets | $ 3,205 | $ 3,095 |
| Net property, plant and equipment | 41,570 | 44,411 |
| Total assets | 44,775 | 47,506 |
| Current liabilities | 787 | 606 |
| Owners' equity – non-controlling interest | $ 43,988 | $ 46,900 |

**Westmoreland San Juan Mining, LLC**

As discussed in the subheading Coal Supply in Note 16, PNM and Westmoreland San Juan Mining, LLC ("WSJ LLC"), a subsidiary of Westmoreland Mining Holdings, LLC have an agreement under which mine reclamation services for SJGS will be provided.

TXNM has $19.3 million in letters of credit to facilitate the issuance of reclamation bonds. The letters of credit support results in TXNM having a variable interest in WSJ LLC since TXNM is subject to possible loss in the event performance by TXNM is required under the letters of credit support. TXNM considers the possibility of loss under the letters of credit support to be remote since the purpose of posting the bonds is to provide assurance that WSJ LLC performs the required reclamation of the mine site in accordance with applicable regulations and the reclamation services agreement provides WSJ LLC the ability to recover the cost of reclamation. As discussed in Note 16, each of the SJGS participants has established and actively fund trusts to meet future reclamation obligations.

WSJ LLC is considered a VIE. TXNM's analysis of its arrangements with WSJ LLC concluded that WSJ LLC has the ability to direct its reclamation services, which are the factors that most significantly impact the economic performance of WSJ LLC. Other than PNM being able to monitor reclamation activities, the reclamation services were solely under the control of WSJ LLC, including developing reclamation plans, hiring of personnel, and incurring operating and maintenance expenses.

Table of Contents

**TXNM ENERGY, INC. AND SUBSIDIARIES**
**PUBLIC SERVICE COMPANY OF NEW MEXICO AND SUBSIDIARIES**
**TEXAS-NEW MEXICO POWER COMPANY AND SUBSIDIARIES**

**NOTES TO CONSOLIDATED FINANCIAL STATEMENTS**
**December 31, 2025, 2024 and 2023**

Neither TXNM nor PNM has any ability to direct or influence the reclamation activities. PNM's involvement through the reclamation services agreement is a protective right rather than a participating right and WSJ LLC still has the power to direct the activities that most significantly impact the economic performance of WSJ LLC. If WSJ LLC performs reclamation services more efficiently than anticipated, its economic performance will improve. Conversely, if WSJ LLC does not perform reclamation services as efficiently as anticipated, its economic performance will be negatively impacted. Accordingly, TXNM believes WSJ LLC is the primary beneficiary and, therefore, WSJ LLC is not consolidated by either TXNM or PNM. The amounts outstanding under the letters of credit support continue to be TXNM's maximum exposure to loss from the VIE at December 31, 2025.

**ETBC I**

ETBC I is a wholly-owned, special purpose subsidiary of PNM that was formed in August 2023 for the limited purpose of purchasing, owning, and administering energy transition property, issuing securitized bonds, and performing related activities authorized by the NMPRC. On November 15, 2023, ETBC I issued the ETBC I Securitized Bonds and used the proceeds to purchase energy transition property from PNM. The energy transition property purchased includes the right to impose, bill, collect, and adjust a non-bypassable energy transition charge from all PNM retail customers until the ETBC I Securitized Bonds are paid in full and all allowed financing costs have been recovered. The ETBC I Securitized Bonds are secured by the energy transition property and cash collections from the Energy Transition Charges are the sole source of funds to satisfy the debt obligation. The bondholders have no recourse to PNM.

PNM acts as the servicer of the energy transition property on behalf of ETBC I and is responsible for metering, calculating, billing, and collecting the Energy Transition Charges. On behalf of ETBC I, PNM is required to remit all collections of the Energy Transition Charges to the trustee for the ETBC I Securitized Bonds. PNM has the power to direct the activities that most significantly impact the economic performance of ETBC I and will absorb the majority of the variability in the cash flows of the entity. As the primary beneficiary, PNM consolidates ETBC I in its financial statements. Accordingly, the assets, liabilities, operating expenses, and cash flows of ETBC I are included in the Consolidated Financial Statements of PNM. The following tables summarize the impact of ETBC I on PNM's Consolidated Financial Statements:

| | Results of Operations | |
|---|---|---|
| | Year ended December 31, | |
| | 2025 | 2024 |
| | (In thousands) | |
| Electric Operating Revenues | $ 27,010 | $ 24,798 |
| Depreciation and amortization | 6,945 | 4,550 |
| Interest Charges | 19,738 | 20,073 |
| Other | 327 | 175 |
| Net Earnings | $ — | $ — |

**Financial Position**

| | December 31, | |
|---|---|---|
| | 2025 | 2024 |
| | (In thousands) | |
| Regulatory assets - Current | $ — | $ — |
| Restricted cash (included in Other current assets) | 11,954 | 15,838 |
| Restricted cash (included in Other deferred charges) | 1,743 | 1,748 |
| Securitized Cost (included in Regulatory assets - Deferred) | 329,134 | 336,079 |
| Current installments of long-term debt | 7,303 | 6,907 |
| Accrued interest and taxes | 7,306 | 7,452 |
| Regulatory liabilities - Current | 3,009 | 6,975 |
| Long-term Debt | 324,531 | 331,726 |

**(11) Pension and Other Postretirement Benefits**

TXNM and its subsidiaries maintain qualified defined benefit pension plans, postretirement benefit plans providing medical and dental benefits, and executive retirement programs (collectively, the "PNM Plans" and "TNMP Plans"). TXNM maintains the legal obligation for the benefits owed to participants under these plans. The periodic costs or income of the PNM

Table of Contents

**TXNM ENERGY, INC. AND SUBSIDIARIES**
**PUBLIC SERVICE COMPANY OF NEW MEXICO AND SUBSIDIARIES**
**TEXAS-NEW MEXICO POWER COMPANY AND SUBSIDIARIES**

**NOTES TO CONSOLIDATED FINANCIAL STATEMENTS**
**December 31, 2025, 2024 and 2023**

Plans and TNMP Plans are included in regulated rates to the extent attributable to regulated operations. PNM and TNMP receive a regulated return on the amounts funded for pension and OPEB plans in excess of the periodic cost or income to the extent included in retail rates (a "prepaid pension asset").

Participants in the PNM Plans include eligible employees and retirees of TXNM and PNM. Participants in the TNMP Plans include eligible employees and retirees of TNMP. The PNM pension plan was frozen at the end of 1997 with regard to new participants, salary levels, and benefits. Through December 31, 2007, additional credited service could be accrued under the PNM pension plan up to a limit determined by age and service. The TNMP pension plan was frozen at December 31, 2005, with regard to new participants, salary levels, and benefits.

A plan sponsor is required to (a) recognize in its statement of financial position an asset for a plan's overfunded status or a liability for a plan's underfunded status; (b) measure a plan's assets and its obligations that determine its funded status as of the end of the employer's fiscal year; and (c) recognize changes in the funded status of a defined benefit postretirement plan in the year in which the changes occur.

Unrecognized prior service costs and unrecognized gains or losses are required to be recorded in AOCI and subsequently amortized. To the extent the amortization of these items will ultimately be recovered or returned through future rates, PNM and TNMP record the costs as a regulatory asset or regulatory liability. The amortization of these incurred costs is included as pension and postretirement benefit periodic cost or income in subsequent years.

The Company maintains trust funds for the pension and OPEB plans from which benefits are paid to eligible employees and retirees. The Company's funding policy is to make contributions to the trusts, as determined by an independent actuary, that comply with minimum guidelines of the Employee Retirement Income Security Act and the IRC. Information concerning the fair value of investments is contained in Note 9. The Company has in place a policy that defines the investment objectives, establishes performance goals of asset managers, and provides procedures for the manner in which investments are to be reviewed.

The plans implement investment strategies to achieve the following objectives:

- Implement investment strategies commensurate with the risk that the Corporate Investment Committee deems appropriate to meet the obligations of the pension plans and OPEB plans, minimize the volatility of expense, and account for contingencies
- Transition asset mix over the long-term to a higher proportion of high-quality fixed income investments as the plans' funded statuses improve

Management is responsible for the determination of the asset target mix and the expected rate of return. The target asset allocations are determined based on consultations with external investment advisors. The expected long-term rate of return on pension and postretirement plan assets is calculated on the market-related value of assets. Actual gains and losses on pension and OPEB plan assets are recognized in the market-related value of assets equally over a period of not more than five years, which reduces year-to-year volatility. For the PNM Plans and TNMP Plans, the market-related value of assets is equal to the prior year's market-related value of assets adjusted for contributions, benefit payments and investment gains and losses that are within a corridor of plus or minus 4.0% around the expected return on market value. Gains and losses that are outside the corridor are amortized over five years.

In December 2025, TXNM, in its capacity as sponsor of the qualified benefit pension plans, entered into a commitment agreement with Delaware Life Insurance Company (the "Insurer") under which the plans agreed to purchase a nonparticipating single premium group annuity contract that will transfer to the Insurer 62% of the defined benefit pension obligations and associated plan assets related to pension benefits associated with a previously disposed of gas distribution business. The contract covers approximately 1,400 retirees from the previously disposed of business. To the extent provided in the contract, the Insurer has made an irrevocable commitment, and will be solely responsible, to pay benefits of each Participant that are due on and after June 1, 2026. The transaction will result in no changes to the amount of benefits payable to Participants. As a result of the transaction, PNM recognized a one-time settlement charge of $58.8 million related to the immediate recognition of unamortized net actuarial loss associated with the portion of the pension involved in the transaction.

***Pension Plans***

For defined benefit pension plans, including the executive retirement plans, the PBO represents the actuarial present value of all benefits attributed by the pension benefit formula to employee service rendered prior to that date using assumptions

Table of Contents

**TXNM ENERGY, INC. AND SUBSIDIARIES**
**PUBLIC SERVICE COMPANY OF NEW MEXICO AND SUBSIDIARIES**
**TEXAS-NEW MEXICO POWER COMPANY AND SUBSIDIARIES**

**NOTES TO CONSOLIDATED FINANCIAL STATEMENTS**
**December 31, 2025, 2024 and 2023**

regarding future compensation levels. The ABO represents the PBO without considering future compensation levels. Since the pension plans are frozen, the PBO and ABO are equal.

The following table presents information about the PBO, fair value of plan assets, and funded status of the plans:

| | PNM | | TNMP | |
|---|---|---|---|---|
| | Year Ended December 31, | | Year Ended December 31, | |
| | 2025 | 2024 | 2025 | 2024 |
| | (In thousands) | | | |
| PBO at beginning of year | $ 393,361 | $ 418,657 | $ 39,223 | $ 42,582 |
| Service cost | — | — | — | — |
| Interest cost | 21,539 | 21,709 | 2,145 | 2,214 |
| Actuarial (gain) loss | 10,160 | (6,063) | 852 | (2,047) |
| Benefits paid | (39,864) | (40,942) | (5,313) | (3,526) |
| Settlements | (91,938) | — | — | — |
| PBO at end of year | 293,258 | 393,361 | 36,907 | 39,223 |
| Fair value of plan assets at beginning of year | 379,154 | 407,211 | 38,225 | 41,353 |
| Actual return on plan assets | 46,156 | 12,884 | 4,735 | 247 |
| Employer contributions | — | 1 | — | 151 |
| Benefits paid | (39,864) | (40,942) | (5,312) | (3,526) |
| Settlements | (91,938) | — | — | — |
| Fair value of plan assets at end of year | 293,508 | 379,154 | 37,648 | 38,225 |
| Funded status – asset (liability) for pension benefits | $ 250 | $ (14,207) | $ 741 | $ (998) |

Actuarial (gain) loss results from changes in:

| | PNM | | TNMP | |
|---|---|---|---|---|
| | Year Ended December 31, | | Year Ended December 31, | |
| | 2025 | 2024 | 2025 | 2024 |
| | (in thousands) | | | |
| Discount rates | $ 8,726 | $ (9,376) | $ 577 | $ (961) |
| Demographic experience | 1,434 | 3,313 | 275 | (1,125) |
| Mortality rate | — | — | — | — |
| Other assumptions and experience | — | — | — | 39 |
| | $ 10,160 | $ (6,063) | $ 852 | $ (2,047) |

The following table presents pre-tax information about net actuarial (gain) loss in AOCI as of December 31, 2025.

| | PNM | TNMP |
|---|---|---|
| | (In thousands) | |
| Amounts in AOCI not yet recognized in net periodic benefit cost at beginning of year | $ 102,513 | $ — |
| Experience (gain) loss | (6,163) | (952) |
| Regulatory asset (liability) adjustment | 3,559 | 952 |
| Amortization recognized in net periodic benefit (income) | (5,415) | — |
| Pension settlement charge | $ (58,768) | $ — |
| Amounts in AOCI not yet recognized in net periodic benefit cost at end of year | $ 35,726 | $ — |

Table of Contents

**TXNM ENERGY, INC. AND SUBSIDIARIES**
**PUBLIC SERVICE COMPANY OF NEW MEXICO AND SUBSIDIARIES**
**TEXAS-NEW MEXICO POWER COMPANY AND SUBSIDIARIES**

**NOTES TO CONSOLIDATED FINANCIAL STATEMENTS**
**December 31, 2025, 2024 and 2023**

The following table presents the components of net periodic benefit cost (income):

| | Year Ended December 31, | | |
|---|---|---|---|
| | 2025 | 2024 | 2023 |
| | | (In thousands) | |
| **PNM** | | | |
| Service cost | $ — | $ — | $ — |
| Interest cost | 21,539 | 21,709 | 23,653 |
| Expected return on plan assets | (29,833) | (31,029) | (29,196) |
| Amortization of net loss | 12,494 | 10,646 | 10,583 |
| Amortization of prior service cost | — | — | — |
| Pension Settlement Charge | $ 58,768 | $ — | $ — |
| Net periodic benefit cost | $ 62,968 | $ 1,326 | $ 5,040 |
| **TNMP** | | | |
| Service cost | $ — | $ — | $ — |
| Interest cost | 2,145 | 2,214 | 2,402 |
| Expected return on plan assets | (2,933) | (2,749) | (2,697) |
| Amortization of net loss | 672 | 556 | 439 |
| Amortization of prior service cost | — | — | — |
| Settlement loss | — | — | — |
| Net periodic benefit cost | $ (116) | $ 21 | $ 144 |

The following significant weighted-average assumptions were used to determine the PBO and net periodic benefit cost (income). Should actual experience differ from actuarial assumptions, the PBO and net periodic benefit cost (income) would be affected.

| | Year Ended December 31, | | |
|---|---|---|---|
| **PNM** | **2025** | **2024** | **2023** |
| Discount rate for determining December 31 PBO | 5.49 % | 5.78 % | 5.46 % |
| Discount rate for determining net periodic benefit cost | 5.78 | 5.46 | 5.74 |
| Expected return on plan assets | 7.29 | 6.86 | 6.30 |
| Rate of compensation increase | N/A | N/A | N/A |
| **TNMP** | | | |
| Discount rate for determining December 31 PBO | 5.53 % | 5.78 % | 5.47 % |
| Discount rate for determining net periodic benefit cost | 5.78 | 5.47 | 5.75 |
| Expected return on plan assets | 7.00 | 5.95 | 5.50 |
| Rate of compensation increase | N/A | N/A | N/A |

The assumed discount rate for determining the PBO was determined based on a review of long-term high-grade bonds and management's expectations. The expected long-term rate of return on plan assets reflects the average rate of earnings expected on the funds invested, or to be invested, to provide for the benefits included in the PBO. Factors that are considered include, but are not limited to, historic returns on plan assets, current market information on long-term returns (e.g., long-term bond rates) and current and target asset allocations between asset categories. If all other factors were to remain unchanged, a 1% decrease in the expected long-term rate of return would cause PNM's and TNMP's 2026 net periodic benefit cost to increase $2.9 million and $0.4 million (analogous changes would result from a 1% increase). The actual rate of return for the PNM and TNMP pension plans was 12.97% and 13.31% for the year ended December 31, 2025.

The Company's long-term pension investment strategy is to invest in assets whose interest rate sensitivity is correlated with the pension liability. The Company uses an investment strategy, known as Liability Driven Investing, that increases the liability matching investments as the funded status of the pension plans improve. The Company's investment allocation targets consist of 35% equities, 25% alternative investments (both of which are considered return generating), and 40% liability matching securities that are primarily bonds and other fixed income investments. Equity investments are primarily in domestic securities that include large-, mid-, and small-capitalization companies. The pension plans have a 13% targeted allocation to equities of companies domiciled primarily in developed countries outside of the U.S. The equity investments category includes active and passive managed domestic equity securities that are benchmarked against a variety of style indices. Fixed income investments are primarily corporate bonds of companies from diversified industries and government securities. Alternative investments include investments in hedge funds, real estate funds, and private equity funds. The private equity funds are

Table of Contents

**TXNM ENERGY, INC. AND SUBSIDIARIES**
**PUBLIC SERVICE COMPANY OF NEW MEXICO AND SUBSIDIARIES**
**TEXAS-NEW MEXICO POWER COMPANY AND SUBSIDIARIES**

**NOTES TO CONSOLIDATED FINANCIAL STATEMENTS**
**December 31, 2025, 2024 and 2023**

structured as multi-manager multi-strategy fund of funds to achieve a diversified position in these asset classes. The hedge funds use multi-strategies that pursue various absolute return strategies such as relative value, merger arbitrage, event driven equities, and structured credit. The real estate investments are commingled real estate portfolios that invest in a diversified portfolio of assets including commercial property, infrastructure, storage facilities and multi-family housing. See Note 9 for fair value information concerning assets held by the pension plans.

The following pension benefit payments are expected to be paid:

| | PNM | TNMP |
|---|---|---|
| | (In thousands) | |
| 2026 | $ 29,416 | $ 4,228 |
| 2027 | 28,934 | 4,031 |
| 2028 | 28,186 | 3,937 |
| 2029 | 27,479 | 3,772 |
| 2030 | 26,491 | 3,570 |
| 2031 - 2035 | 118,524 | 14,461 |

Based on current law, funding requirements, and estimates of portfolio performance, the Company does not expect to make any cash contribution to the pension plans from 2026 through 2030. The funding assumptions were developed using a discount rate of 5.5%. Actual amounts to be funded in the future will be dependent on the actuarial assumptions at that time, including the appropriate discount rates. PNM and TNMP may make additional contributions at their discretion.

***Other Postretirement Benefit Plans***

For postretirement benefit plans, the APBO is the actuarial present value of all future benefits attributed under the terms of the postretirement benefit plan to employee service rendered to date. The following table presents information about the APBO, the fair value of plan assets, and the funded status of the plans:

| | PNM | | TNMP | |
|---|---|---|---|---|
| | Year Ended December 31, | | Year Ended December 31, | |
| | 2025 | 2024 | 2025 | 2024 |
| | (In thousands) | | | |
| APBO at beginning of year | $ 41,601 | $ 46,217 | $ 6,754 | $ 7,331 |
| Service cost | — | — | 18 | 21 |
| Interest cost | 2,267 | 2,387 | 373 | 385 |
| Participant contributions | 1,274 | 1,463 | 339 | 357 |
| Actuarial (gain) | 2,460 | (2,205) | 55 | (147) |
| Benefits paid | (6,115) | (6,261) | (1,079) | (1,193) |
| Curtailment loss | — | — | — | — |
| Plan design changes | — | — | 183 | — |
| APBO at end of year | 41,487 | 41,601 | 6,643 | 6,754 |
| Fair value of plan assets at beginning of year | 72,003 | 73,392 | 7,542 | 8,353 |
| Actual return on plan assets | 7,832 | 3,216 | 711 | 25 |
| Employer contributions | 933 | 193 | — | — |
| Participant contributions | 1,274 | 1,463 | 339 | 357 |
| Benefits paid | (6,114) | (6,261) | (1,080) | (1,193) |
| Fair value of plan assets at end of year | 75,928 | 72,003 | 7,512 | 7,542 |
| Funded status – asset | $ 34,441 | $ 30,402 | $ 869 | $ 788 |

As of December 31, 2025, the fair value of plan assets exceeds the APBO for both PNM's and TNMP's OPEB Plans, and the resulting net asset is presented in other deferred charges on the Consolidated Balance Sheets.

Table of Contents

**TXNM ENERGY, INC. AND SUBSIDIARIES**
**PUBLIC SERVICE COMPANY OF NEW MEXICO AND SUBSIDIARIES**
**TEXAS-NEW MEXICO POWER COMPANY AND SUBSIDIARIES**

**NOTES TO CONSOLIDATED FINANCIAL STATEMENTS**
**December 31, 2025, 2024 and 2023**

Actuarial (gain) loss results from changes in:

| | PNM | | TNMP | |
|---|---|---|---|---|
| | Year Ended December 31, | | Year Ended December 31, | |
| | 2025 | 2024 | 2025 | 2024 |
| | (in thousands) | | | |
| Discount rates | $ 822 | $ (877) | $ 161 | $ (179) |
| Claims, contributions, and demographic experience | 1,638 | (1,425) | (106) | 32 |
| Assumed participation rate | — | 97 | — | — |
| Mortality rate | — | — | — | — |
| Dental trend assumption | — | — | — | — |
| | $ 2,460 | $ (2,205) | $ 55 | $ (147) |

In the year ended December 31, 2025, actuarial losses of $0.2 million were recorded as adjustments to regulatory assets for the PNM OPEB plan. For the TNMP OPEB plan, actuarial gains of $0.2 million were recorded as adjustments to regulatory liabilities.

The following table presents the components of net periodic benefit cost (income):

| | Year Ended December 31, | | |
|---|---|---|---|
| | 2025 | 2024 | 2023 |
| | | (In thousands) | |
| **PNM** | | | |
| Service cost | $ — | $ — | $ — |
| Interest cost | 2,267 | 2,387 | 2,703 |
| Expected return on plan assets | (5,536) | (5,563) | (4,969) |
| Amortization of net loss | — | — | — |
| Curtailment loss | — | — | — |
| Net periodic benefit (income) | $ (3,269) | $ (3,176) | $ (2,266) |
| **TNMP** | | | |
| Service cost | $ 18 | $ 21 | $ 21 |
| Interest cost | 373 | 385 | 425 |
| Expected return on plan assets | (481) | (515) | (481) |
| Amortization of net (gain) | (496) | (642) | (760) |
| Net periodic benefit (income) | $ (586) | $ (751) | $ (795) |

The following significant weighted-average assumptions were used to determine the APBO and net periodic benefit cost. Should actual experience differ from actuarial assumptions, the APBO and net periodic benefit cost would be affected.

| | Year Ended December 31, | | |
|---|---|---|---|
| **PNM** | 2025 | 2024 | 2023 |
| Discount rate for determining December 31 APBO | 5.49 % | 5.78 % | 5.48 % |
| Discount rate for determining net periodic benefit cost | 5.78 | 5.48 | 5.75 |
| Expected return on plan assets | 6.95 | 6.60 | 5.90 |
| Rate of compensation increase | N/A | N/A | N/A |
| **TNMP** | | | |
| Discount rate for determining December 31 APBO | 5.49 % | 5.78 % | 5.48 % |
| Discount rate for determining net periodic benefit cost | 5.78 | 5.48 | 5.75 |
| Expected return on plan assets | 5.55 | 5.25 | 4.70 |
| Rate of compensation increase | N/A | N/A | N/A |

The assumed discount rate for determining the APBO was determined based on a review of long-term high-grade bonds and management's expectations. The expected long-term rate of return on plan assets reflects the average rate of earnings expected on the funds invested, or to be invested, to provide for the benefits included in the APBO. Factors that are considered include, but are not limited to, historic returns on plan assets, current market information on long-term returns (e.g., long-term bond rates), and current and target asset allocations between asset categories. If all other factors were to remain unchanged, a

Table of Contents

**TXNM ENERGY, INC. AND SUBSIDIARIES**
**PUBLIC SERVICE COMPANY OF NEW MEXICO AND SUBSIDIARIES**
**TEXAS-NEW MEXICO POWER COMPANY AND SUBSIDIARIES**

**NOTES TO CONSOLIDATED FINANCIAL STATEMENTS**
**December 31, 2025, 2024 and 2023**

1% decrease in the expected long-term rate of return would cause PNM's and TNMP's 2026 net periodic benefit cost to increase $0.8 million and $0.1 million (analogous changes would result from a 1% increase). The actual rate of return for the PNM and TNMP OPEB plans was 11.2% and 9.9% for the year ended December 31, 2025.

The following table shows the assumed health care cost trend rates for the PNM OPEB plan:

| | PNM | |
|---|---|---|
| | December 31, | |
| | 2025 | 2024 |
| Health care cost trend rate assumed for next year | 6.50 % | 6.50 % |
| Rate to which the cost trend rate is assumed to decline (the ultimate trend rate) | 4.75 | 4.75 |
| Year that the rate reaches the ultimate trend rate | 2033 | 2033 |

TNMP's exposure to cost increases in the OPEB plan is minimized by a provision that limits TNMP's share of costs under the plan. Costs of the plan in excess of the limit, which was reached at the end of 2001, are wholly borne by the participants. As a result, a one-percentage-point change in assumed health care cost trend rates would have no effect on either the net periodic expense or the year-end APBO. Effective January 1, 2018, the PNM OPEB plan was amended to limit the annual increase in the Company's costs to 5%. Increases in excess of the limit are born by the PNM OPEB plan participants.

The Company's OPEB plans invest in a portfolio that is diversified by asset class and style strategies. The OPEB plans generally use the same pension fixed income and equity investment managers and utilize the same overall investment strategy as described above for the pension plans, except there is no allocation to alternative investments. The OPEB plans have a target asset allocation of 30% equities and 70% fixed income. See Note 9 for fair value information concerning assets held by the other postretirement benefit plans. The following OPEB payments, which reflect expected future service and are net of participant contributions, are expected to be paid:

| | PNM | TNMP |
|---|---|---|
| | (In thousands) | |
| 2026 | $ 4,728 | $ 606 |
| 2027 | 4,519 | 596 |
| 2028 | 4,312 | 590 |
| 2029 | 4,007 | 576 |
| 2030 | 3,782 | 548 |
| 2031 - 2035 | 16,362 | 2,493 |

PNM and TNMP did not make cash contributions to the OPEB trusts in 2025 and less than $0.1 million and $0.2 million in 2024. PNM and TNMP do not expect to make cash contributions to the OPEB trusts in 2026-2030. However, a portion of the disbursements attributable to the OPEB trust are paid by PNM and are therefore considered to be contributions to the PNM OPEB plan. Payments by PNM on behalf of the PNM OPEB plan are expected to be $3.2 million in 2026 and $11.2 million in 2027-2030.

***Executive Retirement Programs***

TNMP has terminated its Executive Retirement Program as there are no longer any participants. For the executive retirement programs, the following table presents information about the PBO and funded status of the plans:

| | PNM | | TNMP | |
|---|---|---|---|---|
| | Year Ended December 31, | | Year Ended December 31, | |
| | 2025 | 2024 | 2025 | 2024 |
| | (In thousands) | | | |
| PBO at beginning of year | $ 9,031 | $ 9,714 | $ — | $ 316 |
| Service cost | — | — | — | — |
| Interest cost | 487 | 496 | — | 15 |
| Actuarial (gain) loss | (371) | (47) | — | (314) |
| Benefits paid | (1,118) | (1,132) | — | (17) |
| PBO at end of year – funded status | 8,029 | 9,031 | — | — |
| Less current liability | 1,043 | 1,171 | — | — |
| Non-current liability | $ 6,986 | $ 7,860 | $ — | $ — |

Table of Contents

**TXNM ENERGY, INC. AND SUBSIDIARIES**
**PUBLIC SERVICE COMPANY OF NEW MEXICO AND SUBSIDIARIES**
**TEXAS-NEW MEXICO POWER COMPANY AND SUBSIDIARIES**

**NOTES TO CONSOLIDATED FINANCIAL STATEMENTS**
**December 31, 2025, 2024 and 2023**

The following table presents pre-tax information about net actuarial loss in AOCI as of December 31, 2025.

| | December 31, 2025 | |
|---|---|---|
| | PNM | TNMP |
| | (In thousands) | |
| Amount in AOCI not yet recognized in net periodic benefit cost at beginning of year | $ 1,001 | $ — |
| Experience (gain) | (371) | — |
| Regulatory asset adjustment | 215 | — |
| Amortization recognized in net periodic benefit (income) | (79) | — |
| Amount in AOCI not yet recognized in net periodic benefit cost at end of year | $ 766 | $ — |

The following table presents the components of net periodic benefit cost:

| | Year Ended December 31, | | |
|---|---|---|---|
| | 2025 | 2024 | 2023 |
| | | (In thousands) | |
| **PNM** | | | |
| Service cost | $ — | $ — | $ — |
| Interest cost | 487 | 496 | 540 |
| Amortization of net loss | 189 | 200 | 152 |
| Amortization of prior service cost | — | — | — |
| Net periodic benefit cost | $ 676 | $ 696 | $ 692 |
| **TNMP** | | | |
| Service cost | $ — | $ — | $ — |
| Interest cost | — | 15 | 18 |
| Amortization of net loss | — | — | — |
| Amortization of prior service cost | — | — | — |
| Net periodic benefit cost | $ — | $ 15 | $ 18 |

The following significant weighted-average assumptions were used to determine the PBO and net periodic benefit cost. Should actual experience differ from actuarial assumptions, the PBO and net periodic benefit cost would be affected.

| | Year Ended December 31, | | |
|---|---|---|---|
| **PNM** | 2025 | 2024 | 2023 |
| Discount rate for determining December 31 PBO | 5.50 % | 5.78 % | 5.45 % |
| Discount rate for determining net periodic benefit cost | 5.78 | 5.45 | 5.73 |
| Long-term rate of return on plan assets | N/A | N/A | N/A |
| Rate of compensation increase | N/A | N/A | N/A |
| **TNMP** | | | |
| Discount rate for determining December 31 PBO | N/A | N/A | 5.47 % |
| Discount rate for determining net periodic benefit cost | — | 5.47 | 5.75 |
| Long-term rate of return on plan assets | N/A | N/A | N/A |
| Rate of compensation increase | N/A | N/A | N/A |

The assumed discount rate for determining the PBO was determined based on a review of long-term high-grade bonds and management's expectations. The impacts of changes in assumptions or experience were not significant.

Disbursements under the executive retirement program, funded by PNM and TNMP, which are considered to be contributions to the plan were $1.3 million and zero in the year ended December 31, 2025, and $1.3 million and $0.1 million for the year ended December 31, 2024.

Table of Contents

**TXNM ENERGY, INC. AND SUBSIDIARIES**
**PUBLIC SERVICE COMPANY OF NEW MEXICO AND SUBSIDIARIES**
**TEXAS-NEW MEXICO POWER COMPANY AND SUBSIDIARIES**

**NOTES TO CONSOLIDATED FINANCIAL STATEMENTS**
**December 31, 2025, 2024 and 2023**

The following executive retirement plan payments, which reflect expected future service, are expected:

| | PNM | TNMP |
|---|---|---|
| | (In thousands) | |
| 2026 | $ 1,071 | $ — |
| 2027 | 1,026 | — |
| 2028 | 973 | — |
| 2029 | 914 | — |
| 2030 | 852 | — |
| 2031 - 2035 | 3,305 | — |

***Other Retirement Plans***

TXNM sponsors a 401(k) defined contribution plan for eligible employees, including those of its subsidiaries. TXNM's contributions to the 401(k) plan consist of a discretionary matching contribution equal to 75% of the first 6% of eligible compensation contributed by the employee on a before-tax basis. TXNM also makes a non-matching contribution ranging from 3% to 10% of eligible compensation based on the eligible employee's age. TXNM also provides executive deferred compensation benefits through an unfunded, non-qualified plan. The purpose of this plan is to permit certain key employees of TXNM who participate in the 401(k) defined contribution plan to defer compensation and receive credits without reference to the certain limitations on contributions.

A summary of expenses for these other retirement plans is as follows:

| | Year Ended December 31, | | |
|---|---|---|---|
| | 2025 | 2024 | 2023 |
| | (In thousands) | | |
| **TXNM** | | | |
| 401(k) plan | $ 18,220 | $ 17,514 | $ 16,118 |
| Non-qualified plan | $ 4,299 | $ 4,350 | $ 1,197 |
| **PNM** | | | |
| 401(k) plan | $ 12,458 | $ 11,896 | $ 10,839 |
| Non-qualified plan | $ 2,783 | $ 2,937 | $ 825 |
| **TNMP** | | | |
| 401(k) plan | $ 5,762 | $ 5,617 | $ 5,279 |
| Non-qualified plan | $ 1,516 | $ 1,414 | $ 372 |

**(12) Stock-Based Compensation**

TXNM has various stock-based compensation programs, which provide restricted stock awards, that are performance based and time based, under the Performance Equity Plan ("PEP"). Although certain PNM and TNMP employees are eligible to participate in the TXNM plans, PNM and TNMP do not have separate employee stock-based compensation plans. Performance stock awards awarded under the PEP are awarded for a three-year, overlapping performance period. Performance stock awards with performance periods ending from 2024 through 2025 did not include market targets. Performance stock awards with performance periods ending after 2025 are subject to achieving both performance and market targets. Other awards of restricted stock are only subject to time-based vesting requirements.

**Performance Equity Plan**

The PEP provides for the granting of non-qualified stock options, restricted stock rights, performance shares, performance units, and stock appreciation rights to officers, key employees, and non-employee members of the Board. Restricted stock under the PEP refers to awards of stock subject to vesting, performance, or market conditions rather than to shares with contractual post-vesting restrictions. Generally, the awards vest ratably over three years from the grant date of the award. However, awards with performance or market conditions vest upon satisfaction of those conditions. In addition, plan provisions provide that upon retirement, participants become 100% vested in certain stock awards. The vesting period for awards of restricted stock to non-employee members of the Board is one year. The total number of shares of TXNM common stock subject to all awards under the 2014 PEP, as approved by TXNM's shareholders in May 2014, may not exceed 13.5 million shares, subject to adjustment and certain share counting rules set forth in the PEP. This share pool is charged five shares for each share subject to restricted stock or other full value award. In May 2023, TXNM's shareholders approved the

Table of Contents

**TXNM ENERGY, INC. AND SUBSIDIARIES**
**PUBLIC SERVICE COMPANY OF NEW MEXICO AND SUBSIDIARIES**
**TEXAS-NEW MEXICO POWER COMPANY AND SUBSIDIARIES**

**NOTES TO CONSOLIDATED FINANCIAL STATEMENTS**
**December 31, 2025, 2024 and 2023**

2023 PEP which set the maximum number of shares subject to all awards to be 2.5 million shares. The 2023 PEP share pool is charged a single share for each award.

**Source of Shares**

The source of shares for exercised stock options and vested restricted stock is currently shares acquired on the open market by an independent agent, rather than newly issued shares.

**Accounting for Stock Awards**

The stock-based compensation expense related to restricted stock awards without performance or market conditions to participants that are retirement eligible on the grant date is recognized immediately at the grant date and is not amortized. Compensation expense for other such awards is amortized to compensation expense over the shorter of the requisite vesting period or the period until the participant becomes retirement eligible. Compensation expense for performance-based shares is recognized ratably over the performance period as required service is provided and is adjusted periodically to reflect the level of achievement expected to be attained. Compensation expense related to market-based shares is recognized ratably over the measurement period, regardless of the actual level of achievement, provided the employees meet their service requirements.

Total compensation expense for stock-based payment arrangements recognized by TXNM for the years ended December 31, 2025, 2024, and 2023 was $8.8 million, $9.5 million, and $7.2 million. Stock compensation expense of $5.6 million, $5.0 million, and $4.8 million was charged to PNM and $3.2 million, $2.7 million, and $2.4 million was charged to TNMP for the years ended December 31, 2025, 2024, and 2023. At December 31, 2025, TXNM had unrecognized compensation expense related to stock awards of $6.3 million, which is expected to be recognized over an average of 1.62 years.

TXNM receives a tax deduction for the value of restricted stock at the vesting date. To the extent the tax deduction exceeds the Company's cumulative expense related to a stock award, an excess tax benefit is recorded. When the cumulative expense exceeds the tax deduction, a tax deficiency is recorded. All excess tax benefits and deficiencies are recorded to tax expense and classified as operating cash flows when used to reduce taxes payable.

| Excess Tax Benefits (Deficiencies) | Year Ended December 31, | | |
|---|---|---|---|
| | 2025 | 2024 | 2023 |
| | | (In thousands) | |
| PNM | $ 345 | $ 10 | $ 185 |
| TNMP | 162 | 4 | 76 |
| TXNM | 521 | 17 | 261 |

TNMP used excess tax benefits to reduce income taxes payable and the benefit was reflected in cash flows from operating activities. The benefit of excess tax benefits at PNM and TXNM will be reflected in operating cash flows when they reduce income taxes payable.

The grant date fair value for restricted stock and stock awards with Company internal performance targets is determined based on the market price of TXNM common stock on the date of the agreements reduced by the present value of future dividends that will not be received prior to vesting. The grant date fair value is applied to the total number of shares that are anticipated to vest, although the number of performance shares that ultimately vest cannot be determined until after the performance periods end. The grant date fair value of stock awards with market targets is determined using Monte Carlo simulation models, which provide grant date fair values that include an expectation of the number of shares to vest at the end of the measurement period. The following table summarizes the weighted-average assumptions used to determine the awards grant date fair value:

| Restricted Shares and Performance-Based Shares | Year Ended December 31, | | |
|---|---|---|---|
| | 2025 | 2024 | 2023 |
| Expected quarterly dividends per share | $ 0.4075 | $ 0.3875 | $ 0.3675 |
| Risk-free interest rate | 4.00 % | 4.27 % | 4.46 % |
| **Market-Based Shares [1]** | | | |
| Dividend yield | 3.12 % | 4.21 % | N/A |
| Expected volatility | 15.67 % | 13.09 % | N/A |
| Risk-free interest rate | 4.12 % | 4.31 % | N/A |

[1] Restricted stockexpected to be awarded under the PEP for performance periods ending in 2023 do not have market targets.

Table of Contents

**TXNM ENERGY, INC. AND SUBSIDIARIES**
**PUBLIC SERVICE COMPANY OF NEW MEXICO AND SUBSIDIARIES**
**TEXAS-NEW MEXICO POWER COMPANY AND SUBSIDIARIES**

**NOTES TO CONSOLIDATED FINANCIAL STATEMENTS**
**December 31, 2025, 2024 and 2023**

The following table summarizes activity in restricted stock awards including performance-based and market-based shares:

| | Restricted Stock | |
|---|---|---|
| | Shares | Weighted-Average Grant Date Fair Value |
| **Outstanding at December 31, 2024** | 241,237 | $ 37.05 |
| Granted | 215,137 | 48.90 |
| Released | (221,862) | 43.10 |
| Forfeited | (6,708) | 37.54 |
| **Outstanding at December 31, 2025** | 227,804 | $ 42.30 |

Included as granted and released in the table above are 50,923 previously awarded shares that were earned for the 2022 - 2024 performance measurement period and ratified by the Board in February 2025 (based upon achieving targets at above “target”, below “maximum” levels). Also included, as granted and released, are 1,524 of other RSAs for participants who retired and immediately vested. Included as released, are 44,577 of previously awarded shares that were earned for the 2023 - 2025 performance measurement period (based upon achieving targets at above “threshold”, below “target” levels) that the Board elected to release in December 2025. Excluded from the table above are 242,177 and 195,119 shares for the three-year performance periods ending in 2026 and 2027 that will be awarded if all performance criteria are achieved at maximum levels and all executives remain eligible.

At December 31, 2023, the Company had active retention agreements with its then Chairman and Chief Executive Officer and its then Senior Vice President and General Counsel under which they would be awarded a total of 26,766 and 8,922 respectively of restricted stock rights if they remained employed through the award’s vesting date which is the earliest of 24 months from the grant date or six months following the termination of the Avangrid Merger. As of December 31, 2023, upon the notice from Avangrid regarding the termination of the Avangrid Merger Agreement, these awards vested on June 30, 2024.

On December 4, 2023, the Company entered into a retention agreement with its then President and Chief Operating Officer under which he would receive a retention bonus of $1.0 million to be paid in increments beginning in December 2023 and continuing each December until 2025. On April 8, 2024, pursuant to the retention agreement, the Board elected to convert the unvested portion of the retention bonus of $0.8 million into restricted stock rights whereby each share of restricted stock is equal to one share of Company common stock as of the first trading day after expiration of the then current black-out period. On May 3, 2024, subsequent to the expiration of the black-out period, 19,851 restricted stock rights were awarded and 6,617 have vested as of December 31, 2024, in accordance with the original terms of the retention agreement. On December 1, 2025, the remaining 13,234 restricted stock rights vested in accordance with the original terms of the retention agreement.

On September 16, 2024, in connection with a one-time sign-on equity grant, the Company’s newly appointed General Counsel, Senior Vice President Regulatory and Public Policy, and Corporate Secretary was awarded 9,300 shares of restricted stock, of which 50% vested immediately and the remaining 50% vested on September 16, 2025.

The following table provides additional information concerning restricted stock activity, including performance-based and market-based shares:

| | Year Ended December 31, | | |
|---|---|---|---|
| **Restricted Stock** | **2025** | **2024** | **2023** |
| Weighted-average grant date fair value | $ 43.10 | $ 38.37 | $ 41.98 |
| Total fair value of restricted shares that vested (in thousands) | $ 11,748 | $ 8,380 | $ 8,689 |

**(13) Regulatory Assets and Liabilities**

The operations of PNM and TNMP are regulated by the NMPRC, PUCT, and FERC and the provisions of GAAP for rate-regulated enterprises are applied to its regulated operations. Regulatory assets represent probable future recovery of previously incurred costs that will be collected from customers through the ratemaking process. Regulatory liabilities represent probable future reductions in revenues associated with amounts that are to be credited to customers through the ratemaking process.

Table of Contents

**TXNM ENERGY, INC. AND SUBSIDIARIES**
**PUBLIC SERVICE COMPANY OF NEW MEXICO AND SUBSIDIARIES**
**TEXAS-NEW MEXICO POWER COMPANY AND SUBSIDIARIES**

**NOTES TO CONSOLIDATED FINANCIAL STATEMENTS**
**December 31, 2025, 2024 and 2023**

Regulatory assets and liabilities reflected in the Consolidated Balance Sheets are presented below.

| | PNM | | TNMP | |
|---|---|---|---|---|
| | December 31, | | December 31, | |
| | 2025 | 2024 | 2025 | 2024 |
| **Assets:** | | (In thousands) | | |
| Current: | | | | |
| FPPAC | $ 2,039 | $ 30,487 | $ — | $ — |
| NMPRC hedging plan | — | 5,737 | — | — |
| Transmission cost recovery factor | — | — | — | 5,268 |
| Energy efficiency costs | — | — | 2,583 | — |
| Grid Modernization Plan | 6,460 | — | — | — |
| HB 5247 | — | — | 17,534 | — |
| System Resiliency Plan | — | — | 13,169 | — |
| | 8,499 | 36,224 | 33,286 | 5,268 |
| Non-Current: | | | | |
| SJGS securitized costs | $ 329,134 | $ 336,079 | $ — | $ — |
| SJGS ETA | 27,437 | 24,996 | — | — |
| SJGS - non-ETA | 106,349 | 114,333 | — | — |
| PVNGS leased interest | 78,624 | 82,982 | — | — |
| EIM | 11,431 | 15,189 | — | — |
| TEP | 11,620 | 4,942 | — | — |
| Loss on reacquired debt | 11,271 | 12,507 | 22,423 | 23,721 |
| Pension and OPEB | 165,243 | 176,171 | 19,216 | 21,087 |
| Deferred income taxes | 76,880 | 74,925 | 8,258 | 8,570 |
| Excess ADIT | — | — | 12,955 | 6,542 |
| AMS retirement and other costs | — | — | 13,409 | 12,851 |
| Deferred COVID-19 costs | 2,094 | 3,328 | — | — |
| Hurricane Beryl | — | — | 20,510 | 20,958 |
| Other | 12,708 | 11,858 | 9,687 | 10,964 |
| | 832,791 | 857,310 | 106,458 | 104,693 |
| Total regulatory assets | $ 841,290 | $ 893,534 | $ 139,744 | $ 109,961 |
| **Liabilities:** | | | | |
| Current: | | | | |
| PVNGS rate refunds | $ (3,127) | $ (19,194) | $ — | $ — |
| Renewable energy rider | (1,300) | (4,786) | — | — |
| Energy efficiency costs | (916) | (2,459) | — | (602) |
| Transmission cost recovery factor | — | — | (2,592) | — |
| SJGS securitized costs | (3,009) | (6,975) | | |
| Other | (78) | (157) | — | — |
| | (8,430) | (33,571) | (2,592) | (602) |
| Non-Current: | | | | |
| Cost of removal | $ (252,856) | $ (247,280) | $ (190,072) | $ (147,296) |
| Deferred income taxes | (221,469) | (253,158) | (76,757) | (80,152) |
| Renewable energy tax benefits | (12,170) | (13,317) | — | — |
| PVNGS rate refunds | — | (3,277) | — | — |
| Pension and OPEB | — | — | (2,084) | (2,589) |
| COVID-19 cost savings | — | (469) | — | — |
| Other | (1,911) | (1,200) | — | — |
| | (488,406) | (518,701) | (268,913) | (230,037) |
| Total regulatory liabilities | $ (496,836) | $ (552,272) | $ (271,505) | $ (230,639) |

Table of Contents

**TXNM ENERGY, INC. AND SUBSIDIARIES**
**PUBLIC SERVICE COMPANY OF NEW MEXICO AND SUBSIDIARIES**
**TEXAS-NEW MEXICO POWER COMPANY AND SUBSIDIARIES**

**NOTES TO CONSOLIDATED FINANCIAL STATEMENTS**
**December 31, 2025, 2024 and 2023**

The Company's regulatory assets and regulatory liabilities are reflected in rates charged to customers or have been addressed in a regulatory proceeding. The Company does not receive or pay a rate of return on the following regulatory assets and regulatory liabilities (and their remaining amortization periods): SJGS securitized costs (over the life of the ETBC I Securitized Bonds); portions of PVNGS Leased Interest (through 2044); PVNGS rate refunds (through 2026); deferred income taxes (over the remaining life of the taxable item, up to the remaining life of utility plant); pension and OPEB costs (through 2040).

The Company is permitted, under rate regulation, to accrue and record a regulatory liability for the estimated cost of removal and salvage associated with certain of its assets through depreciation expense. Actuarial losses and prior service costs for pension plans are required to be recorded in AOCI; however, to the extent authorized for recovery through the regulatory process these amounts are recorded as regulatory assets or liabilities. Based on prior regulatory approvals, the amortization of these amounts will be included in the Company's rates. Based on a current evaluation of the various factors and conditions that are expected to impact future cost recovery, the Company believes that future recovery of its regulatory assets is probable.

**(14) Construction Program and Jointly-Owned Electric Generating Plants**

PNM is a participant in jointly-owned power plant projects. The primary operating or participation agreements for the other joint projects expire in July 2041 for Four Corners, December 2046 for Luna, and November 2047 for PVNGS. PNM's expenditures for additions to utility plant were $585.2 million in 2025, including expenditures on jointly-owned projects. TNMP does not participate in the ownership or operation of any generating plants, but incurred expenditures for additions to utility plant of $563.1 million during 2025. On a consolidated basis, TXNM's expenditures for additions to utility plant were $1,195.9 million in 2025.

**Joint Projects**

Under the agreements for the jointly-owned projects, PNM has an undivided interest in each asset and liability of the project and records its pro-rata share of each item in the corresponding asset and liability account on PNM's Consolidated Balance Sheets. Likewise, PNM records its pro-rata share of each item of operating and maintenance expenses for its jointly-owned plants within the corresponding operating expense account in its Consolidated Statements of Earnings. PNM is responsible for financing its share of the capital and operating costs of the joint projects.

At December 31, 2025, PNM's interests in jointly-owned generating facilities including transmission, distribution, and plant in common are:

| Station (Type) | Plant in Service | Accumulated Depreciation [1] | Construction Work in Progress | Composite Interest |
|---|---|---|---|---|
| | | (In thousands) | | |
| PVNGS (Nuclear) | $ 828,030 | $ 431,571 | $ 30,781 | 7.29 % |
| Four Corners Units 4 and 5 (Coal) | $ 323,698 | $ 100,554 | $ 6,516 | 13.00 % |
| Luna (Gas) | $ 106,398 | $ 36,881 | $ 2,327 | 33.33 % |

[1] Includes cost of removal.

*Palo Verde Nuclear Generating Station*

PNM is a participant in the three units of PVNGS with APS (the operating agent), SRP, EPE, SCE, SCPPA, and The Department of Water and Power of the City of Los Angeles. PNM has ownership interests of 2.3% in Unit 1, 9.4% in Unit 2, and 10.2% in Unit 3. In January 2023, leased capacity of 104 MW in PVNGS Unit 1 expired and the rights to the capacity were acquired by SRP from the lessors subsequently, making PNM's interest in PVNGS be 7.6% at December 31, 2023. In January 2024, the leased capacity of 10 MW in PVNGS Unit 2 expired and the rights were also acquired by SRP, reducing PNM's interest in PVNGS to 7.3%. See Note 8 for additional information concerning the PVNGS leases.

*Four Corners Power Plant*

PNM is a participant in two units of Four Corners with APS (the operating agent), an affiliate of APS, SRP, and Tucson. PNM has a 13.0% undivided interest in Units 4 and 5 of Four Corners. The Four Corners plant site is located on land within the Navajo Nation and is subject to an easement from the federal government. APS, on behalf of the Four Corners participants, negotiated amendments to an existing agreement with the Navajo Nation, which extends the owners' right to operate the plant on the site to July 2041. See Notes 16 and 17 for additional information about Four Corners.

Table of Contents

**TXNM ENERGY, INC. AND SUBSIDIARIES**
**PUBLIC SERVICE COMPANY OF NEW MEXICO AND SUBSIDIARIES**
**TEXAS-NEW MEXICO POWER COMPANY AND SUBSIDIARIES**

**NOTES TO CONSOLIDATED FINANCIAL STATEMENTS**
**December 31, 2025, 2024 and 2023**

*Luna Energy Facility*

Luna is a combined-cycle power plant near Deming, New Mexico. Luna is owned equally by PNM, Tucson, and Samchully Power & Utilities 1, LLC. The operation and maintenance of the facility have been contracted to North American Energy Services by PNM.

**(15) Asset Retirement Obligations**

AROs are recorded based on studies to estimate the amount and timing of future ARO expenditures and reflect underlying assumptions, such as discount rates, estimates of the future costs for decommissioning, and the timing of the removal activities to be performed. Approximately 76.2% of PNM's total ARO liabilities are related to nuclear decommissioning of PVNGS. PNM is responsible for all decommissioning obligations related to its entire interest in PVNGS, including portions both during and after termination of the leases. Studies of the decommissioning costs of PVNGS, SJGS, Four Corners, and other facilities are performed periodically and revisions to the ARO liabilities are recorded. Changes in the assumptions underlying the calculations may also require revisions to the estimated AROs when identified.

A reconciliation of the ARO liabilities is as follows:

| | TXNM | PNM | TNMP |
|---|---|---|---|
| | | (In thousands) | |
| **Liability at December 31, 2022** | $ 223,377 | $ 222,549 | $ 828 |
| Liabilities incurred | — | — | — |
| Liabilities settled | (3,482) | (3,482) | — |
| Accretion expense | 10,218 | 10,148 | 70 |
| Revisions to estimated cash flows[1] | 15,418 | 15,418 | — |
| **Liability at December 31, 2023** | 245,531 | 244,633 | 898 |
| Liabilities incurred | — | — | — |
| Liabilities settled | (12,451) | (12,432) | (19) |
| Accretion expense | 11,538 | 11,462 | 76 |
| **Liability at December 31, 2024** | 244,618 | 243,663 | 955 |
| Liabilities incurred[2] | 6,226 | 6,226 | — |
| Liabilities settled | (7,769) | (7,477) | (292) |
| Accretion expense | 12,022 | 11,941 | 81 |
| **Liability at December 31, 2025** | $ 255,097 | $ 254,353 | $ 744 |

[1] Reflects an increase of $15.4 million related to an updated PVNGS decommissioning study.
[2] Reflects an increase of $3.4 million related to a new ash pond at Lordsburg station and a $2.8 million increase related to a new Four Corners study for pond and CCR decommissioning projects.

**(16) Commitments and Contingencies**

**Merger-Related Litigation**

Counsel for TXNM has received a number of demand letters from certain law firms on behalf of individuals who are purported TXNM shareholders, accompanied by draft complaints naming TXNM and its directors as defendants and alleging that TXNM's preliminary proxy statement with respect to the Merger omitted or misrepresented certain material information. Such draft complaints include a request for injunctive relief with respect to the TXNM shareholder vote to approve, and the closing of, the Merger, as well as other remedies, including counsel fees. In August 2025, reported shareholders filed complaints in New York state court alleging disclosure violations and seeking injunctive relief. TXNM believes that the allegations set forth in the demand letters, draft complaints, and complaints are without merit and will defend against such actions vigorously.

***Overview***

There are various claims and lawsuits pending against the Company. In addition, the Company is subject to federal, state, and local environmental laws and regulations and periodically participates in the investigation and remediation of various sites. In addition, the Company periodically enters into financial commitments in connection with its business operations. Also, the Company is involved in various legal and regulatory proceedings in the normal course of its business. See Note 17. It is not possible at this time for the Company to determine fully the effect of all litigation and other legal and regulatory proceedings on its financial position, results of operations, or cash flows.

Table of Contents

**TXNM ENERGY, INC. AND SUBSIDIARIES**
**PUBLIC SERVICE COMPANY OF NEW MEXICO AND SUBSIDIARIES**
**TEXAS-NEW MEXICO POWER COMPANY AND SUBSIDIARIES**

**NOTES TO CONSOLIDATED FINANCIAL STATEMENTS**
**December 31, 2025, 2024 and 2023**

With respect to some of the items listed below, the Company has determined that a loss is not probable or that, to the extent probable, cannot be reasonably estimated. In some cases, the Company is not able to predict with any degree of certainty the range of possible loss that could be incurred. The Company assesses legal and regulatory matters based on current information and makes judgments concerning their potential outcome, giving due consideration to the nature of the claim, the amount and nature of any damages sought, and the probability of success. Such judgments are made with the understanding that the outcome of any litigation, investigation, or other legal proceeding is inherently uncertain. The Company records liabilities for matters where it is probable a loss has been incurred, and the amount of loss is reasonably estimatable. The actual outcomes of the items listed below could ultimately differ from the judgments made and the differences could be material. The Company cannot make any assurances that the amount of reserves or potential insurance coverage will be sufficient to cover the cash obligations that might be incurred as a result of litigation or regulatory proceedings. Except as otherwise disclosed, the Company does not expect that any known lawsuits, environmental costs, or commitments will have a material effect on its financial condition, results of operations, or cash flows.

***Commitments and Contingencies Related to the Environment***

**PVNGS Decommissioning Funding**

The costs of decommissioning a nuclear power plant are substantial. PNM is responsible for all decommissioning obligations related to its entire interest in PVNGS, including portions under leases both during and after termination of the leases. PNM has a program for funding its share of decommissioning costs for PVNGS, including portions previously held under leases. The nuclear decommissioning funding program is invested in equities and fixed income instruments in qualified and non-qualified trusts. PNM funded $1.3 million for each of the years ended December 31, 2025, 2024 and 2023 into the qualified trust funds. The fair value of the trusts at December 31, 2025 and 2024 was $426.4 million and $384.6 million.

**Nuclear Spent Fuel and Waste Disposal**

Nuclear power plant operators are required to enter into spent fuel disposal contracts with the DOE that require the DOE to accept and dispose of all spent nuclear fuel and other high-level radioactive wastes generated by domestic power reactors. Although the Nuclear Waste Policy Act required the DOE to develop a permanent repository for the storage and disposal of spent nuclear fuel by 1998, the DOE announced that it would not be able to open the repository by 1998 and sought to excuse its performance of these requirements. In November 1997, the DC Circuit issued a decision preventing the DOE from excusing its own delay but refused to order the DOE to begin accepting spent nuclear fuel. Based on this decision and the DOE's delay, a number of utilities, including APS (on behalf of itself and the other PVNGS owners, including PNM), filed damages actions against the DOE in the Court of Federal Claims. The lawsuits filed by APS alleged that damages were incurred due to DOE's continuing failure to remove spent nuclear fuel and high-level waste from PVNGS. APS and the DOE entered into a settlement agreement, subsequently extended, that established a process for the payment of claims for costs incurred through December 31, 2025. Under the settlement agreement, APS must submit claims annually for payment of allowable costs. APS is currently evaluating a proposed extension of the settlement agreement to cover costs paid through December 31, 2028. PNM records estimated claims on a quarterly basis. The benefit from the claims is passed through to customers under the FPPAC.

PNM estimates that it will incur approximately $55.6 million (in 2023 dollars) for its share of the costs related to the on-site interim storage of spent nuclear fuel at PVNGS for the remaining term of the operating licenses. PNM accrues these costs as a component of fuel expense as the nuclear fuel is consumed. At December 31, 2025 and 2024, PNM had a liability for interim storage costs of $15.5 million and $13.4 million, which is included in other deferred credits.

PVNGS has sufficient capacity at its on-site Independent Spent Fuel Storage Installation ("ISFSI") to store all of the nuclear fuel that will be irradiated during the initial operating license period, which ends in December 2027. Additionally, PVNGS has sufficient capacity at its on-site ISFSI to store a portion of the fuel that will be irradiated during the period of extended operation, which ends in November 2047. If uncertainties regarding the U.S. Government's obligation to accept and store spent fuel are not favorably resolved, APS will evaluate alternative storage solutions that may obviate the need to expand the ISFSI to accommodate all of the fuel that will be irradiated during the period of extended operation.

**The New Mexico Energy Transition Act**

The New Mexico Energy Transition Act ("ETA") sets a statewide standard that requires investor-owned electric utilities to have specified percentages of their electric-generating portfolios be from renewable and zero-carbon generating resources. The passage of the ETA amended the REA to require utilities operating in New Mexico to have renewable portfolios equal to 40% by 2025, 50% by 2030, 80% by 2040, and 100% zero-carbon energy by 2045. The amendments also allow for the

Table of Contents



recovery of undepreciated investments and decommissioning costs related to qualifying EGUs that the NMPRC has required be removed from retail jurisdictional rates, provided replacement resources to be included in retail rates have lower or zero-carbon emissions. The ETA requires the NMPRC to review and approve utilities' annual renewable portfolio plans to ensure compliance with the RPS. Also pursuant to the ETA, the NM Environmental Improvement Board adopted standards of performance that limit $CO_2$ emissions to no more than 1,100 lbs. per MWh beginning January 1, 2023, for new and existing coal-fired EGUs with original installed capacities exceeding 300 MW.

The ETA provides for a transition from fossil-fuel generation resources to renewable and other carbon-free resources through certain provisions relating to the abandonment of coal-fired generating facilities. These provisions include the use of energy transition bonds to finance certain costs of abandoning coal-fired facilities that are retired prior to January 1, 2023, for facilities operated by a "qualifying utility," or prior to January 1, 2032 for facilities that are not operated by a qualifying utility. The amount of energy transition bonds that can be issued to recover abandonment costs is limited to the lesser of $375.0 million or 150% of the undepreciated investment of the facility as of the abandonment date. Proceeds provided by energy transition bonds must be used only for purposes related to providing utility service to customers and to pay energy transition costs (as defined by the ETA). These costs may include plant decommissioning and coal mine reclamation costs provided those costs have not previously been recovered from customers or disallowed by the NMPRC or by a court order. Proceeds from energy transition bonds may also be used to fund severances for employees of the retired facility and related coal mine and to promote economic development, education and job training in areas impacted by the retirement of the coal-fired facilities. Energy transition bonds must be issued under a NMPRC-approved financing order, are secured by "energy transition property," are non-recourse to the issuing utility, and are repaid by a non-bypassable charge paid by all customers of the issuing utility. These customer charges are subject to an adjustment mechanism designed to provide for timely and complete payment of principal and interest due under the energy transition bonds.

The ETA also provides that utilities must obtain NMPRC approval of competitively procured replacement resources that shall be evaluated based on their cost, economic development opportunity, ability to provide jobs with comparable pay and benefits to those lost upon retirement of the facility, and that do not exceed emissions thresholds specified in the ETA. In determining whether to approve replacement resources, the NMPRC must give preference to resources with the least environmental impacts, those with higher ratios of capital costs to fuel costs, and those located in the school district of the abandoned facility. The ETA also provides for the procurement of energy storage facilities and gives utilities discretion to maintain, control, and operate these systems to ensure reliable and efficient service.

The ETA has had and will have a significant impact on PNM's future generation portfolio, including PNM's retirement of SJGS in 2022. PNM cannot predict the full impact of the ETA with respect to Four Corners or the outcome of its future generating resource abandonment and replacement resource filings with the NMPRC. See additional discussion in Note 17 of PNM's SJGS and Four Corners Abandonment Applications.

**The Clean Air Act**
*Regional Haze*

Pursuant to the CAA, states are required to establish goals for improving visibility in national parks and wilderness areas (also known as Class I areas) and to develop long-term strategies for reducing emissions of air pollutants that cause visibility impairment in their own states and for preventing degradation in other states. States must establish a series of interim goals to ensure continued progress by adopting a new SIP every ten years. In the first SIP planning period, states were required to conduct BART determinations for certain covered facilities, including utility boilers, built between 1962 and 1977 that have the potential to emit more than 250 tons per year of visibility impairing pollution. For all future SIP planning periods, states must evaluate whether additional emissions reduction measures may be needed to continue making reasonable progress toward natural visibility conditions.

SIPs for the second planning period were due in July 2021, which deadline NMED was unable to meet. NMED is currently preparing its SIP for the second compliance period and has notified PNM that it will not be required to submit a regional haze four-factor analysis for SJGS since PNM retired its share of SJGS in 2022. On August 30, 2022, EPA published in the Federal Register an official "Finding of Failure to Submit" for states, including New Mexico, that have not yet submitted a round 2 regional haze SIP. This action by EPA started a two-year clock for it to issue a FIP which deadline has now passed. NMED petitioned the NM Environmental Improvement Board to adopt a proposed SIP and submitted a final revised plan to the NM Environmental Improvement Board on March 3, 2025. PNM submitted comments on the proposed SIP in response to a request for comments by NMED. The NM Environmental Improvement Board held a public hearing from April 28 to April 30, 2025. On December 8, 2025, the NM Environmental Improvement Board adopted the proposed SIP and final rule. No PNM

Table of Contents



generating stations were identified as reasonable progress units under the adopted SIP indicating that no additional emissions reductions measures may be necessary at this time.

On March 12, 2025, as part of EPA's list of 31 deregulatory actions, EPA announced it would restructure the Regional Haze Program. On October 2, 2025, EPA published an advanced notice of proposed rulemaking to solicit information from the public to help develop regulatory changes on the implementation and structure of the Regional Haze Rule ("RHR"). The advanced notice itself does not impose any requirements but requests input on how EPA can revise the RHR to streamline regulatory requirements impacting states' visibility improvement obligations. Comments were due December 1, 2025.

*Carbon Dioxide Emissions*

In 2015, EPA established standards to limit $CO_2$ emissions from power plants, including (1) Carbon Pollution Standards for new, modified, and reconstructed power plants; and (2) the Clean Power Plan for existing power plants. Challengers successfully petitioned the U.S. Supreme Court for a stay of the Clean Power Plan. In 2019, EPA repealed the Clean Power Plan, promulgated the ACE Rule, and revised the implementing regulations for all emission guidelines. The ACE Rule was also challenged, and on January 19, 2021, the DC Circuit issued an opinion in American Lung Association and American Public Health Association v. EPA, et al., vacating the ACE Rule.

Numerous parties sought review by the U.S. Supreme Court, and on June 30, 2022, the U.S. Supreme Court held that the "generation shifting" approach in the Clean Power Plan exceeded the powers granted to EPA by Congress. Of broader significance in administrative law, the Court's opinion expressly invoked the "major question" doctrine, which requires rules involving issues of "vast economic or political significance" to be supported by clear statutory authorization. In cases where there is no clear statement of authority, courts need not defer to the agency's statutory interpretation on "major questions." The decision sets legal precedent for future rulemakings by EPA and other federal regulatory agencies whereby the agencies' authority may be limited based upon similar reasoning.

The litigation over the Carbon Pollution Standards remains held in abeyance but could be reactivated by the parties upon a determination by the court that reconsideration of the rule has concluded.

In 2024, EPA adopted regulatory actions under CAA Sections 111(b) and (d) to replace the Clean Power Plan and the ACE Rule. The final rules include revised new source performance standards under Section 111(b) for all new natural gas-fired combustion turbines and emission guidelines under Section 111(d) requiring states to develop standards of performance for GHG emissions from existing fossil-fuel-fired electric steam generating units. In the final rules, EPA determined that the standards for existing coal- or gas-fired steam generating units must be based on the use of either CCS (long-term), natural gas co-firing (medium-term), or exempt from the rule via early retirement. The standards for new combustion turbines must be based on CCS (base load), efficient simple cycle design (intermediate load), or lower-emitting fuels (low load). Over a dozen states, several industry groups and some power companies and labor unions filed challenges to the rule at the DC Circuit, which heard oral arguments on December 6, 2024. However, President Trump issued several executive orders on January 20, 2025, directing his Administration to review all agency actions and suspend, revise, or rescind those identified as imposing an undue burden on domestic energy resources. On March 12, 2025, as part of EPA's reconsideration of 31 environmental regulations, EPA announced the agency will reconsider the previous Administration's regulations on GHG standards and guidelines for power plants. On June 17, 2025, EPA published a proposed rule in the Federal Register with two alternatives to repeal or revise the GHG emission standards for EGUs. EPA primarily proposes to find that GHG emissions from fossil fuel-fired power plants "do not contribute significantly to dangerous air pollution" under the meaning of CAA Section 111, which would preclude EPA from regulating GHG emissions from those plants. As a result, EPA is proposing to repeal all GHG standards for the power sector promulgated under CAA Section 111 in both 2015 and 2024. EPA also proposed, in the alternative, to find that CCS is not adequately demonstrated and that neither CCS nor gas co-firing are the best system of emission reduction for GHG emissions from power plants, which findings also support repeal of those specific requirements from the rules adopted in 2024. Comments were due by September 15, 2025, and EPA had indicated it intended to finalize the proposed rule in the first quarter of 2026.

Because the CAA 111 rule does not contain provisions for existing natural gas units, on March 26, 2024, EPA announced it was opening a non-regulatory docket and issued framing questions to gather input about ways to design a stronger, more durable approach to GHG regulation of existing gas combustion turbines. The docket was open for public comment from March 26, 2024 to May 28, 2024 and the agency held a policy forum to bring stakeholders together to share ideas with EPA and others. Under the Trump Administration, EPA is unlikely to propose a rule based on this non-regulatory docket.

Table of Contents

**TXNM ENERGY, INC. AND SUBSIDIARIES**
**PUBLIC SERVICE COMPANY OF NEW MEXICO AND SUBSIDIARIES**
**TEXAS-NEW MEXICO POWER COMPANY AND SUBSIDIARIES**

**NOTES TO CONSOLIDATED FINANCIAL STATEMENTS**
**December 31, 2025, 2024 and 2023**

In 2021, President Biden signed an extensive executive order aimed at addressing climate change concerns domestically and internationally. The order was intended to build on the initial climate-related actions the Biden Administration took on January 20, 2021. It addressed a wide range of issues, including establishing climate change concerns as an essential element of U.S. foreign and security policy, identifying a process to determine the U.S. INDC under the Paris Agreement, and establishing a Special Presidential Envoy for Climate that would sit on the National Security Council. On April 22, 2021, at the Earth Day Summit, as part of the U.S.'s re-entry into the Paris Agreement, President Biden unveiled the goal to cut U.S. emissions by 50% - 52% from 2005 levels by 2030, nearly double the GHG emissions reduction target set by the Obama Administration. The 2030 goal joined President Biden's other climate goals which included a carbon pollution-free power sector by 2035 and a net-zero emissions economy by no later than 2050. In an executive order issued on January 20, 2025, President Trump ordered his Administration to withdraw the U. S. from the Paris Agreement and from any agreement, pact, accord, or similar commitment made under the United Nations Framework Convention on Climate Change.

On August 1, 2025, EPA published a proposal to rescind the 2009 final rule commonly known as the Endangerment Finding. In the Endangerment Finding, EPA found that current and projected atmospheric concentrations of the well-mixed combination of six GHGs threaten public health and welfare, and that the combined emissions of these GHGs from new motor vehicles and engines contribute to the GHG pollution that threatens public health and welfare. This provided the basis for EPA's subsequent GHG regulations applicable to stationary sources. Comments were due September 15, 2025. On January 7, 2026, EPA sent the proposed rule rescinding the 2009 Endangerment Finding to OMB. On February 12, 2026, the final rule was finalized as proposed, repealing all GHG emission standards for certain vehicles and engines promulgated on the basis of the Endangerment Finding. While the Endangerment Finding did not directly impose any requirements on EGUs, EPA cited the Endangerment Finding as a basis for its authority to regulate GHG emissions from EGUs under CAA Section 111.

PNM's review of the GHG emission reductions standards that have or may occur as a result of legislation or regulation is ongoing. We are currently determining what impact, if any, the final rules will have on our business, results of operations, and financial condition.

*National Ambient Air Quality Standards ("NAAQS")*

The CAA requires EPA to set NAAQS for pollutants reasonably anticipated to endanger public health or welfare. EPA has set NAAQS for certain pollutants, including NOx, $SO_2$, ozone, and particulate matter.

*$NO_X$ Standard* – In 2018, EPA published the final rule to retain the current primary health-based NOx standards of which $NO_2$ is the constituent of greatest concern and is the indicator for the primary NAAQS. EPA concluded that the current 1-hour and annual primary $NO_2$ standards are requisite to protect public health with an adequate margin of safety. The rule became effective on May 18, 2018. The State of New Mexico has attained the current NOx NAAQS standards.

*$SO_2$ Standard* – In 2019, EPA announced its final decision to retain, without changes, the primary health-based NAAQS for $SO_2$. Specifically, EPA retained the current 1-hour standard for $SO_2$, which is 75 parts per billion, based on the 3-year average of the 99$^{th}$ percentile of daily maximum 1-hour $SO_2$ concentrations. In 2021, EPA published in the Federal Register the initial air quality designations for all remaining areas not yet designated under the 2010 $SO_2$ Primary NAAQS. All areas of New Mexico have been designated attainment/unclassifiable through four rounds of designations by EPA.

*Ozone Standard* – In 2015, EPA finalized the new ozone NAAQS and lowered both the primary and secondary 8-hour standard from 75 to 70 parts per billion. With ozone standards becoming more stringent, fossil-fueled generation units will come under increasing pressure to reduce emissions of NOx and volatile organic compounds since these are the pollutants that form ground-level ozone. During 2017 and 2018, EPA released rules establishing area designations for ozone. In those rules, San Juan County, New Mexico, where Four Corners is located, is designated as attainment/unclassifiable and only a small area in Doña Ana County, New Mexico is designated as marginal non-attainment. Although Afton Generating Station is located in Doña Ana County, it is not located within the small area designated as non-attainment for the 2015 ozone standard. PNM does not believe there will be material impacts to its facilities because of the non-attainment designation of the small area within Doña Ana County. Until EPA approves attainment designations for the Navajo Nation and releases a proposal to implement the revised ozone NAAQS, PNM is unable to predict what impact the adoption of these standards may have on Four Corners. On July 13, 2020, EPA proposed to retain the existing ozone NAAQS based on a review of the full body of currently available scientific evidence and exposure/risk information, but on August 21, 2023, EPA announced an entirely new review of the ozone standard. PNM cannot predict the outcome of this matter.

In 2019, EPA issued findings that several states, including New Mexico, had failed to submit interstate transport SIPs for the 2015 8-hour ozone NAAQS, triggering an obligation for EPA to issue a FIP within two years. In response, NMED

Table of Contents



submitted a Good Neighbor SIP on July 27, 2021, that demonstrates that there are no significant contributions from New Mexico to downwind problems in meeting the federal ozone standard. On March 15, 2023, EPA Administrator Regan signed a final action imposing a FIP on multiple states but did not include a FIP for New Mexico because the most updated modeling available at the time of the proposal confirmed the state did not contribute to downwind ozone nonattainment or maintenance areas. However, the updated modeling EPA used in the final rule indicated that New Mexico may be significantly contributing to one or more non-attainment or maintenance areas. In light of that modeling result, on February 16, 2024, the EPA published a proposed rule partially disapproving the SIPs for New Mexico and four other states (Arizona, Iowa, Kansas, and Tennessee) and expanding the Good Neighbor FIP to apply to these states. The FIP aspect of the proposed rule would have required fossil fuel-fired power plants in these five states to participate in an allowance-based ozone season NOx emissions trading program beginning in 2025, but the outgoing Biden Administration did not finalize the rule. On March 10, 2025, in the DC Circuit, the EPA filed a motion for voluntary remand of its ozone interstate transport FIP for the 2015 ozone NAAQS to reconsider the rule and had anticipated completing a new rulemaking by Fall 2026. In addition, EPA has now reconsidered the policies underlying its Good Neighbor rule, and, on January 30, 2026, EPA issued a proposed rule to approve New Mexico's SIP submission because it will not contribute significantly to nonattainment or interfere with maintenance of the 2015 8-hour ozone NAAQS in any other state. If finalized, the EPA will withdraw the prior proposed partial SIP disapproval.

*PM Standard* – In 2023, EPA published, in the Federal Register, a proposal to lower the annual fine PM standard to between 9-10 µg/m3 but retain the rest of its PM standards, including the current daily fine PM standard, the daily coarse PM standard, and the secondary PM standards. The final rule was published on March 6, 2024, lowering the primary annual PM 2.5 NAAQS to 9 ug/m3, and became effective May 6, 2024. States will have until March 2032 to attain compliance with the new standard. During the multi-year implementation process, EPA will designate attainment/nonattainment areas by March 6, 2026, and states will submit a SIP to EPA by September 6, 2027. This implementation process also applies to the Albuquerque-Bernalillo County Environmental Health Department who may combine efforts with NMED. However, even before any designations are made, the new standard is effective for conducting required modeling for permit applications and revisions. The lower standard is expected to result in new nonattainment areas throughout the country and could prompt additional PM control requirements, but PNM cannot predict the impacts of the outcome of future rulemaking. The PM standard was challenged in the D.C. Circuit, and, following the change in administration, EPA filed a motion for voluntary vacatur of the rule, which remains pending. Although initial designations were due in February 2026, EPA is expected to seek an extension of that deadline by one year to allow time for the court to rule on the motion for voluntary vacatur.

**Cooling Water Intake Structures**

In 2014, EPA issued a rule establishing national standards for certain cooling water intake structures at existing power plants and other facilities under the Clean Water Act to protect fish and other aquatic organisms by minimizing impingement mortality (the capture of aquatic wildlife on intake structures or against screens) and entrainment mortality (the capture of fish or shellfish in water flow entering and passing through intake structures).

To minimize impingement mortality, the rule provides operators of facilities, such as Four Corners, seven options for meeting Best Technology Available ("BTA") standards for reducing impingement. The permitting authority must establish the BTA for entrainment on a site-specific basis, taking into consideration an array of factors, including endangered species and social costs and benefits. Affected sources must submit source water baseline characterization data to the permitting authority to assist in the BTA determination. Compliance deadlines under the rule are tied to permit renewals, including any subject to a schedule of compliance established by the permitting authority in the permit itself.

In 2018, several environmental groups sued EPA Region IX in the U.S. Court of Appeals for the Ninth Circuit over EPA's failure to timely reissue the Four Corners NPDES permit. The petitioners asked the court to issue a *writ of mandamus* compelling EPA Region IX to take final action on the pending NPDES permit by a reasonable date. EPA subsequently reissued the NPDES permit. The permit did not contain conditions related to the cooling water intake structure rule, because EPA determined that the facility had achieved BTA for both impingement and entrainment by operating a closed-cycle recirculation system. Several environmental groups filed a petition for review with EPA's Environmental Appeals Board ("EAB") concerning the reissued permit. The environmental groups alleged that the permit was reissued in contravention of the Clean Water Act and did not contain limits or conditions required by EPA's ELG applicable to Four Corners or EPA's cooling water intake structures rule, among others. EPA withdrew the Four Corners NPDES permit in order to examine the issues raised by the environmental groups and then issued an updated NPDES permit in 2019. The permit was once again appealed to the EAB and was stayed before the effective date, but the EAB issued an order denying the petition for review on September 30, 2020. Thereafter, the Regional Administrator of the EPA signed a notice of final permit decision, and the NPDES permit was issued on November 9, 2020. The permit became effective December 1, 2020. On January 22, 2021, the environmental groups filed a petition for review of the EAB's decision with the U.S. Court of Appeals for the Ninth Circuit. The September 2019 permit

Table of Contents



remained in effect pending the outcome of this appeal. On March 21, 2022, EPA provided notice in the Federal Register of a proposed settlement agreement with the environmental groups. The parties subsequently executed the settlement agreement as of May 2, 2022. Under the settlement, the lawsuit was administratively closed through September 6, 2023, during which time a third-party consultant spent 12 months sampling discharges from Four Corners and EPA spent three months completing an analysis. On December 1, 2023, EPA issued a modification, effective December 31, 2023, to the NPDES permit that had been issued on November 9, 2020. The modification applies to permit elements related to effluent discharge. PNM cannot predict whether the analysis required to be performed by EPA under the settlement agreement will result in further changes to the NPDES permit but does not anticipate that it will have a material impact on PNM's financial position, results of operations, or cash flows.

**Effluent Limitation Guidelines**

In 2013, EPA published proposed revised wastewater ELG establishing technology-based wastewater discharge limitations for fossil fuel-fired electric power plants. EPA signed the final Steam Electric ELG rule in 2015. The final rule, which became effective on January 4, 2016, phased in the new, more stringent requirements in the form of effluent limits for arsenic, mercury, selenium, and nitrogen for wastewater discharged from wet scrubber systems and zero discharge of pollutants in ash transport water that must be incorporated into plants' NPDES permits. The 2015 rule required each plant to comply between 2018 and 2023 depending on when it needed a new or revised NPDES permit.

The Steam Electric ELG rule was challenged in the U.S. Court of Appeals for the Fifth Circuit by numerous parties. In 2017, EPA signed a notice indicating its intent to reconsider portions of the rule, and the Fifth Circuit issued an order severing the issues under reconsideration and holding the case in abeyance as to those issues. However, the court allowed challenges to other portions of the rule to proceed. In 2019, the Fifth Circuit granted those challenges and issued an opinion vacating several portions of the rule, specifically those related to legacy wastewater and leachate, for which the court deemed the standards selected by EPA to be arbitrary and capricious.

In 2017, EPA published a final rule for postponement of certain compliance dates. The rule postponed the earliest date on which compliance with the ELG for regulated waste streams would be required from November 1, 2018 until November 1, 2020. In 2019, EPA published a proposed rule revising the original ELG while maintaining the compliance dates. In 2020, EPA published in the Federal Register the final Steam Electric ELG and Standards for the Steam Electric Power Generating Point Source Category, revising the final 2015 guidelines for both flue gas desulfurization wastewater and bottom ash transport water. The 2020 rule required compliance with new limits as soon as possible on or after October 13, 2021, but no later than December 31, 2025.

In 2021, EPA published notice that it would undertake a supplemental rulemaking to revise the ELG after completing its review of the rules reconsidered in 2020. As part of this process, EPA committed to determine whether more stringent limitations and standards would be appropriate. On March 29, 2023, EPA published the proposed ELG Rule in the Federal Register. The proposed rule included stricter limitations for wastewater discharges for coal-fired facilities but allowed for flexibilities for those coal-powered facilities that would decommission or repower by December 31, 2028, to December 31, 2032.

On May 9, 2024, EPA published a final rule to further revise the ELG. This final supplemental rule updated the technology-based limitations applicable to flue gas desulfurization wastewater, bottom ash transport water, and legacy wastewater at existing sources, as well as combustion residual leachate at new and existing sources. The 2024 rule was challenged in the U.S. Court of Appeals for the Eighth Circuit, but the court denied motions for a stay, so the rule remains in effect. On March 12, 2025, EPA announced it would reconsider the ELGs for the steam electric power generating industry. On October 2, 2025, EPA published proposed and direct final rules for extension of deadlines and other provisions. Comments were due November 3, 2025. On November 28, 2025, EPA withdrew the direct final rule due to adverse comments and on December 31, 2025, published a final rule revising various deadlines and other provisions in the 2024 rule.

Reeves Station discharges cooling tower blowdown to a publicly owned treatment plant and no longer holds an NPDES permit; therefore, it is expected that no ELG requirements will be imposed.

See "Cooling Water Intake Structures" above for additional discussion of Four Corners' current NPDES permit. Four Corners may be required to change equipment and operating practices affecting boilers and ash handling systems, as well as change its waste disposal techniques during the next NPDES permit renewal. PNM is unable to predict the outcome of these matters or a range of the potential costs of compliance.

Table of Contents



**Santa Fe Generating Station**

PNM and NMED are parties to agreements under which PNM has installed a remediation system to treat water from a City of Santa Fe municipal supply well and an extraction well to address gasoline contamination in the groundwater at the site of PNM's former Santa Fe Generating Station and service center. A 2008 NMED site inspection report states that neither the source nor extent of contamination at the site has been determined and that the source may not be the former Santa Fe Generating Station. During 2013 and 2014, PNM and NMED collected additional samples that showed elevated concentrations of nitrate and volatile organic compounds in some of the monitoring wells at the site. In addition, one monitoring well contained free-phase hydrocarbon products. PNM collected a sample of the product for "fingerprint" analysis. The results of this analysis indicated the product was a mixture of older and newer fuels. The presence of newer fuels in the sample suggests the hydrocarbon product likely originated from off-site sources. In 2015, PNM and NMED entered into a memorandum of understanding to address changing groundwater conditions at the site under which PNM agreed to continue hydrocarbon investigation under the supervision of NMED. Qualified costs are eligible for payment through the New Mexico Corrective Action Fund ("CAF"), which is administered by the NMED Petroleum Storage Tank Bureau. In 2019, PNM received notice from NMED that an abatement plan for the site is required to address concentrations of previously identified compounds, unrelated to those discussed above, found in the groundwater. NMED approved PNM's abatement plan proposal, which covers field work and reporting.

Field work related to the investigation under both the CAF and abatement plan requirements was completed and activities and findings associated with the field work were presented in two separate reports and released to stakeholders in early 2020. Subsequent field work was completed in July 2020, and two reports were released supporting PNM's contention that off-site sources have impacted, and are continuing to impact, the local groundwater in the vicinity of the former Santa Fe Generating Station.

In 2021, NMED approved both the field work plans required for site characterization and associated work activities which were completed by the end of 2022 and a report was submitted to NMED in 2023. Groundwater sampling for the abatement plan's first semiannual work was completed in 2023, and the associated report was completed and submitted to NMED. In addition, the work plan for the 2023 CAF work was completed and submitted to NMED in July 2023. NMED approved this work plan in December 2023. The activities from the work plan include the installation of three monitoring wells which were completed in December 2024. A report summarizing the well installation is under preparation. Site wide sampling was completed in March 2025, with reports provided to NMED. In November 2025 additional groundwater sampling was initiated and completed in December 2025. A report summarizing the groundwater sampling results is under preparation.

The City of Santa Fe has stopped operating its well at the site, which is needed for PNM's groundwater remediation system to operate. As a result, PNM has stopped performing remediation activities at the site. However, PNM's monitoring and other abatement activities at the site are ongoing and will continue until the groundwater meets applicable federal and state standards or until NMED determines that remediation is not required, whichever is earlier. PNM is also in communications with the City of Santa Fe to determine when operations at the site might resume. PNM is not able to assess the duration of this project or estimate the impact on its obligations if PNM is required to resume groundwater remediation activities at the site. PNM is unable to predict the outcome of these matters.

**Coal Combustion Residuals Waste Disposal**

CCRs consisting of fly ash, bottom ash, and gypsum generated from coal combustion and emission control equipment at SJGS have been disposed of in the surface mine pits adjacent to the plant. SJGS does not operate any onsite CCR impoundments or landfills. The NMMMD currently regulates mine reclamation activities at the San Juan mine, including placement of CCRs in the surface mine pits, with federal oversight by the OSM. APS disposes of CCRs in onsite ponds and dry storage areas at Four Corners. Ash management at Four Corners is regulated by EPA and the New Mexico State Engineer's Office.

EPA's 2015 coal ash rule included a non-hazardous waste determination for coal ash and sets minimum criteria for existing and new CCR landfills and surface impoundments. In 2016, the Water Infrastructure Improvements for the Nation Act (the "WIIN Act") was signed into law to address critical water infrastructure needs in the U.S. and contained a number of provisions related to CCRs. Among other things, the WIIN Act allowed, but did not require, states to develop and submit CCR permit programs for EPA approval, provided flexibility for states to incorporate EPA's 2015 rule for CCRs or develop other criteria that are at least as protective as EPA's rule, and required EPA to approve state permit programs within 180 days of submission by the state. Because states are not required to implement their own CCR permit programs, EPA was required to develop a federal permit program in states that chose not to implement a program, subject to congressional funding. Until state or federal permit programs are in effect, the 2015 rule continues to be self-implementing in nature, subject to enforcement by

Table of Contents



EPA or citizen groups. For facilities located within the boundaries of Native American reservations, such as the Navajo Nation where Four Corners is located, EPA is required to develop a federal permit program regardless of appropriated funds.

In 2018, EPA published a rule that constitutes "Phase One, Part One" of its ongoing reconsideration and revision of the 2015 CCR rule. The final Phase One, Part One rule extended the deadline to allow EGUs with unlined impoundments or that fail to meet the uppermost aquifer requirement to continue to receive coal ash until October 31, 2020, which was again extended by subsequent amendments. The rule also authorized a "Participating State Director" or EPA to approve suspension of groundwater monitoring requirements and to issue certifications related to the location restrictions, design criteria, groundwater monitoring, remedy selection and implementation. The rule also modified groundwater protection standards for certain constituents, which include cobalt, molybdenum, lithium, and lead without a maximum contamination level.

In 2019, EPA published a second round of proposed revisions, which are commonly referred to as the "Phase Two" revisions, to address reporting and accessibility to public information, "CCR piles" and "beneficial use" definitions, and the requirements for management of CCR piles. EPA reopened and extended the Phase Two comment period several times. To date, EPA has not yet finalized provisions in Phase Two related to beneficial use of CCR and CCR piles.

Since its Phase Two proposal, EPA has finalized three other rules addressing various CCR rule provisions. In 2020, EPA promulgated its proposed Holistic Approach to Closure Part A ("Part A"), which set forth a new deadline of April 11, 2021, for companies to initiate closure of unlined CCR impoundments. In accordance with the DC Circuit's vacatur of portions of the 2015 CCR Rule, Part A also changed the classification of compacted soil-lined or clay-lined surface impoundments from "lined" to "unlined", triggering closure or retrofit requirements for those impoundments. In addition, Part A delineated a process for owners/operators to submit requests for alternative closure deadlines.

EPA also issued the Holistic Approach to Closure Part B ("Part B") in 2020, which delineated the process for owners/operators to submit alternate liner demonstrations for clay-lined surface impoundments that could otherwise meet applicable requirements. This rule did not include beneficial use of CCR for closure, which EPA explained would be addressed in subsequent rulemaking actions. On May 18, 2023, EPA published a proposed rule establishing the regulatory requirements for inactive surface impoundments at inactive facilities and a new category of regulated unit called a CCR management unit ("CCRMU"), including groundwater monitoring, corrective action, closure, and post-closure care requirements for all CCR management units (regardless of how or when that CCR was placed), and several technical corrections to the existing regulations. Comments on the proposed rule were due July 17, 2023.

On May 8, 2024, EPA published a final rule that extended federal CCR regulatory requirements to (1) inactive CCR surface impoundments at inactive utilities and (2) CCRMU (Legacy Rule), including CCR impoundments and landfills that closed prior to the effective date of the 2015 CCR rule, inactive CCR landfills, and other areas where CCR was managed directly on the land. The rule became effective on November 8, 2024. EPA included deferral options for smaller CCRMU containing between one and 1,000 tons of CCR, CCRMU located beneath critical infrastructure or large buildings or structures vital to the continuation of current site activities, and CCRMU that closed prior to the effective date of the new rule (subject to certain eligibility conditions). EPA also codified the controversial definitions of infiltration and liquids that were litigated in the DC Circuit. Six petitions for review of the Legacy Rule were filed and were consolidated into one case by the DC Circuit. The Utility Solid Waste Activities Group, of which TXNM is a member, is a petitioner jointly with the National Rural Electric Cooperative Association, and American Public Power Association. The U.S. Supreme Court denied a requested stay of the rule by East Kentucky Power Cooperative. The DC Circuit agreed to hold the case in abeyance pending the outcome of EPA's reconsideration of the Legacy Rule, with status reports due on March 16, 2026, and at 90-day intervals thereafter. On July 22, 2025, EPA published a final rule and companion proposal revising the compliance deadlines for CCRMU requirements under the Legacy Rule. In September 2025, EPA withdrew the direct final rule due to adverse comments but subsequently issued a final extension rule on February 6, 2026, delaying the deadline to complete the "Facility Evaluation Report Part 1" until February 9, 2027, and extending all subsequent deadlines, as well. The final extension rule was published in the Federal Register on February 10, 2026.

As of the effective date of the Legacy Rule, one CCRMU was identified at SJGS. SJGS is required, at a minimum, to conduct a two-part evaluation of historic and current CCRMUs with reporting due dates of February 9, 2027, and February 8, 2028 (based on the new final extension rule), with each report posted to a company website by the due date.

At this time, PNM is still evaluating the financial impacts of this final regulation for Four Corners. Initial CCRMU site surveys and final site investigation reports are expected to be finalized by February 9, 2027. Based on the information available to the Company at this time, PNM cannot reasonably estimate the fair value of the entire CCRMU ARO. PNM cannot predict

Table of Contents



the outcome of the CCRMU site evaluations and investigations, or how these outcomes might affect the associated costs, which might have a material impact on PNM's operations, financial position, or cash flows.

In 2020, EPA published a proposed rule establishing a federal permitting program for the handling of CCR within the boundaries of Native American reservations and in states without their own federally authorized state programs. Permits for units within the boundaries of Native American reservations would be due 18 months after the effective date of the rule. EPA has not yet finalized the federal permitting program rule. EPA has coordinated with the affected permits for the three facilities with CCR disposal units located on Native American lands. PNM cannot predict the outcome of EPA's rulemaking activity or the outcome of any related litigation, and whether or how such a ruling would affect operations at Four Corners.

EPA's CCR rule does not cover mine placement of coal ash. In the preamble to its 2015 rule, EPA explained that the OSM and, as necessary, EPA would address the management of CCR in mine fills in a separate regulatory action, recognizing OSM's expertise in this area. EPA's decision to defer to OSM was based on a recommendation from the National Academy of Sciences ("NAS"), which was commissioned by Congress in 2006 to investigate the health, safety and environmental risks associated with the use of CCR for mine reclamation. The NRC report recommended that enforceable federal standards be established for the disposal of CCR in mine fills to ensure that states have specific authority and that states implement adequate safeguards. In 2007, OSM published an advance notice of proposed rulemaking on the placement of CCR at mine sites. In that notice, OSM explained its intent to develop the proposed regulations based on its existing authority under the Surface Mining Control and Reclamation Act. Since 2007, however, OSM has not taken any further action to advance this rulemaking. PNM cannot predict the outcome of OSM's proposed rulemaking regarding CCR regulation, including mine placement of CCRs, or whether OSM's actions will have a material impact on PNM's operations, financial position, or cash flows.

As noted above, SJGS does not operate any onsite CCR impoundments or landfills that are regulated under the 2015 CCR rule, and as of November 8, 2024, identified only one CCRMU that would potentially be regulated under the Legacy Rule. The CCR has since been removed from that unit and PNM will conduct the requisite site investigation reports. PNM would seek recovery from its retail customers of all CCR costs for jurisdictional assets that are ultimately incurred.

Utilities that own or operate CCR disposal units, such as those at Four Corners, as indicated above, were required to collect sufficient groundwater sampling data to initiate a detection monitoring program. Four Corners completed the analysis for its CCR disposal units, which identified several units that needed corrective action or needed to cease operations and initiate closure by April 11, 2021. Work is ongoing. Four Corners continues to gather additional groundwater data and perform remedial evaluations and activities. At this time, PNM does not anticipate its share of the cost to complete these corrective actions to close the CCR disposal units, or to gather and perform remedial evaluations on groundwater at Four Corners, will have a significant impact on its operations, financial position, or cash flows.

***Other Commitments and Contingencies***

**Coal Supply**

*Four Corners*

APS purchases all of Four Corners' coal requirements from NTEC, an entity owned by the Navajo Nation, under the Four Corners CSA that expires in 2031. The coal comes from reserves located within the Navajo Nation. The contract provides for pricing adjustments over its term based on economic indices and certain minimum payments that may be required if no deliveries of coal are taken. As of December 31, 2025, those minimum payments were $41.1 million for 2026, $85.7 million for 2027 and 2028, $91.0 million for 2029 and 2030, and $24.5 million for 2031. PNM's share of the coal costs is being recovered through the FPPAC.

*Coal Mine Reclamation*

As indicated under Coal Combustion Residuals Waste Disposal above, SJGS disposed of CCRs in the surface mine pits adjacent to the plant and Four Corners disposes of CCRs in ponds and dry storage areas.

Under the terms of the SJGS CSA, PNM and the other SJGS owners are obligated to compensate WSJ LLC for all reclamation costs associated with the supply of coal from the San Juan mine. PNM and Westmoreland have entered into an agreement under which mine reclamation services for SJGS would be provided. A mine reclamation cost study was completed in the first quarter of 2024 and PNM remeasured its liability, which resulted in an increase in overall reclamation costs of $20.9 million, due primarily to higher inflationary factors. As a result, PNM recorded the increase in the liability related to the underground mine of $17.0 million as a regulatory asset on the Consolidated Balance Sheets. Due to the NMPRC cap on the

Table of Contents



amount that can be collected from retail customers for final reclamation of the surface mines at $100.0 million, PNM was required to record $4.0 million of the increase related to the surface mine liability plus an additional $0.5 million, related to other costs, as a regulatory disallowance on the Consolidated Statements of Earnings for the year ended December 31, 2024. In the third quarter of 2024, PNM and Westmoreland amended the mine reclamation services agreement to update the base rates for the costs of reclamation activities, which resulted in an increase in overall reclamation costs of $12.1 million. As a result, PNM recorded the increase in the liability related to the underground mine of $6.0 million as regulatory assets on the Consolidated Balance Sheets and the increase of $6.1 million related to the surface mine as a regulatory disallowance on the Consolidated Statements of Earnings for the year ended December 31, 2024.

In 2025, PNM and Westmoreland amended the mine reclamation services agreement to update the capital recovery charges due in each year from 2025 through 2028, which resulted in an increase in overall reclamation costs. As a result, PNM recorded increases in the liabilities related to the underground mine of $0.2 million and the surface mine of $0.2 million. PNM recorded the increase in the liability related to the underground mine as a regulatory asset on the Condensed Consolidated Balance Sheets at December 31, 2025. PNM recorded the increase related to the surface mine liability as a regulatory disallowance on the Consolidated Statements of Earnings for the year ended December 31, 2025.

PNM's estimate of the costs necessary to reclaim the mine that serves SJGS is subject to many assumptions, including the timing of reclamation, generally accepted practices at the time reclamation activities occur, and current inflation and discount rates. PNM cannot predict the ultimate cost to reclaim the mine that serves SJGS and would seek to recover all costs related to reclaiming the underground mine from its customers but could be exposed to additional loss related to surface mine reclamation. In connection with certain mining permits relating to the operation of the San Juan mine, Westmoreland was required to post reclamation bonds of $118.7 million with the NMMMD. In order to facilitate the posting of reclamation bonds by sureties on behalf of Westmoreland, TXNM entered into the WFB LOC Facility under which letters of credit aggregating $19.3 million are outstanding as of December 31, 2025.

A coal mine reclamation study for the surface mine that serves Four Corners was completed in December 2024. The study reflected operation of the mine through 2031, the term of the Four Corners CSA. PNM remeasured its liability, which resulted in a decrease in overall reclamation costs of $1.6 million, due primarily to lower overhead costs, contractor management costs, and taxes and royalties. Due to the NMPRC cap on the amount that can be collected from retail customers for final reclamation of the surface mines at $100.0 million, PNM recorded the decrease related to the surface mine liability as a reduction in regulatory disallowance on the Consolidated Statements of Earnings for the year ended December 31, 2024. In 2025, APS provided an update to the cumulative MMBTU consumption for Four Corners for the purpose of allocating final mine reclamation costs. Based on the consumption outlook, PNM's forecasted share of final reclamation costs was reduced from 9.755% to 9.096%. As a result, PNM recorded a decrease in the liability related to the surface mine of $0.9 million on the Condensed Consolidated Balance Sheets at December 31, 2025. This decrease is also recorded as a $0.9 million reduction in regulatory disallowance on the Consolidated Statements of Earnings for the year ended December 31, 2025.

Based on the most recent estimates, PNM's remaining payments for mine reclamation, in future dollars, are estimated to be $30.6 million for the surface mines at both SJGS and Four Corners and $63.1 million for the underground mine at SJGS as of December 31, 2025. At December 31, 2025 and 2024, liabilities, in current dollars, of $20.8 million and $38.3 million for surface mine reclamation and $55.2 million and $52.9 million for underground mine reclamation were recorded in other deferred credits.

The SJGS owners are parties to a reclamation trust funds agreement to provide financial assurance for post-term coal mine reclamation obligations. The trust funds agreement requires each owner to enter into an individual trust agreement with a financial institution as trustee, create an irrevocable reclamation trust, and meet year-end funding targets set by funding curves that are approved by the SJGS ownership. PNM began using its mine reclamation trust to pay for final mine reclamation costs in April 2023. Because the trust agreement requires meeting specific funding targets at year end, it may be necessary for PNM to make additional contributions to meet those targets. PNM funded $7.0 million in 2025, $27.3 million in 2024, and $2.7 million in 2023. Based on PNM's reclamation trust fund balance at December 31, 2025, current forecasts, and current funding curve targets, PNM does not anticipate making any contributions in 2026 or 2027.

Under the Four Corners CSA, PNM is required to fund its share of estimated final reclamation costs in annual installments into an irrevocable escrow account solely dedicated to the final reclamation cost of the surface mine at Four Corners. PNM did not make any contributions to the escrow account in 2025. PNM funded $3.2 million in 2024 and $0.2 million in 2023 and anticipates providing additional funding of $0.5 million in 2026 and $0.5 million in 2027.

PNM recovers from retail customers' reclamation costs associated with the underground mine. However, the NMPRC capped the amount collected from retail customers for final reclamation of the surface mines at $100.0 million for both SJGS

Table of Contents



and Four Corners. If future estimates increase the liability for surface mine reclamation, the excess would be expensed at that time. The impacts of changes in New Mexico state law as a result of the enactment of the ETA and regulatory determinations made by the NMPRC may also affect PNM's financial position, results of operations, and cash flows. See additional discussion regarding PNM's SJGS and Four Corners Abandonment Applications in Note 17. PNM is currently unable to determine the outcome of these matters.

**SJGS Decommissioning**

On November 9, 2021, the San Juan County Commission approved the Coal-Fired Electricity Generating Facility Demolition and Remediation Ordinance ("Ordinance 121"), requiring the full demolition of SJGS upon its complete and permanent closure. Ordinance 121 required the SJGS owners to submit a proposed demolition and remediation plan no later than three months after SJGS was retired. The SJGS owners submitted the decommissioning and remediation plan on December 28, 2022. In connection with restructuring of the SJGS ownership on December 31, 2017, PNM and the other SJGS owners entered into the San Juan Decommissioning and Trust Funds Agreement, which requires PNM to fund its ownership share of final decommissioning costs into an irrevocable trust. Under the agreement, PNM made an initial funding of $14.7 million in December 2022 and made additional contribution of $7.0 million in 2024 and $4.7 million in 2025. The amount and timing of additional trust funding is subject to revised decommissioning cost studies and agreement among the SJGS owners. PNM began using its decommissioning trust to pay for demolition and decommissioning costs in October 2023. PNM has posted a surety bond in the amount of $46.0 million in connection with certain environmental decommissioning obligations and must maintain the bond or other financial assurance until those obligations are satisfied. The surety bond only represents a liability if the SJGS owners fail to deliver on its contractual liability.

PNM records its share of the SJGS decommissioning obligation as an ARO on its Consolidated Balance Sheets. Studies on the decommissioning costs of SJGS are performed periodically and revisions to the ARO liability are recorded. In the third quarter of 2022, a new decommissioning cost study was completed, which required PNM to remeasure its SJGS decommissioning ARO. The new study resulted in an estimated decrease to PNM's share of the decommissioning obligation of $21.1 million, which was recorded in September 2022.

On July 29, 2025, PNM received a letter from the NMED indicating that the NMED designated PNM as a responsible party and requiring a Stage 1 Abatement Plan ("S1AP") proposal for SJGS for groundwater and soil contamination associated with former operations at SJGS. On November 26, 2025, PNM submitted the S1AP to NMED that was approved on February 9, 2026. The S1AP estimates site investigation and monitoring to be completed by the first quarter of 2027. PNM is currently unable to determine the outcome of this matter.

**PVNGS Liability and Insurance Matters**

Public liability for incidents at nuclear power plants is governed by the Price-Anderson Nuclear Industries Indemnity Act, which limits the liability of nuclear reactor owners to the amount of insurance available from both commercial sources and an industry-wide retrospective payment plan. The insurance limit is subject to an adjustment every five years based upon the aggregate percentage change in the Consumer Price Index. The most recent adjustment took effect on January 1, 2024. As of that date, in accordance with this act, the PVNGS participants are insured against public liability exposure for a nuclear incident up to $16.3 billion per occurrence. PVNGS maintains the maximum available nuclear liability insurance in the amount of $500 million, which is provided by American Nuclear Insurers. The remaining $15.8 billion is provided through a mandatory industry-wide retrospective assessment program. If losses at any nuclear power plant covered by the program exceed the accumulated funds, PNM could be assessed retrospective premium adjustments. The maximum retrospective premium per reactor under the program for each nuclear liability incident is $165.9 million, subject to a maximum annual premium of $24.7 million per incident. Based on PNM's ownership interest in the three units, PNM's maximum retrospective premium per incident for all three units is $36.3 million, with a maximum annual payment limitation of $5.4 million, to be adjusted periodically for inflation.

The PVNGS participants maintain insurance for damage to and decontamination of, property at PVNGS in the aggregate amount of $2.8 billion, a substantial portion of which must first be applied to stabilization and decontamination. These coverages are provided by Nuclear Electric Insurance Limited ("NEIL"). The primary policy offered by NEIL contains a sublimit of $2.25 billion for non-nuclear property damage. If NEIL's losses in any policy year exceed accumulated funds, PNM is subject to retrospective premium adjustments of $5.3 million. The insurance coverages discussed in this, and the previous paragraph are subject to certain policy conditions, sublimits, and exclusions.

Table of Contents

**TXNM ENERGY, INC. AND SUBSIDIARIES**
**PUBLIC SERVICE COMPANY OF NEW MEXICO AND SUBSIDIARIES**
**TEXAS-NEW MEXICO POWER COMPANY AND SUBSIDIARIES**

**NOTES TO CONSOLIDATED FINANCIAL STATEMENTS**
**December 31, 2025, 2024 and 2023**

## 17) Regulatory and Rate Matters

The Company is involved in various regulatory matters, some of which contain contingencies that are subject to the same uncertainties as those described in Note 16.

### TXNM

*Merger Proceedings*

On August 25, 2025, TXNM filed applications for approval of its proposed Merger with Blackstone Infrastructure (Note 22) with the NMPRC, PUCT, and FERC. In addition to strong governance and oversight provisions, the applications include the following benefits for PNM and TNMP's customers:

Application to the NMPRC

- $105.0 million in retail rate credits to be paid over four years
- $10.0 million in additional contributions to the PNM Good Neighbor Fund to be paid over 10 years
- $35.0 million in economic development funding to be paid over 10 years
- $25.0 million commitment to innovative technologies to support New Mexico's transition to carbon-free energy
- PNM's continued strong community involvement and charitable giving

The NMPRC does not have a statutory timeframe for consideration of the application. On December 5, 2025, the deadline for intervention passed with 19 parties intervening in the matter. A hearing has been scheduled for May 4-15, 2026.

On February 6, 2026, a motion and brief for order was filed, directing the applicants to show cause and for other relief in the pending application with the NMPRC. The motion alleges that the purchase of $400.0 million of TXNM common stock (Note 7) violated Section 62-6-12 of the Public Utility Act because PNM did not receive prior approval of the purchase from the NMPRC. TXNM and PNM believe that the allegations in the motion do not constitute a violation of the Public Utility Act and filed responses in opposition to the motion on February 18, 2026. PNM cannot predict the outcome of this matter.

Application to the PUCT

- Rate credits of $35.0 million to be paid over four years
- $10.0 million in economic development funding to be paid over 10 years
- $5.0 million in additional community support over 10 years to enhance charitable giving

On December 11, 2025, TXNM and Blackstone Infrastructure reached a unanimous settlement with parties in its Merger proceeding filed with the PUCT. Terms of the settlement include additional financial oversight, corporate governance and regulatory protections that favor local communities and the current workforce. Additionally, the settlement removed the $10.0 million in economic development and the $5.0 million in charitable giving and increased the rate credits from $35.0 million to $45.5 million to be paid over four years. The settlement was approved by the PUCT on February 6, 2026.

Application to the FERC

On October 24, 2025, a protest was filed arguing that the proposed Merger posed significant risk of unlawful cross-subsidization, especially benefitting Blackstone Infrastructure's data centers and energy affiliates, and could harm competition, rates, and regulatory oversight. On November 10, 2025, TXNM and Blackstone Infrastructure filed a response contesting the arguments made in the protest. On December 23, 2025, FERC issued a deficiency letter requesting additional information on any ring-fencing provisions or regulations in place to protect customers from inappropriate cross-subsidization. On January 13, 2026, a response was submitted detailing the extensive ring-fencing provisions in place and relevant regulations set by the NMPRC and the PUCT.

On February 20, 2026, FERC approved the proposed Merger concluding that there is no adverse effect on competition, no adverse rate impacts, and no regulatory gap. FERC rejected claims related to data centers, private equity ownership, and speculative cross-subsidization relying on existing state ring-fencing protections in New Mexico and Texas.

Table of Contents

**TXNM ENERGY, INC. AND SUBSIDIARIES**
**PUBLIC SERVICE COMPANY OF NEW MEXICO AND SUBSIDIARIES**
**TEXAS-NEW MEXICO POWER COMPANY AND SUBSIDIARIES**

**NOTES TO CONSOLIDATED FINANCIAL STATEMENTS**
**December 31, 2025, 2024 and 2023**

**PNM**

*New Mexico General Rate Case*

*2025 Rate Request*

On June 14, 2024, PNM filed an application with the NMPRC for a general increase in retail electric rates. The proposed base rate changes would be implemented in two phases, with the first phase effective July 1, 2025, and the second phase effective January 1, 2026. Key aspects of PNM's request include:

- Recovery on total rate base of $3.0 billion, based on a FTY with the 12 months ending June 30, 2026
- An increase of $174.3 million in retail revenues, comprised of a $92.2 million increase in base rates and a $82.1 million increase in revenues collected under PNM's FPPAC
- Drivers of revenue deficiency:
  - Needed investments across distribution, transmission, and generation facilities to ensure safe, reliable delivery of electricity
  - Increased operations and maintenance expenses to meet operational needs, including wildfire risk mitigation
  - Costs associated with ESAs, previously approved by the NMPRC, necessary to serve our customers
  - ROE of 10.45%
  - Proposed capital structure of 52.5% equity
  - An increased cost of borrowing
  - Adjustments to Four Corners depreciation rates to recover remaining plant investments through July 2031, the expected abandonment date of the facility
- Proposed ratemaking treatment of ESAs to be recovered through PNM's FPPAC which began July 1, 2025

On November 26, 2024, PNM filed an unopposed comprehensive stipulation with the NMPRC. Key components agreed upon by the signatories are as follows:

- Overall revenue requirement increase of $105.0 million with the first phase effective July 1, 2025, and the second phase effective April 1, 2026
- ROE of 9.45%
- Capital structure of 51.0% equity
- Maintain currently approved depreciation rates for Four Corners as established in PNM's 2024 Rate Change and PNM's NM 2015 Rate Case
- Modification of PNM's current amortization period through December 31, 2028, on the unprotected Excess Deferred Federal Income Taxes ("EDFIT") regulatory liability to reflect amortization of remaining unprotected EDFIT through December 31, 2027
- Costs associated with ESAs shall be recovered through base rates
  - PNM will establish a regulatory asset or regulatory liability for the difference in actual ESA costs compared to the forecasted $82.1 million included in base rates in the test period and thereafter until new rates are effective from PNM's next general rate case filing. The regulatory asset or regulatory liability will be subject to NMPRC approval in PNM's next rate case
- PNM will establish a regulatory liability associated with investment tax credits for the Sandia energy storage system as proposed in its application
- PNM will establish a regulatory liability equal to the return on legacy meters currently included in rates, as the legacy meters are retired during PNM's deployment of its approved Grid Modernization Plan
- PNM will make a one-time shareholder contribution of $1.5 million to the Good Neighbor Fund

A hearing was held on February 17 and 18, 2025. On April 8, 2025, the hearing examiners issued a certification of stipulation recommending approval of the unopposed stipulation and on May 15, 2025, the NMPRC issued a final order adopting the unopposed stipulation. This matter is now concluded.

*2024 Rate Change*

On December 5, 2022, PNM filed an application with the NMPRC for a general increase in retail electric rates including recovery on total rate base of $2.7 billion based on a calendar year 2024 FTY, an increase of $63.8 million in retail non-fuel revenues, and an ROE 10.25%. The application also proposed ratemaking treatment of PVNGS Leased Interest and testimony supporting the prudence of PNM's decisions to renew the five leases and repurchase 64.1 MW of PVNGS Unit 2 capacity.

Table of Contents

**TXNM ENERGY, INC. AND SUBSIDIARIES**
**PUBLIC SERVICE COMPANY OF NEW MEXICO AND SUBSIDIARIES**
**TEXAS-NEW MEXICO POWER COMPANY AND SUBSIDIARIES**

**NOTES TO CONSOLIDATED FINANCIAL STATEMENTS**
**December 31, 2025, 2024 and 2023**

On January 3, 2024, the NMPRC issued a final order authorizing PNM to implement an increase in non-fuel base rates of $15.3 million, effective for service beginning January 15, 2024. The final order included:

- A ROE of 9.26%
- A capital structure of 49.61% equity, 50.10% debt, and 0.29% preferred stock
- Finding of imprudence regarding PNM's decision to remain in Four Corners and a remedy for the imprudence resulting in a disallowance of $81.0 million to PNM's total Four Corners net book value
- Approval of $51.3 million of PNM's requested $96.3 million regulatory asset for PVNGS undepreciated investments, but disallowance of a return on the remaining $45.0 million or any CWIP associated with it
- Requiring that the $38.4 million regulatory liability associated with leased capacity at PVNGS after the Unit 1 lease expired on January 15, 2023, be returned to ratepayers over two years through a separate rate rider
- The approval of new depreciation rates, reflecting shorter useful lives, of PNM's gas plants with service lives and depreciable lives extending beyond January 1, 2045, which would include PNM's La Luz and Luna generating stations
- The approval of PNM's TOD pilot program, with a requirement to make annual compliance filings and to adjust certain rate schedules

As a result of the final order, PNM recorded a regulatory disallowance of $55.5 million on the Consolidated Statement of Earnings and a corresponding reduction to Utility Plant in the year ended December 31, 2023, after accounting for previous impairments, to reflect the remedy adopted in the Final Order for Four Corners. In addition, PNM had recorded a reduction to electric operating revenues of $38.4 million with a corresponding increase to current regulatory liability of $19.2 million and deferred regulatory liability of $19.2 million for the PVNGS rate refunds that are being returned to customers over a two-year period ending March 2026. PNM had also recorded a regulatory disallowance of $8.2 million and a corresponding reduction to Utility Plant for the disallowance of CWIP from PVNGS.

In March 2024, notice of appeals were separately filed with the NM Supreme Court by NEE and PNM, and a joint notice of appeal was filed by the NM Department of Justice, Bernalillo County, and ABCWUA. NEE's appeal was subsequently consolidated with the joint notice of appeal. In the statements of issues submitted in the parties' appellate dockets, PNM took issue with the NMPRC's ruling on capital structure; other appellants primarily challenged the NMPRC rulings related to Four Corners and Palo Verde cost recovery. On June 20, 2025, PNM filed an uncontested motion to dismiss its appeal. The NM Supreme Court granted PNM's uncontested motion to dismiss its appeal, and on September 25, 2025, issued a ruling rejecting the consolidated appeal and upholding the NMPRC's final order. This matter is now concluded.

*Renewable Energy Portfolio Standard*

As discussed in Note 16, the ETA amends the REA including removal of diversity requirements and certain customer caps and exemptions relating to the application of the RPS under the REA. The REA provides for streamlined proceedings for approval of utilities' renewable energy procurement plans, assures that utilities recover costs incurred consistent with approved procurement plans, and requires the NMPRC to establish a Reasonable Cost Threshold ("RCT") for the procurement of renewable resources to prevent excessive costs being added to rates. The ETA sets a RCT of $60 per MWh, adjusted for inflation, using an average annual levelized resource cost basis. PNM makes renewable procurements consistent with the NMPRC approved plans and recovers certain renewable procurement costs from customers through the renewable energy rider billed on a KWh basis.

The following sets forth PNM's revenues recorded for the renewable energy rider:

| Effective date | Proposed Revenue Collection | Annual Revenues Recorded |
|---|---|---|
| | (In millions) | |
| January 1, 2023 | $61.0 | $56.9 |
| January 1, 2024 | 59.0 | 52.0 |
| January 1, 2025 | 58.7 | 57.7 |

Under the renewable rider, if PNM's earned rate of return on jurisdictional equity in a calendar year, adjusted for items not representative of normal operations, exceeds the NMPRC-approved rate by 0.5%, PNM is required to refund the excess to customers during May through December of the following year. PNM did not exceed such limitation in 2024 and does not expect to exceed the limitation in 2025. On May 30, 2025, PNM filed its application for its 2026 renewable energy procurement plan, requesting to collect $54.3 million for the year. On September 25, 2025, the Hearing Examiners issued an

Table of Contents



RD recommending approval of PNM's application with no significant modifications and on October 30, 2025, the NMPRC issued a Final Order approving the application as filed.

*Energy Efficiency and Load Management*

*Program Costs and Incentives/Disincentives*

The EUEA requires public utilities to achieve specified levels of energy savings and to obtain NMPRC approval to implement energy efficiency and load management programs. The EUEA also requires the NMPRC to remove utility disincentives to implementing energy efficiency and load management programs and to provide incentives for such programs. The EUEA was amended to, among other things, include a decoupling mechanism for disincentives, preclude a reduction to a utility's ROE based on approval of disincentive or incentive mechanisms, establish energy savings targets for the period 2021 through 2025, and require that annual program funding be 3% to 5% of an electric utility's annual customer bills excluding gross receipt taxes, franchise and right-of-way access fees, provided that a customer's annual cost does not exceed seventy-five thousand dollars.

In 2020, PNM received approval for energy efficiency and load management programs to be offered in 2021, 2022, and 2023. The program included an annual base incentive of 7.1% of the portfolio budget if PNM were to achieve energy savings of at least 80 GWh in a year. The incentive increases if PNM is able to achieve savings greater than 94 GWh in a year.

| Program year | Annual budget |
|---|---|
| | (In millions) |
| 2021 | $31.4 |
| 2022 | 31.0 |
| 2023 | 29.6 |

In 2024, PNM received approval for energy efficiency and load management programs to be offered in 2024, 2025, and 2026 (the "2024 Plan"). The 2024 Plan proposed to continue ten existing energy efficiency programs with modifications and an annual base incentive of 7.1% of the portfolio budget and a sliding scale that provides additional incentive for additional energy saved as a percentage of program cost, up to the maximum allowed by the energy efficiency rule which for PNM is 8.82%.

| Program year | Annual budget |
|---|---|
| | (In millions) |
| 2024 | $34.5 |
| 2025 | 35.4 |
| 2026 | 36.5 |

On December 18, 2025, the NMPRC approved PNM's motion requesting an increase to the previously approved 2025 annual budget of approximately 10% to $38.9 million.

*Integrated Resource Plans*

NMPRC rules require that investor-owned utilities file an IRP every three years that covers a 20-year planning period and contains an action plan covering the first three years of that period. The IRP establishes a collaborative facilitated process for a utility and stakeholders to agree on a statement of need for potential new or additional resources, as well as an action plan to guide procurement or development of resources to meet the stated need. A most-cost-effective portfolio of resources shall be derived from the statement of need analysis. The statement of need and action plan must be accepted before the utility begins the resource solicitation process pursuant to the IRP Rule. Following acceptance of the statement of need and action plan, a utility will provide the NMPRC and intervenors drafts of the RFP and a timeline for issuing, receiving, evaluating, and ranking bids. The NMPRC will then appoint an Independent Monitor ("IM") to oversee the RFP process, which allows for parties and the IM to comment on the RFP consistency with the IRP, after which the utility issues the RFP. Within 120 days of receiving bids the utility shall provide the IM with results including pricing and non-price evaluation criteria, ranking of bids, chosen portfolio and alternatives that also meet the needs; the IM then rules on the fairness of the RFP execution. Acceptance of the statement of need and action plan will not constitute a finding of prudency or pre-approval of costs associated with the additional resources. Following the RFP and IM processes, the utility may apply for approvals, and any costs incurred to implement the action plan will be considered in a general rate case and/or resource acquisition proceeding.

Table of Contents

**TXNM ENERGY, INC. AND SUBSIDIARIES**
**PUBLIC SERVICE COMPANY OF NEW MEXICO AND SUBSIDIARIES**
**TEXAS-NEW MEXICO POWER COMPANY AND SUBSIDIARIES**

**NOTES TO CONSOLIDATED FINANCIAL STATEMENTS**
**December 31, 2025, 2024 and 2023**

*2023 IRP*

On December 15, 2023, PNM filed its 2023 IRP with a continued focus on a carbon-free energy system by 2040. The plan highlighted the need for the sustained addition of significant resources over the next two decades, replacing retiring or expiring capacity, meeting concurrent load growth, while reducing the carbon intensity of PNM's portfolio. On April 4, 2024, the NMPRC accepted PNM's 2023 IRP.

On December 30, 2024, PNM issued its 2029-2032 RFP for at least 900 MW of new energy resources to come online between 2029 and 2032, with at least 500 MW needed by 2030. The RFP is consistent with the needs identified in PNM's 2023 IRP, which identified a range of 900 to 2,900 MW of new capacity needed by 2032, depending on the type of resources selected. The 2029-2032 RFP is anticipated to identify potential replacement resources for PNM's current natural gas generation capacity as well as PNM's ownership interest in Four Corners. On January 2, 2026, PNM filed a Notice of Material Event for the 2023 IRP to inform the NMPRC of its intent to issue a supplemental RFP for gas-fired resources in response to new customer requirements that have accelerated and increased energy demands beyond previously forecasted resources. On February 4, 2026, the IM appointed to the 2029-2032 RFP concluded that PNM appropriately evaluated the bids, made reasonable portfolio selection decisions, and overall, the RFP process was conducted in a fair, transparent manner that was in compliance with regulatory requirements.

*Abandonment Applications made under the ETA*

As discussed in Note 16, the ETA provides for a transition from fossil-fueled generating resources to renewable and carbon-free resources by allowing utilities to issue energy transition bonds related to the retirement of certain coal-fired generating facilities, to qualified investors.

*SJGS Abandonment Application*

In 2019, PNM filed a Consolidated Application for the Abandonment and Replacement of SJGS and Related Securitized Financing Pursuant to the ETA. In 2023, PNM, along with intervening parties, reached a unanimous settlement which was approved by the NMPRC. As a result, PNM recorded a $128.7 million reduction to electric operating revenues in the Consolidated Statement of Earnings and a corresponding current regulatory liability on the Consolidated Balance Sheets as of and for the year ended December 31, 2023. In addition, PNM recorded a regulatory disallowance of $3.3 million on the Consolidated Statement of Earnings and a corresponding decrease to deferred regulatory assets on the Consolidated Balance Sheets as of and for the year ended December 31, 2023, to reflect PNM's agreement to withdraw its request for regulatory assets associated with prefunding of ETA state administered funds and legal costs associated with this matter.

*Four Corners Abandonment Application*

In 2020, PNM entered into the Four Corners Purchase and Sale Agreement with NTEC, pursuant to which PNM agreed to sell its 13% ownership interest (other than certain transmission assets) in Four Corners to NTEC, contingent upon NMPRC approval. In connection with the sale, PNM would make payments of $75.0 million to NTEC for relief from its obligations under the coal supply agreement for Four Corners after December 31, 2024. PNM made an initial payment to NTEC of $15.0 million in November 2020, subject to refund with interest upon termination of the Four Corners Purchase and Sale Agreement prior to closing. Under the terms of the Four Corners Purchase and Sale Agreement, upon receipt of the NMPRC approval, PNM was expected to make a final payment of $60.0 million.

On January 8, 2021, PNM filed the Four Corners Abandonment Application, which sought NMPRC approval to exit PNM's share of Four Corners as of December 31, 2024, and issuance of approximately $300 million of Securitized Bonds as provided by the ETA. On December 15, 2021, the NMPRC issued a final order denying approval of the Four Corners Abandonment Application and the corresponding request for issuance of securitized financing. On December 22, 2021, PNM filed a Notice of Appeal with the NM Supreme Court of the NMPRC decision to deny the application and on July 6, 2023, the NM Supreme Court affirmed the NMPRC decision concluding that the NMPRC reasonably and lawfully denied PNM's application for abandonment. As a result of the NM Supreme Court's decision to uphold the NMPRC's denial, the Consolidated Statements of Earnings for the year ended December 31, 2023, reflect a regulatory disallowance of $3.7 million. On April 23, 2024, PNM filed an interim notice informing the NMPRC that PNM's updated analysis indicates it is in the interest of customers for PNM to remain as a participant in Four Corners until the expiration of the current coal supply agreement in 2031. In August 2024, PNM and NTEC terminated the Four Corners Purchase and Sale Agreement and executed an agreement for the reimbursement of PNM's initial $15.0 million payment with interest, which was paid in 2024.

Table of Contents

**TXNM ENERGY, INC. AND SUBSIDIARIES**
**PUBLIC SERVICE COMPANY OF NEW MEXICO AND SUBSIDIARIES**
**TEXAS-NEW MEXICO POWER COMPANY AND SUBSIDIARIES**

**NOTES TO CONSOLIDATED FINANCIAL STATEMENTS**
**December 31, 2025, 2024 and 2023**

*2028 Resource Application*

On November 22, 2024, PNM filed an application with the NMPRC seeking approval of ESAs, a PPA, and a CCN for system resources in 2028 to be available to meet summer 2028 customer needs. PNM's request included:

- Two 150 MW ESAs
- A 167 MW PPA for the Valencia power plant through 2039
- A CCN for a 100 MW solar facility and a 30 MW battery to be PNM-owned and located in San Juan County; the request provides the opportunity to increase the 30 MW battery by an additional 20 MW

On March 12, 2025, PNM and intervening parties filed an unopposed comprehensive stipulation with the NMPRC. The stipulation supports approval of PNM's application, including the proposed option to increase the 30 MW battery by an additional 20 MW. On May 6, 2025, the hearing examiners issued a certification of stipulation recommending approval of the unopposed stipulation and on June 26, 2025, the NMPRC approved the unopposed stipulation. This matter is now concluded.

*Grid Modernization Plan*

In October 2022, in compliance with New Mexico Grid Modernization Statute, PNM filed its Grid Modernization Plan with the NMPRC. The projects included in the application improve customers' ability to customize their use of energy and ensure that customers, including low-income customers, are a top priority and will benefit consistent with the Grid Modernization Statute. PNM's proposal to modernize its electricity grid through infrastructure and technology improvements also increases the efficiency, reliability, resilience, and security of PNM's electric system. PNM's application included grid modernization investments of approximately $344 million for the first six years of a broader 11-year strategy. The approved rate rider will recover capital costs, operating expenses, and taxes associated with the investments included in the Grid Modernization Plan. On October 17, 2024, the NMPRC issued a final order largely approving PNM's Grid Modernization Plan with minor modifications.

On June 20, 2025, PNM filed its first annual Grid Modernization Plan Review to provide updates on year one implementation progress and outline planned activities for year two, in alignment with regulatory expectations. Additionally, PNM has updated key portions of the forecasted strategy including increasing investments from approximately $344 million to $367 million in the first six years, while decreasing projected operations and maintenance costs by approximately 18%. On February 26, 2026, the NMPRC approved PNM's first annual Grid Modernization Review and the updated year two revenue requirement. This matter is now concluded.

*FERC Order 864*

In November 2019, FERC issued Order No. 864, which required public utility transmission providers with transmission formula rates to revise those rates to account for changes resulting from the Tax Cuts and Jobs Act of 2017 (the "Tax Act"). PNM has already made revisions to its formula rate to account for Tax Act changes, and, as a result of the Order, PNM proposed additional changes to its formula rate to implement the remaining requirements of the Order. In July 2022, FERC issued an order finding that PNM had predominantly complied with the requirements but set aside certain matters for settlement and hearing procedures.

On November 22, 2023, PNM, on behalf of the settling parties, filed a settlement agreement with FERC resolving all issues. As a result of the settlement agreement, PNM recorded a decrease of $3.2 million to electric operating revenues and an increase to interest charges of $0.3 million on the Consolidated Statement of Earnings and an increase to other current liabilities of $3.5 million on the Consolidated Balance Sheets as of and for the year ended December 31, 2023. This matter is now concluded.

*EDAM*

PNM participates in the EIM, a real-time wholesale energy trading market operated by the CAISO, that enables participating electric utilities to buy and sell energy. EDAM is a voluntary day-ahead regional market that expands on CAISO's EIM market, which PNM plans on joining in the fall of 2027. On August 22, 2025, PNM filed an application with the NMPRC requesting approval to create a regulatory asset for the costs associated with joining the EDAM, which was approved in an accounting order issued on October 16, 2025. PNM expects to seek recovery of these costs in a future rate case.

Table of Contents



*Meta Platforms Inc. Data Center - Phase IV*

PNM has a special service contract to provide service to Meta for a data center in PNM's service area. Meta's service requirements include the acquisition by PNM of a sufficient amount of new renewable energy resources and RECs to match the energy and capacity requirements of the data center. The cost of renewable energy procured is passed through to Meta under a rate rider. A special service rate is applied to Meta's energy consumption in those hours of the month when their consumption exceeds the energy production from the renewable resources.

On June 13, 2025, PNM filed an application with the NMPRC for an amended special service contract, PPAs, ESAs, special service rate, and an amended rate rider to service a new phase of the data center, the Greater Kudo, LLC Data Center. This amended special service contract requests:

- three 20-year solar PPAs totaling 290 MW
- three 20-year ESAs totaling 268 MW of storage
- a third revised and restated special service contract with Greater Kudo, LLC Data Center
- updates to the special service rate - Renewable Energy Resources, the Green Energy Rider, and the Production Cost Allocation Rider

On July 3, 2025, a procedural order was issued and on October 21, 2025, a prehearing conference was held where all parties agreed that a public hearing was unnecessary and that the evidence on record was sufficient to support a RD. On December 18, 2025, the NMPRC issued a final order approving PNM's application in its entirety.

*BESS Project*

On August 6, 2025, PNM filed an application with the NMPRC for approval of a CCN to construct, own, and operate 30 MWs of energy storage. The application consists of 6 MW batteries to be constructed at five existing PNM-owned solar facilities located in Otero County, San Miguel County, Luna County, and two sites in Valencia County. PNM estimates that the Battery Energy Storage System ("BESS") Project will cost $78.7 million and will assist in serving our summer peak season when operational. PNM expects to seek recovery of these costs in a future rate case.

*SB 170 Projects*

The enactment of Senate Bill 170 ("SB 170") allows a utility to defer costs of economic development projects that serve sites certified by the New Mexico Economic Development Department ("NMEDD"). On December 29, 2025, PNM filed an application with the NMPRC for approval of two economic development projects including the Westpointe and Mesa Del Sol Substations and the issuance of an accounting order to defer the costs of the projects as regulatory assets. The projects are estimated to cost $165.5 million and are expected to be reviewed in a future rate proceeding.

*Rio Puerco-Pajarito-Prosperity CCN*

On December 30, 2025, PNM filed an application with the NMPRC for approval of a CCN and a determination for a new right-of-way. The CCN encompasses a new 345 kV transmission line, existing station expansions, and a new substation. This project aims to enhance reliability and resilience in the Albuquerque area, facilitate the integration of renewable energy, and support economic development. On February 13, 2026, the NMPRC dismissed the application without prejudice and on February 25, 2026, PNM filed a new application for approval of the CCN providing additional clarity and more information on the project. The estimated cost of the project is approximately $247 million and is expected to be reviewed in a future rate proceeding.

**TNMP**

*TNMP Base Rate Review*

On November 14, 2025, TNMP filed a general rate proceeding with the PUCT (the "TNMP Base Rate Review") requesting recovery of $2.8 billion of rate base as of June 30, 2025, a requested ROE of 10.4%, and a 47.54% equity ratio. The TNMP Base Rate Review also includes increases in operations and maintenance expenses that are not recovered through semi-annual TCOS and DCRF filings, excludes increases in interest expense resulting from refinancing of debt associated with the proposed Merger, and requests recovery of $20.5 million associated with Hurricane Beryl restoration costs over a five-year period. If approved by the PUCT, the new rates are expected to become effective in mid-2026. A hearing has been set for March 9, 2026.

Table of Contents

**TXNM ENERGY, INC. AND SUBSIDIARIES**
**PUBLIC SERVICE COMPANY OF NEW MEXICO AND SUBSIDIARIES**
**TEXAS-NEW MEXICO POWER COMPANY AND SUBSIDIARIES**

**NOTES TO CONSOLIDATED FINANCIAL STATEMENTS**
**December 31, 2025, 2024 and 2023**

*Energy Efficiency*

TNMP recovers the costs of its energy efficiency programs through an energy efficiency cost recovery factor ("EECRF"), which includes projected program costs, under or over collected costs from prior years, rate case expenses, and performance bonuses (if the programs exceed mandated savings goals).

The following sets forth TNMP's EECRF increases:

| Effective Date | Aggregate Collection Amount | Performance Bonus |
|---|---|---|
| | (In millions) | |
| March 1, 2023 | $7.3 | $1.9 |
| March 1, 2024 | 6.6 | 1.2 |
| March 1, 2025 | 7.0 | 1.3 |

On May 30, 2025, TNMP filed its request to adjust the EECRF to reflect changes in costs for 2026. On November 14, 2025, the PUCT approved the total amount requested, authorizing recovery of $8.1 million, including a performance bonus of $2.5 million based on TNMP's energy efficiency achievements in the 2024 plan year.

*Transmission Cost of Service Rates*

TNMP can update its TCOS rates twice per year to reflect changes in its invested capital although updates are not allowed while a general rate case is in process. Updated rates reflect the addition and retirement of transmission facilities, including appropriate depreciation, federal income tax and other associated taxes, and the approved rate of return on such facilities. The following sets forth TNMP's recent interim transmission cost rate increases:

| Effective Date | Approved Increase in Rate Base | Annual Increase in Revenue |
|---|---|---|
| | (In millions) | |
| May 12, 2023 | $150.5 | $19.4 |
| September 6, 2023 | 21.4 | 4.2 |
| March 15, 2024 | 97.4 | 13.1 |
| September 20, 2024 | 20.6 | 3.9 |
| March 25, 2025 | 83.5 | 11.5 |
| September 19, 2025 | 87.4 | 12.3 |

*Periodic Distribution Rate Adjustment*

PUCT rules permit interim rate adjustments to reflect changes in investments in distribution assets. Historically, distribution utilities have been restricted to a single, annual periodic rate adjustment through a DCRF submitted between April 1 and April 8 of each year as long as the electric utility was not earning more than its authorized rate of return using weather-normalized data. However, the recent passage of Senate Bill 1015 now permits DCRF proceedings to be filed twice per year with a 60-day administrative deadline that can be extended for 15 days on good cause. Additionally, a DCRF may be filed during a pending rate case proceeding as long as that DCRF request is not filed until the 185th day after the rate case proceeding was initiated. The following sets forth TNMP's recent interim distribution rate increases:

| Effective Date | Approved Increase in Rate Base | Annual Increase in Revenue |
|---|---|---|
| | (In millions) | |
| September 1, 2023 | $157.0 | $14.5 |
| July 28, 2024 | 205.9 | 15.6 |
| November 17, 2024 | 43.7 | 7.7 |
| June 29, 2025 | 176.6 | 25.0 |
| December 29, 2025 | 18.9 | 1.8 |

Table of Contents

**TXNM ENERGY, INC. AND SUBSIDIARIES**
**PUBLIC SERVICE COMPANY OF NEW MEXICO AND SUBSIDIARIES**
**TEXAS-NEW MEXICO POWER COMPANY AND SUBSIDIARIES**

**NOTES TO CONSOLIDATED FINANCIAL STATEMENTS**
**December 31, 2025, 2024 and 2023**

*HB 5247*

On June 20, 2025, Texas House Bill 5247 ("HB 5247") was signed into law by Governor Gregg Abbott. HB 5247, which took effect immediately, added Section 36.216 to the Public Regulatory Act ("PURA 36.216"), authorizing certain electric utilities with total capital expenditures that exceeded 300 percent of annual depreciation in a calendar year, to elect, in the following calendar year, to file a single, annual proceeding to adjust nonfuel rates on a system-wide basis to reflect changes in transmission and distribution rates previously authorized under certain other interim rate mechanisms. A utility seeking to make this election under PURA 36.216 is required to file a notice with the PUCT informing them of its intent and provide supporting documentation of the applicable capital expenditures at least 60 days before filing the single, annual proceeding and correspondingly must notify the PUCT if the utility determines that it no longer qualifies for continued use of the election. Management has evaluated the application of HB 5247 and PURA 36.216 and determined that TNMP qualifies as the type of electric utility that would be eligible for the election. Upon completion of its general rate proceeding discussed above, TNMP expects to make its first comprehensive filing under Section 36.216 with a view towards recovering costs associated with eligible transmission and distribution investments that were placed into service after December 31, 2024, and that are not currently reflected in rates. In the interim, TNMP is recognizing a regulatory asset for costs associated with eligible transmission and distribution capital investments and is offsetting depreciation, property tax expense, and carrying costs within alternative revenue. At December 31, 2025 the regulatory asset associated with these costs totaled $17.5 million.

*3G Meters Notice of Violation*

In 2020, the PUCT established the COVID-19 Electricity Relief Program for electric utilities, REPs, and customers impacted by COVID-19. The program allowed providers to implement a rider to collect unpaid residential retail customer bills and to establish a regulatory asset for costs related to COVID-19. These costs included but were not limited to costs related to unpaid accounts.

In December 2023, TNMP and the PUCT reached a settlement agreement related to a notice of violation against TNMP primarily for estimating 3G meters during the period that TNMP was remediating the meters. TNMP maintained that the remediation efforts were impacted by supply chain and labor availability issues resulting from COVID-19. Pursuant to the settlement agreement, TNMP agreed to no longer pursue the recovery of COVID-19 related costs that were recorded as a regulatory asset. This resulted in a regulatory disallowance of $1.2 million recorded for the year ended December 31, 2023.

*Hurricane Beryl*

On July 8, 2024, Hurricane Beryl made landfall in the Texas Gulf Coast leaving approximately 116,000 customers in the TNMP service area without power. As of December 31, 2025 and 2024, TNMP had incurred $54.0 million and $53.1 million of costs, of which $33.5 million and $32.1 million had been recorded in Utility Plant and $20.5 million and $21.0 million had been recorded as a Regulatory Asset on the Consolidated Balance Sheets. These costs were included in the TNMP Base Rate Review filed on November 14, 2025.

*System Resiliency Plan ("SRP")*

In 2023, the Texas Legislature enacted House Bill No, 2555 ("HB 2555"), permitting an electric utility to seek approval of, and cost recovery for, a system resiliency plan. On August 28, 2024, TNMP filed its first SRP with the PUCT designed to benefit customers through enhanced resiliency of its distribution system, as intended under HB 2555. The SRP includes approximately $600 million of capital investments and approximately $151 million of other related costs over three years and was developed using a comprehensive and data-driven approach which evaluated various types of resiliency events posing material risk to the safe and reliable operation of TNMP's distribution system. TNMP's service territory includes non-contiguous areas across different regions of Texas, ranging from small communities and rural areas to communities around large metropolitan areas, each with unique risks. Investments in the SRP are prioritized based on customer benefit, physical protection of infrastructure, foundational investments in operational and cybersecurity technologies, and wildfire risk reduction and are focused on lower-performing areas in the context of reliability. Eight different resiliency measures are outlined in the SRP with associated programs and infrastructure impacts to improve the system's ability to prevent, withstand, mitigate and/or more promptly recover from resiliency events: distribution system resiliency, distribution system protection modernization, vegetation management, wildfire mitigation, flood mitigation, enhanced operations system technology, cybersecurity, and physical security resiliency. Recovery of investments and costs are permissible primarily through semi-annual DCRF filings, with deferral of depreciation and other certain expenses until recovery begins.

Table of Contents



On December 11, 2024, TNMP filed an unopposed settlement with the PUCT. The settlement includes $565.8 million of capital investments over 2025 through 2027, reflecting 94% of TNMP's proposed plan investments. The settlement also encompasses $128.2 million of operations and maintenance expenses associated with several programs, including vegetation management and wildfire mitigation. On March 26, 2025, TNMP received the final order from the PUCT which included modifications reflecting capital investments of $545.8 million and $86.1 million of operating and maintenance costs. As of December 31, 2025, TNMP incurred $10.3 million of operating and maintenance costs, all of which have been recorded as a Regulatory Asset on the Condensed Consolidated Balance Sheets. TNMP will seek collection of such costs in a future regulatory proceeding.

*Sales and Use Tax Refund*

On March 12, 2025, TNMP filed a refund claim with the Texas Comptroller's office for overpaid sales and use taxes primarily related to asset purchases. The $34.6 million refund claim covers periods from January 2022 to October 2024 and amounts received, net of consultant fees, are expected to be applied to 2025 TNMP capital projects. On September 22, 2025, TNMP received the requested refund net of $7.5 million in consultant fees; $24.7 million was applied to 2025 TNMP capital projects; $2.1 million to offset related interest expense; and $0.3 million for other related expenses.

## (18) Income Taxes

### Federal Income Tax Reform

In 2017, comprehensive changes in U.S. federal income taxes were enacted through legislation commonly known as the Tax Cuts and Jobs Act (the "Tax Act"). The Tax Act made many significant modifications to the tax laws, including reducing the federal corporate income tax rate from 35% to 21% effective January 1, 2018. The Tax Act also eliminated federal bonus depreciation for utilities, limited interest deductibility for non-utility businesses and limited the deductibility of officer compensation. During 2020, the IRS issued final regulations related to certain officer compensation and, in January 2021, issued final regulations on interest deductibility that provide a 10% "de minimis" exception that allows entities with predominantly regulated activities to fully deduct interest expenses.

As a result of the change in the federal income tax rate, the Company re-measured and adjusted its deferred tax assets and liabilities as of December 31, 2017. The portion of that adjustment not related to PNM's and TNMP's regulated activities was recorded as a reduction in net deferred tax assets and an increase in income tax expense. The portion related to PNM's and TNMP's regulated activities was recorded as a reduction in net deferred tax liabilities and an increase in regulatory liabilities.

Beginning February 2018, PNM's NM 2016 Rate Case reflected the reduction in the federal and state corporate income tax rates, including amortization of excess deferred federal and state income taxes. In accordance with the order in that case and amortization requirements of the tax laws, PNM is returning the protected portion of excess deferred federal income taxes to customers over the average remaining life of plant in service as of December 31, 2017. The remaining balance of the unprotected portion of excess deferred federal income taxes, which was being returned to customers over a period of approximately twenty-three years, will be returned over a five-year period when new rates go into effect from the 2024 Rate Change. Excess deferred state income taxes were returned to customers over a three-year period, which concluded in the first quarter of 2021. The approved settlement in the TNMP 2018 Rate Case includes a reduction in customer rates to reflect the impacts of the Tax Act beginning on January 1, 2019. TXNM, PNM, and TNMP amortized federal excess deferred income taxes of $25.7 million, $23.0 million, and $2.7 million in 2025.

On July 4, 2025, changes in U.S. federal income tax laws were enacted through the OBBBA. The OBBBA generally extends and makes permanent the changes from the Tax Act, including maintaining the 21% corporate tax rate, interest deductibility for regulated electric utilities, and state and local tax deductibility. The OBBBA also accelerates the phase-out of certain Inflation Reduction Act of 2022 energy tax credits and restricts the availability of credits for "foreign entities of concern." As a result, TXNM anticipates potentially higher costs associated with any future renewable energy development but does not expect other aspects of the OBBBA to have a material impact on its financial statements.

Table of Contents

**TXNM ENERGY, INC. AND SUBSIDIARIES**
**PUBLIC SERVICE COMPANY OF NEW MEXICO AND SUBSIDIARIES**
**TEXAS-NEW MEXICO POWER COMPANY AND SUBSIDIARIES**

**NOTES TO CONSOLIDATED FINANCIAL STATEMENTS**
**December 31, 2025, 2024 and 2023**

**TXNM**

TXNM's income taxes (benefits) consist of the following components:

| | Year Ended December 31, | | |
|---|---|---|---|
| | 2025 | 2024 | 2023 |
| | (In thousands) | | |
| U.S. Income from continuing operations before income taxes (benefits) | $ 180,013 | $ 280,240 | $ 90,529 |
| Current tax expense (benefit) | | | |
| U.S. federal | $ — | $ — | $ — |
| U.S. state | 1,712 | (1,984) | (2,841) |
| Total current tax expense (benefit) | 1,712 | (1,984) | (2,841) |
| Deferred tax expense (benefit) | | | |
| U.S. federal | 6,284 | 13,042 | (11,503) |
| U.S. state | 2,360 | 10,630 | (825) |
| U.S. amortization of accumulated investment tax credits | (169) | (170) | (1,181) |
| Total deferred tax expense (benefit) | 8,475 | 23,502 | (13,509) |
| Total income taxes (benefits) | $ 10,187 | $ 21,518 | $ (16,350) |

TXNM's provision for income taxes (benefits) differed from the federal income tax computed at the statutory rate for each of the years shown. The differences are attributable to the following factors:

| | Year Ended December 31, | | | | | |
|---|---|---|---|---|---|---|
| | 2025 | | 2024 | | 2023 | |
| | (In thousands except for rates) | | | | | |
| U.S. federal statutory income tax rate | $ 37,803 | 21.00% | $ 58,850 | 21.00% | $ 19,011 | 21.00% |
| U.S. federal | | | | | | |
| Nontaxable and nondeductible items | | | | | | |
| (Earnings) attributable to non-controlling interest in Valencia | (3,767) | (2.09) | (3,368) | (1.20) | (3,892) | (4.30) |
| Allowance for equity funds used during construction | (3,906) | (2.17) | (3,756) | (1.34) | (3,145) | (3.48) |
| Non-deductible compensation | 1,999 | 1.11 | 1,450 | 0.52 | 1,659 | 1.83 |
| Non-deductible merger related costs | — | — | — | — | (1,959) | (2.16) |
| Other | 545 | 0.30 | 714 | 0.26 | 17 | 0.02 |
| Tax Credits | | | | | | |
| Research credits | (1,273) | (0.71) | (533) | (0.19) | (2,074) | (2.29) |
| Amortization of investment tax credits | (169) | (0.09) | (170) | (0.06) | (1,181) | (1.31) |
| Sale of NMRD | — | — | (15,713) | (5.61) | — | — |
| Other | — | — | (109) | (0.04) | (536) | (0.59) |
| Changes in unrecognized tax benefits | 82 | 0.05 | (155) | (0.06) | 260 | 0.29 |
| Changes in valuation allowances | 1,356 | 0.75 | 890 | 0.32 | 1,183 | 1.31 |
| Other adjustments | | | | | | |
| Amortization of excess deferred income tax | (25,649) | (14.25) | (23,362) | (8.34) | (22,859) | (25.25) |
| Other | (50) | (0.03) | (50) | (0.02) | 17 | 0.02 |
| U.S. state income taxes (benefits), net of federal effect | 3,216 | 1.79 | 6,830 | 2.44 | (2,851) | (3.15) |
| Total income taxes (benefits) | $ 10,187 | 5.66% | $ 21,518 | 7.68% | $ (16,350) | (18.06)% |

Table of Contents

**TXNM ENERGY, INC. AND SUBSIDIARIES**
**PUBLIC SERVICE COMPANY OF NEW MEXICO AND SUBSIDIARIES**
**TEXAS-NEW MEXICO POWER COMPANY AND SUBSIDIARIES**

**NOTES TO CONSOLIDATED FINANCIAL STATEMENTS**
**December 31, 2025, 2024 and 2023**

The components of TXNM's income taxes paid were:

| | Year Ended December 31, | | |
|---|---|---|---|
| | 2025 | 2024 | 2023 |
| | (In thousands) | | |
| U.S. federal | $ — | $ — | $ — |
| U.S. state | | | |
| New Mexico | — | (1,707) | 350 |
| Texas | 2,350 | 709 | 1,155 |
| Total paid (refunded) | $ 2,350 | $ (998) | $ 1,505 |

The components of TXNM's net accumulated deferred income tax liability were:

| | December 31, | |
|---|---|---|
| | 2025 | 2024 |
| | (In thousands) | |
| Deferred tax assets: | | |
| Net operating loss | $ 70,959 | $ 31,592 |
| Regulatory liabilities related to income taxes | 74,169 | 82,702 |
| Federal tax credit carryforwards | 127,140 | 126,770 |
| Regulatory disallowances | 42,136 | 42,330 |
| Regulatory liability SJGS retirement credits | 20 | 40 |
| Other | 48,599 | 52,955 |
| Total deferred tax assets | 363,023 | 336,389 |
| Deferred tax liabilities: | | |
| Depreciation and plant related | (880,253) | (794,203) |
| Investment tax credit | (80,899) | (81,068) |
| Regulatory assets related to income taxes | (85,926) | (84,053) |
| Pension | (42,568) | (41,383) |
| Regulatory asset for shutdown of SJGS Units 2 and 3 | (19,265) | (20,860) |
| Regulatory asset SJGS energy transition property | (83,601) | (85,365) |
| Regulatory asset PVNGS investment | (19,939) | (21,044) |
| PVNGS trusts | (47,214) | (48,421) |
| Other | (64,588) | (59,384) |
| Total deferred tax liabilities | (1,324,253) | (1,235,781) |
| Net accumulated deferred income tax liabilities | $ (961,230) | $ (899,392) |

The following table reconciles the change in TXNM's net accumulated deferred income tax liability to the deferred income tax (benefit) included in the Consolidated Statement of Earnings:

| | Year Ended December 31, 2025 |
|---|---|
| | (In thousands) |
| Net change in deferred income tax liability per above table | $ 61,838 |
| Change in tax effects of income tax related regulatory assets and liabilities | (11,079) |
| Amortization of excess deferred income tax | (25,649) |
| Tax effect of mark-to-market adjustments | 389 |
| Tax effect of excess pension liability | (17,024) |
| Adjustment for uncertain income tax positions | 641 |
| Reclassification of unrecognized tax benefits | (641) |
| Other | — |
| Deferred income tax (benefit) | $ 8,475 |

Table of Contents

**TXNM ENERGY, INC. AND SUBSIDIARIES**
**PUBLIC SERVICE COMPANY OF NEW MEXICO AND SUBSIDIARIES**
**TEXAS-NEW MEXICO POWER COMPANY AND SUBSIDIARIES**

**NOTES TO CONSOLIDATED FINANCIAL STATEMENTS**
**December 31, 2025, 2024 and 2023**

**PNM**

PNM's income taxes (benefits) consist of the following components:

| | Year Ended December 31, | | |
|---|---|---|---|
| | 2025 | 2024 | 2023 |
| | (In thousands) | | |
| U.S. Income from continuing operations before income taxes (benefits) | $ 101,099 | $ 237,469 | $ 37,960 |
| Current tax expense (benefit) | | | |
| U.S. federal | $ (9,044) | $ (7,005) | $ 9,518 |
| U.S. state | (1,114) | (5,681) | (4,304) |
| Total current tax expense (benefit) | (10,158) | (12,686) | 5,214 |
| Deferred tax expense (benefit) | | | |
| U.S. federal | 841 | 28,183 | (22,951) |
| U.S. state | 5,044 | 13,890 | 1,150 |
| U.S. amortization of accumulated investment tax credits | (169) | (170) | (171) |
| Total deferred tax expense (benefit) | 5,716 | 41,903 | (21,972) |
| Total income taxes (benefits) | $ (4,442) | $ 29,217 | $ (16,758) |

PNM's provision for income taxes (benefits) differed from the federal income tax computed at the statutory rate for each of the years shown. The differences are attributable to the following factors:

| | Year Ended December 31, | | | | | |
|---|---|---|---|---|---|---|
| | 2025 | | 2024 | | 2023 | |
| | (In thousands except for rates) | | | | | |
| U.S. federal statutory income tax rate | $ 21,231 | 21.00% | $ 49,868 | 21.00% | $ 7,972 | 21.00% |
| U.S. federal | | | | | | |
| Nontaxable and nondeductible items | | | | | | |
| (Earnings) attributable to non-controlling interest in Valencia | (3,767) | (3.72) | (3,368) | (1.42) | (3,892) | (10.25) |
| Allowance for equity funds used during construction | (2,038) | (2.01) | (2,739) | (1.15) | (2,065) | (5.44) |
| Non-deductible compensation | 1,277 | 1.26 | 894 | 0.38 | 1,015 | 2.67 |
| Other | (83) | (0.08) | (38) | (0.02) | (870) | (2.29) |
| Tax Credits | | | | | | |
| Research credits | (1,170) | (1.16) | (475) | (0.20) | (1,985) | (5.23) |
| Other | (169) | (0.17) | (170) | (0.07) | (171) | (0.45) |
| Changes in unrecognized tax benefits | 53 | 0.05 | (163) | (0.07) | 240 | 0.63 |
| Changes in valuation allowances | 136 | 0.14 | (277) | (0.12) | (224) | (0.59) |
| Other adjustments | | | | | | |
| Amortization of excess deferred income tax | (22,966) | (22.72) | (20,750) | (8.74) | (14,252) | (37.54) |
| Other | (50) | (0.05) | (49) | (0.02) | (34) | (0.09) |
| U.S. state income taxes (benefits), net of federal effect | 3,104 | 3.07 | 6,484 | 2.73 | (2,492) | (6.57) |
| Total income taxes (benefits) | $ (4,442) | (4.39)% | $ 29,217 | 12.30% | $ (16,758) | (44.15)% |

The components of PNM's income taxes paid (refunded) were:

| | Year Ended December 31, | | |
|---|---|---|---|
| | 2025 | 2024 | 2023 |
| | (In thousands) | | |
| U.S. federal | $ (10,774) | $ (2,262) | $ (4,794) |
| U.S. state | | | |
| New Mexico | (2,562) | (1,796) | (544) |
| Texas | — | — | — |
| Total paid (refunded) | $ (13,336) | $ (4,058) | $ (5,338) |

Table of Contents

**TXNM ENERGY, INC. AND SUBSIDIARIES**
**PUBLIC SERVICE COMPANY OF NEW MEXICO AND SUBSIDIARIES**
**TEXAS-NEW MEXICO POWER COMPANY AND SUBSIDIARIES**

**NOTES TO CONSOLIDATED FINANCIAL STATEMENTS**
**December 31, 2025, 2024 and 2023**

The components of PNM's net accumulated deferred income tax liability were:

| | December 31, | |
|---|---|---|
| | 2025 | 2024 |
| | (In thousands) | |
| Deferred tax assets: | | |
| Net operating loss | $ 23,654 | $ — |
| Regulatory liabilities related to income taxes | 56,661 | 64,481 |
| Federal tax credit carryforwards | 97,915 | 93,481 |
| Regulatory disallowance | 42,136 | 42,330 |
| Regulatory liability SJGS retirement credits | 20 | 40 |
| Other | 24,368 | 35,650 |
| Total deferred tax assets | 244,754 | 235,982 |
| | | |
| Deferred tax liabilities: | | |
| Depreciation and plant related | (655,362) | (582,089) |
| Investment tax credit | (80,899) | (81,068) |
| Regulatory assets related to income taxes | (77,648) | (75,464) |
| Pension | (37,820) | (36,678) |
| Regulatory asset for shutdown of SJGS Units 2 and 3 | (19,265) | (20,860) |
| Regulatory asset SJGS energy transition property | (83,601) | (85,365) |
| Regulatory asset PVNGS investment | (19,939) | (21,044) |
| PVNGS Trusts | (47,214) | (48,421) |
| Other | (36,534) | (41,211) |
| Total deferred tax liabilities | (1,058,282) | (992,200) |
| Net accumulated deferred income tax liabilities | $ (813,528) | $ (756,218) |

The following table reconciles the change in PNM's net accumulated deferred income tax liability to the deferred income tax (benefit) included in the Consolidated Statement of Earnings:

| | Year Ended December 31, 2025 |
|---|---|
| | (In thousands) |
| Net change in deferred income tax liability per above table | $ 57,310 |
| Change in tax effects of income tax related regulatory assets and liabilities | (10,678) |
| Amortization of excess deferred income tax | (22,966) |
| Tax effect of mark-to-market adjustments | (2) |
| Tax effect of excess pension liability | (17,024) |
| Adjustment for uncertain income tax positions | 600 |
| Reclassification of unrecognized tax benefits | (1,524) |
| Deferred income tax (benefit) | $ 5,716 |

Table of Contents

**TXNM ENERGY, INC. AND SUBSIDIARIES**
**PUBLIC SERVICE COMPANY OF NEW MEXICO AND SUBSIDIARIES**
**TEXAS-NEW MEXICO POWER COMPANY AND SUBSIDIARIES**

**NOTES TO CONSOLIDATED FINANCIAL STATEMENTS**
**December 31, 2025, 2024 and 2023**

**TNMP**

TNMP's income taxes consist of the following components:

| | Year Ended December 31, | | |
|---|---|---|---|
| | 2025 | 2024 | 2023 |
| | (In thousands) | | |
| U.S. Income from continuing operations before income taxes | $ 156,375 | $ 130,642 | $ 112,234 |
| Current tax expense (benefit) | | | |
| U.S. federal | $ 10,188 | $ (2,549) | $ 11,354 |
| U.S. state | 3,713 | 3,300 | 3,055 |
| Total current tax expense | 13,901 | 751 | 14,409 |
| Deferred tax expense (benefit) | | | |
| U.S. federal | 18,184 | 26,363 | 2,917 |
| U.S. state | — | — | (29) |
| Total deferred tax expense | 18,184 | 26,363 | 2,888 |
| Total income taxes | $ 32,085 | $ 27,114 | $ 17,297 |

TNMP's provision for income taxes differed from the federal income tax computed at the statutory rate for each of the periods shown. The differences are attributable to the following factors:

| | Year Ended December 31, | | | | | |
|---|---|---|---|---|---|---|
| | 2025 | | 2024 | | 2023 | |
| | (In thousands except for rates) | | | | | |
| U.S. federal statutory income tax rate | $ 32,839 | 21.00% | $ 27,435 | 21.00% | $ 23,569 | 21.00% |
| U.S. federal | | | | | | |
| Nontaxable and nondeductible items | (880) | (0.56) | (86) | (0.07) | (149) | (0.13) |
| Tax Credits | | | | | | |
| Research credits | (103) | (0.07) | (58) | (0.04) | (90) | (0.08) |
| Changes in unrecognized tax benefits | 28 | 0.02 | 9 | 0.01 | 20 | 0.02 |
| Changes in valuation allowances | (50) | (0.03) | (180) | (0.14) | 140 | 0.12 |
| Other adjustments | | | | | | |
| Amortization of excess deferred income tax | (2,682) | (1.72) | (2,612) | (2.00) | (8,607) | (7.67) |
| U.S. state income taxes (benefits), net of federal effect | 2,933 | 1.88 | 2,606 | 1.99 | 2,414 | 2.15 |
| Total income taxes | $ 32,085 | 20.52% | $ 27,114 | 20.75% | $ 17,297 | 15.41% |

The components of TNMP's income taxes paid were:

| | Year Ended December 31, | | |
|---|---|---|---|
| | 2025 | 2024 | 2023 |
| | (In thousands) | | |
| U.S. federal | $ 2,579 | $ 8,412 | $ 13,990 |
| U.S. state | | | |
| New Mexico | — | — | — |
| Texas | 4,940 | 2,609 | 2,914 |
| Total paid (refunded) | $ 7,519 | $ 11,021 | $ 16,904 |

Table of Contents

**TXNM ENERGY, INC. AND SUBSIDIARIES**
**PUBLIC SERVICE COMPANY OF NEW MEXICO AND SUBSIDIARIES**
**TEXAS-NEW MEXICO POWER COMPANY AND SUBSIDIARIES**

**NOTES TO CONSOLIDATED FINANCIAL STATEMENTS**
**December 31, 2025, 2024 and 2023**

The components of TNMP's net accumulated deferred income tax liability were:

| | December 31, | |
|---|---|---|
| | 2025 | 2024 |
| | (In thousands) | |
| Deferred tax assets: | | |
| Regulatory liabilities related to income taxes | $ 17,508 | $ 18,221 |
| Other | 5,099 | 4,522 |
| Total deferred tax assets | 22,607 | 22,743 |
| Deferred tax liabilities: | | |
| Depreciation and plant related | (212,168) | (200,709) |
| Regulatory assets related to income taxes | (8,278) | (8,589) |
| Loss on reacquired debt | (4,709) | (4,981) |
| Pension | (4,749) | (4,706) |
| AMS | (2,816) | (2,709) |
| Other | (19,262) | (9,156) |
| Total deferred tax liabilities | (251,982) | (230,850) |
| Net accumulated deferred income tax liabilities | $ (229,375) | $ (208,107) |

The following table reconciles the change in TNMP's net accumulated deferred income tax liability to the deferred income tax included in the Consolidated Statement of Earnings:

| | Year Ended December 31, 2025 |
|---|---|
| | (In thousands) |
| Net change in deferred income tax liability per above table | $ 21,268 |
| Change in tax effects of income tax related regulatory assets and liabilities | (401) |
| Amortization of excess deferred income tax | (2,682) |
| Other | (1) |
| Deferred income tax | $ 18,184 |

**Other Disclosures**

The Company is required to recognize only the impact of tax positions that, based on their technical merits, are more likely than not to be sustained upon an audit by the taxing authority. A reconciliation of unrecognized tax benefits is as follows:

| | TXNM | PNM | TNMP |
|---|---|---|---|
| | | (In thousands) | |
| Balance at December 31, 2022 | $ 15,154 | $ 12,201 | $ 151 |
| Additions (reductions) based on tax positions related to 2023 | (277) | (294) | 17 |
| Additions for tax positions of prior years | 259 | 239 | 20 |
| Balance at December 31, 2023 | 15,136 | 12,146 | 188 |
| Additions based on tax positions related to 2024 | 19 | 2 | 17 |
| Additions (reductions) for tax positions of prior years | (154) | (163) | 9 |
| Balance at December 31, 2024 | 15,001 | 11,985 | 214 |
| Additions based on tax positions related to 2025 | 559 | 547 | 12 |
| Additions for tax positions of prior years | 82 | 53 | 28 |
| Balance at December 31, 2025 | $ 15,642 | $ 12,585 | $ 254 |

Included in the balance of unrecognized tax benefits at December 31, 2025 are $15.6 million, $12.5 million, and $0.3 million that, if recognized, would affect the effective tax rate for TXNM, PNM, and TNMP. The Company does not anticipate that any unrecognized tax expenses or unrecognized tax benefits will be reduced or settled in 2026.

Table of Contents

**TXNM ENERGY, INC. AND SUBSIDIARIES**
**PUBLIC SERVICE COMPANY OF NEW MEXICO AND SUBSIDIARIES**
**TEXAS-NEW MEXICO POWER COMPANY AND SUBSIDIARIES**

**NOTES TO CONSOLIDATED FINANCIAL STATEMENTS**
**December 31, 2025, 2024 and 2023**

TXNM, PNM, and TNMP had no estimated interest income or expense related to income taxes for the years ended December 31, 2025, 2024, and 2023. There was no accumulated accrued interest receivable or payable related to income taxes as of December 31, 2025 and 2024.

The Company files a federal consolidated and several consolidated and separate state income tax returns. The tax years prior to 2022 are closed to examination by either federal or state taxing authorities other than Arizona. The tax years prior to 2021 are closed to examination by Arizona taxing authorities. Other tax years are open to examination by federal and state taxing authorities and net operating loss carryforwards are open to examination for the years in which the carryforwards are utilized. At December 31, 2025, the Company has $330.7 million of federal net operating loss carryforwards that expire beginning in 2036 and $130.0 million of federal tax credit carryforwards that expire beginning in 2026. State net operating losses expire beginning in 2038 and vary from federal due to differences between state and federal tax law.

In 2008, fifty percent bonus tax depreciation was enacted as a temporary two-year stimulus measure as part of the Economic Stimulus Act of 2008. Bonus tax depreciation in various forms has been extended since that time, including by the Protecting Americans from Tax Hikes Act of 2015. The 2015 act extended and phased-out bonus tax depreciation through 2019. As discussed above, the Tax Act eliminated bonus depreciation for utilities effective September 28, 2017. However, in 2020 the IRS issued regulations interpreting Tax Act amendments to depreciation provisions of the IRC which allowed the Company to claim a bonus depreciation deduction on certain construction projects placed in service after the third quarter of 2017. As a result of the net operating loss carryforwards for income tax purposes created by bonus depreciation, certain tax carryforwards were not expected to be utilized before their expiration. In addition, as a result of Tax Act changes to the deductibility of officer compensation, certain deferred tax benefits related to compensation are not expected to be realized. The Company has impaired the deferred tax assets for tax carryforwards which are not expected to be utilized and for compensation that is not expected to be deductible.

The Company earns investment tax credits for construction or purchase of eligible property. The Company uses the deferral method of accounting for these investment tax credits. Impairments of tax attributes after reflecting the expiration of carryforwards under applicable tax laws for 2023 through 2025 are as follows:

| | TXNM | PNM | TNMP |
|---|---|---|---|
| | | (In thousands) | |
| **December 31, 2025:** | | | |
| Federal tax credit carryforwards | $ 625 | $ 194 | $ — |
| Compensation expense | $ (120) | $ (70) | $ (50) |
| **December 31, 2024:** | | | |
| Federal tax credit carryforwards | $ 131 | $ — | $ — |
| Compensation expense | $ (516) | $ (335) | $ (179) |
| **December 31, 2023:** | | | |
| Federal tax credit carryforwards | $ 839 | $ (427) | $ — |
| Compensation expense | $ 387 | $ 246 | $ 140 |

The tax effect of compensation that is not expected to be deductible and impairments of unexpired tax credits are reflected as a valuation allowance against deferred tax assets. The reserve balances, after reflecting expiration of carryforwards under applicable tax laws, at December 31, 2025 and 2024 are as follows:

| | TXNM | PNM | TNMP |
|---|---|---|---|
| | | (In thousands) | |
| **December 31, 2025:** | | | |
| Federal tax credit carryforwards | $ 2,811 | $ 194 | $ — |
| Compensation expense | $ 476 | $ 324 | $ 152 |
| **December 31, 2024:** | | | |
| Federal tax credit carryforwards | $ 2,186 | $ — | $ — |
| Compensation expense | $ 596 | $ 394 | $ 202 |

**(19) Goodwill**

The excess purchase price over the fair value of the assets acquired and the liabilities assumed by TXNM for its 2005 acquisition of TNP was recorded as goodwill and was pushed down to the businesses acquired. In 2007, the TNMP assets that were included in its New Mexico operations, including goodwill, were transferred to PNM. TXNM's reporting units that

Table of Contents



currently have goodwill are PNM and TNMP. The Company evaluates its goodwill for impairment annually at the reporting unit level or more frequently if circumstances indicate that the goodwill may be impaired. Application of the impairment test requires judgment, including the identification of reporting units, assignment of assets and liabilities to reporting units, and determination of the fair value of each reporting unit.

In certain circumstances an entity may perform a qualitative analysis to conclude that the goodwill of a reporting unit is not impaired. Under a qualitative assessment an entity considers macroeconomic conditions, industry and market considerations, cost factors, overall financial performance, other relevant entity-specific events affecting a reporting unit, as well as whether a sustained decrease (both absolute and relative to its peers) in share price has occurred. An entity considers the extent to which each of the adverse events and circumstances identified could affect the comparison of a reporting unit's fair value with its carrying amount. An entity places more weight on the events and circumstances that most affect a reporting unit's fair value or the carrying amount of its net assets. An entity also considers positive and mitigating events and circumstances that may affect its determination of whether it is more likely than not that the fair value of a reporting unit is less than its carrying amount. An entity evaluates, on the basis of the weight of evidence, the significance of all identified events and circumstances in the context of determining whether it is more likely than not that the fair value of a reporting unit is less than its carrying amount. A quantitative analysis is not required if, after assessing events and circumstances, an entity determines that it is not more likely than not that the fair value of a reporting unit is less than its carrying amount.

In other circumstances, an entity may perform a quantitative analysis to reach the conclusion regarding impairment with respect to a reporting unit. An entity may choose to perform a quantitative analysis without performing a qualitative analysis and may perform a qualitative analysis for certain reporting units, but a quantitative analysis for others. The first step of the quantitative impairment test requires an entity to compare the fair value of the reporting unit with its carrying value, including goodwill. If as a result of this analysis, the entity concludes there is an indication of impairment in a reporting unit having goodwill, the entity is required to perform the second step of the impairment analysis, determining the amount of goodwill impairment to be recorded. The amount is calculated by comparing the implied fair value of the goodwill to its carrying amount. This exercise would require the entity to allocate the fair value determined in step one to the individual assets and liabilities of the reporting unit. Any remaining fair value would be the implied fair value of goodwill on the testing date. To the extent the recorded amount of goodwill of a reporting unit exceeds the implied fair value determined in step two, an impairment loss would be reflected in results of operations.

TXNM periodically updates its quantitative analysis for both PNM and TNMP. The use of a quantitative approach in a given period is not necessarily an indication that a potential impairment has been identified under a qualitative approach. When TXNM performs a quantitative analysis for PNM or TNMP, a discounted cash flow methodology is primarily used to estimate the fair value of the reporting unit. This analysis requires significant judgments, including estimations of future cash flows, which is dependent on internal forecasts, estimations of long-term growth rates for the business, and determination of appropriate weighted average cost of capital for the reporting unit. Changes in these estimates and assumptions could materially affect the determination of fair value and the conclusion of impairment.

When TXNM performs a qualitative or quantitative analysis for PNM or TNMP, TXNM considers market and macroeconomic factors including changes in growth rates, changes in the WACC, and changes in discount rates. TXNM also evaluates its stock price relative to historical performance, industry peers, and to major market indices, including an evaluation of TXNM's market capitalization relative to the carrying value of its reporting units.

For its annual evaluations performed as of April 1, 2023, TXNM performed a qualitative analysis for both the PNM and TNMP reporting units. In addition to the typical considerations discussed above, the qualitative analysis considered changes in the Company's expectations of future financial performance since the April 1, 2018 quantitative analysis and the previous qualitative analyses through April 1, 2022 performed for PNM, as well as the April 1, 2021 quantitative analysis and the previous qualitative analyses performed for TNMP. This analysis considered Company specific events such as the Merger, potential impacts of legal and regulatory matters discussed in Notes 16 and 17, including potential outcomes in PNM's 2024 Rate Change, PNM's San Juan Abandonment Application, PNM's Four Corners Abandonment Application, PNM's PVNGS Leased Interest Abandonment Application and other potential impacts of changes in PNM's resource needs based on PNM's 2020 IRP. Based on an evaluation of these and other factors, the Company determined it was not more likely than not that the April 1, 2023 carrying values of PNM and TNMP exceeded their fair value.

For its annual evaluations performed as of April 1, 2024, TXNM performed a quantitative analysis for the PNM reporting unit and a qualitative analysis for the TNMP reporting unit. The quantitative analysis, discussed above, indicated that the fair value of the PNM reporting unit, which has goodwill of $51.6 million, exceeded its carrying value by approximately 54%. The qualitative analysis, in addition to the typical considerations discussed above, considered changes in the Company's expectations of future financial performance since the April 1, 2020 quantitative analysis and the previous qualitative analyses through April 1, 2023, performed for TNMP. This analysis considered events specific to TNMP such as the potential impacts of legal and regulatory matters discussed in Note 16 and Note 17. Based on an evaluation of these and other factors, the

Table of Contents

**TXNM ENERGY, INC. AND SUBSIDIARIES**
**PUBLIC SERVICE COMPANY OF NEW MEXICO AND SUBSIDIARIES**
**TEXAS-NEW MEXICO POWER COMPANY AND SUBSIDIARIES**

**NOTES TO CONSOLIDATED FINANCIAL STATEMENTS**
**December 31, 2025, 2024 and 2023**

Company determined it was not more likely than not that the April 1, 2024 carrying values of PNM and TNMP exceeded their fair value. Since the April 1, 2024 annual evaluation, there have been no events or indications that the fair values of the reporting units with recorded goodwill have decreased below their carrying values.

For its annual evaluations performed as of April 1, 2025, TXNM performed a qualitative analysis for both the PNM and TNMP reporting units. In addition to the typical considerations discussed above, the qualitative analysis considered changes in the Company's expectations of future financial performance since the April 1, 2024, quantitative analysis performed for PNM, as well as the April 1, 2020 quantitative analysis and the previous qualitative analyses through April 1, 2024 performed for TNMP. This analysis considered Company-specific events such as the Merger, potential impacts of legal and regulatory matters discussed in Note 16 and Note 17, including the outcomes in the 2025 Rate Request, PNM's Grid Modernization Plan, and TNMP's System Resiliency Plan. Based on an evaluation of these and other factors, the Company determined it was not more likely than not that the April 1, 2025, carrying values of PNM and TNMP exceeded their fair value.

**(20) Related Party Transactions**

TXNM, PNM, TNMP, and NMRD are considered related parties, as is PNMR Services Company, a wholly-owned subsidiary of TXNM that provides corporate services to TXNM and its subsidiaries in accordance with shared services agreements. These services are billed at cost on a monthly basis to the business units. In addition, prior to the sale of NMRD, PNM purchased renewable energy from certain NMRD-owned facilities at a fixed price per MWh of energy produced. On February 27, 2024, PNMR Development and AEP OnSite Partners sold their respective interests in NMRD, and the table below reflects transactions with NMRD prior to the sale.

TXNM files a consolidated federal income tax return with its affiliated companies. A tax allocation agreement exists between TXNM and each of its affiliated companies. These agreements provide that the subsidiary company will compute its taxable income on a stand-alone basis. If the result is a net tax liability, such amount shall be paid to TXNM. If there are net operating losses and/or tax credits, the subsidiary shall receive payment for the tax savings from TXNM to the extent that TXNM is able to utilize those benefits. See Note 7 for information on intercompany borrowing arrangements. The table below summarizes the nature and amount of related party transactions of TXNM, PNM and TNMP:

| | Year Ended December 31, | | |
|---|---|---|---|
| | 2025 | 2024 | 2023 |
| | | (In thousands) | |
| Services billings: | | | |
| TXNM to PNM | $ 133,409 | $ 132,209 | $ 124,321 |
| TXNM to TNMP | 53,852 | 53,166 | 47,470 |
| PNM to TNMP | 311 | 440 | 349 |
| TNMP to TXNM | 99 | 114 | 141 |
| TNMP to PNM | — | 497 | — |
| TXNM to NMRD | — | 66 | 333 |
| Renewable energy purchases: | | | |
| PNM from NMRD | — | 1,523 | 12,717 |
| Interest billings: | | | |
| TXNM to PNM | 250 | 142 | 23 |
| PNM to TXNM | 527 | 612 | 582 |
| TXNM to TNMP | 215 | 210 | 129 |
| Income tax sharing payments: | | | |
| TXNM to PNM | 13,336 | 2,351 | 5,338 |
| PNM to TXNM | — | — | — |
| TNMP to TXNM | 5,169 | 10,312 | 15,749 |

**(21) Equity Method Investment**

In September 2017, PNMR Development and AEP OnSite Partners created NMRD to pursue the acquisition, development, and ownership of renewable energy generation projects, primarily in the state of New Mexico. PNMR Development and AEP OnSite Partners each had a 50% ownership interest in NMRD. TXNM accounted for its investment in NMRD using the equity method of accounting because TXNM's ownership interest results in significant influence, but not

Table of Contents



control over NMRD and its operations. During 2024 and 2023 PNMR Development and AEP OnSite Partners each made cash contributions of $12.6 million and $26.3 million to NMRD.

On December 22, 2023, PNMR Development and AEP Onsite reached agreement with Exus New Mexico, LLC, a subsidiary of Exus North America Holdings, LLC, for the sale of NMRD and its subsidiaries, pursuant to a Membership Interest Purchase Agreement, dated December 22, 2023 ("MIPA"). Closing occurred on February 27, 2024, with PNMR Development receiving net proceeds of $117.0 million and recognized an after-tax gain of $4.4 million, which includes the recognition of deferred investment tax credits of $15.7 million.

TXNM presented its share of net earnings from NMRD in other income on the Consolidated Statements of Earnings until the closing of the sale discussed above. Summarized financial information for NMRD is as follows:

| | December 31, | | |
|---|---|---|---|
| | 2025 | 2024 | 2023 |
| | | (In thousands) | |
| Operating revenues | $ — | $ 3,204 | $ 13,629 |
| Operating expenses | — | 3,378 | 8,228 |
| Net earnings | $ — | $ (174) | $ 5,401 |

**(22) Merger**

On May 18, 2025, TXNM, Parent, and Merger Sub, entered into the Merger Agreement, pursuant to which Merger Sub will merge with and into TXNM, with TXNM surviving the Merger as a direct wholly-owned subsidiary of Parent. Parent and Merger Sub are affiliates of Blackstone Infrastructure.

Pursuant to the Merger Agreement, each issued and outstanding share of the common stock of TXNM (other than (i) the issued shares of TXNM common stock that are owned by TXNM, Parent, Merger Sub, or any other wholly-owned subsidiaries of Parent or TXNM, in each case, not held on behalf of third parties, which will be automatically cancelled at the Effective Time and (ii) shares of TXNM common stock outstanding immediately prior to the Effective Time and held by a holder who has not voted in favor of, or consented in writing to, the Merger who is entitled to, and who has demanded, payment for fair value of such shares in accordance with applicable New Mexico law) will, at the Effective Time, be converted into the right to receive $61.25 in cash, without interest.

The proposed Merger has been unanimously approved by the Board, and it was approved by a majority of the holders of outstanding shares of TXNM common stock, as of the applicable record date, at the special meeting held on August 28, 2025. On January 13, 2026, the waiting period under the HSR Act in connection with the Merger expired and on January 23, 2026, the FCC consented to the two transfers of control applications submitted by Parent and TXNM. Consummation of the Merger is subject to the satisfaction or waiver of certain customary conditions, including the absence of any material adverse effect on TXNM, the absence of legal prohibition on the consummation of the Merger (a "Legal Restraint"), and absence of any agreement between Parent or TXNM and the FCC or Antitrust Division of the U.S. Department of Justice prohibiting the Merger, and the receipt of certain required regulatory approvals (including NMPRC and NRC). The Merger Agreement does not contain any financing condition. On August 25, 2025, TXNM filed applications for regulatory approvals to the NMPRC, PUCT, and FERC (Note 17). On February 6, 2026, the PUCT approved a unanimous settlement agreement filed by parties to the merger proceeding filed in December and on February 20, 2026, the FERC approved the proposed Merger. The Merger is currently expected to close in the second half of 2026.

The Merger Agreement may be terminated by each of TXNM and Parent under certain circumstances, including if the Merger is not consummated by the 15-month anniversary of the execution of the Merger Agreement (as extended, the "End Date"), so long as failure of the Merger to consummate on or before the End Date was not due to the breach of the Merger Agreement by such party, subject to an automatic extension of the End Date until December 31, 2026 and an additional three-month extension by mutual agreement of the parties, in each case if all of the conditions to the closing, other than the conditions related to obtaining regulatory approvals or the absence of a Legal Restraint, have been satisfied or waived. The Merger Agreement also provides for other customary termination rights for both Parent and TXNM. The Merger Agreement further provides that, upon termination of the Merger Agreement under certain specified circumstances, TXNM will be required to pay Parent a termination fee of $210.0 million plus certain costs and expenses ("TXNM Termination Fee"). In addition, the Merger Agreement provides that (i) if the Merger Agreement is terminated by either party as a result of a Legal Restraint (solely in connection with required regulatory approvals), (ii) if the Merger Agreement is terminated by either party as a result of the Merger not being consummated by the End Date, (iii) the Merger Agreement is terminated by TXNM as a result of a breach of any representation or warranty or failure to perform by Parent or Merger Sub that is not curable or timely cured or (iv) Parent fails to effect the closing when all closing conditions (other than those that by their nature are to be satisfied at closing) have

Table of Contents



been satisfied or waived and it is otherwise obligated to do so under the Merger Agreement and it further fails to consummate the closing within two business days after receiving notice from TXNM, then, in any such case, upon termination of the Merger Agreement, Parent will be required to pay TXNM a termination fee of $350.0 million plus certain costs and expenses (the "Parent Termination Fee").

Parent and Merger Sub have obtained equity and debt financing commitments for the transactions contemplated by the Merger Agreement. Pursuant to an equity commitment letter dated May 18, 2025 (the "Equity Commitment Letter"), Blackstone Infrastructure committed to provide Parent, at the consummation of the Merger, with an equity contribution in the amount set forth therein. In addition, pursuant to debt commitment letters ("Debt Commitment Letters") delivered to Merger Sub, Royal Bank of Canada, MUFG Bank, Ltd., BNP Paribas, Sumitomo Mitsui Banking Corporation and Canadian Imperial Bank of Commerce, New York Branch have agreed to provide debt financing to Merger Sub following the Closing on the terms and subject to the conditions set forth therein. The equity financing, when funded in accordance with the Equity Commitment Letter together with the debt financing when funded in accordance with the Debt Commitment Letters, will provide an amount that is sufficient to fund the (i) payment of the aggregate per share merger consideration, (ii) repayment, prepayment or discharge of certain obligations of the Company and its subsidiaries that would become due (after giving effect to the Merger) and are intended to be repaid at Closing and (iii) payment of all fees and expenses expected to be incurred at Closing in connection therewith. Additionally, following Closing, Parent and TXNM will have sufficient funds to repay, prepay or discharge certain other debt obligations of TXNM. In addition, Blackstone Infrastructure has executed and delivered a limited guarantee in favor of TXNM (the "Limited Guarantee"), pursuant to which Blackstone Infrastructure has guaranteed the obligations of Parent and Merger Sub to pay the Parent Termination Fee and certain other fees and expenses under the Merger Agreement. The Limited Guarantee is capped at $375.0 million.

Upon consummation of the Merger, the outstanding shares of TXNM common stock will be delisted from the New York Stock Exchange and deregistered under the Exchange Act.

Table of Contents

**SCHEDULE I**
**TXNM ENERGY, INC.**
**CONDENSED FINANCIAL INFORMATION OF PARENT COMPANY**
**STATEMENTS OF EARNINGS**

| | Year ended December 31, | | |
|---|---|---|---|
| | **2025** | **2024** | **2023** |
| | | (In thousands) | |
| **Operating Revenues** | $ — | $ — | $ — |
| **Operating Expenses** | 21,079 | 9,406 | 4,972 |
| Operating (loss) | (21,079) | (9,406) | (4,972) |
| **Other Income and Deductions:** | | | |
| Equity in earnings of subsidiaries | 211,603 | 299,867 | 133,628 |
| Other income | 784 | 1,427 | 2,245 |
| Net other income and (deductions) | 212,387 | 301,294 | 135,873 |
| **Interest Charges** | 57,462 | 64,916 | 58,934 |
| **Earnings Before Income Taxes** | 133,846 | 226,972 | 71,967 |
| **Income Tax (Benefit)** | (17,516) | (15,182) | (15,851) |
| **Net Earnings** | $ 151,362 | $ 242,154 | $ 87,818 |

Table of Contents

**SCHEDULE I**
**TXNM ENERGY, INC.**
**CONDENSED FINANCIAL INFORMATION OF PARENT COMPANY**
**STATEMENTS OF CASH FLOWS**

| | Year Ended December 31, | | |
|---|---|---|---|
| | **2025** | **2024** | **2023** |
| | | (In thousands) | |
| **Cash Flows From Operating Activities:** | | | |
| Net Cash Flows From Operating Activities | $ (62,739) | $ (36,927) | $ (31,368) |
| **Cash Flows From Investing Activities:** | | | |
| Additions to non-utility plant | (1,568) | 839 | 1,138 |
| Investments in subsidiaries | (373,300) | (112,000) | (85,500) |
| Cash dividends from subsidiaries | — | 153,000 | — |
| Net cash flows from investing activities | (374,868) | 41,839 | (84,362) |
| **Cash Flows From Financing Activities:** | | | |
| Short-term borrowings (repayments) -affiliate, net | (21,200) | 21,100 | (5,300) |
| Revolving credit facility borrowings | 927,300 | 822,000 | 837,000 |
| Revolving credit facility repayments | (1,018,600) | (797,400) | (777,100) |
| Long-term borrowings | 350,000 | 550,000 | 500,000 |
| Repayment of long-term debt | (461,000) | (539,000) | (500,000) |
| Issuance of common stock | 842,739 | 98,601 | 198,177 |
| Awards of common stock | (11,972) | (8,460) | (9,646) |
| Dividends paid | (162,845) | (139,811) | (126,177) |
| Other, net | (5,258) | (11,945) | (1,221) |
| Net cash flows from financing activities | 439,164 | (4,915) | 115,733 |
| **Change in Cash and Cash Equivalents** | 1,557 | (3) | 3 |
| **Cash and Cash Equivalents at Beginning of Period** | 61 | 64 | 61 |
| **Cash and Cash Equivalents at End of Period** | $ 1,618 | $ 61 | $ 64 |
| **Supplemental Cash Flow Disclosures:** | | | |
| Interest paid, net of amounts capitalized | $ 53,508 | $ 71,917 | $ 47,122 |
| Income taxes paid (refunded), net | $ — | $ (1,707) | $ 350 |

Table of Contents

**SCHEDULE I**

**TXNM ENERGY, INC.**
**CONDENSED FINANCIAL INFORMATION OF PARENT COMPANY**
**BALANCE SHEETS**

| | December 31, | |
|---|---|---|
| | **2025** | **2024** |
| | (In thousands) | |
| **Assets** | | |
| Cash and cash equivalents | $ 1,618 | $ 61 |
| Intercompany receivables | 6,081 | — |
| Income taxes receivable | 4,738 | 15,326 |
| Other current assets | 130 | 15 |
| Total current assets | 12,567 | 15,402 |
| Property, plant and equipment, net of accumulated depreciation of $19,570 and $19,650 | 21,104 | 19,536 |
| Investment in subsidiaries | 4,260,519 | 3,625,611 |
| Other long-term assets | 63,813 | 48,312 |
| Total long-term assets | 4,345,436 | 3,693,459 |
| | $ 4,358,003 | $ 3,708,861 |
| **Liabilities and Stockholders' Equity** | | |
| Short-term debt | 2,600 | 93,900 |
| Short-term debt-affiliate | 9,119 | 30,319 |
| Current installments of long-term debt | — | 50,967 |
| Intercompany payables | — | 1,999 |
| Accrued interest and taxes | 8,257 | 6,428 |
| Dividends declared | 46,019 | 36,757 |
| Other current liabilities | 788 | 571 |
| Total current liabilities | 66,783 | 220,941 |
| Long-term debt, net of Unamortized Premiums, Discounts, and Debt Issuance Costs | 884,399 | 948,731 |
| Other long-term liabilities | 2,803 | 2,803 |
| Total liabilities | 953,985 | 1,172,475 |
| Common stock (no par value; 200,000,000 shares authorized; issued and outstanding 108,921,356 and 92,659,335 shares) | 2,563,930 | 1,724,444 |
| Accumulated other comprehensive income (loss), net of income taxes | (26,816) | (75,708) |
| Retained earnings | 866,904 | 887,650 |
| Total common stockholders' equity | 3,404,018 | 2,536,386 |
| | $ 4,358,003 | $ 3,708,861 |

See Notes 7, 8, 11, and 16 for information regarding commitments, contingencies, and maturities of long-term debt.

Table of Contents

**SCHEDULE II**
**TXNM ENERGY, INC. AND SUBSIDIARIES**
**VALUATION AND QUALIFYING ACCOUNTS**

| Description | Balance at beginning of year | Additions | | Deductions | Balance at end of year |
|---|---|---|---|---|---|
| | | Charged to costs and expenses | Charged to other accounts | Write-offs and other | |
| | | | (In thousands) | | |
| Allowance for credit losses, year ended December 31: | | | | | |
| 2023 | $ 4,925 | $ 3,585 | $ — | $ 5,122 | $ 3,388 |
| 2024 | $ 3,388 | $ 4,184 | $ — | $ 6,174 | $ 1,398 |
| 2025 | $ 1,398 | $ 4,551 | $ — | $ 4,555 | $ 1,394 |

Table of Contents

**SCHEDULE II**
**PUBLIC SERVICE COMPANY OF NEW MEXICO AND SUBSIDIARIES**
**A WHOLLY-OWNED SUBSIDIARY OF TXNM ENERGY, INC.**
**VALUATION AND QUALIFYING ACCOUNTS**

| Description | Balance at beginning of year | Additions | | Deductions | Balance at end of year |
|---|---|---|---|---|---|
| | | Charged to costs and expenses | Charged to other accounts | Write-offs and other | |
| | | | (In thousands) | | |
| Allowance for credit losses, year ended December 31: | | | | | |
| 2023 | $ 4,925 | $ 3,549 | $ — | $ 5,086 | $ 3,388 |
| 2024 | $ 3,388 | $ 4,184 | $ — | $ 6,174 | $ 1,398 |
| 2025 | $ 1,398 | $ 4,551 | $ — | $ 4,555 | $ 1,394 |

Table of Contents

**SCHEDULE II**
**TEXAS-NEW MEXICO POWER COMPANY AND SUBSIDIARIES**
**A WHOLLY-OWNED SUBSIDIARY OF TXNM ENERGY, INC.**
**VALUATION AND QUALIFYING ACCOUNTS**

| Description | Balance at beginning of year | Additions | | Deductions | Balance at end of year |
|---|---|---|---|---|---|
| | | Charged to costs and expenses | Charged to other accounts | Write-offs and other | |
| | | | (In thousands) | | |
| Allowance for credit losses, year ended December 31: | | | | | |
| 2023 | $ — | $ 36 | $ — | $ 36 | $ — |
| 2024 | $ — | $ — | $ — | $ — | $ — |
| 2025 | $ — | $ — | $ — | $ — | $ — |

Table of Contents

**ITEM 9. CHANGES IN AND DISAGREEMENTS WITH ACCOUNTANTS ON ACCOUNTING AND FINANCIAL DISCLOSURE**

None.

**ITEM 9A. CONTROLS AND PROCEDURES**

**TXNM**

(a) Evaluation of disclosure controls and procedures.

As of the end of the period covered by this annual report, TXNM conducted an evaluation under the supervision and with the participation of its management, including the Chief Executive Officer and the Chief Financial Officer, of the effectiveness of the design and operation of the disclosure controls and procedures (as defined in Rules 13a-15(e) and 15d-15(e) under the Securities Exchange Act of 1934). Based upon this evaluation, the Chief Executive Officer and the Chief Financial Officer concluded that the disclosure controls and procedures are effective as of the end of the period covered by this report.

(b) Management's report on internal control over financial reporting.

"Management's Annual Report on Internal Control Over Financial Reporting" appears on page B-2. This report is incorporated by reference herein. TXNM's internal control over financial reporting as of December 31, 2025, has been audited by KPMG LLP, as an independent registered public accounting firm, as stated in their report which is included herein.

(c) Changes in internal controls.

There have been no changes in TXNM's internal control over financial reporting (as such term is defined in Rules 13a-15(f) and 15d-15(f) under the Securities Exchange Act of 1934) during the quarter ended December 31, 2025, that have materially affected, or are reasonably likely to materially affect, TXNM's internal control over financial reporting.

**PNM**

(a) Evaluation of disclosure controls and procedures.

As of the end of the period covered by this annual report, PNM conducted an evaluation under the supervision and with the participation of its management, including the Chief Executive Officer and the Chief Financial Officer, of the effectiveness of the design and operation of the disclosure controls and procedures (as defined in Rules 13a-15(e) and 15d-15(e) under the Securities Exchange Act of 1934). Based upon this evaluation, the Chief Executive Officer and the Chief Financial Officer concluded that the disclosure controls and procedures are effective as of the end of the period covered by this report.

(b) Management's report on internal control over financial reporting.

"Management's Annual Report on Internal Control Over Financial Reporting" appears on page B-3. This report is incorporated by reference herein.

(c) Changes in internal controls.

There have been no changes in PNM's internal control over financial reporting (as such term is defined in Rules 13a-15(f) and 15d-15(f) under the Securities Exchange Act of 1934) during the quarter ended December 31, 2025 that have materially affected, or are reasonably likely to materially affect, PNM's internal control over financial reporting.

**TNMP**

(a) Evaluation of disclosure controls and procedures.

As of the end of the period covered by this annual report, TNMP conducted an evaluation under the supervision and with the participation of its management, including the Chief Executive Officer and the Chief Financial Officer, of the effectiveness of the design and operation of the disclosure controls and procedures (as defined in Rules 13a-15(e) and 15d-15(e) under the Securities Exchange Act of 1934). Based upon this evaluation, the Chief Executive Officer and the Chief Financial Officer concluded that the disclosure controls and procedures are effective as of the end of the period covered by this report.

(b) Management's report on internal control over financial reporting.

"Management's Annual Report on Internal Control Over Financial Reporting" appears on page B-4. This report is incorporated by reference herein.

Table of Contents

(c) Changes in internal controls.

There have been no changes in TNMP's internal control over financial reporting (as such term is defined in Rules 13a-15(f) and 15d-15(f) under the Securities Exchange Act of 1934) during the quarter ended December 31, 2025 that have materially affected, or are reasonably likely to materially affect, TNMP's internal control over financial reporting.

**ITEM 9B. OTHER INFORMATION**

None.

**ITEM 9C. DISCLOSURE REGARDING FOREIGN JURISDICTIONS THAT PREVENT INSPECTIONS**

Not applicable.

**PART III**

**ITEM 10. DIRECTORS, EXECUTIVE OFFICERS, AND CORPORATE GOVERNANCE**

Reference is hereby made to "Proposal 1: Elect as Directors the Director Nominees Named in the Proxy Statement" in TXNM's Proxy Statement relating to the annual meeting of shareholders to be held on June 10, 2026 (the "2026 Proxy Statement"), a copy of which will be filed with the SEC no later than 120 days after December 31, 2025, to PART I, SUPPLEMENTAL ITEM – "INFORMATION ABOUT EXECUTIVE OFFICERS OF TXNM ENERGY, INC." in this Form 10-K, "Information About Our Corporate Governance – Code of Ethics," and "Additional Information About Our Board and Board Committees – Board Committees and their Functions" – "Nominating and Governance Committee" in the 2026 Proxy Statement. The Company intends to satisfy the disclosure requirements of Form 8-K relating to amendments to the Company's code of ethics applicable to its senior executive and financial officers by posting such information on its website. Information about the Company's website is included under PART I, ITEM 1 – "WEBSITES" in this Form 10-K.

We have adopted an Insider Trading Policy governing the purchase, sale and other dispositions of our securities by directors, officers and employees that is reasonably designed to promote compliance with insider trading laws, rules and regulations and any applicable listing standards, In addition, with regard to the Company's trading in its own securities it is the Company's policy to comply with the federal securities laws and the applicable exchange listing requirements. A copy of our Insider Trading Policy was filed with the 2024 Annual Report on Form 10-K as Exhibit 19.1.

**ITEM 11. EXECUTIVE COMPENSATION**

Reference is hereby made to "Director Compensation" and "Executive Compensation", and all subheadings thereunder from "Compensation Discussion and Analysis" to "Pay Versus Performance" in the 2026 Proxy Statement.

**ITEM 12. SECURITY OWNERSHIP OF CERTAIN BENEFICIAL OWNERS AND MANAGEMENT AND RELATED STOCKHOLDER MATTERS**

Reference is hereby made to "Ownership of Our Common Stock – Largest Shareholders" and "– Stock Ownership of Directors and Executive Officers" and "Equity Compensation Plan Information" in the 2026 Proxy Statement.

**ITEM 13. CERTAIN RELATIONSHIPS AND RELATED TRANSACTIONS AND DIRECTOR INDEPENDENCE**

Reference is hereby made to "Information About Our Corporate Governance – Director Independence" and "– Related Person Transaction Policy" in the 2026 Proxy Statement.

**ITEM 14. PRINCIPAL ACCOUNTING FEES AND SERVICES**

Reference is hereby made to "Audit and Ethics Committee Report" and "Independent Auditor Fees" in the 2026 Proxy Statement. Independent auditor fees for PNM and TNMP are reported in the 2026 Proxy Statement for TXNM. All such fees are fees of TXNM. TXNM charges a management fee to PNM and TNMP that includes an allocation of independent auditor fees.

Table of Contents

**PART IV**

**ITEM 15. EXHIBITS AND FINANCIAL STATEMENT SCHEDULES**

(a) - 1. See Index to Financial Statements under Part II, Item 8.

(a) - 2. Financial Statement Schedules for the years 2025, 2024, and 2023 are omitted for the reason that they are not required, or the information is otherwise supplied under Part II, Item 8.

(a) - 3. Exhibits:

The documents listed below are being filed herewith, or have been previously filed on behalf of TXNM, PNM or TNMP, and are incorporated by reference to the filings set forth below pursuant to Exchange Act Rule 12b-32 and Regulation S-K section 10, paragraph (d).

| Exhibit No. | Description of Exhibit | Filed as Exhibit: | Registrant (s) File No: |
|---|---|---|---|
| **Plan of Acquisition, reorganization, liquidation or succession** | | | |
| 2.1 | Agreement and Plan of Merger, dated as of May 18, 2025, by and among TXNM Energy, Inc., Troy ParentCo LLC and Troy Merger Sub Inc. | 2.1 to TXNM's Current Report on Form 8-K filed May 19, 2025 | 1-32462 TXNM |
| **Articles of Incorporation and By-laws** | | | |
| 3.1 | Restated Articles of Incorporation of TXNM Energy, Inc. | 3.1 to TXNM's Current Report on Form 8-K filed August 6, 2024 | 1-32462 TXNM |
| 3.2 | Restated Articles of Incorporation of PNM, as amended through May 31, 2002 | 3.1.1 to PNM's Quarterly Report on Form 10-Q for the quarter ended June 30, 2002 | 1-6986 PNM |
| 3.3 | Articles of Incorporation of TNMP, as amended through July 7, 2005 | 3.1.2 to TNMP's Quarterly Report on Form 10-Q for the quarter ended June 30, 2005 | 2-97230 TNMP |
| 3.4 | Bylaws of TXNM Energy, Inc. with all amendments to and including August 2, 2024 | 3.2 to TXNM's Current Report on Form 8-K filed August 6, 2024 | 1-32462 TXNM |
| 3.5 | Bylaws of PNM, with all amendments to and including July 1, 2022 | 3.5 to PNM's Current Report on Form 8-K filed July 1, 2022 | 1-6986 PNM |
| 3.6 | Bylaws of TNMP with all amendments to and including June 18, 2013 | 3.6 to TNMP's Current Report on Form 8-K filed June 20, 2013 | 2-97230 TNMP |
| **Securities Instruments‡** | | | |
| **TXNM** | | | |
| 4.1 | Description of TXNM Energy, Inc. Securities | 4.1 to TXNM's Annual Report on Form 10-K for the year ended December 31, 2024 | 1-32462 TXNM |
| 4.2 | Indenture, dated as of March 15, 2005, between TXNM and JPMorgan Chase Bank, N.A., as Trustee | 10.2 to TXNM's Current Report on Form 8-K filed March 31, 2005 | 1-32462 TXNM |
| 4.3 | Agreement of Resignation, Appointment and Acceptance, effective as of June 1, 2011, among TXNM, The Bank of New York Mellon Trust Company, N.A. and Union Bank, N.A. (for March 15, 2005 TXNM Indenture) | 4.1 to TXNM's Quarterly Report on Form 10-Q for the quarter ended June 30, 2011 | 1-32462 TXNM |
| 4.4 | Indenture for TXNM Energy, Inc.'s 5.75% Junior Subordinated Convertible Notes due 2054, dated as of June 10, 2024, by and between TXNM Energy, Inc. and Computershare Trust Company, N.A., as trustee | 4.1 to TXNM's Current Report on Form 8-K filed June 10, 2024 | 1-32462 TXNM |
| 4.5 | Indenture for TXNM Energy, Inc.'s 5.75% Junior Subordinated Notes due 2054, dated as of June 10, 2024, by and between TXNM Energy, Inc. and Computershare Trust Company, N.A., as trustee | 4.2 to TXNM's Current Report on Form 8-K filed June 10, 2024 | 1-32462 TXNM |
| 4.6 | Indenture for TXNM Energy, Inc.'s 7.000% Fixed-to-Fixed Reset Rate Junior Subordinated Notes, dated as of December 10, 2025, by and between TXNM Energy, Inc. and U.S. Bank Trust Company, National Association, as trustee | 4.1 to TXNM's Current Report on Form 8-K filed December 10, 2025 | 1-32462 TXNM |

Table of Contents

| | | | |
|---|---|---|---|
| **PNM** | | | |
| 4.7 | Description of Public Service Company of New Mexico Securities | 4.2 to PNM's Annual Report on Form 10-K for the year ended December 31, 2019 | 1-6986 PNM |
| 4.8 | Indenture (for Senior Notes), dated as of March 11, 1998, between PNM and The Chase Manhattan Bank, as Trustee | 4.4 to PNM's Quarterly Report on Form 10-Q for the quarter ended March 31, 1998 | 1-6986 PNM |
| 4.9 | Sixth Supplemental Indenture, dated as of May 1, 2003, supplemental to Indenture dated as of March 11, 1998, between PNM and JPMorgan Chase Bank, as Trustee (PVNGS Maricopa PCRBs, Series 2003A) | 4.6.4 to PNM's Quarterly Report on Form 10-Q for the quarter ended June 30, 2003 | 1-6986 PNM |
| 4.10 | Eighth Supplemental Indenture, dated as of June 1, 2010, supplemental to Indenture dated as of March 11, 1998, between PNM and The Bank of New York Mellon Trust Company (successor to JPMorgan Chase Bank), as Trustee (SJGS Farmington PCRBs Series 2010A-F) | 10.1 to PNM's Current Report on Form 8-K/A filed July 29, 2010 | 1-6986 PNM |
| 4.11 | Ninth Supplemental Indenture, dated as of June 1, 2010, supplemental to Indenture dated as of March 11, 1998, between PNM and The Bank of New York Mellon Trust Company (successor to JPMorgan Chase Bank), as Trustee (PVNGS Maricopa PCRBs Series 2010A-B) | 10.2 to PNM's Current Report on Form 8-K/A filed July 29, 2010 | 1-6986 PNM |
| 4.12 | Agreement of Resignation, Appointment and Acceptance effective as of May 1, 2011, among PNM, The Bank of New York Mellon Trust Company, N.A. and Union Bank, N.A. (for March 11, 1998 PNM Indenture) | 4.2 to PNM's Quarterly Report on Form 10-Q for the quarter ended June 30, 2011 | 1-6986 PNM |
| 4.13 | Eleventh Supplemental Indenture, dated as of September 1, 2016, supplemental to Indenture dated as of March 11, 1998, between PNM and MUFG Union Bank, N.A. (formerly Union Bank, N.A.) (ultimate successor as trustee to The Chase Manhattan Bank), as Trustee (SJGS and Four Corners Farmington PCRBs Series 2016A-B) | 4.1 to PNM's Current Report on Form 8-K filed September 27, 2016 | 1-6986 PNM |
| 4.14 | Indenture (for Senior Notes), dated as of August 1, 1998, between PNM and The Chase Manhattan Bank, as Trustee | 4.1 to PNM's Registration Statement No. 333-53367 | 333-53367 PNM |
| 4.15 | Agreement of Resignation, Appointment and Acceptance, effective as of June 1, 2011, among PNM, The Bank of New York Mellon Trust Company and Union Bank, N.A. (for August 1, 1998 PNM Indenture) | 4.3 to PNM's Quarterly Report on Form 10-Q for the quarter ended June 30, 2011 | 1-6986 PNM |
| 4.16 | Fifth Supplemental Indenture, dated as of August 11, 2015, supplemental to the Indenture dated as of August 1, 1998, between PNM and MUFG Union Bank, N.A., as Trustee ($250,000,000 of 3.85% Senior Notes due 2025, Series 2015) | 4.2 to PNM's Current Report on Form 8-K filed August 11, 2015 | 1-6986 PNM |
| **TNMP** | | | |
| 4.17 | First Mortgage Indenture dated as of March 23, 2009 between TNMP and The Bank of New York Mellon Trust Company, N.A., as Trustee | 4.1 to TNMP's Current Report on Form 8-K filed March 27, 2009 | 2-97230 TNMP |
| 4.18 | Agreement of Resignation, Appointment and Acceptance, effective as of June 1, 2011, among TNMP, The Bank of New York Mellon Trust Company, N.A. and Union Bank, N.A. (for March 23, 2009 TNMP Indenture) | 4.4 to TNMP's Quarterly Report Form 10-Q for the quarter ended June 30, 2011 | 2-97230 TNMP |
| 4.19 | Fifth Supplemental Indenture dated as of April 3, 2013 between TNMP and Union Bank, N.A., as Trustee ($93,198,000 of 6.95% First Mortgage Bonds due 2043, Series 2013A) | 4.1 to TNMP's Current Report on Form 8-K filed April 3, 2013 | 2-97230 TNMP |

Table of Contents

| | | | |
|---|---|---|---|
| 4.20 | Tenth Supplemental Indenture dated as of March 29, 2019 between TNMP and MUFG Union Bank, N.A., as Trustee ($75,000,000 of 3.79% First Mortgage Bonds due 2034, Series 2019B, $75,000,000 of 3.92% First Mortgage Bonds due 2039, Series 2019C, $75,000,000 of 4.06% First Mortgage Bonds due 2044, Series 2019D) | 4.1 to TNMP's Current Report on Form 8-K filed March 29, 2019 | 2-97230 TNMP |
| 4.21 | Eleventh Supplemental Indenture dated as of July 1, 2019 between TNMP and MUFG Union Bank, N.A., as Trustee ($80,000,000 of 3.60% First Mortgage Bonds due 2029, Series 2019A) | 4.1 to TNMP's Current Report on Form 8-K filed July 1, 2019 | 2-97230 TNMP |
| 4.22 | Twelfth Supplemental Indenture, dated as of April 24, 2020, between TNMP and MUFG Union Bank, N.A., as Trustee ($85,000,000 of 2.73% First Mortgage Bonds due 2030, Series 2020A, $25,000,000 of 3.36% First Mortgage Bonds due 2050, Series 2020B) | 4.1 to TNMP's Current Report on Form 8-K filed April 24, 2020 | 2-97230 TNMP |
| 4.23 | Thirteenth Supplemental Indenture, dated as of July 15, 2020, between TNMP and MUFG Union Bank, N.A., as Trustee ($25,000,000 of 2.93% First Mortgage Bonds due 2035, Series 2020C, $50,000,000 of 3.36% First Mortgage Bonds due 2050, Series 2020D) | 4.1 to TNMP's Current Report on Form 8-K filed July 15, 2020 | 2-97230 TNMP |
| 4.24 | Fifteenth Supplemental Indenture, dated as of May 12, 2022, between TNMP and U.S. Bank Trust Company, National Association, as trustee ($65,000,000 of 4.13% First Mortgage Bonds due 2052, Series 2022A) | 4.1 to TNMP's Current Report on Form 8-K filed May 16, 2022 | 2-97230 TNMP |
| 4.25 | Seventeenth Supplemental Indenture, dated as of July 28, 2022, between TNMP and U.S. Bank Trust Company, National Association, as trustee ($95,000,000 of 3.81% First Mortgage Bonds due 2032, Series 2022C) | 4.1 to TNMP's Current Report on Form 8-K filed July 28, 2022 | 2-97230 TNMP |
| 4.26 | Eighteenth Supplemental Indenture, dated as of April 28, 2023, between TNMP and U.S. Bank Trust Company, National Association, as trustee ($130,000,000 of 5.01% First Mortgage Bonds due 2033, Series 2023A) | 4.1 to TNMP's Current Report on Form 8-K filed April 28, 2023 | 2-97230 TNMP |
| 4.27 | Nineteenth Supplemental Indenture, dated as of July 28, 2023, between TNMP and U.S. Bank Trust Company, National Association, as trustee ($55,000,000 of 5.47% First Mortgage Bonds due 2053, Series 2023B) | 4.1 to TNMP's Current Report on Form 8-K filed July 28, 2023 | 2-97230 TNMP |
| 4.28 | Twentieth Supplemental Indenture, dated as of March 28, 2024, between Texas-New Mexico Power Company and U.S. Bank Trust Company, National Association, as Trustee | 4.1 to TNMP's Current Report on Form 8-K filed March 28, 2024 | 2-97230 TNMP |
| 4.29 | Twenty-Second Supplemental Indenture, dated as of July 1, 2024, between Texas-New Mexico Power Company and U.S. Bank Trust Company, National Association, as Trustee | 4.1 to TNMP's Current Report on Form 8-K filed July 1, 2024 | 2-97230 TNMP |
| 4.30 | Twenty-Third Supplemental Indenture, dated as of February 14, 2025, between Texas-New Mexico Power Company and U.S. Bank Trust Company, National Association, as Trustee | 4.1 to TNMP's Current Report on Form 8-K filed February 14, 2025 | 2-97230 TNMP |
| 4.31 | Twenty-Fourth Supplemental Indenture, dated as of July 21, 2025, between Texas-New Mexico Power Company and U.S. Bank Trust Company, National Association, as Trustee | 4.1 to TNMP's Current Report on Form 8-K filed July 22, 2025 | 2-97230 TNMP |
| 4.32 | Twenty-Fifth Supplemental Indenture, dated as of November 6, 2025, between Texas-New Mexico Power Company and U.S. Bank Trust Company, National Association, as Trustee | 4.1 to TNMP's Current Report on Form 8-K filed November 6, 2025 | 2-97230 TNMP |

Table of Contents

| | | | |
|---|---|---|---|
| 4.33 | Twenty-Sixth Supplemental Indenture, dated as of December 18, 2025, between Texas-New Mexico Power Company and U.S. Bank Trust Company, National Association, as Trustee | 4.1 to TNMP's Current Report on Form 8-K filed December 19, 2025 | 2-97230 TNMP |
| 4.34 | Twenty-Seventh Supplemental Indenture, dated as of December 19, 2025, between Texas-New Mexico Power Company and U.S. Bank Trust Company, National Association, as Trustee | 4.2 to TNMP's Current Report on Form 8-K filed December 19, 2025 | 2-97230 TNMP |
| **Material Contracts** | | | |
| 10.1 | Distribution Agreement, dated August 15, 2025, by and among TXNM Energy, Inc., BofA Securities, Inc., MUFG Securities Americas Inc., RBC Capital Markets, LLC and Scotia Capital (USA) Inc. (each as sales agent) and Bank of America, N.A., MUFG Securities EMEA plc, Royal Bank of Canada and The Bank of Nova Scotia (each as forward purchaser) | 10.1 to TXNM's Current Report on Form 8-K filed August 15, 2025 | 1-32462 TXNM |
| 10.2 | Stock Purchase Agreement, dated as of May 18, 2025, by and between TXNM Energy, Inc., and Troy TopCo LP. | 10.3 to TXNM's Current Report on Form 8-K filed May 19, 2025 | 1-32462 TXNM |
| 10.3 | Stock Purchase Agreement, dated as of June 24, 2025, by and among TXNM Energy, Inc., Zimmer Partners, LP and the purchasers named therein | 10.1 to TXNM's Current Report on Form 8-K filed June 24, 2025 | 1-32462 TXNM |
| 10.4 | Twelfth Amendment to and Restatement of Credit Agreement, dated April 1, 2024, among TXNM, the lenders party thereto and Wells Fargo Bank, National Association as Administrative Agent | 10.1 to TXNM's Current Report on Form 8-K filed April 1, 2024 | 1-32462 TXNM |
| 10.5 | Fourteenth Amendment to Credit Agreement, dated as of May 23, 2025, among TXNM Energy, Inc., the lenders party thereto and Wells Fargo Bank, National Association, as administrative agent | 10.1 to TXNM's Current Report on Form 8-K filed May 27, 2025 | 1-32462 TXNM |
| 10.6 | Fifteenth Amendment to Credit Agreement, dated as of December 19, 2025, among TXNM, the lenders party thereto and Wells Fargo Bank, National Association as Administrative Agent | 10.1 to TXNM's Current Report on Form 8-K filed December 19, 2025 | 1-32462 TXNM |
| 10.7 | Seventh Amendment to and Restatement of Credit Agreement, dated as of April 1, 2024, among PNM, the lenders party thereto and Wells Fargo Bank, National Association as Administrative Agent | 10.2 to PNM's Current Report on Form 8-K filed April 1, 2024 | 1-6986 PNM |
| 10.8 | Eighth Amendment to Credit Agreement, dated as of December 19, 2025, among PNM, the lenders party thereto and Wells Fargo Bank, National Association as Administrative Agent | 10.2 to PNM's Current Report on Form 8-K filed December 19, 2025 | 1-6986 PNM |
| 10.9 | Term Loan Agreement, dated as of November 10, 2025, among Public Service Company of New Mexico, the lender parties thereto and U.S. Bank National Association, as Administrative Agent | 10.1 to PNM's Current Report on Form 8-K filed November 10, 2025 | 1-6986 PNM |
| 10.10 | Term Loan Agreement, dated as of January 21, 2025, among Public Service Company of New Mexico, the lender parties thereto and Canadian Imperial Bank of Commerce, New York Branch, as Administrative Agent | 10.1 to PNM's Current Report on Form 8-K filed January 22, 2025 | 1-6986 PNM |
| 10.11 | Note Purchase Agreement dated July 28, 2017 between PNM and the purchasers named therein (PNM 2018 SUNs, Series A-H) | 10.1 to PNM's Quarterly Report on Form 10-Q for the quarter ended June 30, 2017 | 1-6986 PNM |
| 10.12 | Note Purchase Agreement dated April 30, 2020 between PNM and the purchasers named therein (PNM 2020 SUNs, Series A-B) | 10.1 to PNM's Quarterly Report on Form 10-Q for the quarter ended June 30, 2020 | 1-6986 PNM |
| 10.13 | Note Purchase Agreement, dated July 14, 2021, between PNM and the purchasers named therein (PNM 2021 SUNs, Series A-B) | 10.1 to PNM's Current Report on Form 8-K filed July 14, 2021 | 1-6986 PNM |

Table of Contents

| | | | |
|---|---|---|---|
| 10.14 | Note Purchase Agreement, dated September 23, 2021, between PNM and the purchasers named therein (PNM September 2021 SUNs, Series A-B) | 10.1 to PNM's Current Report on Form 8-K filed September 23, 2021 | 1-6986 PNM |
| 10.15 | Note Purchase Agreement, dated April 28, 2023, between PNM and the purchasers named therein (PNM 2023 SUNs, Series A-B) | 10.1 to PNM's Current Report on Form 8-K filed April 28, 2023 | 1-6986 PNM |
| 10.16 | Note Purchase Agreement, dated April 23, 2025, between PNM and the purchasers named therein (PNM 2025 SUNs, Series A-B) | 10.1 to PNM's Current Report on Form 8-K filed April 23, 2025 | 1-6986 PNM |
| 10.17 | Note Purchase Agreement, dated July 31, 2025, between PNM and the purchasers named therein (PNM July 2025 SUNs, Series C-D) | 10.12 to PNM's Quarterly Report on Form 10-Q for the quarter ended June 30, 2025 | 1-6986 PNM |
| 10.18 | Credit Agreement, dated as of April 1, 2024, among TNMP, the lenders party thereto and Wells Fargo Bank, National Association, as Administrative Agent | 10.3 to TNMP's Current Report on Form 8-K filed April 1, 2024 | 2-97230 TNMP |
| 10.19 | First Amendment to Credit Agreement, dated as of May 23, 2025, among TNMP, the lenders party thereto and Wells Fargo Bank, National Association as Administrative Agent | 10.4 to TNMP's Current Report on Form 8-K filed May 27, 2025 | 2-97230 TNMP |
| 10.20 | Second Amendment to Credit Agreement, dated as of December 19, 2025, among TNMP, the lenders party thereto and Wells Fargo Bank, National Association as Administrative Agent | 10.3 to TNMP's Current Report on Form 8-K filed December 19, 2025 | 2-97230 TNMP |
| 10.21 | Bond Purchase Agreement dated February 26, 2019 between TNMP and the purchasers named therein ($80,000,000 of 3.60% First Mortgage Bonds due 2029, Series 2019A; $75,000,000 of 3.79% First Mortgage Bonds due 2034, Series 2019B; $75,000,000 of 3.92% First Mortgage Bonds due 2034, Series 2019C; $75,000,000 of 4.06% First Mortgage Bonds due 2044, Series 2019D) | 10.3 to TNMP's Annual Report on Form 10-K for the year ended December 31, 2018 | 2-97230 TNMP |
| 10.22 | Bond Purchase Agreement dated April 24, 2020, between TNMP and the purchasers named therein ($85,000,000 of 2.73% First Mortgage Bonds due 2030, Series 2020A; $25,000,000 of 3.36% First Mortgage Bonds due 2050, Series 2020B; $25,000,000 of 2.93% First Mortgage Bonds due 2035, Series 2020C; $50,000,000 of 3.36% First Mortgage Bonds due 2050, Series 2020D) | 10.1 to TNMP's Current Report on Form 8-K filed April 24, 2020 | 2-97230 TNMP |
| 10.23 | Bond Purchase Agreement dated April 27, 2022 between TNMP and the purchasers named therein ($65,000,000 of 4.13% First Mortgage Bonds due 2052, Series 2022A, $95,000,000 of 3.81% First Mortgage Bonds due 2032, Series 2022C) | 10.9 to TXNM's Quarterly Report on Form 10-Q for the quarter ended March 31, 2022 | 2-97230 TNMP |
| 10.24 | Bond Purchase Agreement, dated April 28, 2023 between TNMP and the purchasers named therein ($130,000,000 of 5.01% First Mortgage Bonds due 2033, Series 2023A, $55,000,000 of 5.47% First Mortgage Bonds due 2053, Series 2023B) | 10.2 to TNMP's Current Report on Form 8-K filed April 28, 2023 | 2-97230 TNMP |
| 10.25 | Bond Purchase Agreement, dated March 28, 2024, between Texas-New Mexico Power Company and the purchasers named therein ($32,000,000 of 5.26% First Mortgage Bonds due 2029, Series 2024A, $85,000,000 of 5.55% First Mortgage Bonds due 2036, Series 2024B, $40,000,000 of 5.65% First Mortgage Bonds due 2039, Series 2024D, $128,000,000 of 5.79% First Mortgage Bonds due 2054, Series 2024E) | 10.1 to TNMP's Current Report on Form 8-K filed March 28, 2024 | 2-97230 TNMP |
| 10.26 | Bond Purchase Agreement, dated February 14, 2025, between Texas-New Mexico Power Company and the purchasers named therein ($140,000,000 of 5.19% First Mortgage Bonds due 2031, Series 2025A) | 10.1 to TNMP's Current Report on Form 8-K filed February 14, 2025 | 2-97230 TNMP |

Table of Contents

| | | | |
|---|---|---|---|
| 10.27 | Bond Purchase Agreement, dated July 21, 2025, between Texas-New Mexico Power Company and the purchasers named therein ($245,000,000 of 4.83% First Mortgage Bonds due 2030, Series 2025B, $245,000,000 of 5.12% First Mortgage Bonds due 2032, Series 2025C, $240,000,000 of 5.44% First Mortgage Bonds due 2035, Series 2025D, $100,000,000 of 5.54% First Mortgage Bonds due 2037, Series 2025E, $154,300,000 of 5.93% First Mortgage Bonds due 2045, Series 2025F, $100,000,000 of 6.02% First Mortgage Bonds due 2055, Series 2025G) | 10.1 to TNMP's Current Report on Form 8-K filed July 22, 2025 | 2-97230 TNMP |
| 10.28 | Bond Purchase Agreement, dated November 18, 2025, between Texas-New Mexico Power Company and the purchasers named therein ($70,000,000 of 4.69% First Mortgage Bonds due 2031, Series 2025H) | 10.1 to TNMP's Current Report on Form 8-K filed November 18, 2025 | 2-97230 TNMP |
| 10.29** | 2014 Performance Equity Plan dated May 15, 2014 | 4.3 to TXNM's Form S-8 Registration Statement filed May 15, 2014 | 333-195974 TXNM |
| 10.30** | First Amendment to 2014 Performance Equity Plan | 99.1 to TXNM's Current Report on Form 8-K filed December 15, 2015 | 1-32462 TXNM |
| 10.31** | Second Amendment to 2014 Performance Equity Plan effective January 1, 2017 | 10.2 to TXNM's Annual Report on Form 10-K for the year ended December 31, 2016 | 1-32462 TXNM |
| 10.32** | 2023 Performance Equity Plan dated May 16, 2023 | 4.3 to TXNM's Form S-8 Registration Statement filed May 16, 2023 | 333-195974 TXNM |
| 10.33** | First Amendment to TXNM 2023 Performance Equity Plan effective December 18, 2024 | 10.31 to TXNM's Annual Report on Form 10-K for the year ended December 31, 2024 | 333-195974 TXNM |
| 10.34** | TXNM 2024 Officer Annual Incentive Plan dated May 1, 2024 | 10.7 to TXNM's Quarterly Report on Form 10-Q for the quarter ended March 31, 2024 | 1-32462 TXNM |
| 10.35** | First Amendment, dated September 12, 2024, to TXNM 2024 Officer Annual Incentive Plan | 10.1 to TXNM's Quarterly Report on Form 10-Q for the quarter ended September 30, 2024 | 1-32462 TXNM |
| 10.36** | Second Amendment, dated December 18, 2024, to TXNM 2024 Officer Annual Incentive Plan | 10.35 to TXNM's Annual Report on Form 10-K for the year ended December 31, 2024 | 333-195974 TXNM |
| 10.37** | TXNM 2025 Officer Annual Incentive Plan dated April 17, 2025 | 10.3 to TXNM's Quarterly Report on Form 10-Q for the quarter ended March 31, 2025 | 1-32462 TXNM |
| 10.38** | First Amendment dated July 29, 2025 to TXNM 2025 Officer Annual Incentive Plan | 10.7 to TXNM's Quarterly Report on Form 10-Q for the quarter ended June 30, 2025 | 1-32462 TXNM |
| 10.39** | 2019 Long-Term Incentive Plan dated March 28, 2019 | 10.2 to TXNM's Quarterly Report on Form 10-Q for the quarter ended March 31, 2019 | 1-32462 TXNM |
| 10.40** | First Amendment to 2019 Long-Term Incentive Plan executed December 28, 2020 | 10.2 to TXNM's Annual Report on Form 10-K for the year ended December 31, 2020 | 1-32462 TXNM |
| 10.41** | Second Amendment dated March 29, 2021 to 2019 Long-Term Incentive Plan | 10.4 to TXNM's Quarterly Report on Form 10-Q for the quarter ended March 31, 2021 | 1-32462 TXNM |
| 10.42** | 2020 Long-Term Incentive Plan dated March 30, 2020 | 10.9 to TXNM's Quarterly Report on Form 10-Q for the quarter ended March 31, 2020 | 1-32462 TXNM |

Table of Contents

| | | | |
|---|---|---|---|
| 10.43** | First Amendment to 2020 Long-Term Incentive Plan executed December 28, 2020 | 10.6 to TXNM's Annual Report on Form 10-K for the year ended December 31, 2020 | 1-32462 TXNM |
| 10.44** | Second Amendment dated March 29, 2021 to 2020 Long-Term Incentive Plan | 10.5 to TXNM's Quarterly Report on Form 10-Q for the quarter ended March 31, 2021 | 1-32462 TXNM |
| 10.45** | Letter Amendment to 2020 Long-Term Incentive Plan for Patricia Collawn, effective December 4, 2020 | 10.4 to TXNM's Annual Report on Form 10-K for the year ended December 31, 2020 | 1-32462 TXNM |
| 10.46** | Second Letter Amendment to 2020 Long-Term Incentive Plan for Patricia Collawn, effective March 1, 2022 | 10.6 to TXNM's Quarterly Report on Form 10-Q for the quarter ended March 31, 2022 | 1-32462 TXNM |
| 10.47** | Third Amendment dated July 7, 2022 to 2020 Long-Term Incentive Plan | 10.4 to TXNM's Quarterly Report on Form 10-Q for the quarter ended June 30, 2022 | 1-32462 TXNM |
| 10.48** | 2021 Long-Term Incentive Plan dated March 29, 2021 | 10.2 to TXNM's Quarterly Report on Form 10-Q for the quarter ended March 31, 2021 | 1-32462 TXNM |
| 10.49** | First Amendment dated April 19, 2022 to 2021 Long-Term Incentive Plan | 10.4 to TXNM's Quarterly Report on Form 10-Q for the quarter ended March 31, 2022 | 1-32462 TXNM |
| 10.50** | Second Amendment dated July 7, 2022 to 2021 Long-Term Incentive Plan | 10.3 to TXNM's Quarterly Report on Form 10-Q for the quarter ended June 30, 2022 | 1-32462 TXNM |
| 10.51** | 2022 Long-Term Incentive Plan dated April 19, 2022 | 10.3 to TXNM's Quarterly Report on Form 10-Q for the quarter ended March 31, 2022 | 1-32462 TXNM |
| 10.52** | First Amendment dated July 7, 2022 to 2022 Long-Term Incentive Plan | 10.2 to TXNM's Quarterly Report on Form 10-Q for the quarter ended June 30, 2022 | 1-32462 TXNM |
| 10.53** | Second Amendment dated September 12, 2024 to TXNM 2022 Long-Term Incentive Plan | 10.4 to TXNM's Quarterly Report on Form 10-Q for the quarter ended September 30, 2024 | 1-32462 TXNM |
| 10.54** | Third Amendment, dated December 18, 2024 to TXNM 2022 Long-Term Incentive Plan | 10.55 to TXNM's Annual Report on Form 10-K for the year ended December 31, 2024 | 333-195974 TXNM |
| 10.55** | 2023 Long-Term Incentive Plan dated April 19, 2023 | 10.2 to TXNM's Quarterly Report on Form 10-Q for the quarter ended March 31, 2023 | 1-32462 TXNM |
| 10.56** | First Amendment dated May 1, 2024 to 2023 Long-Term Incentive Plan | 10.6 to TXNM's Quarterly Report on Form 10-Q for the quarter ended March 31, 2024 | 1-32462 TXNM |
| 10.57** | Second Amendment dated September 12, 2024 to TXNM 2023 Long-Term Incentive Plan | 10.3 to TXNM's Quarterly Report on Form 10-Q for the quarter ended September 30, 2024 | 1-32462 TXNM |
| 10.58** | Third Amendment, dated December 18, 2024 to TXNM 2023 Long-Term Incentive Plan | 10.59 to TXNM's Annual Report on Form 10-K for the year ended December 31, 2024 | 333-195974 TXNM |
| 10.59** | Fourth Amendment, dated April 17, 2025 to TXNM 2023 Long-Term Incentive Plan | 10.4 to TXNM's Quarterly Report on Form 10-Q for the quarter ended March 31, 2025 | 1-32462 TXNM |
| 10.60** | Fifth Amendment dated July 29, 2025 to TXNM 2023 Long-Term Incentive Plan | 10.10 to TXNM's Quarterly Report on Form 10-Q for the quarter ended June 30, 2025 | 1-32462 TXNM |
| 10.61** | TXNM 2024 Long-Term Incentive Plan dated May 1, 2024 | 10.5 to TXNM's Quarterly Report on Form 10-Q for the quarter ended March 31, 2024 | 1-32462 TXNM |

Table of Contents

| | | | |
|---|---|---|---|
| 10.62** | First Amendment dated September 12, 2024 to TXNM 2024 Long-Term Incentive Plan | 10.2 to TXNM's Quarterly Report on Form 10-Q for the quarter ended September 30, 2024 | 1-32462 TXNM |
| 10.63** | Second Amendment, dated December 18, 2024 to TXNM 2024 Long-Term Incentive Plan | 10.62 to TXNM's Annual Report on Form 10-K for the year ended December 31, 2024 | 333-195974 TXNM |
| 10.64** | Third Amendment, dated April 17, 2025 to TXNM 2024 Long-Term Incentive Plan | 10.5 to TXNM's Quarterly Report on Form 10-Q for the quarter ended March 31, 2025 | 1-32462 TXNM |
| 10.65** | Fourth Amendment dated July 29, 2025 to TXNM 2024 Long-Term Incentive Plan | 10.9 to TXNM's Quarterly Report on Form 10-Q for the quarter ended June 30, 2025 | 1-32462 TXNM |
| 10.66** | TXNM 2025 Long-Term Incentive Plan dated April 17, 2025 | 10.6 to TXNM's Quarterly Report on Form 10-Q for the quarter ended March 31, 2025 | 1-32462 TXNM |
| 10.67** | First Amendment dated July 29, 2025 to TXNM 2025 Long-Term Incentive Plan | 10.8 to TXNM's Quarterly Report on Form 10-Q for the quarter ended June 30, 2025 | 1-32462 TXNM |
| 10.68** | TXNM Director Deferred Stock Rights Program effective December 18, 2024 | 10.63 to TXNM's Annual Report on Form 10-K for the year ended December 31, 2024 | 333-195974 TXNM |
| 10.69** | Acknowledgement Form for officer restricted stock rights and awards granted under the 2014 Performance Equity Plan dated May 15, 2014 | 10.4.2 to TXNM's Annual Report on Form 10-K for the year ended December 31, 2014 | 1-32462 TXNM |
| 10.70** | 2021 Director Compensation Summary | 10.1 to TXNM's Annual Report on Form 10-K for the year ended December 31, 2020 | 1-32462 TXNM |
| 10.71** | 2022 Director Compensation Summary | 10.1 to TXNM's Quarterly Report on Form 10-Q for the quarter ended March 31, 2022 | 1-32462 TXNM |
| 10.72** | Acknowledgement Form with attached Terms and Conditions for restricted stock rights granted to directors on and after 2018 under the 2014 Performance Equity Plan dated May 15, 2014 | 10.5 to TXNM's Annual Report on Form 10-K for the year ended December 31, 2017 | 1-32462 TXNM |
| 10.73** | Acknowledgement Form with attached Terms and Conditions for restricted stock rights granted to directors on and after 2023 under the 2023 Performance Equity Plan dated May 16, 2023 | 10.59 to TXNM's Annual Report on Form 10-K for the year ended December 31, 2023 | 1-32462 TXNM |
| 10.74** | Executive Spending Account Plan (amended and restated effective January 1, 2011) | 10.4 to TXNM's Current Report on Form 8-K filed March 1, 2011 | 1-32462 TXNM |
| 10.75** | First Amendment to Executive Spending Account Plan effective January 1, 2011 | 10.7 to TXNM's Current Report on Form 10-K for the year ended December 31, 2016 | 1-32462 TXNM |
| 10.76** | Second Amendment to Executive Spending Account executed December 13, 2017 | 10.2 to TXNM's Annual Report on Form 10-K for the year ended December 31, 2017 | 1-32462 TXNM |
| 10.77** | Third Amendment to Executive Spending Account effective February 22, 2018 | 10.3 to TXNM's Quarterly Report on Form 10-Q for the quarter ended March 31, 2018 | 1-32462 TXNM |
| 10.78** | Fourth Amendment to TXNM Executive Choice Account Plan (formerly Executive Spending Account) effective January 1, 2025 | 10.7 to TXNM's Quarterly Report on Form 10-Q for the quarter ended March 31, 2025 | 1-32462 TXNM |
| 10.79** | Executive Savings Plan II (amended and restated effective January 1, 2015) | 10.1.2 to TXNM's Annual Report on Form 10-K for the year ended December 31, 2014 | 1-32462 TXNM |
| 10.80** | First Amendment to Executive Savings Plan II executed April 15, 2016 | 10.7 to TXNM's Quarterly Report on Form 10-Q for the quarter ended March 31, 2016 | 1-32462 TXNM |

Table of Contents

| | | | |
|---|---|---|---|
| 10.81** | Second Amendment to Executive Savings Plan II executed December 28, 2020 | 10.7 to TXNM's Annual Report on Form 10-K for the year ended December 31, 2020 | 1-32462 TXNM |
| 10.82** | Third Amendment to Executive Savings Plan II executed December 18, 2024 | 10.76 to TXNM's Annual Report on Form 10-K for the year ended December 31, 2024 | 333-195974 TXNM |
| 10.83** | Summary of Officer Paid Time Off Program | 10.6 to TXNM's Annual Report on Form 10-K for the year ended December 31, 2016 | 1-32462 TXNM |
| 10.84** | Non-Union Severance Pay Plan effective December 1, 2021 | 10.53 to TXNM's Annual Report on Form 10-K for the year ended December 31, 2021 | 1-32462 TXNM |
| 10.85** | First Amendment to Non-Union Severance Pay Plan effective April 17, 2024 | 10.79 to TXNM's Annual Report on Form 10-K for the year ended December 31, 2024 | 333-195974 TXNM |
| 10.86** | Second Amendment to Non-Union Severance Pay Plan effective January 1, 2025 | 10.8 to TXNM's Quarterly Report on Form 10-Q for the quarter ended March 31, 2025 | 1-32462 TXNM |
| 10.87** | Officer Retention Plan executed October 20, 2020, as amended and restated effective as of October 20, 2020 | 10.3 to TXNM's Current Report on Form 8-K filed October 21, 2020 | 1-32462 TXNM |
| 10.88** | First Amendment to Officer Retention Plan effective January 1, 2025 | 10.9 to TXNM's Quarterly Report on Form 10-Q for the quarter ended March 31, 2025 | 1-32462 TXNM |
| 10.89** | Sign-on Equity Grant Restricted Stock Rights Award Agreement, executed September 6, 2024 for Brian G. Iverson | 10.5 to TXNM's Quarterly Report on Form 10-Q for the quarter ended September 30, 2024 | 1-32462 TXNM |
| 10.90** | Officer Life Insurance Plan dated April 28, 2004 | 10.24.1 to TXNM's Quarterly Report on Form 10-Q for the quarter ended March 31, 2004 | 333-32170 TXNM |
| 10.91** | First Amendment to Officer Life Insurance Plan dated December 16, 2004 | 10.27 to TXNM's Annual Report on Form 10-K for the year ended December 31, 2004 | 333-32170 TXNM |
| 10.92** | Second Amendment to Officer Life Insurance Plan executed April 5, 2007 | 10.5 to TXNM's Quarterly Report on Form 10-Q for the quarter ended September 30, 2007 | 1-32462 TXNM |
| 10.93** | Third Amendment to the Officer Life Insurance Plan effective January 1, 2009 | 10.10 to TXNM's Annual Report on Form 10-K for the year ended December 31, 2008 | 1-32462 TXNM |
| 10.94** | Fourth Amendment to the Officer Life Insurance Plan effective January 1, 2009 | 10.15 to TXNM's Annual Report on Form 10-K for the year ended December 31, 2008 | 1-32462 TXNM |
| 10.95** | Fifth Amendment to the Officer Life Insurance Plan executed December 16, 2011 | 10.5 to TXNM's Annual Report on Form 10-K for the year ended December 31, 2011 | 1-32462 TXNM |
| 10.96** | Officer Financial Counseling Program offered by AYCO, a Goldman Sachs Company, effective January 9, 2020 | 10.61 to TXNM's Annual Report on Form 10-K for the year ended December 31, 2021 | 1-32462 TXNM |
| 10.97** | Officers Long Term Disability Coverage Description for Prudential Policy effective January 1, 2012 | 10.8 to TXNM's Annual Report on Form 10-K for the year ended December 31, 2016 | 333-32170 TXNM |
| 10.98** | Form of Amended and Restated Indemnity Agreement for officers and directors approved July 23, 2019 | 10.1 to TXNM's Quarterly Report on Form 10-Q for the quarter ended September 30, 2019 | 1-32462 TXNM |
| 10.99** | Employee Retention Agreement, executed December 4, 2023 for Joseph D. Tarry | 10.81 to TXNM's Annual Report on Form 10-K filed for the year ended December 31, 2023 | 1-32462 TXNM |

Table of Contents

| | | | |
|---|---|---|---|
| 10.100 | Supplemental Indenture of Lease dated as of July 19, 1966 between PNM and other participants in the Four Corners Project and the Navajo Indian Tribal Council | 4-D to PNM's Registration Statement No. 2-26116 | 2-26116 PNM |
| 10.101 | Amendment and Supplement No. 1 to Supplemental and Additional Indenture of Lease dated April 25, 1985 between the Navajo Tribe of Indians and Arizona Public Service Company, El Paso Electric Company, Public Service Company of New Mexico, Salt River project Agricultural Improvement and Power District, Southern California Edison Company, and Tucson Electric Power Company (refiled) | 10.1.1 to PNM's Annual Report on Form 10-K for year ended December 31, 1995 | 1-6986 PNM |
| 10.102 | Amendment and Supplement No. 2 to Supplemental and Additional Indenture of Lease with the Navajo Nation dated March 7, 2011 | 10.1 to PNM's Quarterly Report on Form 10-Q for the quarter ended March 31, 2011 | 1-6986 PNM |
| 10.103 | Amendment and Supplement No. 3 to Supplemental and Additional Indenture of Lease with the Navajo Nation dated March 7, 2011 | 10.2 to PNM's Quarterly Report on Form 10-Q for the quarter ended March 31, 2011 | 1-6986 PNM |
| 10.104 | Arizona Nuclear Power Project Participation Agreement among PNM and Arizona Public Service Company, Salt River Project Agricultural Improvement and Power District, Tucson Gas & Electric Company and El Paso Electric Company, dated August 23, 1973 | 5-T to PNM's Registration Statement No. 2-50338 | 2-50338 PNM |
| 10.105 | Amendments No. 1 through No. 6 to Arizona Nuclear Power Project Participation Agreement | 10.8.1 to PNM's Annual Report on Form 10-K for year ended December 31, 1991 | 1-6986 PNM |
| 10.106 | Amendment No. 7 effective April 1, 1982, to the Arizona Nuclear Power Project Participation Agreement (refiled) | 10.8.2 to PNM's Annual Report on Form 10-K for year ended December 31, 1991 | 1-6986 PNM |
| 10.107 | Amendment No. 8 effective September 12, 1983, to the Arizona Nuclear Power Project Participation Agreement (refiled) | 10.58 to PNM's Annual Report on Form 10-K for year ended December 31, 1993 | 1-6986 PNM |
| 10.108 | Amendment No. 9 to Arizona Nuclear Power Project Participation Agreement dated as of June 12, 1984 (refiled) | 10.8.4 to PNM's Annual Report of the Registrant on Form 10-K for year ended December 31, 1994 | 1-6986 PNM |
| 10.109 | Amendment No. 10 dated as of November 21, 1985 and Amendment No. 11 dated as of June 13, 1986 and effective January 10, 1987 to Arizona Nuclear Power Project Participation Agreement (refiled) | 10.8.5 to PNM's Annual Report of the Registrant on Form 10-K for year ended December 31, 1995 | 1-6986 PNM |
| 10.110 | Amendment No. 12 to Arizona Nuclear Power Project Participation Agreement dated June 14, 1988, and effective August 5, 1988 | 19.1 to PNM's Quarterly Report on Form 10-Q for the quarter ended September 30, 1990 | 1-6986 PNM |
| 10.111 | Amendment No. 13 to the Arizona Nuclear Power Project Participation Agreement dated April 4, 1990, and effective June 15, 1991 | 10.8.10 to PNM's Annual Report on Form 10-K for the year ended December 31, 1990 | 1-6986 PNM |
| 10.112 | Amendment No. 14 to the Arizona Nuclear Power Project Participation Agreement effective June 20, 2000 | 10.8.9 to PNM's Annual Report on Form 10-K for the year ended December 31, 2000 | 1-6986 PNM |
| 10.113 | Amendment No. 15 to the Arizona Nuclear Power Project Participation Agreement dated November 29, 2010 and effective January 13, 2011 | 10.1 to PNM's Current Report on Form 8-K filed March 1, 2011 | 1-6986 PNM |
| 10.114 | Amendment No. 16, effective as of April 28, 2014, to the Arizona Nuclear Power Project Participation Agreement | 10.3 to PNM's Quarterly Report on Form 10-Q for the quarter ended March 31, 2014 | 1-6986 PNM |
| 10.115 | Master Nuclear Decommissioning Trust Fund Agreement for Palo Verde Nuclear Generating Station between Public Service Company of New Mexico and The Northern Trust Company, dated June 4, 2024 | 10.111 to PNM's Annual Report on Form 10-K for the year ended December 31, 2024 | 1-6986 PNM |

Table of Contents

| | | | |
|---|---|---|---|
| 10.116 | Stipulation in the matter of PNM's transition plan Utility Case No. 3137, dated October 10, 2002 as amended by Amendment to Stipulated Agreement dated October 18, 2002 | 10.86 to PNM's Annual Report on Form 10-K for the year ended December 31, 2002 | 1-6986 PNM |
| 10.117 | Stipulation dated February 28, 2005 in NMPRC Case No. 04-00315-UT regarding the application of TXNM and TNMP for approval of the TNP acquisition | 10.134 to TXNM's Quarterly Report on Form 10-Q for the quarter ended March 31, 2005 | 1-32462 TXNM/ TNMP |
| **Policies** | | | |
| 19.1 | Insider Trading Policy | 19.1 to TXNM's Annual Report on Form 10-K for the year ended December 31, 2024 | 1-32462 TXNM |
| **Subsidiaries** | | | |
| 21 | Certain subsidiaries of TXNM | Filed herewith | 1-32462 TXNM |
| **Auditor Consents** | | | |
| 23.1 | Consent of KPMG LLP for TXNM Energy, Inc. | Filed herewith | 1-32462 TXNM |
| **Officer Certifications** | | | |
| 31.1 | Chief Executive Officer Certification Pursuant to Section 302 of the Sarbanes-Oxley Act of 2002 | Filed herewith | 1-32462 TXNM |
| 31.2 | Chief Financial Officer Certification Pursuant to Section 302 of the Sarbanes-Oxley Act of 2002 | Filed herewith | 1-32462 TXNM |
| 31.3 | Chief Executive Officer Certification Pursuant to Section 302 of the Sarbanes-Oxley Act of 2002 | Filed herewith | 1-6986 PNM |
| 31.4 | Chief Financial Officer Certification Pursuant to Section 302 of the Sarbanes-Oxley Act of 2002 | Filed herewith | 1-6986 PNM |
| 31.5 | Chief Executive Officer Certification Pursuant to Section 302 of the Sarbanes-Oxley Act of 2002 | Filed herewith | 2-97230 TNMP |
| 31.6 | Chief Financial Officer Certification Pursuant to Section 302 of the Sarbanes-Oxley Act of 2002 | Filed herewith | 2-97230 TNMP |
| 32.1 | Chief Executive Officer and Chief Financial Officer Certification Pursuant to Section 906 of the Sarbanes-Oxley Act of 2002 | Filed herewith | 1-32462 TXNM |
| 32.2 | Chief Executive Officer and Chief Financial Officer Certification Pursuant to Section 906 of the Sarbanes-Oxley Act of 2002 | Filed herewith | 1-6986 PNM |
| 32.3 | Chief Executive Officer and Chief Financial Officer Certification Pursuant to Section 906 of the Sarbanes-Oxley Act of 2002 | Filed herewith | 2-97230 TNMP |
| **Additional Exhibits** | | | |
| 97 | TXNM Compensation Recoupment Policy (Clawback Policy) | 97 to TXNM's Annual Report on Form 10-K filed for the year ended December 31, 2023 | 1-32462 TXNM |
| 99.1 | Agreement for the Sale and Purchase of Wastewater Effluent, dated November 13, 2000, among the City of Tolleson, Arizona Public Service Company and Salt River Project Agricultural Improvement and Power District | 99.19 to PNM's Annual Report on Form 10-K for year ended December 31, 2013 | 1-6986 PNM |
| 99.2 | Municipal Effluent Purchase and Sale Agreement dated April 23, 2010 between Cities of Phoenix, Mesa, Tempe, Scottsdale and Glendale, Arizona municipal corporations; and APS, SRP, acting on behalf of themselves and EPE, SCE, PNM, SCPPA, and Los Angeles Department of Water and Power | 10.6 to PNM's Quarterly Report on Form 10-Q for the quarter ended March 31, 2010 | 1-6986 PNM |
| **XBRL Exhibits** | | | |
| 101.INS | XBRL Instance Document - The instance document does not appear in the interactive data file because XBRL tags are embedded within the Inline XBRL document | Filed herewith | 1-32462 TXNM/PNM/ TNMP |

Table of Contents

| | | | |
|---|---|---|---|
| 101.SCH | Inline XBRL Taxonomy Extension Schema Document | Filed herewith | 1-32462 TXNM/PNM/ TNMP |
| 101.CAL | Inline XBRL Taxonomy Extension Calculation Linkbase Document | Filed herewith | 1-32462 TXNM/PNM/ TNMP |
| 101.DEF | Inline XBRL Taxonomy Extension Definition Linkbase Document | Filed herewith | 1-32462 TXNM/PNM/ TNMP |
| 101.LAB | Inline XBRL Taxonomy Extension Label Linkbase Document | Filed herewith | 1-32462 TXNM/PNM/ TNMP |
| 101.PRE | Inline XBRL Taxonomy Extension Presentation Linkbase Document | Filed herewith | 1-32462 TXNM/PNM/ TNMP |
| 104 | Cover Page Inline XBRL File (included in Exhibits 101) | Filed herewith | 1-32462 TXNM/PNM/ TNMP |

* One or more additional documents, substantially identical in all material respects to this exhibit, have been entered into, relating to one or more additional sale and leaseback transactions. Although such additional documents may differ in other respects (such as dollar amounts and percentages), there are no material details in which such additional documents differ from this exhibit.

** Designates each management contract or compensatory plan or arrangement required to be identified pursuant to paragraph 3 of Item 15(a) of Form 10-K.

‡ Certain instruments defining the rights of holders of long-term debt of the registrants included in the financial statements of registrants filed herewith have been omitted because the total amount of securities authorized thereunder does not exceed 10% of the total assets of registrants. The registrants hereby agree to furnish a copy of any such omitted instrument to the SEC upon request.

**ITEM 16. FORM 10-K SUMMARY**

None.

Table of Contents

**SIGNATURES**

Pursuant to the requirements of Section 13 or 15(d) of the Securities Exchange Act of 1934, the Registrant has duly caused this report to be signed on its behalf by the undersigned, thereunto duly authorized.

**TXNM Energy, Inc.**
(Registrant)

Date: February 27, 2026 By /s/ J. D. Tarry
J. D. Tarry
President and
Chief Executive Officer

Pursuant to the requirements of the Securities Exchange Act of 1934, this report has been signed below by the following persons on behalf of the Registrant and in the capacities and on the dates indicated.

| Signature | Capacity | Date |
|---|---|---|
| /s/ J. D. Tarry<br>J. D. Tarry<br>President and Chief Executive Officer | Principal Executive Officer and Director | February 27, 2026 |
| /s/ P. K. Collawn<br>P. K. Collawn<br>Executive Chairman | Chairman of the Board | February 27, 2026 |
| /s/ H. E. Monroy<br>H. E. Monroy<br>Senior Vice President and Chief Financial Officer | Principal Financial Officer | February 27, 2026 |
| /s/ G. R. Bischoff<br>G. R. Bischoff<br>Vice President and Corporate Controller | Principal Accounting Officer | February 27, 2026 |
| /s/ V.A. Bailey<br>V.A. Bailey | Director | February 27, 2026 |
| /s/ N.P. Becker<br>N. P. Becker | Director | February 27, 2026 |
| /s/ E. R. Conley<br>E. R. Conley | Director | February 27, 2026 |
| /s/ S. M. Gutierrez<br>S. M. Gutierrez | Director | February 27, 2026 |
| /s/ J.A. Hughes<br>J.A. Hughes | Director | February 27, 2026 |
| /s/ S. Maestas<br>S. Maestas | Director | February 27, 2026 |
| /s/ L. Montoya<br>L. Montoya | Director | February 27, 2026 |
| /s/ M. T. Mullarkey<br>M. T. Mullarkey | Director | February 27, 2026 |

Table of Contents

**SIGNATURES**

Pursuant to the requirements of Section 13 or 15(d) of the Securities Exchange Act of 1934, the Registrant has duly caused this report to be signed on its behalf by the undersigned, thereunto duly authorized.

**PUBLIC SERVICE COMPANY OF NEW MEXICO**
(Registrant)

Date: February 27, 2026 By /s/ J. D. Tarry
J. D. Tarry
President and
Chief Executive Officer

Pursuant to the requirements of the Securities Exchange Act of 1934, this report has been signed below by the following persons on behalf of the Registrant and in the capacities and on the dates indicated.

| Signature | Capacity | Date |
|---|---|---|
| /s/ J. D. Tarry<br>J. D. Tarry<br>President and Chief Executive Officer | Principal Executive Officer and Director | February 27, 2026 |
| /s/ H. E. Monroy<br>H. E. Monroy<br>Senior Vice President and Chief Financial Officer | Principal Financial Officer and Director | February 27, 2026 |
| /s/ G. R. Bischoff<br>G. R. Bischoff<br>Vice President and Corporate Controller | Principal Accounting Officer | February 27, 2026 |
| /s/ P. K. Collawn<br>P. K. Collawn | Chairman of the Board | February 27, 2026 |
| /s/ M. M. Jacobson<br>M. M. Jacobson | Director | February 27, 2026 |

Table of Contents

**SIGNATURES**

Pursuant to the requirements of Section 13 or 15(d) of the Securities Exchange Act of 1934, the Registrant has duly caused this report to be signed on its behalf by the undersigned, thereunto duly authorized.

**TEXAS-NEW MEXICO POWER COMPANY**
(Registrant)

Date: February 27, 2026 By /s/ J. D. Tarry
J. D. Tarry
Chief Executive Officer

Pursuant to the requirements of the Securities Exchange Act of 1934, this report has been signed below by the following persons on behalf of the Registrant and in the capacities and on the dates indicated.

| Signature | Capacity | Date |
|---|---|---|
| /s/ J. D. Tarry<br>J. D. Tarry<br>Chief Executive Officer | Principal Executive Officer and Director | February 27, 2026 |
| /s/ H. E. Monroy<br>H. E. Monroy<br>Senior Vice President and Chief Financial Officer | Principal Financial Officer and Director | February 27, 2026 |
| /s/ G. R. Bischoff<br>G. R. Bischoff<br>Vice President and Corporate Controller | Principal Accounting Officer | February 27, 2026 |
| /s/ P. K. Collawn<br>P. K. Collawn | Chairman of the Board | February 27, 2026 |
| /s/ M. M. Jacobson<br>M. M. Jacobson | Director | February 27, 2026 |
| /s/ J. N. Walker<br>J. N. Walker | Director | February 27, 2026 |

**EXHIBIT 21**

Subsidiaries of TXNM Energy, Inc.

As of December 31, 2025, TXNM Energy, Inc. directly or indirectly owns all of the voting securities of the following subsidiaries:

Public Service Company of New Mexico, a New Mexico corporation that does business under the names “Public Service Company of New Mexico” and “PNM”.

PNM Energy Transition Bond Company I, LLC, a New Mexico corporation that does business under the name "ETBC I" (a wholly-owned subsidiary of PNM)

Texas-New Mexico Power Company, a Texas corporation that does business under the name “Texas-New Mexico Power Company” and “TNMP”.

TNP Enterprises, Inc., a Texas corporation that does business under its corporate name.

The remaining subsidiaries of TXNM Energy, Inc. considered in the aggregate as a single subsidiary, do not constitute a "significant subsidiary" (as defined in Rule 1-02(w) of Regulation S-X) as of the end of the year covered by this report.



KPMG LLP
Two Financial Center
60 South Street
Boston, MA 02111

**Exhibit 23.1**

**Consent of Independent Registered Public Accounting Firm**

We consent to the incorporation by reference in the registration statements Nos. 333-285426 and 333-289430 on Form S-3 and Nos. 333-139108, 333-129454, 333-121371, 333-141282, 333-156243, 333-159362, 333-168797, 333-195974, 333-230575, 333-249764, and 333-271967 on Form S-8 of our report dated February 27, 2026, with respect to the consolidated financial statements and financial statement schedules I to II of TXNM Energy, Inc. and the effectiveness of internal control over financial reporting.

/s/ KPMG LLP

Boston, Massachusetts
February 27, 2026

TXNM Energy, Inc.
414 Silver Ave. SW
Albuquerque, NM 87102-3289

**EXHIBIT 31.1**

**CERTIFICATION**

I, Joseph D. Tarry, certify that:

1. I have reviewed this Annual Report on Form 10-K of TXNM Energy, Inc.;

2. Based on my knowledge, this report does not contain any untrue statement of a material fact or omit to state a material fact necessary to make the statements made, in light of the circumstances under which such statements were made, not misleading with respect to the period covered by this report;

3. Based on my knowledge, the financial statements, and other financial information included in this report, fairly present in all material respects the financial condition, results of operations and cash flows of the registrant as of, and for, the periods presented in this report;

4. The registrant's other certifying officer and I are responsible for establishing and maintaining disclosure controls and procedures (as defined in Exchange Act Rules 13a-15(e) and 15d-15(e)) and internal control over financial reporting (as defined in Exchange Act Rules 13a-15(f) and 15d-15(f)) for the registrant and have:

   a) Designed such disclosure controls and procedures, or caused such disclosure controls and procedures to be designed under our supervision, to ensure that material information relating to the registrant, including its consolidated subsidiaries, is made known to us by others within those entities, particularly during the period in which this report is being prepared;

   b) Designed such internal control over financial reporting, or caused such internal control over financial reporting to be designed under our supervision, to provide reasonable assurance regarding the reliability of financial reporting and the preparation of financial statements for external purposes in accordance with generally accepted accounting principles;

   c) Evaluated the effectiveness of the registrant's disclosure controls and procedures and presented in this report our conclusions about the effectiveness of the disclosure controls and procedures, as of the end of the period covered by this report based on such evaluation; and

   d) Disclosed in this report any change in the registrant's internal control over financial reporting that occurred during the registrant's most recent fiscal quarter (each registrant's fourth fiscal quarter in the case of an annual report) that has materially affected, or is reasonably likely to materially affect, the registrant's internal control over financial reporting;

5. The registrant's other certifying officer and I have disclosed, based on our most recent evaluation of internal control over financial reporting, to the registrant's auditors and the audit committee of the registrant's board of directors (or persons performing the equivalent functions):

   a) All significant deficiencies and material weaknesses in the design or operation of internal controls over financial reporting which are reasonably likely to adversely affect the registrant's ability to record, process, summarize and report financial information; and

   b) Any fraud, whether or not material, that involves management or other employees who have a significant role in the registrant's internal control over financial reporting.

Date: February 27, 2026

By: /s/ Joseph D. Tarry
Joseph D. Tarry
President and Chief Executive Officer
TXNM Energy, Inc.

TXNM Energy, Inc.
414 Silver Ave. SW
Albuquerque, NM 87102-3289

**EXHIBIT 31.2**

**CERTIFICATION**

I, Henry E. Monroy, certify that:

1. I have reviewed this Annual Report on Form 10-K of TXNM Energy, Inc.;

2. Based on my knowledge, this report does not contain any untrue statement of a material fact or omit to state a material fact necessary to make the statements made, in light of the circumstances under which such statements were made, not misleading with respect to the period covered by this report;

3. Based on my knowledge, the financial statements, and other financial information included in this report, fairly present in all material respects the financial condition, results of operations and cash flows of the registrant as of, and for, the periods presented in this report;

4. The registrant's other certifying officer and I are responsible for establishing and maintaining disclosure controls and procedures (as defined in Exchange Act Rules 13a-15(e) and 15d-15(e)) and internal control over financial reporting (as defined in Exchange Act Rules 13a-15(f) and 15d-15(f)) for the registrant and have:

   a) Designed such disclosure controls and procedures, or caused such disclosure controls and procedures to be designed under our supervision, to ensure that material information relating to the registrant, including its consolidated subsidiaries, is made known to us by others within those entities, particularly during the period in which this report is being prepared;

   b) Designed such internal control over financial reporting, or caused such internal control over financial reporting to be designed under our supervision, to provide reasonable assurance regarding the reliability of financial reporting and the preparation of financial statements for external purposes in accordance with generally accepted accounting principles;

   c) Evaluated the effectiveness of the registrant's disclosure controls and procedures and presented in this report our conclusions about the effectiveness of the disclosure controls and procedures, as of the end of the period covered by this report based on such evaluation;

   d) Disclosed in this report any change in the registrant's internal control over financial reporting that occurred during the registrant's most recent fiscal quarter (each registrant's fourth fiscal quarter in the case of an annual report) that has materially affected, or is reasonably likely to materially affect, the registrant's internal control over financial reporting;

5. The registrant's other certifying officer and I have disclosed, based on our most recent evaluation of internal control over financial reporting, to the registrant's auditors and the audit committee of the registrant's board of directors (or persons performing the equivalent functions):

   a) All significant deficiencies and material weaknesses in the design or operation of internal controls over financial reporting which are reasonably likely to adversely affect the registrant's ability to record, process, summarize and report financial information; and

   b) Any fraud, whether or not material, that involves management or other employees who have a significant role in the registrant's internal control over financial reporting.

Date: February 27, 2026

By: /s/ Henry E. Monroy
Henry E. Monroy
Senior Vice President and Chief Financial Officer
TXNM Energy, Inc.

Public Service Company of New Mexico
414 Silver Ave. SW
Albuquerque, NM 87102-3289

**EXHIBIT 31.3**

**CERTIFICATION**

I, Joseph D. Tarry, certify that:

1. I have reviewed this Annual Report on Form 10-K of Public Service Company of New Mexico;

2. Based on my knowledge, this report does not contain any untrue statement of a material fact or omit to state a material fact necessary to make the statements made, in light of the circumstances under which such statements were made, not misleading with respect to the period covered by this report;

3. Based on my knowledge, the financial statements, and other financial information included in this report, fairly present in all material respects the financial condition, results of operations and cash flows of the registrant as of, and for, the periods presented in this report;

4. The registrant's other certifying officer and I are responsible for establishing and maintaining disclosure controls and procedures (as defined in Exchange Act Rules 13a-15(e) and 15d-15(e)) and internal control over financial reporting (as defined in Exchange Act Rules 13a-15(f) and 15d-15(f)) for the registrant and have:

   a) Designed such disclosure controls and procedures, or caused such disclosure controls and procedures to be designed under our supervision, to ensure that material information relating to the registrant, including its consolidated subsidiaries, is made known to us by others within those entities, particularly during the period in which this report is being prepared;

   b) Designed such internal control over financial reporting, or caused such internal control over financial reporting to be designed under our supervision, to provide reasonable assurance regarding the reliability of financial reporting and the preparation of financial statements for external purposes in accordance with generally accepted accounting principles;

   c) Evaluated the effectiveness of the registrant's disclosure controls and procedures and presented in this report our conclusions about the effectiveness of the disclosure controls and procedures, as of the end of the period covered by this report based on such evaluation; and

   d) Disclosed in this report any change in the registrant's internal control over financial reporting that occurred during the registrant's most recent fiscal quarter (each registrant's fourth fiscal quarter in the case of an annual report) that has materially affected, or is reasonably likely to materially affect, the registrant's internal control over financial reporting;

5. The registrant's other certifying officer and I have disclosed, based on our most recent evaluation of internal control over financial reporting, to the registrant's auditors and the audit committee of the registrant's board of directors (or persons performing the equivalent functions):

   a) All significant deficiencies and material weaknesses in the design or operation of internal controls over financial reporting which are reasonably likely to adversely affect the registrant's ability to record, process, summarize and report financial information; and

   b) Any fraud, whether or not material, that involves management or other employees who have a significant role in the registrant's internal control over financial reporting.

Date: February 27, 2026

By: /s/ Joseph D. Tarry
Joseph D. Tarry
President and Chief Executive Officer
Public Service Company of New Mexico

Public Service Company of New Mexico
414 Silver Ave. SW
Albuquerque, NM 87102-3289

**EXHIBIT 31.4**

**CERTIFICATION**

I, Henry E. Monroy, certify that:

1. I have reviewed this Annual Report on Form 10-K of Public Service Company of New Mexico;

2. Based on my knowledge, this report does not contain any untrue statement of a material fact or omit to state a material fact necessary to make the statements made, in light of the circumstances under which such statements were made, not misleading with respect to the period covered by this report;

3. Based on my knowledge, the financial statements, and other financial information included in this report, fairly present in all material respects the financial condition, results of operations and cash flows of the registrant as of, and for, the periods presented in this report;

4. The registrant's other certifying officer and I are responsible for establishing and maintaining disclosure controls and procedures (as defined in Exchange Act Rules 13a-15(e) and 15d-15(e)) and internal control over financial reporting (as defined in Exchange Act Rules 13a-15(f) and 15d-15(f)) for the registrant and have:

   a) Designed such disclosure controls and procedures, or caused such disclosure controls and procedures to be designed under our supervision, to ensure that material information relating to the registrant, including its consolidated subsidiaries, is made known to us by others within those entities, particularly during the period in which this report is being prepared;

   b) Designed such internal control over financial reporting, or caused such internal control over financial reporting to be designed under our supervision, to provide reasonable assurance regarding the reliability of financial reporting and the preparation of financial statements for external purposes in accordance with generally accepted accounting principles;

   c) Evaluated the effectiveness of the registrant's disclosure controls and procedures and presented in this report our conclusions about the effectiveness of the disclosure controls and procedures, as of the end of the period covered by this report based on such evaluation; and

   d) Disclosed in this report any change in the registrant's internal control over financial reporting that occurred during the registrant's most recent fiscal quarter (each registrant's fourth fiscal quarter in the case of an annual report) that has materially affected, or is reasonably likely to materially affect, the registrant's internal control over financial reporting;

5. The registrant's other certifying officer and I have disclosed, based on our most recent evaluation of internal control over financial reporting, to the registrant's auditors and the audit committee of the registrant's board of directors (or persons performing the equivalent functions):

   a) All significant deficiencies and material weaknesses in the design or operation of internal controls over financial reporting which are reasonably likely to adversely affect the registrant's ability to record, process, summarize and report financial information; and

   b) Any fraud, whether or not material, that involves management or other employees who have a significant role in the registrant's internal control over financial reporting.

Date: February 27, 2026

By: /s/ Henry E. Monroy
Henry E. Monroy
Senior Vice President and Chief Financial Officer

Public Service Company of New Mexico

Texas-New Mexico Power Company
577 N. Garden Ridge Blvd.
Lewisville, Texas 75067

**EXHIBIT 31.5**

**CERTIFICATION**

I, Joseph D. Tarry, certify that:

1. I have reviewed this Annual Report on Form 10-K of Texas-New Mexico Power Company;

2. Based on my knowledge, this report does not contain any untrue statement of a material fact or omit to state a material fact necessary in order to make the statements made, in light of the circumstances under which such statements were made, not misleading with respect to the period covered by this report;

3. Based on my knowledge, the financial statements, and other financial information included in this report, fairly present in all material respects the financial condition, results of operations and cash flows of the registrant as of, and for, the periods presented in this report;

4. The registrant's other certifying officer and I are responsible for establishing and maintaining disclosure controls and procedures (as defined in Exchange Act Rules 13a-15(e) and 15d-15(e)) and internal control over financial reporting (as defined in Exchange Act Rules 13a-15(f) and 15d-15(f)) for the registrant and have:

   a) Designed such disclosure controls and procedures, or caused such disclosure controls and procedures to be designed under our supervision, to ensure that material information relating to the registrant, including its consolidated subsidiaries, is made known to us by others within those entities, particularly during the period in which this report is being prepared;

   b) Designed such internal control over financial reporting, or caused such internal control over financial reporting to be designed under our supervision, to provide reasonable assurance regarding the reliability of financial reporting and the preparation of financial statements for external purposes in accordance with generally accepted accounting principles;

   c) Evaluated the effectiveness of the registrant's disclosure controls and procedures and presented in this report our conclusions about the effectiveness of the disclosure controls and procedures, as of the end of the period covered by this report based on such evaluation; and

   d) Disclosed in this report any change in the registrant's internal control over financial reporting that occurred during the registrant's most recent fiscal quarter (the registrant's fourth fiscal quarter in the case of an annual report) that has materially affected, or is reasonably likely to materially affect, the registrant's internal control over financial reporting;

5. The registrant's other certifying officer and I have disclosed, based on our most recent evaluation of internal control over financial reporting, to the registrant's auditors and the audit committee of the registrant's board of directors (or persons performing the equivalent functions):

   a) All significant deficiencies and material weaknesses in the design or operation of internal controls over financial reporting which are reasonably likely to adversely affect the registrant's ability to record, process, summarize and report financial information; and

   b) Any fraud, whether or not material, that involves management or other employees who have a significant role in the registrant's internal control over financial reporting.

Date: February 27, 2026

By: /s/ Joseph D. Tarry
Joseph D. Tarry
Chief Executive Officer
Texas-New Mexico Power Company

Texas-New Mexico Power Company
577 N. Garden Ridge Blvd.
Lewisville, Texas 75067

**EXHIBIT 31.6**

**CERTIFICATION**

I, Henry E. Monroy, certify that:

1. I have reviewed this Annual Report on Form 10-K of Texas-New Mexico Power Company;

2. Based on my knowledge, this report does not contain any untrue statement of a material fact or omit to state a material fact necessary in order to make the statements made, in light of the circumstances under which such statements were made, not misleading with respect to the period covered by this report;

3. Based on my knowledge, the financial statements, and other financial information included in this report, fairly present in all material respects the financial condition, results of operations and cash flows of the registrant as of, and for, the periods presented in this report;

4. The registrant's other certifying officer and I are responsible for establishing and maintaining disclosure controls and procedures (as defined in Exchange Act Rules 13a-15(e) and 15d-15(e)) and internal control over financial reporting (as defined in Exchange Act Rules 13a-15(f) and 15d-15(f)) for the registrant and have:

   a) Designed such disclosure controls and procedures, or caused such disclosure controls and procedures to be designed under our supervision, to ensure that material information relating to the registrant, including its consolidated subsidiaries, is made known to us by others within those entities, particularly during the period in which this report is being prepared;

   b) Designed such internal control over financial reporting, or caused such internal control over financial reporting to be designed under our supervision, to provide reasonable assurance regarding the reliability of financial reporting and the preparation of financial statements for external purposes in accordance with generally accepted accounting principles;

   c) Evaluated the effectiveness of the registrant's disclosure controls and procedures and presented in this report our conclusions about the effectiveness of the disclosure controls and procedures, as of the end of the period covered by this report based on such evaluation; and

   d) Disclosed in this report any change in the registrant's internal control over financial reporting that occurred during the registrant's most recent fiscal quarter (the registrant's fourth fiscal quarter in the case of an annual report) that has materially affected, or is reasonably likely to materially affect, the registrant's internal control over financial reporting;

5. The registrant's other certifying officer and I have disclosed, based on our most recent evaluation of internal control over financial reporting, to the registrant's auditors and the audit committee of the registrant's board of directors (or persons performing the equivalent functions):

   a) All significant deficiencies and material weaknesses in the design or operation of internal controls over financial reporting which are reasonably likely to adversely affect the registrant's ability to record, process, summarize and report financial information; and

   b) Any fraud, whether or not material, that involves management or other employees who have a significant role in the registrant's internal control over financial reporting.

Date: February 27, 2026

By: /s/ Henry E. Monroy
Henry E. Monroy
Senior Vice President and Chief Financial Officer
Texas-New Mexico Power Company

TXNM Energy, Inc.
414 Silver Ave. SW
Albuquerque, NM 87102-3289
www.txnmenergy.com

**EXHIBIT 32.1**

**CERTIFICATION PURSUANT TO 18 U.S.C. § 1350, AS ADOPTED PURSUANT TO § 906 OF THE SARBANES-OXLEY ACT OF 2002**

In connection with the Annual Report on Form 10-K for the period ended December 31, 2025, for TXNM Energy, Inc. ("Company"), as filed with the Securities and Exchange Commission on February 27, 2026 ("Report"), each of the undersigned officers of the Company certifies, pursuant to 18 U.S.C. §1350, as adopted pursuant to § 906 of the Sarbanes-Oxley Act of 2002, that:

(1) the Report fully complies with the requirements of § 13(a) or 15(d) of the Securities Exchange Act of 1934, as amended; and

(2) the information contained in the Report fairly presents, in all material respects, the financial condition and results of operations of the Company.

Date: February 27, 2026

By: /s/ Joseph D. Tarry
Joseph D. Tarry
President and Chief Executive Officer
TXNM Energy, Inc.

By: /s/ Henry E. Monroy
Henry E. Monroy
Senior Vice President and Chief Financial Officer
TXNM Energy, Inc.

Public Service Company of New Mexico
414 Silver Ave. SW
Albuquerque, NM 87102-3289

**EXHIBIT 32.2**

**CERTIFICATION PURSUANT TO 18 U.S.C. § 1350, AS ADOPTED PURSUANT TO § 906 OF THE SARBANES-OXLEY ACT OF 2002**

In connection with the Annual Report on Form 10-K for the period ended December 31, 2025, for Public Service Company of New Mexico ("Company"), as filed with the Securities and Exchange Commission on February 27, 2026 ("Report"), each of the undersigned officers of the Company certifies, pursuant to 18 U.S.C. §1350, as adopted pursuant to § 906 of the Sarbanes-Oxley Act of 2002, that:

(1) the Report fully complies with the requirements of § 13(a) or 15(d) of the Securities Exchange Act of 1934, as amended; and

(2) the information contained in the Report fairly presents, in all material respects, the financial condition and results of operations of the Company.

Date: February 27, 2026

By: /s/ Joseph D. Tarry
Joseph D. Tarry
President and Chief Executive Officer
Public Service Company of New Mexico

By: /s/ Henry E. Monroy
Henry E. Monroy
Senior Vice President and Chief Financial Officer
Public Service Company of New Mexico

Texas-New Mexico Power Company
577 N. Garden Ridge Blvd.
Lewisville, Texas 750

**EXHIBIT 32.3**

**CERTIFICATION PURSUANT TO 18 U.S.C. § 1350, AS ADOPTED PURSUANT TO § 906 OF THE SARBANES-OXLEY ACT OF 2002**

In connection with the Annual Report on Form 10-K for the period ended December 31, 2025, for Texas-New Mexico Power Company ("Company"), as filed with the Securities and Exchange Commission on February 27, 2026 ("Report"), each of the undersigned officers of the Company certifies, pursuant to 18 U.S.C. §1350, as adopted pursuant to § 906 of the Sarbanes-Oxley Act of 2002, that:

(1) the Report fully complies with the requirements of § 13(a) or 15(d) of the Securities Exchange Act of 1934, as amended; and

(2) the information contained in the Report fairly presents, in all material respects, the financial condition and results of operations of the Company.

Date: February 27, 2026

By: /s/ Joseph D. Tarry
Joseph D. Tarry
Chief Executive Officer
Texas-New Mexico Power Company

By: /s/ Henry E. Monroy
Henry E. Monroy
Senior Vice President and Chief Financial Officer
Texas-New Mexico Power Company

Schedule Q-4 Reports to the Securities and Exchange Commission

# September 30, 2025

Attachments to this document are available to the public and can be found at *https://www.txnmenergy.com/investors/financial-information/sec-filings.aspx* or can be retrieved from the NMPRC Records website.

Table of Contents

**UNITED STATES**
**SECURITIES AND EXCHANGE COMMISSION**
Washington, D.C. 20549

# FORM 10-Q

(Mark One)

☒ QUARTERLY REPORT PURSUANT TO SECTION 13 OR 15(d) OF THE SECURITIES EXCHANGE ACT OF 1934

**For the quarterly period ended September 30, 2025**

☐ TRANSITION REPORT PURSUANT TO SECTION 13 OR 15(d) OF THE SECURITIES EXCHANGE ACT OF 1934

**For the transition period from _____ to _____**

Name of Registrant, State of Incorporation, Address Of Principal Executive Offices, Telephone Number, Commission File No., IRS Employer Identification No.

**TXNM Energy, Inc.**
(A New Mexico Corporation)
414 Silver Ave. SW
Albuquerque, New Mexico 87102-3289
Telephone Number - (505) 241-2700
Commission File No. - 001-32462
IRS Employer Identification No. - 85-0468296

**Public Service Company of New Mexico**
(A New Mexico Corporation)
414 Silver Ave. SW
Albuquerque, New Mexico 87102-3289
Telephone Number - (505) 241-2700
Commission File No. - 001-06986
IRS Employer Identification No. - 85-0019030

**Texas-New Mexico Power Company**
(A Texas Corporation)
577 N. Garden Ridge Blvd.
Lewisville, Texas 75067
Telephone Number - (972) 420-4189
Commission File No. - 002-97230
IRS Employer Identification No. - 75-0204070

---

Securities registered pursuant to Section 12(b) of the Act:

| Registrant | Title of each class | Trading Symbol(s) | Name of exchange on which registered |
|---|---|---|---|
| TXNM Energy, Inc. | Common Stock, no par value | TXNM | New York Stock Exchange |

Indicate by check mark whether each registrant (1) has filed all reports required to be filed by Section 13 or 15(d) of the Securities Exchange Act of 1934 during the preceding 12 months (or for such shorter period that the registrant was required to file such reports), and (2) has been subject to such filing requirements for the past 90 days.

| | | | | |
|---|---|---|---|---|
| TXNM Energy, Inc. (“TXNM”) | Yes | ☑ | No | ☐ |
| Public Service Company of New Mexico (“PNM”) | Yes | ☑ | No | ☐ |
| Texas-New Mexico Power Company (“TNMP”) | Yes | ☐ | No | ☑ |

(NOTE: As a voluntary filer, not subject to the filing requirements, TNMP filed all reports under Section 13 or 15(d) of the Securities Exchange Act of 1934 during the preceding 12 months.)

Table of Contents

Indicate by check mark whether each registrant has submitted electronically every Interactive Data File required to be submitted pursuant to Rule 405 of Regulation S-T during the preceding 12 months (or for such shorter period that the registrant was required to submit such files).

| | | | | |
|---|---|---|---|---|
| TXNM | Yes | ☑ | No | ☐ |
| PNM | Yes | ☑ | No | ☐ |
| TNMP | Yes | ☑ | No | ☐ |

Indicate by check mark whether registrant is a large accelerated filer, an accelerated filer, a non-accelerated filer, smaller reporting company, or an emerging growth company. See the definitions of "large accelerated filer," "accelerated filer," "smaller reporting company," and "emerging growth company" in Rule 12b-2 of the Exchange Act.

| | Large accelerated filer | Accelerated filer | Non-accelerated filer | Smaller reporting company | Emerging growth company |
|---|---|---|---|---|---|
| TXNM | ☑ | ☐ | ☐ | ☐ | ☐ |
| | Large accelerated filer | Accelerated filer | Non-accelerated filer | Smaller reporting company | Emerging growth company |
| PNM | ☐ | ☐ | ☑ | ☐ | ☐ |
| | Large accelerated filer | Accelerated filer | Non-accelerated filer | Smaller reporting company | Emerging growth company |
| TNMP | ☐ | ☐ | ☑ | ☐ | ☐ |

If an emerging growth company, indicate by check mark if the registrant has elected not to use the extended transition period for complying with any new or revised financial accounting standards provided pursuant to Section 13(a) of the Exchange Act. ☐

Indicate by check mark whether any of the registrants is a shell company (as defined in Rule 12b-2 of the Exchange Act). Yes ☐ No ☑

As of October 24, 2025, 108,921,356 shares of common stock, no par value per share, of TXNM were outstanding.

The total number of shares of common stock of PNM, no par value per share, outstanding as of October 24, 2025, was 39,117,799 all held by TXNM (and none held by non-affiliates).

The total number of shares of common stock of TNMP, $10 par value per share, outstanding as of October 24, 2025, was 6,358 all held indirectly by TXNM (and none held by non-affiliates).

**PNM AND TNMP MEET THE CONDITIONS SET FORTH IN GENERAL INSTRUCTIONS (H) (1) (a) AND (b) OF FORM 10-Q AND ARE THEREFORE FILING THIS FORM WITH THE REDUCED DISCLOSURE FORMAT PURSUANT TO GENERAL INSTRUCTION (H) (2).**

This combined Form 10-Q is separately filed by TXNM, PNM, and TNMP. Information contained herein relating to any individual registrant is filed by such registrant on its own behalf. Each registrant makes no representation as to information relating to the other registrants. When this Form 10-Q is incorporated by reference into any filing with the SEC made by TXNM, PNM, or TNMP, as a registrant, the portions of this Form 10-Q that relate to each other registrant are not incorporated by reference therein.

Table of Contents

**TXNM ENERGY, INC. AND SUBSIDIARIES**
**PUBLIC SERVICE COMPANY OF NEW MEXICO AND SUBSIDIARIES**
**TEXAS-NEW MEXICO POWER COMPANY AND SUBSIDIARIES**

**INDEX**


| | Page No. |
|---|---|
| **GLOSSARY** | 4 |
| **PART I. FINANCIAL INFORMATION** | |
| **ITEM 1. FINANCIAL STATEMENTS (UNAUDITED)** | |
| **TXNM ENERGY, INC. AND SUBSIDIARIES** | |
| Condensed Consolidated Statements of Earnings | 8 |
| Condensed Consolidated Statements of Comprehensive Income | 9 |
| Condensed Consolidated Statements of Cash Flows | 10 |
| Condensed Consolidated Balance Sheets | 12 |
| Condensed Consolidated Statements of Changes in Equity | 14 |
| **PUBLIC SERVICE COMPANY OF NEW MEXICO AND SUBSIDIARIES** | |
| Condensed Consolidated Statements of Earnings | 15 |
| Condensed Consolidated Statements of Comprehensive Income | 16 |
| Condensed Consolidated Statements of Cash Flows | 17 |
| Condensed Consolidated Balance Sheets | 19 |
| Condensed Consolidated Statements of Changes in Equity | 21 |
| **TEXAS-NEW MEXICO POWER COMPANY AND SUBSIDIARIES** | |
| Condensed Consolidated Statements of Earnings | 22 |
| Condensed Consolidated Statements of Cash Flows | 23 |
| Condensed Consolidated Balance Sheets | 24 |
| Condensed Consolidated Statements of Changes in Common Stockholder's Equity | 26 |
| **NOTES TO CONDENSED CONSOLIDATED FINANCIAL STATEMENTS** | 27 |
| **ITEM 2. MANAGEMENT'S DISCUSSION AND ANALYSIS OF FINANCIAL CONDITION AND RESULTS OF OPERATIONS** | 76 |
| **ITEM 3. QUANTITATIVE AND QUALITATIVE DISCLOSURES ABOUT MARKET RISK** | 110 |
| **ITEM 4. CONTROLS AND PROCEDURES** | 112 |
| **PART II. OTHER INFORMATION** | |
| **ITEM 1. LEGAL PROCEEDINGS** | 113 |
| **ITEM 1A. RISK FACTORS** | 113 |
| **ITEM 5. OTHER INFORMATION** | 115 |
| **ITEM 6. EXHIBITS** | 115 |
| **SIGNATURE** | 116 |

Table of Contents

**GLOSSARY**

Definitions:

| | |
|---|---|
| 2024 Rate Change | PNM's request for a general increase in electric rates filed with the NMPRC on December 5, 2022 using a calendar year 2024 FTY |
| 2025 Rate Request | PNM's request for a general increase in electric rates filed with the NMPRC on June 14, 2024 using a FTY beginning July 1, 2025 |
| 2028 Resource Application | PNM's November 22, 2024 application with the NMPRC for approval of resources to be available for the 2028 summer peak |
| ACE Rule | Affordable Clean Energy Rule |
| AEP OnSite Partners | AEP OnSite Partners, LLC, a subsidiary of American Electric Power, Inc. until the completion of its sale on September 30, 2024 to Basalt Infrastructure Partners LLC |
| AFUDC | Allowance for Funds Used During Construction |
| AOCI | Accumulated Other Comprehensive Income |
| APS | Arizona Public Service Company, the operator and a co-owner of PVNGS and Four Corners |
| ARO | Asset Retirement Obligation |
| ASU | Accounting Standards Update |
| Blackstone Infrastructure | Blackstone Infrastructure Partners L.P. |
| Board | Board of Directors of TXNM |
| CAA | Clean Air Act |
| CAISO | California Independent System Operator |
| Carbon Pollution Standards | Carbon Pollution Standards established by the EPA on August 3, 2015 |
| CCN | Certificate of Convenience and Necessity |
| CCR | Coal Combustion Residuals |
| CCS | Carbon Capture and Storage/Sequestration |
| CIAC | Contributions in Aid of Construction |
| $CO_2$ | Carbon Dioxide |
| CODM | Chief Operating Decision Maker |
| Community Solar Act | Senate Bill 84 effective June 18, 2021 |
| Convertible Notes | TXNM's $550.0 million junior subordinated convertible notes issued on June 10, 2024 and June 21, 2024 |
| DC Circuit | United States Court of Appeals for the District of Columbia Circuit |
| DCRF | TNMP's applications for a distribution cost recovery factor |
| DOE | United States Department of Energy |
| EDAM | Extended Day Ahead Market |
| EEI | Edison Electric Institute, an association representing all U.S. investor-owned electric companies |
| Effective Time | The time the Merger is consummated |
| EGU | Electric Generating Unit |
| EIM | Western Energy Imbalance Market developed and operated by CAISO |
| ELG | Effluent Limitation Guidelines |
| Energy Transition Charge(s) | Rate rider established to collect non-bypassable customer charges for repayment of the ETBC I Securitized Bonds |
| EPA | United States Environmental Protection Agency |
| ERCOT | Electric Reliability Council of Texas |
| ESA(s) | Energy Storage Agreement(s) |
| ETA | The New Mexico Energy Transition Act |
| ETBC I | PNM Energy Transition Bond Company I, LLC, formed on August 25, 2023 |
| ETBC I Securitized Bonds | On November 15, 2023, ETBC I issued $343.2 million aggregate principal amount of its senior secured energy transition bonds, Series A in two tranches |
| EUEA | The New Mexico Efficient Use of Energy Act |
| EV | Electric Vehicle |
| Exchange Act | Securities Exchange Act of 1934, as amended |
| FASB | Financial Accounting Standards Board |
| FERC | Federal Energy Regulatory Commission |
| FIP | Federal Implementation Plan |
| FMB | First Mortgage Bond |
| Four Corners | Four Corners Power Plant |
| Four Corners CSA | Four Corners' coal supply contract with NTEC |
| FPPAC | Fuel and Purchased Power Adjustment Clause |
| FTY | Future Test Year |

Table of Contents

| | |
|---|---|
| GAAP | Generally Accepted Accounting Principles in the United States of America |
| GHG | Greenhouse Gas |
| Grid Modernization Plan | PNM's NMPRC approved plan for grid modernization that includes investments of approximately $344 million for the first six years of a broader 11-year strategy |
| GWh | Gigawatt hours |
| INDC | Intended Nationally Determined Contribution |
| IRA | Inflation Reduction Act of 2022 |
| IRP | Integrated Resource Plan |
| IRS | Internal Revenue Service |
| ISFSI | Independent Spent Fuel Storage Installation |
| kV | Kilovolt |
| KW | Kilowatt |
| KWh | Kilowatt Hour |
| La Joya Wind II | La Joya Wind Facility generating 140 MW of output |
| Lightning Dock Geothermal | Lightning Dock geothermal power facility, also known as the Dale Burgett Geothermal Plant |
| MD&A | Management's Discussion and Analysis of Financial Condition and Results of Operations |
| Merger | The merger of TXNM pursuant to the Merger Agreement, with TXNM surviving as a direct, wholly-owned subsidiary of Parent (an affiliate of Blackstone Infrastructure Partners L.P.) |
| Merger Agreement | The Agreement and Plan of Merger, dated May 18, 2025, by and among TXNM, Parent, and Merger Sub |
| Merger Sub | Troy Merger Sub Inc., a New Mexico corporation, direct subsidiary of Parent and affiliate of Blackstone Infrastructure Partners L.P., which will merge with and into TXNM at the Effective Time of the Merger |
| Meta | Meta Platform, Inc., formerly known as Facebook Inc. |
| MMBTU | Million British Thermal Units |
| Moody's | Moody's Investor Services, Inc. |
| MW | Megawatt |
| MWh | Megawatt Hour |
| NAAQS | National Ambient Air Quality Standards |
| NAV | Net asset value |
| NDT | Nuclear Decommissioning Trusts for PVNGS |
| NEE | New Energy Economy |
| New Mexico Wind | New Mexico Wind Energy Center |
| NM | New Mexico |
| NM 2015 Rate Case | Request for a General Increase in Electric Rates Field by PNM on August 27, 2015 |
| NM 2016 Rate Case | Request for a General Increase in Electric Rates Filed by PNM on December 7, 2016 |
| NM Supreme Court | New Mexico Supreme Court |
| NMED | New Mexico Environment Department |
| NMMMD | The Mining and Minerals Division of the New Mexico Energy, Minerals and Natural Resources Department |
| NMPRC | New Mexico Public Regulation Commission |
| NMRD | NM Renewable Development, LLC, previously owned 50% each by PNMR Development and AEP OnSite Partners, LLC ("AEP OnSite Partners") |
| NOx | Nitrogen Oxides |
| NPDES | National Pollutant Discharge Elimination System |
| NRC | United States Nuclear Regulatory Commission |
| NTEC | Navajo Transitional Energy Company, LLC, an entity owned by the Navajo Nation |
| OBBBA | One Big Beautiful Bill Act of 2025 |
| OCI | Other Comprehensive Income |
| OPEB | Other Post-Employment Benefits |
| OSM | United States Office of Surface Mining Reclamation and Enforcement |
| Parent | Troy ParentCo LLC, a Delaware limited liability company and an affiliate of Blackstone Infrastructure Partners L.P. |
| Paris Agreement | A legally binding international treaty on climate change adopted on December 12, 2015 |
| Pattern Wind | Pattern New Mexico Wind, LLC, an affiliate of Western Spirit and Pattern Development |
| PCRBs | Pollution Control Revenue Bonds |
| PEP | Performance Equity Plan |
| PM | Particulate Matter |
| PNM | Public Service Company of New Mexico and Subsidiaries |

Table of Contents

| | |
|---|---|
| PNM New Mexico Credit Facility | PNM's $40.0 million Unsecured Revolving Credit Facility |
| PNM 2024 Term Loan | PNM's $200.0 million term loan that matures on November 10, 2025 |
| PNM 2025 Term Loan | PNM's $195.0 Million Unsecured Term Loan issued on January 21, 2025 |
| PNM April 2025 Note Purchase Agreement | PNM's agreement for sale of PNM's April 2025 SUNs |
| PNM April 2025 SUNs | PNM's $300.0 million Senior Unsecured Notes issued on April 23, 2025 |
| PNM Revolving Credit Facility | PNM's $400.0 million Unsecured Revolving Credit Facility |
| PNMR Development | PNMR Development and Management Company, an unregulated wholly-owned subsidiary of TXNM |
| PPA | Power Purchase Agreement |
| PUCT | Public Utility Commission of Texas |
| PV | Photovoltaic |
| PVNGS | Palo Verde Nuclear Generating Station |
| RD | Recommended Decision |
| REA | New Mexico's Renewable Energy Act of 2004 |
| RECs | Renewable Energy Certificates |
| Red Mesa Wind | Red Mesa Wind Energy Center |
| REP(s) | Retail Electricity Provider |
| RFP | Request for Proposal |
| ROE | Return on Equity |
| RPS | Renewable Energy Portfolio Standard |
| S&P | Standard and Poor's Ratings Services |
| SEC | United States Securities and Exchange Commission |
| Securities Act | Securities Act of 1933, as amended |
| Securitized Bonds | Energy transition bonds |
| SIP | State Implementation Plan |
| SJGS | San Juan Generating Station |
| $SO_2$ | Sulfur Dioxide |
| SOFR | Secured Overnight Financing Rate |
| SRP | TNMP's System Resiliency Plan |
| SUNs | Senior Unsecured Notes |
| TCJA | Federal tax reform legislation enacted on December 22, 2017, commonly referred to as the Tax Cuts and Jobs Act |
| TCOS | Transmission Cost of Service |
| TECA | Texas Electric Choice Act |
| TEP | Transportation Electrification Program |
| TNMP | Texas-New Mexico Power Company and Subsidiaries |
| TNMP 2018 Rate Case | TNMP's General Rate Case Application filed on May 30, 2018 |
| TNMP 2024 Bonds | TNMP's First Mortgage Bonds issued under the TNMP 2024 Bond Purchase Agreement |
| TNMP 2024 Bond Purchase Agreement | TNMP's Agreement for the sale of an aggregate $285.0 million of TNMP's 2024 Bonds |
| TNMP February 2025 Bonds | TNMP's First Mortgage Bonds issued under the TNMP February 2025 Bond Purchase Agreement |
| TNMP February 2025 Bond Purchase Agreement | TNMP's Agreement for the sale of an aggregate $140.0 Million of TNMP February 2025 Bonds |
| TNMP Revolving Credit Facility | TNMP's $200.0 million Secured Revolving Credit Facility |
| TSA(s) | Transmission Service Agreement(s) |
| TXNM | TXNM Energy, Inc. formerly known as PNM Resources, Inc. ("PNMR") |
| TXNM 2021 Delayed-Draw Term Loan | TXNM's $1.0 billion Unsecured Delayed-Draw Term Loan that matures on May 18, 2025 |
| TXNM 2023 Term Loan | TXNM's $500.0 million term loan that matures on June 30, 2026 |
| TXNM 2024 ATM Program | TXNM's distribution agreement pursuant to which the Company issued and sold an aggregate sales price of $300.0 million of its common stock, no par value, through the sales agents |
| TXNM 2025 ATM Program | TXNM's distribution agreement pursuant to which the Company issued and sold an aggregate sales price of $200.0 million of its common stock, no par value, through the sales agents |
| TXNM Revolving Credit Facility | TXNM's $300.0 million Unsecured Revolving Credit Facility |
| U.S. | The Unites States of America |

Table of Contents

| | |
|---|---|
| U.S. Supreme Court | United States Supreme Court |
| Valencia | Valencia Energy Facility |
| VIE | Variable Interest Entity |
| WACC | Weighted Average Cost of Capital |
| Western Spirit Line | An approximately 150-mile 345-kV transmission line |
| Westmoreland | Westmoreland Coal Company |
| WFB LOC Facility | Letter of credit arrangements with Wells Fargo Bank, N.A., entered into in August 2020 |
| WRAP | Western Resource Adequacy Program |
| WSJ LLC | Westmoreland San Juan, LLC, a subsidiary of Westmoreland Mining Holdings, LLC, and current owner of San Juan Coal Company |

Table of Contents

**PART I. FINANCIAL INFORMATION**

**ITEM 1. FINANCIAL STATEMENTS**

**TXNM ENERGY, INC. AND SUBSIDIARIES**
**CONDENSED CONSOLIDATED STATEMENTS OF EARNINGS**
(Unaudited)

| | Three Months Ended September 30, | | Nine Months Ended September 30, | |
|---|---|---|---|---|
| | 2025 | 2024 | 2025 | 2024 |
| | (In thousands, except per share amounts) | | | |
| **Electric Operating Revenues** | $ 647,162 | $ 569,256 | $ 1,632,374 | $ 1,494,235 |
| **Operating Expenses:** | | | | |
| Cost of energy | 195,042 | 138,909 | 531,846 | 425,919 |
| Administrative and general | 68,445 | 64,840 | 205,205 | 179,848 |
| Energy production costs | 21,172 | 21,259 | 71,799 | 68,055 |
| Regulatory disallowances | (731) | 6,142 | (731) | 10,601 |
| Depreciation and amortization | 105,012 | 97,400 | 314,798 | 285,000 |
| Transmission and distribution costs | 27,167 | 23,660 | 79,133 | 71,475 |
| Taxes other than income taxes | 28,185 | 25,966 | 82,864 | 75,984 |
| Total operating expenses | 444,292 | 378,176 | 1,284,914 | 1,116,882 |
| Operating income | 202,870 | 191,080 | 347,460 | 377,353 |
| **Other Income and Deductions:** | | | | |
| Interest income | 6,496 | 8,669 | 14,615 | 17,719 |
| Gains on investment securities | 11,376 | 13,770 | 33,691 | 32,326 |
| Other income | 7,688 | 7,953 | 18,121 | 20,552 |
| Other (deductions) | (3,028) | (1,988) | (11,767) | (20,146) |
| Net other income and deductions | 22,532 | 28,404 | 54,660 | 50,451 |
| **Interest Charges** | 70,149 | 59,664 | 205,713 | 169,254 |
| **Earnings before Income Taxes** | 155,253 | 159,820 | 196,407 | 258,550 |
| **Income Taxes** | 18,949 | 23,422 | 21,293 | 19,822 |
| **Net Earnings** | 136,304 | 136,398 | 175,114 | 238,728 |
| **(Earnings) Attributable to Valencia Non-controlling Interest** | (5,462) | (5,064) | (13,509) | (11,891) |
| **Preferred Stock Dividend Requirements of Subsidiary** | (132) | (132) | (396) | (396) |
| **Net Earnings Attributable to TXNM** | $ 130,710 | $ 131,202 | $ 161,209 | $ 226,441 |
| **Net Earnings Attributable to TXNM per Common Share:** | | | | |
| Basic | $ 1.22 | $ 1.45 | $ 1.63 | $ 2.50 |
| Diluted | $ 1.22 | $ 1.45 | $ 1.63 | $ 2.50 |
| **Dividends Declared per Common Share** | $ 0.4075 | $ 0.3875 | $ 1.2225 | $ 1.1625 |

The accompanying notes, as they relate to TXNM, are an integral part of these condensed consolidated financial statements.

Table of Contents

**TXNM ENERGY, INC. AND SUBSIDIARIES**
**CONDENSED CONSOLIDATED STATEMENTS OF COMPREHENSIVE INCOME**
(Unaudited)

| | Three Months Ended September 30, | | Nine Months Ended September 30, | |
|---|---|---|---|---|
| | 2025 | 2024 | 2025 | 2024 |
| | (In thousands) | | | |
| **Net Earnings** | $ 136,304 | $ 136,398 | $ 175,114 | $ 238,728 |
| **Other Comprehensive Income:** | | | | |
| **Unrealized Gains on Available-for-Sale Debt Securities**: | | | | |
| Net increase in unrealized holding gains arising during the period, net of income tax (expense) of $(36), $(241), $(164), and $(92) | 105 | 708 | 481 | 270 |
| Reclassification adjustment for (gains) included in net earnings, net of income tax expense of $69, $93, $155, and $3,285 | (204) | (273) | (456) | (9,647) |
| **Pension Liability Adjustment:** | | | | |
| Reclassification adjustment for amortization of experience losses recognized as net periodic benefit cost, net of income tax (benefit) of $(349), $(309), $(1,047), and $(927) | 1,025 | 907 | 3,076 | 2,722 |
| **Fair Value Adjustment for Cash Flow Hedges:** | | | | |
| Change in fair market value, net of income tax (expense) benefit of $(242), $2,383, $391, and $3,477 | 713 | (6,999) | (1,147) | (10,212) |
| Reclassification adjustment for gains included in net earnings, net of income tax (expense) benefit of $0, $(735), $0, and $(2,148) | — | 2,158 | — | 6,308 |
| **Total Other Comprehensive Income (Loss)** | 1,639 | (3,499) | 1,954 | (10,559) |
| **Comprehensive Income** | 137,943 | 132,899 | 177,068 | 228,169 |
| **Comprehensive (Income) Attributable to Valencia Non-controlling Interest** | (5,462) | (5,064) | (13,509) | (11,891) |
| **Preferred Stock Dividend Requirements of Subsidiary** | (132) | (132) | (396) | (396) |
| **Comprehensive Income Attributable to TXNM** | $ 132,349 | $ 127,703 | $ 163,163 | $ 215,882 |

The accompanying notes, as they relate to TXNM, are an integral part of these condensed consolidated financial statements.

Table of Contents

**TXNM ENERGY, INC. AND SUBSIDIARIES**
**CONDENSED CONSOLIDATED STATEMENTS OF CASH FLOWS**
(Unaudited)

| | Nine Months Ended September 30, | |
|---|---|---|
| | **2025** | **2024** |
| | (In thousands) | |
| **Cash Flows From Operating Activities:** | | |
| Net earnings | $ 175,114 | $ 238,728 |
| Adjustments to reconcile net earnings to net cash flows from operating activities: | | |
| Depreciation and amortization | 361,095 | 313,919 |
| Deferred income tax expense | 19,901 | 38,383 |
| (Gain) on sale of NMRD | — | (4,449) |
| (Gains) on investment securities | (33,691) | (32,326) |
| Stock based compensation expense | 6,676 | 7,845 |
| Regulatory disallowances | (731) | 10,601 |
| Allowance for equity funds used during construction | (11,319) | (13,911) |
| Other, net | 2,735 | 3,025 |
| Changes in certain assets and liabilities: | | |
| Accounts receivable and unbilled revenues | (76,923) | (38,466) |
| Materials, supplies, and fuel stock | (6,125) | (22,484) |
| Other current assets | (13,584) | 14,835 |
| Other assets | (27,568) | (80,640) |
| Accounts payable | 3,007 | (24,027) |
| Accrued interest and taxes | 28,770 | 18,462 |
| Other current liabilities | (2,620) | (85,393) |
| Other liabilities | 2,053 | 5,419 |
| Net cash flows from operating activities | 426,790 | 349,521 |
| | | |
| **Cash Flows From Investing Activities:** | | |
| Additions to utility plant and non-utility plant | (886,111) | (905,513) |
| Proceeds from sale of plant assets | — | 2,840 |
| Proceeds from sales of investment securities | 440,720 | 745,645 |
| Purchases of investment securities | (445,054) | (756,591) |
| Proceeds from sale of NMRD | — | 116,936 |
| Investments in NMRD | — | (12,550) |
| Other, net | (75) | 3,375 |
| Net cash flows used in investing activities | (890,520) | (805,858) |

The accompanying notes, as they relate to TXNM, are an integral part of these condensed consolidated financial statements.

Table of Contents

**TXNM ENERGY, INC. AND SUBSIDIARIES**
**CONDENSED CONSOLIDATED STATEMENTS OF CASH FLOWS**
(Unaudited)

| | Nine Months Ended September 30, | |
|---|---|---|
| | **2025** | **2024** |
| | (In thousands) | |
| **Cash Flows From Financing Activities:** | | |
| Revolving credit facilities borrowings | $ 1,910,600 | $ 2,181,800 |
| Revolving credit facilities repayments | (2,206,100) | (1,984,700) |
| Long-term borrowings | 3,153,600 | 1,233,000 |
| Repayment of long-term debt | (2,990,507) | (819,529) |
| Issuance of common stock | 842,891 | — |
| Awards of common stock | (8,433) | (7,983) |
| Dividends paid | (118,855) | (105,254) |
| Valencia's transactions with its owner | (15,102) | (13,780) |
| Transmission interconnection and security deposit arrangements | 33,936 | 79,718 |
| Refunds paid under transmission interconnection and security deposit arrangements | (102,811) | (74,667) |
| Debt issuance costs and other, net | (17,590) | (19,775) |
| Net cash flows from financing activities | 481,629 | 468,830 |
| | | |
| **Change in Cash, Cash Equivalents, and Restricted Cash** | 17,899 | 12,493 |
| **Cash, Cash Equivalents, and Restricted Cash at Beginning of Period** | 22,085 | 3,943 |
| **Cash, Cash Equivalents, and Restricted Cash at End of Period** | $ 39,984 | $ 16,436 |
| | | |
| **Restricted Cash included in Other Current Assets and Other Deferred Charges on Condensed Consolidated Balance Sheets:** | | |
| At beginning of period | $ 17,587 | $ 1,728 |
| At end of period | $ 7,918 | $ 9,201 |
| | | |
| **Supplemental Cash Flow Disclosures:** | | |
| Interest paid, net of amounts capitalized | $ 161,677 | $ 147,418 |
| Income taxes paid (refunded), net | $ 2,350 | $ (395) |
| | | |
| **Supplemental schedule of noncash investing activities:** | | |
| Decrease in accrued plant additions | $ 53,059 | $ 44,714 |

The accompanying notes, as they relate to TXNM, are an integral part of these condensed consolidated financial statements.

Table of Contents

**TXNM ENERGY, INC. AND SUBSIDIARIES**
**CONDENSED CONSOLIDATED BALANCE SHEETS**
(Unaudited)

| | September 30, 2025 | December 31, 2024 |
|---|---|---|
| | (In thousands) | |
| **ASSETS** | | |
| **Current Assets:** | | |
| Cash and cash equivalents | $ 32,066 | $ 4,498 |
| Accounts receivable, net of allowance for credit losses of $1,348 and $1,398 | 190,913 | 130,351 |
| Unbilled revenues | 82,440 | 69,176 |
| Other receivables | 42,256 | 37,236 |
| Materials, supplies, and fuel stock | 172,986 | 166,861 |
| Regulatory assets | 29,157 | 41,492 |
| Prepaid assets | 30,721 | 25,452 |
| Income taxes receivable | 8,642 | 7,684 |
| Other current assets | 6,255 | 16,086 |
| Total current assets | 595,436 | 498,836 |
| **Other Property and Investments:** | | |
| Investment securities | 493,895 | 475,524 |
| Other investments | 268 | 259 |
| Non-utility property, net | 36,678 | 28,832 |
| Total other property and investments | 530,841 | 504,615 |
| **Utility Plant:** | | |
| Plant in service and plant held for future use | 11,109,319 | 10,697,774 |
| Less accumulated depreciation and amortization | 2,966,615 | 2,829,296 |
| | 8,142,704 | 7,868,478 |
| Construction work in progress | 791,841 | 495,976 |
| Nuclear fuel, net of accumulated amortization of $36,411 and $28,245 | 75,723 | 72,554 |
| Net utility plant | 9,010,268 | 8,437,008 |
| **Deferred Charges and Other Assets:** | | |
| Regulatory assets | 953,075 | 962,003 |
| Goodwill | 278,297 | 278,297 |
| Operating lease right-of-use assets, net of accumulated amortization | 320,127 | 272,894 |
| Other deferred charges | 283,490 | 258,080 |
| Total deferred charges and other assets | 1,834,989 | 1,771,274 |
| | $ 11,971,534 | $ 11,211,733 |

The accompanying notes, as they relate to TXNM, are an integral part of these condensed consolidated financial statements.

Table of Contents

**TXNM ENERGY, INC. AND SUBSIDIARIES**
**CONDENSED CONSOLIDATED BALANCE SHEETS**
(Unaudited)

| | September 30, 2025 | December 31, 2024 |
|---|---|---|
| | (In thousands, except share information) | |
| **LIABILITIES AND STOCKHOLDERS' EQUITY** | | |
| **Current Liabilities:** | | |
| Short-term debt | $ 313,800 | $ 609,300 |
| Current installments of long-term debt (includes $7,303 and $6,907 related to ETBC I) | 402,311 | 611,603 |
| Accounts payable | 154,416 | 204,468 |
| Customer deposits | 6,688 | 6,533 |
| Accrued interest and taxes | 134,484 | 104,756 |
| Regulatory liabilities | 23,708 | 34,173 |
| Operating lease liabilities | 15,366 | 14,293 |
| Dividends declared | 43,074 | 36,889 |
| Transmission interconnection arrangement liabilities | — | 68,085 |
| Other current liabilities | 82,373 | 84,998 |
| Total current liabilities | 1,176,220 | 1,775,098 |
| **Long-term Debt, net of Unamortized Premiums, Discounts, and Debt Issuance Costs (includes $324,504 and $331,726 related to ETBC I)** | 4,680,365 | 4,311,765 |
| **Deferred Credits and Other Liabilities:** | | |
| Accumulated deferred income taxes | 945,750 | 899,392 |
| Regulatory liabilities | 760,536 | 748,738 |
| Asset retirement obligations | 248,461 | 244,618 |
| Accrued pension liability and postretirement benefit cost | 15,696 | 23,065 |
| Operating lease liabilities | 300,165 | 255,376 |
| Other deferred credits | 371,467 | 358,867 |
| Total deferred credits and other liabilities | 2,642,075 | 2,530,056 |
| Total liabilities | 8,498,660 | 8,616,919 |
| **Commitments and Contingencies (Note 11)** | | |
| **Cumulative Preferred Stock of Subsidiary** | | |
| without mandatory redemption requirements ($100 stated value; 10,000,000 shares authorized; issued and outstanding 115,293 shares) | 11,529 | 11,529 |
| **Equity:** | | |
| TXNM common stockholders' equity: | | |
| Common stock (no par value; 200,000,000 shares authorized; issued and outstanding 108,921,356 and 92,659,335 shares) | 2,565,578 | 1,724,444 |
| Accumulated other comprehensive income (loss), net of income taxes | (73,754) | (75,708) |
| Retained earnings | 924,214 | 887,649 |
| Total TXNM common stockholders' equity | 3,416,038 | 2,536,385 |
| Non-controlling interest in Valencia | 45,307 | 46,900 |
| Total equity | 3,461,345 | 2,583,285 |
| | $ 11,971,534 | $ 11,211,733 |

The accompanying notes, as they relate to TXNM, are an integral part of these condensed consolidated financial statements.

Table of Contents

**TXNM ENERGY, INC. AND SUBSIDIARIES**
**CONDENSED CONSOLIDATED STATEMENTS OF CHANGES IN EQUITY**
(Unaudited)

| | Attributable to TXNM | | | | | |
|---|---|---|---|---|---|---|
| | Common Stock | AOCI | Retained Earnings | Total TXNM Common Stockholders' Equity | Non-controlling Interest in Valencia | Total Equity |
| | (In thousands) | | | | | |
| **Balance at June 30, 2025** | $ 2,366,770 | $ (75,393) | $ 879,388 | $ 3,170,765 | $ 46,029 | $ 3,216,794 |
| Net earnings before subsidiary preferred stock dividends | — | — | 130,842 | 130,842 | 5,462 | 136,304 |
| Total other comprehensive income | — | 1,639 | — | 1,639 | — | 1,639 |
| Subsidiary preferred stock dividends | — | — | (132) | (132) | — | (132) |
| Dividends declared on common stock | — | — | (85,884) | (85,884) | — | (85,884) |
| Awards of common stock | (184) | — | — | (184) | — | (184) |
| Issuance of common stock | 197,582 | — | — | 197,582 | — | 197,582 |
| Stock based compensation expense | 1,410 | — | — | 1,410 | — | 1,410 |
| Valencia's transactions with its owner | — | — | — | — | (6,184) | (6,184) |
| **Balance at September 30, 2025** | $ 2,565,578 | $ (73,754) | $ 924,214 | $ 3,416,038 | $ 45,307 | $ 3,461,345 |
| | | | | | | |
| **Balance at December 31, 2024** | $ 1,724,444 | $ (75,708) | $ 887,649 | $ 2,536,385 | $ 46,900 | $ 2,583,285 |
| Net earnings before subsidiary preferred stock dividends | — | — | 161,605 | 161,605 | 13,509 | 175,114 |
| Total other comprehensive income | — | 1,954 | — | 1,954 | — | 1,954 |
| Subsidiary preferred stock dividends | — | — | (396) | (396) | — | (396) |
| Dividends declared on common stock | — | — | (124,644) | (124,644) | — | (124,644) |
| Awards of common stock | (8,433) | — | — | (8,433) | — | (8,433) |
| Issuance of common stock | 842,891 | — | — | 842,891 | — | 842,891 |
| Stock based compensation expense | 6,676 | — | — | 6,676 | — | 6,676 |
| Valencia's transactions with its owner | — | — | — | — | (15,102) | (15,102) |
| **Balance at September 30, 2025** | $ 2,565,578 | $ (73,754) | $ 924,214 | $ 3,416,038 | $ 45,307 | $ 3,461,345 |
| | | | | | | |
| **Balance at June 30, 2024** | $ 1,625,251 | $ (69,900) | $ 847,397 | $ 2,402,748 | $ 48,932 | $ 2,451,680 |
| Net earnings before subsidiary preferred stock dividends | — | — | 131,334 | 131,334 | 5,064 | 136,398 |
| Total other comprehensive income (loss) | — | (3,499) | — | (3,499) | — | (3,499) |
| Subsidiary preferred stock dividends | — | — | (132) | (132) | — | (132) |
| Dividends declared on common stock | — | — | (69,906) | (69,906) | — | (69,906) |
| Awards of common stock | (1,735) | — | — | (1,735) | — | (1,735) |
| Stock based compensation expense | 1,169 | — | — | 1,169 | — | 1,169 |
| Valencia's transactions with its owner | — | — | — | — | (5,927) | (5,927) |
| **Balance at September 30, 2024** | $ 1,624,685 | $ (73,399) | $ 908,693 | $ 2,459,979 | $ 48,069 | $ 2,508,048 |
| | | | | | | |
| **Balance at December 31, 2023** | $ 1,624,823 | $ (62,840) | $ 787,110 | $ 2,349,093 | $ 49,958 | $ 2,399,051 |
| Net earnings before subsidiary preferred stock dividends | — | — | 226,837 | 226,837 | 11,891 | 238,728 |
| Total other comprehensive income (loss) | — | (10,559) | — | (10,559) | — | (10,559) |
| Subsidiary preferred stock dividends | — | — | (396) | (396) | — | (396) |
| Dividends declared on common stock | — | — | (104,858) | (104,858) | — | (104,858) |
| Awards of common stock | (7,983) | — | — | (7,983) | — | (7,983) |
| Stock based compensation expense | 7,845 | — | — | 7,845 | — | 7,845 |
| Valencia's transactions with its owner | — | — | — | — | (13,780) | (13,780) |
| **Balance at September 30, 2024** | $ 1,624,685 | $ (73,399) | $ 908,693 | $ 2,459,979 | $ 48,069 | $ 2,508,048 |

The accompanying notes, as they relate to TXNM, are an integral part of these condensed consolidated financial statements.

Table of Contents

**PUBLIC SERVICE COMPANY OF NEW MEXICO AND SUBSIDIARIES**
**A WHOLLY-OWNED SUBSIDIARY OF TXNM ENERGY, INC.**
**CONDENSED CONSOLIDATED STATEMENTS OF EARNINGS**
(Unaudited)

| | Three Months Ended September 30, | | Nine Months Ended September 30, | |
|---|---|---|---|---|
| | 2025 | 2024 | 2025 | 2024 |
| | (In thousands) | | | |
| **Electric Operating Revenues** | $ 463,720 | $ 406,519 | $ 1,135,472 | $ 1,048,305 |
| **Operating Expenses:** | | | | |
| Cost of energy | 152,853 | 101,495 | 408,143 | 313,679 |
| Administrative and general | 61,421 | 59,809 | 178,557 | 166,421 |
| Energy production costs | 21,172 | 21,259 | 71,799 | 68,055 |
| Regulatory disallowances | (731) | 6,142 | (731) | 10,601 |
| Depreciation and amortization | 61,366 | 56,424 | 181,947 | 163,941 |
| Transmission and distribution costs | 18,127 | 15,123 | 49,703 | 44,823 |
| Taxes other than income taxes | 14,111 | 12,258 | 42,676 | 37,735 |
| Total operating expenses | 328,319 | 272,510 | 932,094 | 805,255 |
| Operating income | 135,401 | 134,009 | 203,378 | 243,050 |
| **Other Income and Deductions:** | | | | |
| Interest income | 4,271 | 8,674 | 12,217 | 17,644 |
| Gains on investment securities | 11,376 | 13,770 | 33,691 | 32,326 |
| Other income | 3,761 | 4,407 | 9,124 | 12,049 |
| Other (deductions) | (2,074) | (881) | (7,893) | (2,664) |
| Net other income and deductions | 17,334 | 25,970 | 47,139 | 59,355 |
| **Interest Charges** | 33,805 | 27,852 | 95,596 | 78,848 |
| **Earnings before Income Taxes** | 118,930 | 132,127 | 154,921 | 223,557 |
| **Income Taxes** | 10,907 | 18,265 | 13,280 | 29,897 |
| **Net Earnings** | 108,023 | 113,862 | 141,641 | 193,660 |
| **(Earnings) Attributable to Valencia Non-controlling Interest** | (5,462) | (5,064) | (13,509) | (11,891) |
| **Net Earnings Attributable to PNM** | 102,561 | 108,798 | 128,132 | 181,769 |
| **Preferred Stock Dividend Requirements** | (132) | (132) | (396) | (396) |
| **Net Earnings Available for PNM Common Stock** | $ 102,429 | $ 108,666 | $ 127,736 | $ 181,373 |

The accompanying notes, as they relate to PNM, are an integral part of these condensed consolidated financial statements.

Table of Contents

**PUBLIC SERVICE COMPANY OF NEW MEXICO AND SUBSIDIARIES**
**A WHOLLY-OWNED SUBSIDIARY OF TXNM ENERGY, INC.**
**CONDENSED CONSOLIDATED STATEMENTS OF COMPREHENSIVE INCOME**
(Unaudited)

| | Three Months Ended September 30, | | Nine Months Ended September 30, | |
|---|---|---|---|---|
| | **2025** | **2024** | **2025** | **2024** |
| | (In thousands) | | | |
| **Net Earnings** | $ 108,023 | $ 113,862 | $ 141,641 | $ 193,660 |
| **Other Comprehensive Income:** | | | | |
| **Unrealized Gains on Available-for-Sale Debt Securities**: | | | | |
| Net increase in unrealized holding gains arising during the period, net of income tax (expense) of $(36), $(241), $(164), and $(92) | 105 | 708 | 481 | 270 |
| Reclassification adjustment for (gains) included in net earnings, net of income tax expense of $69, $93, $155, and $3,285 | (204) | (273) | (456) | (9,647) |
| **Pension Liability Adjustment:** | | | | |
| Reclassification adjustment for amortization of experience losses recognized as net periodic benefit cost, net of income tax (benefit) of $(349), $(309), $(1,047), and $(927) | 1,025 | 907 | 3,076 | 2,722 |
| **Total Other Comprehensive Income (Loss)** | 926 | 1,342 | 3,101 | (6,655) |
| **Comprehensive Income** | 108,949 | 115,204 | 144,742 | 187,005 |
| **Comprehensive (Income) Attributable to Valencia Non-controlling Interest** | (5,462) | (5,064) | (13,509) | (11,891) |
| **Comprehensive Income Attributable to PNM** | $ 103,487 | $ 110,140 | $ 131,233 | $ 175,114 |

The accompanying notes, as they relate to PNM, are an integral part of these condensed consolidated financial statements.

Table of Contents

**PUBLIC SERVICE COMPANY OF NEW MEXICO AND SUBSIDIARIES**
**A WHOLLY-OWNED SUBSIDIARY OF TXNM ENERGY, INC.**
**CONDENSED CONSOLIDATED STATEMENTS OF CASH FLOWS**
(Unaudited)

| | Nine Months Ended September 30, | |
|---|---|---|
| | **2025** | **2024** |
| | (In thousands) | |
| **Cash Flows From Operating Activities:** | | |
| Net earnings | $ 141,641 | $ 193,660 |
| Adjustments to reconcile net earnings to net cash flows from operating activities: | | |
| Depreciation and amortization | 210,111 | 185,815 |
| Deferred income tax expense (benefit) | 13,623 | 23,710 |
| (Gains) on investment securities | (33,691) | (32,326) |
| Regulatory disallowances | (731) | 10,601 |
| Allowance for equity funds used during construction | (5,986) | (10,503) |
| Other, net | 2,942 | 3,055 |
| Changes in certain assets and liabilities: | | |
| Accounts receivable and unbilled revenues | (53,639) | (22,676) |
| Materials, supplies, and fuel stock | 114 | (13,928) |
| Other current assets | (4,620) | 5,064 |
| Other assets | (10,891) | (37,489) |
| Accounts payable | (573) | (17,022) |
| Accrued interest and taxes | 22,674 | 26,457 |
| Other current liabilities | (3,662) | (76,559) |
| Other liabilities | (16,266) | (3,068) |
| Net cash flows from operating activities | 261,046 | 234,791 |
| | | |
| **Cash Flows From Investing Activities:** | | |
| Utility plant additions | (447,091) | (493,381) |
| Proceeds from sale of plant assets | — | 2,840 |
| Proceeds from sales of investment securities | 440,720 | 745,645 |
| Purchases of investment securities | (445,054) | (756,591) |
| Other, net | (84) | 3,376 |
| Net cash flows used in investing activities | (451,509) | (498,111) |

The accompanying notes, as they relate to PNM, are an integral part of these condensed consolidated financial statements.

Table of Contents

**PUBLIC SERVICE COMPANY OF NEW MEXICO AND SUBSIDIARIES**
**A WHOLLY-OWNED SUBSIDIARY OF TXNM ENERGY, INC.**
**CONDENSED CONSOLIDATED STATEMENTS OF CASH FLOWS**
(Unaudited)

| | Nine Months Ended September 30, | |
|---|---|---|
| | **2025** | **2024** |
| | (In thousands) | |
| **Cash Flows From Financing Activities:** | | |
| Revolving credit facilities borrowings | $ 784,400 | $ 1,025,500 |
| Revolving credit facilities repayments | (989,900) | (983,100) |
| Long-term borrowings | 845,000 | 398,000 |
| Repayment of long-term debt | (360,907) | (200,529) |
| Equity contribution from parent | — | 55,000 |
| Dividends paid | (396) | (396) |
| Valencia's transactions with its owner | (15,102) | (13,780) |
| Transmission interconnection and security deposit arrangements | 11,486 | 68,468 |
| Refunds paid under transmission interconnection and security deposit arrangements | (82,061) | (69,817) |
| Debt issuance costs and other, net | (5,258) | (4,260) |
| Net cash flows from financing activities | 187,262 | 275,086 |
| **Change in Cash, Cash Equivalents, and Restricted Cash** | (3,201) | 11,766 |
| **Cash, Cash Equivalents, and Restricted Cash at Beginning of Period** | 20,285 | 2,586 |
| **Cash, Cash Equivalents, and Restricted Cash at End of Period** | $ 17,084 | $ 14,352 |
| **Restricted Cash included in Other Current Assets and Other Deferred Charges on Condensed Consolidated Balance Sheets:** | | |
| At beginning of period | $ 17,587 | $ 1,728 |
| At end of period | $ 7,918 | $ 9,201 |
| **Supplemental Cash Flow Disclosures:** | | |
| Interest paid, net of amounts capitalized | $ 77,316 | $ 58,652 |
| Income taxes paid (refunded), net | $ — | $ (1,707) |
| **Supplemental schedule of noncash investing activities:** | | |
| Decrease in accrued plant additions | $ 14,433 | $ 17,238 |

The accompanying notes, as they relate to PNM, are an integral part of these condensed consolidated financial statements.

Table of Contents

**PUBLIC SERVICE COMPANY OF NEW MEXICO AND SUBSIDIARIES**
**A WHOLLY-OWNED SUBSIDIARY OF TXNM ENERGY, INC.**
**CONDENSED CONSOLIDATED BALANCE SHEETS**
(Unaudited)

| | September 30, 2025 | December 31, 2024 |
|---|---|---|
| | (In thousands) | |
| **ASSETS** | | |
| **Current Assets:** | | |
| Cash and cash equivalents | $ 9,166 | $ 2,698 |
| Accounts receivable, net of allowance for credit losses of $1,348 and $1,398 | 139,929 | 95,932 |
| Unbilled revenues | 59,528 | 52,983 |
| Other receivables | 23,047 | 24,174 |
| Affiliate receivables | 8,749 | 9,241 |
| Materials, supplies, and fuel stock | 142,396 | 142,510 |
| Regulatory assets | 29,157 | 36,224 |
| Prepaid assets | 19,482 | 14,746 |
| Income taxes receivable | 16,652 | 16,309 |
| Other current assets | 6,277 | 16,091 |
| Total current assets | 454,383 | 410,908 |
| **Other Property and Investments:** | | |
| Investment securities | 493,895 | 475,524 |
| Other investments | 268 | 184 |
| Non-utility property, net | 15,497 | 13,647 |
| Total other property and investments | 509,660 | 489,355 |
| **Utility Plant:** | | |
| Plant in service and plant held for future use | 6,992,482 | 6,797,493 |
| Less accumulated depreciation and amortization | 2,170,103 | 2,079,363 |
| | 4,822,379 | 4,718,130 |
| Construction work in progress | 487,546 | 328,403 |
| Nuclear fuel, net of accumulated amortization of $36,411 and $28,245 | 75,723 | 72,554 |
| Net utility plant | 5,385,648 | 5,119,087 |
| **Deferred Charges and Other Assets:** | | |
| Regulatory assets | 839,091 | 857,310 |
| Goodwill | 51,632 | 51,632 |
| Operating lease right-of-use assets, net of accumulated amortization | 319,432 | 271,433 |
| Other deferred charges | 233,460 | 207,554 |
| Total deferred charges and other assets | 1,443,615 | 1,387,929 |
| | $ 7,793,306 | $ 7,407,279 |

The accompanying notes, as they relate to PNM, are an integral part of these condensed consolidated financial statements.

Table of Contents

**PUBLIC SERVICE COMPANY OF NEW MEXICO AND SUBSIDIARIES**
**A WHOLLY-OWNED SUBSIDIARY OF TXNM ENERGY, INC.**
**CONDENSED CONSOLIDATED BALANCE SHEETS**
(Unaudited)

| | September 30, 2025 | December 31, 2024 |
|---|---|---|
| | (In thousands, except share information) | |
| **LIABILITIES AND STOCKHOLDER'S EQUITY** | | |
| **Current Liabilities:** | | |
| Short-term debt | $ 158,300 | $ 363,800 |
| Current installments of long-term debt (includes $7,303 and $6,907 related to ETBC I) | 402,311 | 560,637 |
| Accounts payable | 108,877 | 123,883 |
| Affiliate payables | 14,454 | 15,695 |
| Customer deposits | 6,688 | 6,533 |
| Accrued interest and taxes | 69,940 | 46,923 |
| Regulatory liabilities | 21,152 | 33,571 |
| Operating lease liabilities | 15,164 | 13,542 |
| Dividends declared | 132 | 132 |
| Transmission interconnection arrangement liabilities | — | 68,085 |
| Other current liabilities | 48,943 | 50,099 |
| Total current liabilities | 845,961 | 1,282,900 |
| **Long-term Debt, net of Unamortized Premiums, Discounts, and Debt Issuance Costs (includes $324,504 and $331,726 related to ETBC I)** | 2,539,180 | 1,898,955 |
| **Deferred Credits and Other Liabilities:** | | |
| Accumulated deferred income taxes | 794,421 | 756,218 |
| Regulatory liabilities | 499,955 | 518,701 |
| Asset retirement obligations | 247,446 | 243,663 |
| Accrued pension liability and postretirement benefit cost | 15,288 | 22,067 |
| Operating lease liabilities | 299,662 | 254,702 |
| Other deferred credits | 226,422 | 234,346 |
| Total deferred credits and liabilities | 2,083,194 | 2,029,697 |
| Total liabilities | 5,468,335 | 5,211,552 |
| **Commitments and Contingencies (Note 11)** | | |
| **Cumulative Preferred Stock** | | |
| without mandatory redemption requirements ($100 stated value; 10,000,000 shares authorized; issued and outstanding 115,293 shares) | 11,529 | 11,529 |
| **Equity:** | | |
| PNM common stockholder's equity: | | |
| Common stock (no par value; 40,000,000 shares authorized; issued and outstanding 39,117,799 shares) | 1,602,918 | 1,602,918 |
| Accumulated other comprehensive income (loss), net of income taxes | (72,607) | (75,708) |
| Retained earnings | 737,824 | 610,088 |
| Total PNM common stockholder's equity | 2,268,135 | 2,137,298 |
| Non-controlling interest in Valencia | 45,307 | 46,900 |
| Total equity | 2,313,442 | 2,184,198 |
| | $ 7,793,306 | $ 7,407,279 |

The accompanying notes, as they relate to PNM, are an integral part of these condensed consolidated financial statements.

Table of Contents

**PUBLIC SERVICE COMPANY OF NEW MEXICO AND SUBSIDIARIES**
**A WHOLLY-OWNED SUBSIDIARY OF TXNM ENERGY, INC.**
**CONDENSED CONSOLIDATED STATEMENTS OF CHANGES IN EQUITY**
(Unaudited)

| | Attributable to PNM | | | | | |
|---|---|---|---|---|---|---|
| | Common Stock | AOCI | Retained Earnings | Total PNM Common Stockholder's Equity | Non-controlling Interest in Valencia | Total Equity |
| | (In thousands) | | | | | |
| **Balance at June 30, 2025** | $ 1,602,918 | $ (73,533) | $ 635,395 | $ 2,164,780 | $ 46,029 | $ 2,210,809 |
| Net earnings | — | — | 102,561 | 102,561 | 5,462 | 108,023 |
| Total other comprehensive income | — | 926 | — | 926 | — | 926 |
| Dividends declared on preferred stock | — | — | (132) | (132) | — | (132) |
| Valencia's transactions with its owner | — | — | — | — | (6,184) | (6,184) |
| **Balance at September 30, 2025** | $ 1,602,918 | $ (72,607) | $ 737,824 | $ 2,268,135 | $ 45,307 | $ 2,313,442 |
| | | | | | | |
| **Balance at December 31, 2024** | $ 1,602,918 | $ (75,708) | $ 610,088 | $ 2,137,298 | $ 46,900 | $ 2,184,198 |
| Net earnings | — | — | 128,132 | 128,132 | 13,509 | 141,641 |
| Total other comprehensive income | — | 3,101 | — | 3,101 | — | 3,101 |
| Dividends declared on preferred stock | — | — | (396) | (396) | — | (396) |
| Valencia's transactions with its owner | — | — | — | — | (15,102) | (15,102) |
| **Balance at September 30, 2025** | $ 1,602,918 | $ (72,607) | $ 737,824 | $ 2,268,135 | $ 45,307 | $ 2,313,442 |
| | | | | | | |
| **Balance at June 30, 2024** | $ 1,602,918 | $ (74,502) | $ 542,111 | $ 2,070,527 | $ 48,932 | $ 2,119,459 |
| Net earnings | — | — | 108,798 | 108,798 | 5,064 | 113,862 |
| Total other comprehensive income | — | 1,342 | — | 1,342 | — | 1,342 |
| Dividends declared on preferred stock | — | — | (132) | (132) | — | (132) |
| Valencia's transactions with its owner | — | — | — | — | (5,927) | (5,927) |
| **Balance at September 30, 2024** | $ 1,602,918 | $ (73,160) | $ 650,777 | $ 2,180,535 | $ 48,069 | $ 2,228,604 |
| | | | | | | |
| **Balance at December 31, 2023** | $ 1,547,918 | $ (66,505) | $ 469,404 | $ 1,950,817 | $ 49,958 | $ 2,000,775 |
| Net earnings | — | — | 181,769 | 181,769 | 11,891 | 193,660 |
| Total other comprehensive income (loss) | — | (6,655) | — | (6,655) | — | (6,655) |
| Dividends declared on preferred stock | — | — | (396) | (396) | — | (396) |
| Equity contribution from parent | 55,000 | — | — | 55,000 | — | 55,000 |
| Valencia's transactions with its owner | — | — | — | — | (13,780) | (13,780) |
| **Balance at September 30, 2024** | $ 1,602,918 | $ (73,160) | $ 650,777 | $ 2,180,535 | $ 48,069 | $ 2,228,604 |

The accompanying notes, as they relate to PNM, are an integral part of these condensed consolidated financial statements.

Table of Contents

**TEXAS-NEW MEXICO POWER COMPANY AND SUBSIDIARIES**
**A WHOLLY-OWNED SUBSIDIARY OF TXNM ENERGY, INC.**
**CONDENSED CONSOLIDATED STATEMENTS OF EARNINGS**
(Unaudited)

| | Three Months Ended September 30, | | Nine Months Ended September 30, | |
|---|---|---|---|---|
| | **2025** | **2024** | **2025** | **2024** |
| | (In thousands) | | | |
| **Electric Operating Revenues** | $ 183,442 | $ 162,737 | $ 496,902 | $ 445,930 |
| **Operating Expenses:** | | | | |
| Cost of energy | 42,189 | 37,414 | 123,703 | 112,240 |
| Administrative and general | 13,858 | 14,423 | 40,893 | 41,797 |
| Depreciation and amortization | 34,956 | 31,732 | 105,095 | 93,147 |
| Transmission and distribution costs | 9,040 | 8,537 | 29,430 | 26,652 |
| Taxes other than income taxes | 12,659 | 12,161 | 35,607 | 33,571 |
| Total operating expenses | 112,702 | 104,267 | 334,728 | 307,407 |
| Operating income | 70,740 | 58,470 | 162,174 | 138,523 |
| **Other Income and Deductions:** | | | | |
| Interest income | 2,281 | 130 | 2,594 | 426 |
| Other income | 3,716 | 3,137 | 8,000 | 7,292 |
| Other (deductions) | (374) | (852) | (871) | (1,426) |
| Net other income and deductions | 5,623 | 2,415 | 9,723 | 6,292 |
| **Interest Charges** | 24,754 | 15,924 | 66,018 | 43,711 |
| **Earnings before Income Taxes** | 51,609 | 44,961 | 105,879 | 101,104 |
| **Income Taxes** | 10,479 | 9,266 | 21,498 | 20,901 |
| **Net Earnings** | $ 41,130 | $ 35,695 | $ 84,381 | $ 80,203 |

The accompanying notes, as they relate to TNMP, are an integral part of these condensed consolidated financial statements.

Table of Contents

**TEXAS-NEW MEXICO POWER COMPANY AND SUBSIDIARIES**
**A WHOLLY-OWNED SUBSIDIARY OF TXNM ENERGY, INC.**
**CONDENSED CONSOLIDATED STATEMENTS OF CASH FLOWS**
(Unaudited)

| | Nine Months Ended September 30, | |
|---|---|---|
| | **2025** | **2024** |
| | (In thousands) | |
| **Cash Flows From Operating Activities:** | | |
| Net earnings | $ 84,381 | $ 80,203 |
| Adjustments to reconcile net earnings to net cash flows from operating activities: | | |
| Depreciation and amortization | 114,648 | 93,892 |
| Deferred income tax expense | 11,779 | 17,432 |
| Allowance for equity funds used during construction and other, net | (5,539) | (3,543) |
| Changes in certain assets and liabilities: | | |
| Accounts receivable and unbilled revenues | (23,284) | (15,791) |
| Materials and supplies | (6,239) | (8,556) |
| Other current assets | (10,908) | 9,526 |
| Other assets | (8,711) | (26,686) |
| Accounts payable | 3,985 | (1,980) |
| Accrued interest and taxes | 5,757 | 1,688 |
| Other current liabilities | 13,330 | (4,503) |
| Other liabilities | 14,130 | 1,860 |
| Net cash flows from operating activities | 193,329 | 143,542 |
| **Cash Flows From Investing Activities:** | | |
| Utility plant additions | (400,769) | (392,933) |
| Net cash flows used in investing activities | (400,769) | (392,933) |
| **Cash Flows From Financing Activities:** | | |
| Revolving credit facilities borrowings | 349,600 | 499,300 |
| Revolving credit facilities repayments | (501,200) | (456,900) |
| Long-term borrowings | 2,308,600 | 285,000 |
| Repayment of long-term debt | (2,168,600) | (80,000) |
| Equity contribution from parent | 250,000 | — |
| Transmission interconnection and security deposit arrangements | 22,450 | 11,250 |
| Refunds paid under transmission interconnection and security deposit arrangements | (20,750) | (4,850) |
| Debt issuance costs and other, net | (11,141) | (3,468) |
| Net cash flows from financing activities | 228,959 | 250,332 |
| | | |
| **Change in Cash and Cash Equivalents** | 21,519 | 941 |
| **Cash and Cash Equivalents at Beginning of Period** | 233 | — |
| **Cash and Cash Equivalents at End of Period** | $ 21,752 | $ 941 |
| | | |
| **Supplemental Cash Flow Disclosures:** | | |
| Interest paid, net of amounts capitalized | $ 48,477 | $ 40,626 |
| Income taxes paid (refunded), net | $ 2,350 | $ 1,312 |
| | | |
| **Supplemental schedule of noncash investing activities:** | | |
| Decrease in accrued plant additions | $ 38,519 | $ 21,105 |

The accompanying notes, as they relate to TNMP, are an integral part of these condensed consolidated financial statements.

Table of Contents

**TEXAS-NEW MEXICO POWER COMPANY AND SUBSIDIARIES**
**A WHOLLY-OWNED SUBSIDIARY OF TXNM ENERGY, INC.**
**CONDENSED CONSOLIDATED BALANCE SHEETS**
(Unaudited)

| | September 30, 2025 | December 31, 2024 |
|---|---|---|
| | (In thousands) | |
| **ASSETS** | | |
| **Current Assets:** | | |
| Cash and cash equivalents | $ 21,752 | $ 233 |
| Accounts receivable | 50,984 | 34,419 |
| Unbilled revenues | 22,912 | 16,193 |
| Other receivables | 21,104 | 15,144 |
| Materials and supplies | 30,590 | 24,351 |
| Regulatory assets | — | 5,268 |
| Prepaid and other current assets | 7,543 | 4,908 |
| Total current assets | 154,885 | 100,516 |
| **Other Property and Investments:** | | |
| Other investments | — | 75 |
| Non-utility property, net | 19,139 | 13,137 |
| Total other property and investments | 19,139 | 13,212 |
| **Utility Plant:** | | |
| Plant in service and plant held for future use | 3,862,646 | 3,635,550 |
| Less accumulated depreciation and amortization | 667,789 | 616,741 |
| | 3,194,857 | 3,018,809 |
| Construction work in progress | 286,455 | 165,527 |
| Net utility plant | 3,481,312 | 3,184,336 |
| **Deferred Charges and Other Assets:** | | |
| Regulatory assets | 113,984 | 104,693 |
| Goodwill | 226,665 | 226,665 |
| Operating lease right-of-use assets, net of accumulated amortization | 191 | 923 |
| Other deferred charges | 17,265 | 18,780 |
| Total deferred charges and other assets | 358,105 | 351,061 |
| | $ 4,013,441 | $ 3,649,125 |

The accompanying notes, as they relate to TNMP, are an integral part of these condensed consolidated financial statements.

Table of Contents

**TEXAS-NEW MEXICO POWER COMPANY AND SUBSIDIARIES**
**A WHOLLY-OWNED SUBSIDIARY OF TXNM ENERGY, INC.**
**CONDENSED CONSOLIDATED BALANCE SHEETS**
(Unaudited)

| | September 30, 2025 | December 31, 2024 |
|---|---|---|
| | (In thousands, except share information) | |
| **LIABILITIES AND STOCKHOLDER'S EQUITY** | | |
| **Current Liabilities:** | | |
| Short-term debt | $ — | $ 151,600 |
| Accounts payable | 32,582 | 67,116 |
| Affiliate payables | 6,316 | 7,339 |
| Accrued interest and taxes | 62,498 | 56,740 |
| Regulatory liabilities | 2,556 | 602 |
| Operating lease liabilities | 162 | 713 |
| Other current liabilities | 18,186 | 6,964 |
| Total current liabilities | 122,300 | 291,074 |
| **Long-term Debt, net of Unamortized Premiums, Discounts, and Debt Issuance Costs** | 1,602,738 | 1,464,079 |
| **Deferred Credits and Other Liabilities:** | | |
| Accumulated deferred income taxes | 222,165 | 208,107 |
| Regulatory liabilities | 260,581 | 230,037 |
| Asset retirement obligations | 1,015 | 955 |
| Accrued pension liability and postretirement benefit cost | 408 | 998 |
| Operating lease liabilities | 27 | 167 |
| Other deferred credits | 104,637 | 88,519 |
| Total deferred credits and other liabilities | 588,833 | 528,783 |
| Total liabilities | 2,313,871 | 2,283,936 |
| **Commitments and Contingencies (Note 11)** | | |
| **Common Stockholder's Equity:** | | |
| Common stock ($10 par value; 12,000,000 shares authorized; issued and outstanding 6,358 shares) | 64 | 64 |
| Paid-in-capital | 1,120,066 | 870,066 |
| Retained earnings | 579,440 | 495,059 |
| Total common stockholder's equity | 1,699,570 | 1,365,189 |
| | $ 4,013,441 | $ 3,649,125 |

The accompanying notes, as they relate to TNMP, are an integral part of these condensed consolidated financial statements.

Table of Contents

**TEXAS-NEW MEXICO POWER COMPANY AND SUBSIDIARIES**
**A WHOLLY-OWNED SUBSIDIARY OF TXNM ENERGY, INC.**
**CONDENSED CONSOLIDATED STATEMENTS OF CHANGES IN COMMON STOCKHOLDER'S EQUITY**
(Unaudited)

| | Common Stock | Paid-in Capital | Retained Earnings | Total Common Stockholder's Equity |
|---|---|---|---|---|
| | | (In thousands) | | |
| **Balance at June 30, 2025** | $ 64 | $ 1,120,066 | $ 538,310 | $ 1,658,440 |
| Net earnings | — | — | 41,130 | 41,130 |
| **Balance at September 30, 2025** | $ 64 | $ 1,120,066 | $ 579,440 | $ 1,699,570 |
| | | | | |
| **Balance at December 31, 2024** | $ 64 | $ 870,066 | $ 495,059 | $ 1,365,189 |
| Net earnings | — | — | 84,381 | 84,381 |
| Equity contribution from parent | — | 250,000 | — | 250,000 |
| **Balance at September 30, 2025** | $ 64 | $ 1,120,066 | $ 579,440 | $ 1,699,570 |
| | | | | |
| **Balance at June 30, 2024** | $ 64 | $ 846,066 | $ 436,039 | $ 1,282,169 |
| Net earnings | — | — | 35,695 | 35,695 |
| **Balance at September 30, 2024** | $ 64 | $ 846,066 | $ 471,734 | $ 1,317,864 |
| | | | | |
| **Balance at December 31, 2023** | $ 64 | $ 846,066 | $ 391,531 | $ 1,237,661 |
| Net earnings | — | — | 80,203 | 80,203 |
| **Balance at September 30, 2024** | $ 64 | $ 846,066 | $ 471,734 | $ 1,317,864 |

The accompanying notes, as they relate to TNMP, are an integral part of these condensed consolidated financial statements.

Table of Contents

**TXNM ENERGY, INC. AND SUBSIDIARIES**
**PUBLIC SERVICE COMPANY OF NEW MEXICO AND SUBSIDIARIES**
**TEXAS-NEW MEXICO POWER COMPANY AND SUBSIDIARIES**

**NOTES TO CONDENSED CONSOLIDATED FINANCIAL STATEMENTS**
(Unaudited)

## (1) Significant Accounting Policies and Responsibility for Financial Statements

### Financial Statement Preparation

In the opinion of management, the accompanying unaudited interim Condensed Consolidated Financial Statements reflect all normal and recurring accruals and adjustments that are necessary to present fairly the consolidated financial position at September 30, 2025 and December 31, 2024, and the consolidated results of operations, comprehensive income, and cash flows for the nine months ended September 30, 2025 and 2024. The preparation of financial statements in conformity with GAAP requires management to make estimates and assumptions that affect the reported amounts of assets and liabilities, disclosure of contingent assets and liabilities at the date of the financial statements, and the reported amounts of revenues and expenses during the reporting period. Actual results could ultimately differ from those estimated. Weather causes the Company's results of operations to be seasonal in nature and the results of operations presented in the accompanying Condensed Consolidated Financial Statements are not necessarily representative of operations for an entire year.

On August 2, 2024, PNM Resources, Inc. ("PNMR") amended its Articles of Incorporation to change its name to TXNM Energy, Inc. ("TXNM") and increase the number of authorized shares of the Company's common stock from 120,000,000 to 200,000,000. The Notes to Condensed Consolidated Financial Statements include disclosures for TXNM, PNM, and TNMP. This report uses the term "Company" when discussing matters of common applicability to TXNM, PNM, and TNMP. Discussions regarding only TXNM, PNM, or TNMP are so indicated.

On May 18, 2025, TXNM, Parent, and Merger Sub, entered into the Merger Agreement, pursuant to which Merger Sub will merge with and into TXNM, with TXNM surviving the Merger as a direct, wholly-owned subsidiary of Parent. Parent and Merger Sub are affiliates of Blackstone Infrastructure. See Note 17.

These Condensed Consolidated Financial Statements are unaudited. Certain information and note disclosures normally included in the annual audited Consolidated Financial Statements have been condensed or omitted, as permitted under the applicable rules and regulations. Readers of these financial statements should refer to TXNM's, PNM's, and TNMP's audited Consolidated Financial Statements and Notes thereto that are included in their respective 2024 Annual Reports on Form 10-K.

GAAP defines subsequent events as events or transactions that occur after the balance sheet date but before financial statements are issued or are available to be issued. Based on their nature, magnitude, and timing, certain subsequent events may be required to be reflected at the balance sheet date and/or required to be disclosed in the financial statements. The Company has evaluated subsequent events accordingly.

### Principles of Consolidation

The Condensed Consolidated Financial Statements of each of TXNM, PNM, and TNMP include their accounts and those of subsidiaries in which that entity owns a majority voting interest. PNM also consolidates Valencia and ETBC I. See Note 6. PNM owns undivided interests in several jointly-owned power plants and records its pro-rata share of the assets, liabilities, and expenses for those plants. The agreements for the jointly-owned plants provide that if an owner were to default on its payment obligations, the non-defaulting owners would be responsible for their proportionate share of the obligations of the defaulting owner. In exchange, the non-defaulting owners would be entitled to their proportionate share of the generating capacity of the defaulting owner. There have been no such payment defaults under any of the agreements for the jointly-owned plants.

PNMR Services Company expenses, which represent costs that are primarily driven by corporate level activities, are charged to the business segments. These services are billed at cost and are reflected as general and administrative expenses in the business segments. Other significant intercompany transactions between TXNM, PNM, and TNMP include interest and income tax sharing payments, as well as equity transactions. See Note 15. All intercompany transactions and balances have been eliminated.

### Equity Method Investment (Previously held)

As discussed in Note 21 of the Company's 2024 Annual Reports on Form 10-K, PNMR Development and AEP OnSite Partners created NMRD in September 2017 to pursue the acquisition, development, and ownership of renewable energy generation projects, primarily in the state of New Mexico. On February 27, 2024, PNMR Development and AEP OnSite Partners sold their respective interests in NMRD. PNMR Development received net proceeds of $117.0 million and recognized an after-tax gain of $4.4 million, which was presented as cash flows from operating activities on the Condensed Consolidated Statement of Cash Flows in the nine months ended September 30, 2024. The recognition of deferred investment tax credits of

Table of Contents

**TXNM ENERGY, INC. AND SUBSIDIARIES**
**PUBLIC SERVICE COMPANY OF NEW MEXICO AND SUBSIDIARIES**
**TEXAS-NEW MEXICO POWER COMPANY AND SUBSIDIARIES**

**NOTES TO CONDENSED CONSOLIDATED FINANCIAL STATEMENTS**
(Unaudited)

$15.7 million was also recognized as an income tax benefit on the Condensed Consolidated Statement of Earnings. In the nine months ended September 30, 2024, PNMR Development and AEP OnSite Partners each made cash contributions to NMRD of $12.6 million.

**Dividends on Common Stock**

Dividends on TXNM's common stock are declared by the Board. The timing of the declaration of dividends is dependent on the timing of meetings and other actions of the Board. The Board declared dividends on common stock attributable to the second quarter of $0.4075 per share in July 2025 and $0.3875 per share in July 2024, which are reflected as being in the second quarter within the Dividends Declared per Common Share on the TXNM Condensed Consolidated Statement of Earnings. The Board declared dividends on common stock for the third quarter of $0.4075 per share in September 2025 and $0.3875 per share in September 2024, which are reflected as being in the third quarter within the Dividends Declared per Common Share on the TXNM Condensed Consolidated Statement of Earnings.

TXNM made zero and $250.0 million in cash equity contributions to TNMP in the three and nine months ended September 30, 2025. TXNM did not make any cash equity contributions to TNMP in the three and nine months ended September 30, 2024. TXNM did not make any cash equity contributions to PNM in the three and nine months ended September 30, 2025. TXNM made zero and $55.0 million in cash equity contributions to PNM in the three and nine months ended September 30, 2024. Neither PNM nor TNMP declared or paid any cash dividends on their common stock to TXNM in the three and nine months ended September 30, 2025 and 2024.

**New Accounting Pronouncements**

Information concerning recently issued accounting pronouncements that have not yet been adopted by the Company is presented below. The Company does not expect difficulty in adopting these standards by their required effective dates.

*Accounting Standards Update 2023-09 - Income Taxes (Topic 740): Improvements to Income Tax Disclosures*

In December 2023, the FASB issued ASU 2023-09 enhancing the transparency and decision usefulness of income tax disclosures. Disclosure requirements of this update include (on an annual basis) the disclosure of specific categories in the rate reconciliation and the inclusion of additional information for reconciling items that meet a quantitative threshold (if the effect of the reconciling item is equal to or greater than 5 percent of the amount computed by multiplying pre-tax income by the applicable statutory rate). The amendment also requires the disclosure (on an annual basis) of information about income taxes paid (net of refunds) including the disaggregation by federal, state, and foreign taxes as well as by individual jurisdiction. Additional requirements include the disclosure of income (loss) from continuing operations before income tax expense (benefit) disaggregated between foreign and domestic as well as income tax expense (benefit) from continuing operations disaggregated by federal, state, and foreign. ASU 2023-09 is effective for the Company for the annual reporting period beginning after December 15, 2024, with early adoption being permitted. ASU 2023-09 is to be applied on a prospective basis with retrospective application permitted. The Company expects to adopt the disclosure requirements of ASU 2023-09 with its Annual Report on Form 10-K for the year ended December 31, 2025.

*Accounting Standards Update 2024-03 - Income Statement (Subtopic 220-40): Reporting Comprehensive Income - Expense Disaggregation Disclosures*

In November 2024, the FASB issued ASU 2024-03 that will require disclosure, in the notes to the financial statements, of specified information about certain costs and expenses at each interim and annual period. Disclosures should include amounts for purchases of inventory, employee compensation, depreciation, and intangible asset amortization; certain amounts that are already required to be disclosed under GAAP in the same disclosure as other disaggregation requirements; qualitative descriptions of the amounts remaining in relevant expense categories that are not disaggregated; and the total amount of selling expenses including the entity's definition of selling expenses. In January 2025, ASU 2025-01 was issued to clarify that the amendments of ASU 2024-03 are effective for public business entities for annual reporting periods beginning after December 15, 2026 and interim reporting periods beginning after December 15, 2027. The Company expects to adopt the disclosure requirements of ASU 2024-03 with its Annual Report on Form 10-K for the year ended December 31, 2027.

*Accounting Standards Update 2025-05 – Financial Instruments – Credit Losses (Topic 326): Measurement of Credit Losses for Accounts Receivable and Contract Assets*

In July 2025, the FASB issued ASU 2025-05 that introduces a practical expedient for all entities and an accounting policy election for entities other than public business entities, related to applying Subtopic 326-20 to current accounts receivable and current contract assets arising from transactions accounted for under Topic 606. In developing a reasonable and

Table of Contents

**TXNM ENERGY, INC. AND SUBSIDIARIES**
**PUBLIC SERVICE COMPANY OF NEW MEXICO AND SUBSIDIARIES**
**TEXAS-NEW MEXICO POWER COMPANY AND SUBSIDIARIES**

**NOTES TO CONDENSED CONSOLIDATED FINANCIAL STATEMENTS**
(Unaudited)

supportable forecast as a part of estimating expected credit losses, all entities may elect a practical expedient that assumes that current conditions as of the balance sheet date do not change for the remaining life of the asset. Entities other than public business entities that elect the practical expedient are permitted to make an accounting policy election to consider collection activity after the balance sheet date when estimating expected credit losses. An entity that elects the practical expedient and the accounting policy election, if applicable, should apply the amendments in this update prospectively. The amendments in this update are effective for all entities for annual reporting periods beginning after December 15, 2025 and interim reporting periods within those annual reporting periods. Early adoption is permitted. The Company has not yet determined whether it will elect the practical expedient for estimating credit losses, however, it does not expect that this will have a material impact on its current allowance for expected credit losses.

*Accounting Standards Update 2025-06 – Intangibles – Goodwill and Other – Internal-Use Software (Subtopic 350-40): Targeted Improvements to the Accounting for Internal-Use Software*

In September 2025, the FASB issued ASU 2025-06 that updates the internal-use software guidance in subtopic 350-40 including the removal of all references to prescriptive and sequential developmental stages referred to as "project stages" throughout the subtopic. The new guidance requires an entity to start capitalizing software costs when management has authorized and committed to funding the project and it is probable that the project will be completed and used to perform the function it was intended for (referred to as the "probable-to-complete recognition threshold"). During the evaluation of the probable-to-complete recognition threshold, the entity is required to consider whether there is significant uncertainty associated with the development activities of the software. The amendments in this update are effective for all entities for annual reporting periods beginning after December 15, 2027 and interim reporting periods within those annual reporting periods. Early adoption is permitted as of the beginning of an annual reporting period. The amendments in this update permit an entity to apply the new guidance using a prospective transition approach, a modified transition approach (based on the status of a project and whether software costs were capitalized before the date of adoption), or a full retrospective transition approach. The Company has not yet determined which approach to adopt nor the impact that the new guidance will have on the accounting for its internal-use software projects.

**(2) Segment Information**

TXNM has three reportable segments, namely PNM, TNMP, and Corporate and Other. The accounting policies of the segments are the same as those described in the summary of significant accounting policies. The measure of profitability used by the CODM is Segment earnings (loss) attributable to TXNM, as presented below. The CODM uses this measure of profitability to allocate resources for each segment predominantly in the annual budget and forecasting process. The CODM considers budget to actual variances on a regular basis when making decisions about allocating capital and operational expense funding to the segments. TXNM's CODM is its current President and Chief Executive Officer ("CEO") who is also the President and CEO of the PNM segment and the CEO of the TNMP segment.

**PNM**

PNM's electric utility operations are subject to traditional rate regulation by the NMPRC. PNM provides integrated electricity services that include the generation, transmission, and distribution of electricity for retail electric customers in New Mexico; the generation and sale of electricity into the wholesale market, which includes the asset optimization of PNM's jurisdictional capacity, as well as providing transmission services to third parties. FERC has jurisdiction over wholesale power and transmission rates. PNM's operations also include the results of ETBC I since its formation in 2023.

**TNMP**

TNMP is an electric utility providing services in Texas under the TECA. TNMP's operations are subject to traditional rate regulation by the PUCT. TNMP provides transmission and distribution services at regulated rates to various REPs that, in turn, provide retail electric service to consumers within TNMP's service area. TNMP also provides transmission services at regulated rates to other utilities that interconnect with TNMP's facilities.

**Corporate and Other**

The Corporate and Other segment includes TXNM holding company activities, primarily related to corporate level debt and PNMR Services Company. The activities of PNMR Development and the equity method investment in NMRD were also included in Corporate and Other until the close of the sale of NMRD on February 27, 2024. Eliminations of intercompany transactions are reflected in the Corporate and Other segment. The following tables present summarized financial information for TXNM by segment. PNM and TNMP each operate in only one segment. Therefore, tabular segment information is not presented for PNM and TNMP.

Table of Contents

**TXNM ENERGY, INC. AND SUBSIDIARIES**
**PUBLIC SERVICE COMPANY OF NEW MEXICO AND SUBSIDIARIES**
**TEXAS-NEW MEXICO POWER COMPANY AND SUBSIDIARIES**

**NOTES TO CONDENSED CONSOLIDATED FINANCIAL STATEMENTS**
(Unaudited)

**TXNM SEGMENT INFORMATION**

| | PNM | TNMP | Corporate and Other | TXNM |
|---|---|---|---|---|
| | | (In thousands) | | |
| **Three Months Ended September 30, 2025** | | | | |
| **Electric operating revenues** | $ 463,720 | $ 183,442 | $ — | $ 647,162 |
| **Cost of energy** | | | | |
| Fuel burn | 26,312 | — | — | 26,312 |
| Purchases for resale | 119,834 | — | — | 119,834 |
| Transmission by others | 6,707 | 42,189 | — | 48,896 |
| **Significant segment expenses** | | | | |
| Administrative and general - direct | 22,764 | 969 | 36,167 | 59,900 |
| Administrative and general - corporate allocation | 30,865 | 12,136 | (43,001) | — |
| Customer related expenses | 7,792 | 753 | — | 8,545 |
| Energy production costs | 21,172 | — | — | 21,172 |
| Regulatory disallowances | (731) | — | — | (731) |
| Depreciation and amortization | 61,366 | 34,956 | 8,690 | 105,012 |
| Transmission and distribution costs | 18,127 | 9,040 | — | 27,167 |
| Taxes other than income taxes | 14,111 | 12,659 | 1,415 | 28,185 |
| **Total operating expenses** | 328,319 | 112,702 | 3,271 | 444,292 |
| Net other income and (deductions) | 17,334 | 5,623 | (425) | 22,532 |
| Interest charges | (33,805) | (24,754) | (11,590) | (70,149) |
| Income taxes (benefit) | 10,907 | 10,479 | (2,437) | 18,949 |
| Valencia non-controlling interest | (5,462) | — | — | (5,462) |
| Subsidiary preferred stock dividends | (132) | — | — | (132) |
| **Segment earnings (loss) attributable to TXNM** | $ 102,429 | $ 41,130 | $ (12,849) | $ 130,710 |
| **Nine Months Ended September 30, 2025** | | | | |
| **Electric operating revenues** | $ 1,135,472 | $ 496,902 | $ — | $ 1,632,374 |
| **Cost of energy** | | | | |
| Fuel burn | 82,780 | — | — | 82,780 |
| Purchases for resale | 305,939 | — | — | 305,939 |
| Transmission by others | 19,424 | 123,703 | — | 143,127 |
| **Significant segment expenses** | | | | |
| Administrative and general - direct | 57,233 | (948) | 123,646 | 179,931 |
| Administrative and general - corporate allocation | 98,270 | 39,621 | (137,891) | — |
| Customer related expenses | 23,054 | 2,220 | — | 25,274 |
| Energy production costs | 71,799 | — | — | 71,799 |
| Regulatory disallowances | (731) | — | — | (731) |
| Depreciation and amortization | 181,947 | 105,095 | 27,756 | 314,798 |
| Transmission and distribution costs | 49,703 | 29,430 | — | 79,133 |
| Taxes other than income taxes | 42,676 | 35,607 | 4,581 | 82,864 |
| **Total operating expenses** | 932,094 | 334,728 | 18,092 | 1,284,914 |
| Net other income and (deductions) | 47,139 | 9,723 | (2,202) | 54,660 |
| Interest charges | (95,596) | (66,018) | (44,099) | (205,713) |
| Income taxes (benefit) | 13,280 | 21,498 | (13,485) | 21,293 |
| Valencia non-controlling interest | (13,509) | — | — | (13,509) |
| Subsidiary preferred stock dividends | (396) | — | — | (396) |
| **Segment earnings (loss) attributable to TXNM** | $ 127,736 | $ 84,381 | $ (50,908) | $ 161,209 |
| **At September 30, 2025:** | | | | |
| **Total Assets** | $ 7,793,306 | $ 4,013,441 | $ 164,787 | $ 11,971,534 |
| **Goodwill** | $ 51,632 | $ 226,665 | $ — | $ 278,297 |

Table of Contents

**TXNM ENERGY, INC. AND SUBSIDIARIES**
**PUBLIC SERVICE COMPANY OF NEW MEXICO AND SUBSIDIARIES**
**TEXAS-NEW MEXICO POWER COMPANY AND SUBSIDIARIES**

**NOTES TO CONDENSED CONSOLIDATED FINANCIAL STATEMENTS**
(Unaudited)

| | PNM | TNMP | Corporate and Other | TXNM |
|---|---|---|---|---|
| | | | (In thousands) | |
| **Three Months Ended September 30, 2024** | | | | |
| **Electric operating revenues** | $ 406,519 | $ 162,737 | $ — | $ 569,256 |
| **Cost of energy** | | | | |
| Fuel burn | 28,659 | — | — | 28,659 |
| Purchases for resale | 66,396 | — | — | 66,396 |
| Transmission by others | 6,440 | 37,414 | — | 43,854 |
| **Significant segment expenses** | | | | |
| Administrative and general - direct | 18,683 | 462 | 36,880 | 56,025 |
| Administrative and general - corporate allocation | 33,095 | 13,192 | (46,287) | — |
| Customer related expenses | 8,031 | 769 | 15 | 8,815 |
| Energy production costs | 21,259 | — | — | 21,259 |
| Regulatory disallowances | 6,142 | — | — | 6,142 |
| Depreciation and amortization | 56,424 | 31,732 | 9,244 | 97,400 |
| Transmission and distribution costs | 15,123 | 8,537 | — | 23,660 |
| Taxes other than income taxes | 12,258 | 12,161 | 1,547 | 25,966 |
| **Total operating expenses** | 272,510 | 104,267 | 1,399 | 378,176 |
| Net other income | 25,970 | 2,415 | 19 | 28,404 |
| Interest charges | (27,852) | (15,924) | (15,888) | (59,664) |
| Income taxes (benefit) | 18,265 | 9,266 | (4,109) | 23,422 |
| Valencia non-controlling interest | (5,064) | — | — | (5,064) |
| Subsidiary preferred stock dividends | (132) | — | — | (132) |
| **Segment earnings (loss) attributable to TXNM** | $ 108,666 | $ 35,695 | $ (13,159) | $ 131,202 |
| **Nine Months Ended September 30, 2024** | | | | |
| **Electric operating revenues** | $ 1,048,305 | $ 445,930 | $ — | $ 1,494,235 |
| **Cost of energy** | | | | |
| Fuel burn | 107,161 | — | — | 107,161 |
| Purchases for resale | 188,912 | — | — | 188,912 |
| Transmission by others | 17,606 | 112,240 | — | 129,846 |
| **Significant segment expenses** | | | | |
| Administrative and general - direct | 43,833 | (777) | 111,374 | 154,430 |
| Administrative and general - corporate allocation | 99,525 | 40,314 | (139,839) | — |
| Customer related expenses | 23,063 | 2,260 | 95 | 25,418 |
| Energy production costs | 68,055 | — | — | 68,055 |
| Regulatory disallowances | 10,601 | — | — | 10,601 |
| Depreciation and amortization | 163,941 | 93,147 | 27,912 | 285,000 |
| Transmission and distribution costs | 44,823 | 26,652 | — | 71,475 |
| Taxes other than income taxes | 37,735 | 33,571 | 4,678 | 75,984 |
| **Total operating expenses** | 805,255 | 307,407 | 4,220 | 1,116,882 |
| Net other income and (deductions) | 59,355 | 6,292 | (15,196) | 50,451 |
| Interest charges | (78,848) | (43,711) | (46,695) | (169,254) |
| Income taxes (benefit) | 29,897 | 20,901 | (30,976) | 19,822 |
| Valencia non-controlling interest | (11,891) | — | — | (11,891) |
| Subsidiary preferred stock dividends | (396) | — | — | (396) |
| **Segment earnings (loss) attributable to TXNM** | $ 181,373 | $ 80,203 | $ (35,135) | $ 226,441 |
| **At September 30, 2024:** | | | | |
| **Total Assets** | $ 7,164,439 | $ 3,505,709 | $ 173,333 | $ 10,843,481 |
| **Goodwill** | $ 51,632 | $ 226,665 | $ — | $ 278,297 |

Table of Contents

**TXNM ENERGY, INC. AND SUBSIDIARIES**
**PUBLIC SERVICE COMPANY OF NEW MEXICO AND SUBSIDIARIES**
**TEXAS-NEW MEXICO POWER COMPANY AND SUBSIDIARIES**

**NOTES TO CONDENSED CONSOLIDATED FINANCIAL STATEMENTS**
(Unaudited)

*Significant Segment Expenses*

Reflected above are certain additional categories of operating expenses that are regularly provided to the CODM. Cost of energy consists primarily of fuel and purchase power costs for PNM and costs charged by third-party transmission providers for TNMP. Administrative and general - direct expenses are those that are incurred directly by the segment while Administrative and general - corporate allocation are those costs that are incurred by the Corporate and Other segment and allocated to the utilities based on the nature of the cost incurred. Administrative and general - corporate allocation is eliminated in the Corporate and Other segment. Customer related expenses include meter reading, customer service, and bad debt expenses.

**(3) Accumulated Other Comprehensive Income (Loss)**

Information regarding accumulated other comprehensive income (loss) for the nine months ended September 30, 2025 and 2024 is as follows:

| | Accumulated Other Comprehensive Income (Loss) | | | | |
|---|---|---|---|---|---|
| | PNM | | | Corporate and Other | TXNM |
| | Unrealized Gains on Available-for-Sale Debt Securities | Pension Liability Adjustment | Total | Fair Value Adjustment for Cash Flow Hedges | Total |
| | (In thousands) | | | | |
| **Balance at December 31, 2024** | $ 214 | $ (75,922) | $ (75,708) | $ — | $ (75,708) |
| Amounts reclassified from AOCI (pre-tax) | (611) | 4,123 | 3,512 | — | 3,512 |
| Income tax impact of amounts reclassified | 155 | (1,047) | (892) | — | (892) |
| Other OCI changes (pre-tax) | 645 | — | 645 | (1,538) | (893) |
| Income tax impact of other OCI changes | (164) | — | (164) | 391 | 227 |
| Net after-tax change | 25 | 3,076 | 3,101 | (1,147) | 1,954 |
| **Balance at September 30, 2025** | $ 239 | $ (72,846) | $ (72,607) | $ (1,147) | $ (73,754) |

| | | | | | |
|---|---|---|---|---|---|
| **Balance at December 31, 2023** | $ 10,652 | $ (77,157) | $ (66,505) | $ 3,665 | $ (62,840) |
| Amounts reclassified from AOCI (pre-tax) | (12,932) | 3,649 | (9,283) | 8,456 | (827) |
| Income tax impact of amounts reclassified | 3,285 | (927) | 2,358 | (2,148) | 210 |
| Other OCI changes (pre-tax) | 362 | — | 362 | (13,689) | (13,327) |
| Income tax impact of other OCI changes | (92) | — | (92) | 3,477 | 3,385 |
| Net after-tax change | (9,377) | 2,722 | (6,655) | (3,904) | (10,559) |
| **Balance at September 30, 2024** | $ 1,275 | $ (74,435) | $ (73,160) | $ (239) | $ (73,399) |

The Condensed Consolidated Statements of Earnings include pre-tax amounts reclassified from AOCI related to Unrealized Gains on Available-for-Sale Debt Securities in gains on investment securities and Fair Value Adjustment for Cash Flow Hedges in interest charges. The income tax impacts of all amounts reclassified from AOCI are included in income taxes in the Condensed Consolidated Statements of Earnings.

**(4) Earnings Per Share**

Basic earnings per share is computed by dividing net earnings attributable to TXNM by the weighted average number of common shares outstanding during the period. Diluted earnings per share was computed by dividing net earnings attributable to TXNM by the diluted weighted average number of common shares outstanding during the period. Diluted earnings per share reflect the potential dilution that could occur if securities or other agreements to issue common stock were

Table of Contents

**TXNM ENERGY, INC. AND SUBSIDIARIES**
**PUBLIC SERVICE COMPANY OF NEW MEXICO AND SUBSIDIARIES**
**TEXAS-NEW MEXICO POWER COMPANY AND SUBSIDIARIES**

**NOTES TO CONDENSED CONSOLIDATED FINANCIAL STATEMENTS**
(Unaudited)

settled. TXNM applies the treasury stock method for restricted stock and the unsettled shares sold under forward sale agreements pursuant to the TXNM ATM Programs. Information regarding the computation of earnings per share is as follows:

| | Three Months Ended September 30, | | Nine Months Ended September 30, | |
|---|---|---|---|---|
| | 2025 | 2024 | 2025 | 2024 |
| | (In thousands, except per share amounts) | | | |
| **Net Earnings Attributable to TXNM** | $ 130,710 | $ 131,202 | $ 161,209 | $ 226,441 |
| **Average Number of Common Shares:** | | | | |
| Outstanding during period | 107,015 | 90,200 | 98,542 | 90,200 |
| Vested awards of restricted stock | 346 | 330 | 347 | 306 |
| **Average Shares – Basic** | 107,361 | 90,530 | 98,889 | 90,506 |
| **Dilutive Effect of Common Stock Equivalents:** | | | | |
| Restricted stock | 55 | 53 | 55 | 44 |
| TXNM ATM Programs | 1 | 22 | 98 | 2 |
| **Average Shares – Diluted** | 107,417 | 90,605 | 99,042 | 90,552 |
| **Net Earnings Per Share of Common Stock:** | | | | |
| Basic | $ 1.22 | $ 1.45 | $ 1.63 | $ 2.50 |
| Diluted | $ 1.22 | $ 1.45 | $ 1.63 | $ 2.50 |

TXNM's weighted average number of common shares outstanding for the three and nine months ended September 30, 2025 was impacted by the settlement of 3.5 million shares sold and settled under the TXNM 2025 ATM Program, 1.1 million shares sold and settled under the TXNM 2024 ATM Program, and the issuance of 11.6 million shares of common stock in private placement transactions. See Note 9.

**(5) Electric Operating Revenues**

TXNM is an investor-owned holding company with two regulated utilities providing electricity and electric services in New Mexico and Texas. TXNM's electric utilities are PNM and TNMP. Additional information concerning electric operating revenue is contained in Note 4 of the Notes to Consolidated Financial Statements in the 2024 Annual Reports on Form 10-K.

**Accounts Receivable and Allowance for Credit Losses**

Accounts receivable consists primarily of trade receivables from customers. In the normal course of business, credit is extended to customers on a short-term basis. The Company estimates the allowance for credit losses on trade receivables based on historical experience and estimated default rates. Accounts receivable balances are reviewed monthly, adjustments to the allowance for credit losses are made as necessary and amounts that are deemed uncollectible are written off. In addition to the allowance for credit losses on trade receivables, the Company has evaluated other receivables for potential credit related losses. These balances include potential exposures for other non-retail utility services. In the three and nine months ended September 30, 2025 and 2024, there were no estimated credit losses related to these transactions.

**Contract Balances**

Performance obligations related to contracts with customers are typically satisfied when the energy is delivered, and the customer or end-user utilizes the energy. Accounts receivable from customers represents amounts billed, including amounts under Alternative Revenue Programs ("ARP"). For PNM, accounts receivable reflected on the Condensed Consolidated Balance Sheets, net of allowance for credit losses, includes $139.9 million at September 30, 2025 and $94.3 million at December 31, 2024 resulting from contracts with customers. All of TNMP's accounts receivable result from contracts with customers.

Contract assets are an entity's right to consideration in exchange for goods or services that the entity has transferred to a customer when that right is conditioned on something other than the passage of time (for example, the entity's future performance). Upon the completion of the Western Spirit Line, PNM entered into a TSA with Pattern Wind under an incremental tariff rate approved by FERC. The terms of the agreement provide for a financing component that benefits the customer. As such, the revenue that PNM recognizes will be in excess of the consideration received at the beginning of the service term resulting in a contract asset. The balance of the contract asset is $39.1 million at September 30, 2025 and $32.0 million at December 31, 2024. This contract asset is presented in Other deferred charges on the Condensed Consolidated Balance Sheets.

Table of Contents

**TXNM ENERGY, INC. AND SUBSIDIARIES**
**PUBLIC SERVICE COMPANY OF NEW MEXICO AND SUBSIDIARIES**
**TEXAS-NEW MEXICO POWER COMPANY AND SUBSIDIARIES**

**NOTES TO CONDENSED CONSOLIDATED FINANCIAL STATEMENTS**
(Unaudited)

**Disaggregation of Revenues**

A disaggregation of revenues from contracts with customers by the type of customer is presented in the table below.

| | PNM | TNMP | TXNM |
|---|---|---|---|
| **Three Months Ended September 30, 2025** | | (In thousands) | |
| **Electric Operating Revenues:** | | | |
| Contracts with customers: | | | |
| Retail electric revenue | | | |
| Residential | $ 187,307 | $ 77,362 | $ 264,669 |
| Commercial | 149,470 | 51,458 | 200,928 |
| Industrial | 38,725 | 17,812 | 56,537 |
| Public authority | 7,789 | 2,212 | 10,001 |
| Economy energy service | 5,772 | — | 5,772 |
| Transmission | 37,874 | 43,021 | 80,895 |
| Wholesale energy sales | 34,774 | — | 34,774 |
| Miscellaneous | 1,739 | 973 | 2,712 |
| Total revenues from contracts with customers | 463,450 | 192,838 | 656,288 |
| Alternative revenue programs | (2,236) | (9,396) | (11,632) |
| Other electric operating revenues | 2,506 | — | 2,506 |
| **Total Electric Operating Revenues** | $ 463,720 | $ 183,442 | $ 647,162 |
| **Nine Months Ended September 30, 2025** | | | |
| **Electric Operating Revenues:** | | | |
| Contracts with customers: | | | |
| Retail electric revenue | | | |
| Residential | $ 431,870 | $ 180,319 | $ 612,189 |
| Commercial | 363,468 | 142,879 | 506,347 |
| Industrial | 107,016 | 43,663 | 150,679 |
| Public authority | 18,502 | 6,194 | 24,696 |
| Economy energy service | 23,770 | — | 23,770 |
| Transmission | 109,243 | 124,519 | 233,762 |
| Wholesale energy sales | 71,598 | — | 71,598 |
| Miscellaneous | 4,600 | 2,878 | 7,478 |
| Total revenues from contracts with customers | 1,130,067 | 500,452 | 1,630,519 |
| Alternative revenue programs | 154 | (3,550) | (3,396) |
| Other electric operating revenues | 5,251 | — | 5,251 |
| **Total Electric Operating Revenues** | $ 1,135,472 | $ 496,902 | $ 1,632,374 |

Table of Contents

**TXNM ENERGY, INC. AND SUBSIDIARIES**
**PUBLIC SERVICE COMPANY OF NEW MEXICO AND SUBSIDIARIES**
**TEXAS-NEW MEXICO POWER COMPANY AND SUBSIDIARIES**

**NOTES TO CONDENSED CONSOLIDATED FINANCIAL STATEMENTS**
(Unaudited)

| | PNM | TNMP | TXNM |
|---|---|---|---|
| **Three Months Ended September 30, 2024** | | (In thousands) | |
| **Electric Operating Revenues:** | | | |
| Contracts with customers: | | | |
| Retail electric revenue | | | |
| Residential | $ 174,765 | $ 67,004 | $ 241,769 |
| Commercial | 149,245 | 45,735 | 194,980 |
| Industrial | 31,841 | 7,106 | 38,947 |
| Public authority | 7,433 | 1,920 | 9,353 |
| Economy energy service | 3,662 | — | 3,662 |
| Transmission | 35,671 | 39,195 | 74,866 |
| Wholesale energy sales | 8,311 | — | 8,311 |
| Miscellaneous | 1,511 | 916 | 2,427 |
| Total revenues from contracts with customers | 412,439 | 161,876 | 574,315 |
| Alternative revenue programs | (7,864) | 861 | (7,003) |
| Other electric operating revenues | 1,944 | — | 1,944 |
| **Total Electric Operating Revenues** | $ 406,519 | $ 162,737 | $ 569,256 |
| **Nine Months Ended September 30, 2024** | | | |
| **Electric Operating Revenues:** | | | |
| Contracts with customers: | | | |
| Retail electric revenue | | | |
| Residential | $ 416,216 | $ 155,812 | $ 572,028 |
| Commercial | 358,511 | 121,777 | 480,288 |
| Industrial | 90,811 | 24,878 | 115,689 |
| Public authority | 17,047 | 5,376 | 22,423 |
| Economy energy service | 15,257 | — | 15,257 |
| Transmission | 105,153 | 117,120 | 222,273 |
| Wholesale energy sales | 43,508 | — | 43,508 |
| Miscellaneous | 4,324 | 2,835 | 7,159 |
| Total revenues from contracts with customers | 1,050,827 | 427,798 | 1,478,625 |
| Alternative revenue programs | (5,128) | 18,132 | 13,004 |
| Other electric operating revenues | 2,606 | — | 2,606 |
| **Total Electric Operating Revenues** | $ 1,048,305 | $ 445,930 | $ 1,494,235 |

**(6) Variable Interest Entities**

How an enterprise evaluates and accounts for its involvement with variable interest entities focuses primarily on whether the enterprise has the power to direct the activities that most significantly impact the economic performance of a VIE. This evaluation requires continual reassessment of the primary beneficiary of a VIE. Additional information concerning PNM's VIEs is contained in Note 10 of the Notes to Consolidated Financial Statements in the 2024 Annual Reports on Form 10-K.

**Valencia**

PNM has a PPA to purchase all of the electric capacity and energy from Valencia, a 155 MW natural gas-fired power plant near Belen, New Mexico, through May 2028. In May 2025, the NMPRC approved a new PPA for 167 MW, through 2039, in connection with the 2028 Resource Application. A third party built, owns, and operates the facility while PNM is the sole purchaser of the electricity generated. PNM is obligated to pay fixed operation and maintenance and capacity charges in addition to variable operation and maintenance charges. For the three and nine months ended September 30, 2025, PNM paid $5.2 million and $15.1 million for fixed charges and $1.7 million and $3.1 million for variable charges. For the three and nine months ended September 30, 2024, PNM paid $5.2 million and $15.3 million for fixed charges and $1.5 million and

Table of Contents

**TXNM ENERGY, INC. AND SUBSIDIARIES**
**PUBLIC SERVICE COMPANY OF NEW MEXICO AND SUBSIDIARIES**
**TEXAS-NEW MEXICO POWER COMPANY AND SUBSIDIARIES**

**NOTES TO CONDENSED CONSOLIDATED FINANCIAL STATEMENTS**
(Unaudited)

$2.0 million for variable charges. PNM does not have any other financial obligations related to Valencia. The assets of Valencia can only be used to satisfy its obligations and creditors of Valencia do not have any recourse against PNM's assets. During the term of the original PPA, PNM has the option, under certain conditions, to purchase and own up to 50% of the plant or the VIE. The original PPA specifies that the purchase price would be the greater of 50% of book value reduced by related indebtedness or 50% of fair market value.

PNM sources fuel for the plant, controls when the facility operates through its dispatch, and receives the entire output of the plant, which factors directly and significantly impact the economic performance of Valencia. Therefore, PNM has concluded that the third-party entity that owns Valencia is a VIE and that PNM is the primary beneficiary of the entity since PNM has the power to direct the activities that most significantly impact the economic performance of Valencia and will absorb the majority of the variability in the cash flows of the plant. As the primary beneficiary, PNM consolidates Valencia in its financial statements. Accordingly, the assets, liabilities, operating expenses, and cash flows of Valencia are included in the Condensed Consolidated Financial Statements of PNM although PNM has no legal ownership interest or voting control of the VIE. The assets and liabilities of Valencia are set forth below and are not shown separately on the Condensed Consolidated Balance Sheets. The owner's equity and net income of Valencia are considered attributable to non-controlling interest.

Summarized financial information for Valencia is as follows:

**Results of Operations**

| | Three Months Ended September 30, | | Nine Months Ended September 30, | |
|---|---|---|---|---|
| | 2025 | 2024 | 2025 | 2024 |
| | (In thousands) | | | |
| Operating revenues | $ 6,825 | $ 6,659 | $ 18,173 | $ 17,324 |
| Operating expenses | 1,363 | 1,595 | 4,664 | 5,433 |
| Earnings attributable to non-controlling interest | $ 5,462 | $ 5,064 | $ 13,509 | $ 11,891 |

**Financial Position**

| | September 30, 2025 | December 31, 2024 |
|---|---|---|
| | (In thousands) | |
| Current assets | $ 3,863 | $ 3,095 |
| Net property, plant, and equipment | 42,280 | 44,411 |
| Total assets | 46,143 | 47,506 |
| Current liabilities | 836 | 606 |
| Owners' Equity – Non-controlling Interest | $ 45,307 | $ 46,900 |

**Westmoreland San Juan Mining, LLC**

As discussed in the subheading Coal Supply in Note 11, PNM and Westmoreland San Juan Mining, LLC ("WSJ LLC"), a subsidiary of Westmoreland Mining Holdings, LLC have agreements under which mine reclamation services for SJGS will be provided.

TXNM issued $30.3 million in letters of credit to facilitate the issuance of reclamation bonds. The letters of credit support results in TXNM having a variable interest in WSJ LLC since TXNM is subject to possible loss in the event performance by TXNM is required under the letters of credit support. TXNM considers the possibility of loss under the letters of credit support to be remote since the purpose of posting the bonds is to provide assurance that WSJ LLC performs the required reclamation of the mine site in accordance with applicable regulations and the reclamation services agreement provides WSJ LLC the ability to recover the cost of reclamation. As discussed in Note 11, each of the SJGS participants has established and actively fund trusts to meet future reclamation obligations.

WSJ LLC is considered a VIE. TXNM's analysis of its arrangements with WSJ LLC concluded that WSJ LLC has the ability to direct its reclamation services, which are the factors that most significantly impact the economic performance of WSJ LLC. Other than PNM being able to monitor the reclamation activities, the reclamation services were solely under the control of WSJ LLC, including developing reclamation plans, hiring personnel, and incurring operating and maintenance expenses.

Table of Contents

**TXNM ENERGY, INC. AND SUBSIDIARIES**
**PUBLIC SERVICE COMPANY OF NEW MEXICO AND SUBSIDIARIES**
**TEXAS-NEW MEXICO POWER COMPANY AND SUBSIDIARIES**

**NOTES TO CONDENSED CONSOLIDATED FINANCIAL STATEMENTS**
(Unaudited)

Neither TXNM nor PNM has any ability to direct or influence the reclamation activities. PNM's involvement through the reclamation services agreement is a protective right rather than a participating right, and WSJ LLC still has the power to direct the activities that most significantly impact the economic performance of WSJ LLC. If WSJ LLC performs reclamation services more efficiently than anticipated, its economic performance will improve. Conversely, if WSJ LLC does not perform reclamation services as efficiently as anticipated, its economic performance will be negatively impacted. Accordingly, TXNM believes WSJ LLC is the primary beneficiary and, therefore, WSJ LLC is not consolidated by either TXNM or PNM. The amounts outstanding under the letters of credit support continue to be TXNM's maximum exposure to loss from the VIE at September 30, 2025.

**ETBC I**

ETBC I is a wholly-owned, special purpose subsidiary of PNM that was formed in August 2023 for the limited purpose of purchasing, owning, and administering energy transition property, issuing securitized bonds, and performing related activities authorized by the NMPRC. On November 15, 2023, ETBC I issued the ETBC I Securitized Bonds and used the proceeds to purchase energy transition property from PNM. The energy transition property purchased includes the right to impose, bill, collect, and adjust a non-bypassable energy transition charge from all PNM retail customers until the ETBC I Securitized Bonds are paid in full and all allowed financing costs have been recovered. The ETBC I Securitized Bonds are secured by the energy transition property, and cash collections from the Energy Transition Charges are the sole source of funds to satisfy the debt obligation. The bondholders have no recourse to PNM.

PNM acts as the servicer of the energy transition property on behalf of ETBC I and is responsible for metering, calculating, billing, and collecting the Energy Transition Charges. On behalf of ETBC I, PNM is required to remit all collections of the Energy Transition Charges to the trustee for the ETBC I Securitized Bonds. PNM has the power to direct the activities that most significantly impact the economic performance of ETBC I and will absorb the majority of the variability in the cash flows of the entity. As the primary beneficiary, PNM consolidates ETBC I in its financial statements. Accordingly, the assets, liabilities, operating expenses, and cash flows of ETBC I are included in the Consolidated Financial Statements of PNM.

The following tables summarize the impact of ETBC I on PNM's Financial Statements:

| | Results of Operations | | | |
|---|---|---|---|---|
| | Three Months Ended September 30, | | Nine Months Ended September 30, | |
| | 2025 | 2024 | 2025 | 2024 |
| | (In thousands) | | | |
| Electric Operating Revenues | $ 6,766 | $ 6,336 | $ 20,174 | $ 18,092 |
| Depreciation and amortization | 1,748 | 1,232 | 5,172 | 2,874 |
| Interest Charges | 4,922 | 5,014 | 14,840 | 15,078 |
| Other | 96 | 90 | 162 | 140 |
| Net Earnings | $ — | $ — | $ — | $ — |

| | Financial Position | |
|---|---|---|
| | September 30, 2025 | December 31, 2024 |
| | (In thousands) | |
| Restricted cash (included in Other current assets) | $ 6,189 | $ 15,838 |
| Restricted cash (included in Other deferred charges) | 1,730 | 1,748 |
| Securitized Cost (included in Regulatory assets - Deferred) | 330,907 | 336,079 |
| Current installments of long-term debt | 7,303 | 6,907 |
| Accrued interest and taxes | 2,435 | 7,452 |
| Regulatory liabilities - Current | 4,161 | 6,975 |
| Long-term Debt | 324,504 | 331,726 |

Table of Contents

**TXNM ENERGY, INC. AND SUBSIDIARIES**
**PUBLIC SERVICE COMPANY OF NEW MEXICO AND SUBSIDIARIES**
**TEXAS-NEW MEXICO POWER COMPANY AND SUBSIDIARIES**

**NOTES TO CONDENSED CONSOLIDATED FINANCIAL STATEMENTS**
(Unaudited)

## (7) Fair Value of Derivative and Other Financial Instruments

Additional information concerning energy related derivative contracts and other financial instruments is contained in Note 9 of the Notes to Consolidated Financial Statements in the 2024 Annual Reports on Form 10-K.

Fair value is defined as the price that would be received for an asset or paid to transfer a liability (an exit price) in the principal or most advantageous market for the asset or liability in an orderly transaction between market participants on the measurement date. Fair value is based on current market quotes as available and is supplemented by modeling techniques and assumptions made by the Company to the extent quoted market prices or volatilities are not available. External pricing input availability varies based on commodity location, market liquidity, and term of the agreement. Valuations of derivative assets and liabilities take into account nonperformance risk, including the effect of counterparties' and the Company's credit risk. The Company regularly assesses the validity and availability of pricing data for its derivative transactions. Although the Company uses its best judgment in estimating the fair value of these instruments, there are inherent limitations in any estimation technique.

### Energy Related Derivative Contracts

**Overview**

The primary objective for the use of commodity derivative instruments, including energy contracts, options, swaps, and futures, is to manage price risk associated with forecasted purchases of energy and fuel used to generate electricity, as well as managing anticipated generation capacity in excess of forecasted demand from existing customers. PNM's energy related derivative contracts manage commodity risk. TNMP does not enter into energy related derivative contracts.

PNM enters into agreements for the purchase and sale of power from third parties. As PNM is required to meet the demand and energy needs of its customers, PNM may be exposed to market risk for the needs of its customers not covered under the FPPAC.

PNM's operations are managed primarily through a net asset-backed strategy, whereby PNM's aggregate net open forward contract position is covered by its forecasted excess generation capabilities or market purchases. PNM could be exposed to market risk if its generation capabilities were to be disrupted or if its load requirements were to be greater than anticipated. If all or a portion of load requirements were required to be covered as a result of such unexpected situations, commitments would have to be met through market purchases.

**Commodity Risk**

Marketing and procurement of energy often involve market risks associated with managing energy commodities and establishing positions in the energy markets, primarily on a short-term basis. PNM routinely enters into various derivative instruments such as forward contracts, option agreements, and price basis swap agreements to economically hedge price and volume risk on power commitments and fuel requirements and to minimize the effect of market fluctuations. PNM monitors the market risk of its commodity contracts in accordance with approved risk and credit policies.

**Accounting for Derivatives**

Under derivative accounting and related rules for energy contracts, PNM accounts for its various instruments for the purchase and sale of energy, which meet the definition of a derivative, based on PNM's intent. During the nine months ended September 30, 2025 and the year ended December 31, 2024, PNM was not hedging its exposure to the variability in future cash flows from commodity derivatives through designated cash flow hedges. The derivative contracts recorded at fair value that do not qualify or are not designated for cash flow hedge accounting are classified as economic hedges. Economic hedges are defined as derivative instruments, including long-term power agreements, used to economically hedge generation assets, purchased power and fuel costs, and customer load requirements. Changes in the fair value of economic hedges are reflected in Operating income on the Condensed Consolidated Statements of Earnings and are presented in Electric Operating Revenues and Cost of energy according to the intent of the hedge. PNM also uses such instruments under an NMPRC-approved hedging plan to manage fuel and purchased power costs related to customers covered by its FPPAC. Changes in the fair value of instruments covered by its FPPAC are recorded as Regulatory assets and Regulatory liabilities on the Condensed Consolidated Balance Sheets. The cash impacts of settled derivatives are recorded as operating activities or financing activities on the Condensed Consolidated Statement of Cash Flows consistent with the classification of the hedged transaction. PNM has no trading transactions.

Table of Contents

**TXNM ENERGY, INC. AND SUBSIDIARIES**
**PUBLIC SERVICE COMPANY OF NEW MEXICO AND SUBSIDIARIES**
**TEXAS-NEW MEXICO POWER COMPANY AND SUBSIDIARIES**

**NOTES TO CONDENSED CONSOLIDATED FINANCIAL STATEMENTS**
(Unaudited)

**Commodity Derivatives**

In November 2024, February 2025, and April 2025, PNM entered into agreements to purchase a total of 250 MW from July 1, 2025 through August 31, 2025 in order to ensure that customer demand during the 2025 summer peak load period was met. In 2024, PNM had existing agreements to purchase a total of 150 MW from July 1, 2024 through July 31, 2024 and 100 MW from August 1, 2024 through August 30, 2024. All of these agreements are related to customers covered by the FPPAC and are reflected in the commodity derivative table for each of the periods presented below. PNM's commodity derivative instruments that are recorded at fair value, all of which are accounted for as economic hedges and considered Level 2 fair value measurements, are presented in the following line items on the Condensed Consolidated Balance Sheets:

| | Economic Hedges | |
|---|---|---|
| | September 30, 2025 | December 31, 2024 |
| | (In thousands) | |
| Other current assets | $ — | $ — |
| Other current liabilities | — | (5,737) |
| Net | $ — | $ (5,737) |

Certain of PNM's commodity derivative instruments in the above table are subject to master netting agreements whereby assets and liabilities could be offset in the settlement process. PNM does not offset fair value and cash collateral for derivative instruments under master netting arrangements and the above table reflects the gross amounts of fair value assets and liabilities for commodity derivatives.

At September 30, 2025 and December 31, 2024, PNM had no commodity derivative instruments, considered economic hedges, that did not pertain to the NMPRC-approved hedging plan discussed above. Changes in fair value had no impact on PNM's net earnings during the nine months ended September 30, 2025 and 2024. Commodity contract volume positions are presented in MMBTU for gas related contracts and in MWh for power related contracts. The table below presents PNM's net buy (sell) volume positions:

| | Economic Hedges | |
|---|---|---|
| | MMBTU | MWh |
| September 30, 2025 | — | — |
| December 31, 2024 | — | 89,900 |

PNM has contingent requirements to provide collateral under commodity contracts having an objectively determinable collateral provision that are in net liability positions and are not fully collateralized with cash. In connection with managing its commodity risks, PNM enters into master agreements with certain counterparties. If PNM is in a net liability position under an agreement, some agreements provide that the counterparties can request collateral if PNM's credit rating is downgraded; other agreements provide that the counterparty may request collateral to provide it with "adequate assurance" that PNM will perform; and others have no provision for collateral.

Contractual liability represents those commodity derivative contracts recorded at fair value on the balance sheet, determined on an individual contract basis without offsetting amounts for individual contracts that are in an asset position and could be offset under master netting agreements with the same counterparty. Cash collateral posted under these contracts does not reflect letters of credit under the Company's revolving credit facilities that may have been issued as collateral. Net exposure is the net contractual liability for all contracts, including those designated as normal purchase and normal sale, offset by existing collateral and by any offsets available under master netting agreements, including both assets and liability positions. At September 30, 2025 and December 31, 2024, PNM had zero and $5.7 million of contractual liability, zero posted cash collateral, and zero and $5.7 million in a net liability position.

At September 30, 2025 and December 31, 2024, PNM had no amounts recognized for the legal right to reclaim cash collateral. However, amounts posted as cash collateral under margin arrangements were zero at September 30, 2025 and $0.1 million at December 31, 2024. These amounts are included in other current assets on the Condensed Consolidated Balance Sheets. At both September 30, 2025 and December 31, 2024, there were no obligations to return cash collateral.

**Non-Derivative Financial Instruments**

The carrying amounts reflected on the Condensed Consolidated Balance Sheets approximate fair value for cash, receivables, and payables due to the short period of maturity. Investment securities are carried at fair value. Investment

Table of Contents

**TXNM ENERGY, INC. AND SUBSIDIARIES**
**PUBLIC SERVICE COMPANY OF NEW MEXICO AND SUBSIDIARIES**
**TEXAS-NEW MEXICO POWER COMPANY AND SUBSIDIARIES**

**NOTES TO CONDENSED CONSOLIDATED FINANCIAL STATEMENTS**
(Unaudited)

securities consist of PNM assets held in the NDT for its share of decommissioning costs of PVNGS, a trust for PNM's share of decommissioning costs at SJGS, and trusts for PNM's share of final reclamation costs related to the coal mines serving SJGS and Four Corners. See Note 11. At September 30, 2025 and December 31, 2024, the fair value of investment securities included $420.8 million and $384.6 million for the NDT, $2.3 million and $8.2 million for the SJGS decommissioning trust, and $70.8 million and $82.7 million for the coal mine reclamation trusts.

PNM records a realized loss as an impairment for any available-for-sale debt security that has a fair value that is less than its carrying value. At September 30, 2025 and December 31, 2024, PNM had no available-for-sale debt securities for which carrying value exceeded fair value, where the impairments were considered to be "other than temporary" and included in AOCI rather than recognized in earnings. All gains and losses resulting from sales and changes in the fair value of equity securities are recognized immediately in earnings. Gains and losses recognized on the Condensed Consolidated Statements of Earnings related to investment securities in the NDT, SJGS decommissioning, and coal mine reclamation trusts are presented in the following table:

| | Three Months Ended September 30, | | Nine Months Ended September 30, | |
|---|---|---|---|---|
| | 2025 | 2024 | 2025 | 2024 |
| | (In thousands) | | | |
| Equity securities: | | | | |
| Net gains from equity securities sold | $ 13,438 | $ 4,209 | $ 27,371 | $ 20,352 |
| Net gains (losses) on equity securities still held | (2,070) | 9,358 | 6,302 | 4,273 |
| Total net gains on equity securities | 11,368 | 13,567 | 33,673 | 24,625 |
| Available-for-sale debt securities: | | | | |
| Net gains on debt securities | 8 | 203 | 18 | 7,701 |
| Net gains on investment securities | $ 11,376 | $ 13,770 | $ 33,691 | $ 32,326 |

The proceeds and gross realized gains and losses on the disposition of securities held in the NDT, SJGS decommissioning trust, and coal mine reclamation trusts are shown in the following table. Realized gains and losses are determined by specific identification of costs of securities sold. Gross realized losses shown below exclude the (increase)/decrease in realized impairment losses of zero for the three and nine months ended September 30, 2025 and $2.0 million and $17.0 million for the three and nine months ended September 30, 2024.

| | Three Months Ended September 30, | | Nine Months Ended September 30, | |
|---|---|---|---|---|
| | 2025 | 2024 | 2025 | 2024 |
| | (In thousands) | | | |
| Proceeds from sales | $ 241,992 | $ 332,896 | $ 440,720 | $ 745,645 |
| Gross realized gains | 18,320 | 5,051 | 33,862 | 26,279 |
| Gross realized (losses) | (4,882) | (2,613) | (6,491) | (15,185) |

At September 30, 2025, the available-for-sale debt securities held by PNM, had the following final maturities:

| | Fair Value |
|---|---|
| | (In thousands) |
| Within 1 year | $ 36,561 |
| After 1 year through 5 years | 8,243 |
| | $ 44,804 |

**Fair Value Disclosures**

The Company determines the fair values of its derivative and other financial instruments based on the hierarchy that requires an entity to maximize the use of observable inputs and minimize the use of unobservable inputs when measuring fair value. There are three levels of inputs that may be used to measure fair value. Level 1 inputs are quoted prices (unadjusted) in active markets for identical assets or liabilities that the reporting entity has the ability to access at the measurement date. Level 2 inputs are inputs other than quoted prices included within Level 1 that are observable for the asset or liability, either directly or indirectly. Level 3 inputs are unobservable inputs for the asset or liability.

Table of Contents

**TXNM ENERGY, INC. AND SUBSIDIARIES**
**PUBLIC SERVICE COMPANY OF NEW MEXICO AND SUBSIDIARIES**
**TEXAS-NEW MEXICO POWER COMPANY AND SUBSIDIARIES**

**NOTES TO CONDENSED CONSOLIDATED FINANCIAL STATEMENTS**
(Unaudited)

For investment securities, Level 2 fair values are provided by fund managers utilizing a pricing service. For Level 2 fair values, the pricing provider predominantly uses the market approach using bid side market values based upon a hierarchy of information for specific securities or securities with similar characteristics. Fair values of Level 2 investments in mutual funds are equal to NAV. For commodity derivatives, Level 2 fair values are determined based on market observable inputs, which are validated using multiple broker quotes, including forward price, volatility, and interest rate curves to establish expectations of future prices. Credit valuation adjustments are made for estimated credit losses based on the overall exposure to each counterparty. For the Company's long-term debt, Level 2 fair values are provided by an external pricing service. The pricing service primarily utilizes quoted prices for similar debt in active markets when determining fair value. Management of the Company independently verifies the information provided by pricing services. Uncategorized investments include common/collective investment trusts and real estate funds which are measured at NAV at the end of each reporting period. Financial statements are received for each fund and reviewed by the Company quarterly with audited financial statements received and reviewed on an annual basis. Fair value for these funds is measured using a practical expedient provided under GAAP that allows the NAV per share to be used as fair value for investments in certain entities that do not have readily determinable fair values and are considered to be investment companies. Investments valued using this practical expedient are not required to be presented within the GAAP fair value hierarchy.

Items recorded at fair value by PNM on the Condensed Consolidated Balance Sheets are presented below by level of the fair value hierarchy along with gross unrealized gains on investments in available-for-sale debt securities:

| | | GAAP Fair Value Hierarchy | | |
|---|---|---|---|---|
| | Total | Quoted Prices in Active Markets for Identical Assets (Level 1) | Significant Other Observable Inputs (Level 2) | Unrealized Gains |
| | | (In thousands) | | |
| **September 30, 2025** | | | | |
| Cash and cash equivalents | $ 29,361 | $ 29,361 | $ — | |
| Equity securities: | | | | |
| Corporate stocks, common | 156,079 | 156,079 | — | |
| Mutual funds and other | 200,048 | 200,048 | — | |
| Available-for-sale debt securities: | | | | |
| U.S. government | 37,093 | 37,093 | — | $ 274 |
| Corporate and other | 7,711 | — | 7,711 | 84 |
| Investments categorized within the fair value hierarchy | $ 430,292 | $ 422,581 | $ 7,711 | $ 358 |
| Uncategorized collective investment trust | 44,635 | | | |
| Uncategorized real estate fund | 18,968 | | | |
| Total investment securities | $ 493,895 | | | |
| **December 31, 2024** | | | | |
| Cash and cash equivalents | $ 150,745 | $ 150,745 | $ — | |
| Equity securities: | | | | |
| Corporate stocks, common | 134,553 | 134,553 | — | |
| Mutual funds and other | 135,779 | 135,779 | — | |
| Available-for-sale debt securities: | | | | |
| U.S. government | 25,148 | 25,148 | — | $ 202 |
| Corporate and other | 7,196 | — | 7,196 | 122 |
| Investments categorized within the fair value hierarchy | $ 453,421 | $ 446,225 | $ 7,196 | $ 324 |
| Uncategorized collective investment trust | 22,103 | | | |
| Total investment securities | $ 475,524 | | | |

Table of Contents

**TXNM ENERGY, INC. AND SUBSIDIARIES**
**PUBLIC SERVICE COMPANY OF NEW MEXICO AND SUBSIDIARIES**
**TEXAS-NEW MEXICO POWER COMPANY AND SUBSIDIARIES**

**NOTES TO CONDENSED CONSOLIDATED FINANCIAL STATEMENTS**
(Unaudited)

The carrying amounts and fair values of long-term debt, all of which are considered Level 2 fair value measurements and are not recorded at fair value on the Condensed Consolidated Balance Sheets, are presented below:

| | Carrying Amount | Fair Value |
|---|---|---|
| **September 30, 2025** | (In thousands) | |
| TXNM | $ 5,082,676 | $ 5,172,203 |
| PNM | 2,941,491 | 2,847,861 |
| TNMP | 1,602,738 | 1,606,015 |
| **December 31, 2024** | | |
| TXNM | $ 4,923,368 | $ 4,706,076 |
| PNM | 2,459,592 | 2,284,362 |
| TNMP | 1,464,079 | 1,324,194 |

The carrying amount and fair value of the Company's other investments presented on the Condensed Consolidated Balance Sheets are not material and not shown in the above table.

**(8) Stock-Based Compensation**

TXNM has various stock-based compensation programs, which provide restricted stock awards, that are performance-based and time-based, under the PEP. Although certain PNM and TNMP employees are eligible to participate in the TXNM plans, PNM and TNMP do not have separate employee stock-based compensation plans. Performance stock awards granted under the PEP are awarded for a three-year, overlapping performance period. Performance stock awards with performance periods ending in 2024 and 2025 do not include market targets. Performance stock awards with performance periods ending after 2025 are subject to achieving both performance and market targets. Other awards of restricted stock are only subject to time-based vesting requirements. Additional information concerning stock-based compensation under the PEP is contained in Note 12 of the Notes to Consolidated Financial Statements in the 2024 Annual Reports on Form 10-K.

Restricted stock under the PEP refers to awards of stock subject to vesting, performance, or market conditions rather than to shares with contractual post-vesting restrictions. Generally, the awards vest ratably over three years from the grant date of the award. However, awards with performance or market conditions vest upon satisfaction of those conditions. In addition, plan provisions provide that upon retirement, participants become 100% vested in certain stock awards. The vesting period for awards of restricted stock to non-employee members of the Board is one-year.

The stock-based compensation expense related to restricted stock awards without performance or market conditions to participants that are retirement eligible on the grant date is recognized immediately at the grant date and is not amortized. Compensation expense for other such awards is amortized over the shorter of the requisite vesting period or the period until the participant becomes retirement eligible. Compensation expense for performance-based shares is recognized ratably over the performance period as required service is provided and is adjusted periodically to reflect the level of achievement expected to be attained. Compensation expense related to market-based shares is recognized ratably over the measurement period, regardless of the actual level of achievement, provided the employees meet their service requirements. At September 30, 2025, TXNM had unrecognized expense related to stock awards of $7.7 million, which is expected to be recognized over an average of 1.8 years.

The grant date fair value for restricted stock and stock awards with internal TXNM performance targets is determined based on the market price of TXNM common stock on the date of the agreements reduced by the present value of future dividends that will not be received prior to vesting. The grant date fair value is applied to the total number of shares that are anticipated to vest, although the number of performance shares that ultimately vest cannot be determined until after the performance periods end. The grant date fair value of stock awards with market targets were determined using Monte Carlo simulation models, which provide grant date fair values that include an expectation of the number of shares to vest at the end of the measurement period.

Table of Contents

**TXNM ENERGY, INC. AND SUBSIDIARIES**
**PUBLIC SERVICE COMPANY OF NEW MEXICO AND SUBSIDIARIES**
**TEXAS-NEW MEXICO POWER COMPANY AND SUBSIDIARIES**

**NOTES TO CONDENSED CONSOLIDATED FINANCIAL STATEMENTS**
(Unaudited)

The following table summarizes the weighted-average assumptions used to determine the awards grant date fair value:

| | Nine Months Ended September 30, | |
|---|---|---|
| **Restricted Shares and Performance Based Shares** | **2025** | **2024** |
| Expected quarterly dividends per share | $ 0.4075 | $ 0.3875 |
| Risk-free interest rate | 4.00 % | 4.27 % |
| **Market-Based Shares** | | |
| Dividend yield | 3.12 % | 4.21% |
| Expected volatility | 15.67 % | 13.09% |
| Risk-free interest rate | 4.12 % | 4.31% |

The following table summarizes activity in restricted stock awards, including performance-based and market-based shares for the nine months ended September 30, 2025:

| | Restricted Stock | |
|---|---|---|
| | **Shares** | **Weighted-Average Grant Date Fair Value** |
| **Outstanding at December 31, 2024** | 241,237 | $ 37.05 |
| Granted | 170,560 | 47.61 |
| Released | (160,934) | 40.81 |
| Forfeited | (5,257) | 36.08 |
| **Outstanding at September 30, 2025** | 245,606 | $ 41.94 |

Included, as granted and released, in the table above are 50,923 previously awarded performance-based shares that were earned for the 2022 - 2024 performance measurement period and ratified by the Board in February 2025 (based upon achieving targets at above “threshold,” below “target” levels). Also included, as granted and released, are 341 of other restricted stock awards for participants who retired and immediately vested. Excluded from the table above are 155,388, 242,177, and 205,478 shares for the three-year performance periods ending in 2025, 2026, and 2027 that will be awarded if all performance and market criteria are achieved at maximum levels and all executives remain eligible.

On December 4, 2023, the Company entered into a retention agreement with its President and Chief Operating Officer under which he would receive a retention bonus of $1.0 million to be paid in increments beginning in December 2023 and continuing each December until 2025. On April 8, 2024, pursuant to the retention agreement, the Board elected to convert the unvested portion of the retention bonus of $0.8 million into restricted stock rights whereby each share of restricted stock is equal to one share of Company common stock as of the first trading day after expiration of the then current black-out period. On May 3, 2024, subsequent to the expiration of the black-out period, 19,851 restricted stock rights were awarded that will vest in accordance with the original terms of the retention agreement.

On September 16, 2024, in connection with a one-time sign-on equity grant, the Company’s newly appointed General Counsel, Senior Vice President Regulatory and Public Policy, and Corporate Secretary was awarded 9,300 shares of restricted stock, of which 50% vested immediately and the remaining 50% vested on September 16, 2025.

The following table provides additional information concerning restricted stock activity, including performance-based and market-based shares:

| | Nine Months Ended September 30, | |
|---|---|---|
| **Restricted Stock** | **2025** | **2024** |
| Weighted-average grant date fair value | $ 47.61 | $ 33.51 |
| Total fair value of restricted shares that vested (in thousands) | $ 8,178 | $ 7,976 |

Table of Contents

**TXNM ENERGY, INC. AND SUBSIDIARIES**
**PUBLIC SERVICE COMPANY OF NEW MEXICO AND SUBSIDIARIES**
**TEXAS-NEW MEXICO POWER COMPANY AND SUBSIDIARIES**

**NOTES TO CONDENSED CONSOLIDATED FINANCIAL STATEMENTS**
(Unaudited)

## (9) Financing

The Company's financing strategy includes both short-term and long-term borrowings. The Company utilizes short-term revolving credit facilities, as well as cash flows from operations, to provide funds for both construction and operating expenditures. Depending on market and other conditions, the Company will periodically sell long-term debt, enter into term loan arrangements, or equity arrangements and use the proceeds to reduce borrowings under the revolving credit facilities or refinance other debt. Each of the Company's revolving credit facilities, term loans, and other debt agreements contains a single financial covenant that requires the maintenance of a debt-to-capitalization ratio. For the TXNM agreements, this ratio must be maintained at less than or equal to 70%, and for the PNM and TNMP agreements, this ratio must be maintained at less than or equal to 65%. The Company's revolving credit facilities, term loans, and other debt agreements generally also contain customary covenants, events of default, cross-default provisions, and change-of-control provisions. PNM must obtain NMPRC approval for any financing transaction having a maturity of more than 18 months. In addition, PNM files its annual informational financing filing and short-term financing plan with the NMPRC. Additional information concerning financing activities is contained in Note 7 of the Notes to Consolidated Financial Statements in the 2024 Annual Reports on Form 10-K.

On February 28, 2025, TXNM filed a shelf registration that provides for the issuance of various types of debt and equity securities. The TXNM shelf registration statement expires in February 2028.

**Financing Activities**

On August 29, 2025, TXNM paid the remaining balance due under its TXNM 2023 Term Loan in accordance with its terms, which terminated the agreement.

On August 15, 2025, TXNM entered into a distribution agreement (the "Distribution Agreement") with BofA Securities, Inc., MUFG Securities Americas Inc., RBC Capital Markets, LLC and Scotia Capital (USA) Inc., as sales agents and Bank of America, N.A., MUFG Securities EMEA plc, Royal Bank of Canada and The Bank of Nova Scotia, as forward purchasers, pursuant to which the Company may sell, from time to time, up to an aggregate sales price of $200.0 million of its common stock, no par value, through the sales agents (the "TXNM 2025 ATM Program"). Sales of the shares made pursuant to the Distribution Agreement, if any, may be made in "at the market offerings" as defined in Rule 415 of the Securities Act. TXNM did not initially receive any proceeds upon the execution of this agreement.

Beginning on August 15, 2025, TXNM sold, through the sales agents listed above, an aggregate of 3,542,377 shares of TXNM common stock as set forth in the table below and used the proceeds to repay borrowings under the TXNM Revolving Credit Facility and for other corporate purposes. Gross cash proceeds shown below were reduced by $2.0 million in issuance costs resulting in net cash proceeds of $198.0 million.

| Settlement date | Shares | Settlement price | Settlement amount |
|---|---|---|---|
| | | | (in thousands) |
| August 18, 2025 | 209,990 | $ 56.75 | $ 11,917 |
| August 19, 2025 | 18,500 | 56.83 | 1,051 |
| August 19, 2025 | 200,000 | 56.51 | 11,302 |
| August 19, 2025 | 200,000 | 56.41 | 11,282 |
| August 20, 2025 | 1,000,000 | 56.41 | 56,410 |
| August 21, 2025 | 64,016 | 56.57 | 3,621 |
| August 21, 2025 | 1,500,000 | 56.40 | 84,600 |
| August 22, 2025 | 135,327 | 56.58 | 7,657 |
| August 25, 2025 | 41,408 | 56.60 | 2,344 |
| August 25, 2025 | 118,819 | 56.73 | 6,740 |
| August 26, 2025 | 54,317 | 56.64 | 3,076 |
| | 3,542,377 | | $ 200,000 |

On July 31, 2025, PNM entered into an agreement (the "PNM July 2025 Note Purchase Agreement") with institutional investors for the sale and issuance of $350.0 million aggregate principal amount of two series of SUNs (the "PNM July 2025 SUNs") offered in private placement transactions. The PNM July 2025 SUNs were issued on July 31, 2025. PNM issued $200.0 million of the PNM July 2025 SUNs at 5.47%, due July 31, 2031, and another $150.0 million at 6.03%, due July 31, 2036. PNM used the proceeds from the PNM July 2025 SUNs to repay the PNM $250.0 million SUNs and for general corporate purposes. The PNM July 2025 Note Purchase Agreement includes the customary covenants discussed above. In the

Table of Contents

**TXNM ENERGY, INC. AND SUBSIDIARIES**
**PUBLIC SERVICE COMPANY OF NEW MEXICO AND SUBSIDIARIES**
**TEXAS-NEW MEXICO POWER COMPANY AND SUBSIDIARIES**

**NOTES TO CONDENSED CONSOLIDATED FINANCIAL STATEMENTS**
(Unaudited)

event of a change of control, PNM will be required to offer to prepay the PNM July 2025 SUNs at par. Although there are customary change of control provisions in the PNM debt agreements, the change of control provisions in the agreements, including the PNM July 2025 Note Purchase Agreement, will not be triggered by the closing of the Merger. PNM has the right to redeem any or all of the PNM July 2025 SUNs prior to their maturities, subject to payment of a customary make-whole premium.

On July 21, 2025, TNMP entered into an agreement (the "TNMP July 2025 Bond Purchase Agreement") with institutional investors for the sale of $1,084.3 million aggregate principal amount of six series of TNMP first mortgage bonds (the "TNMP July 2025 FMBs") offered in private placement transactions. TNMP issued the bonds on July 21, 2025 with the following terms:

| Principal Amount | Interest Rate | Due Date |
|---|---|---|
| (in thousands) | | |
| $ 245,000 | 4.83 % | July 31, 2030 |
| 245,000 | 5.12 | July 31, 2032 |
| 240,000 | 5.44 | July 31, 2035 |
| 100,000 | 5.54 | July 31, 2037 |
| 154,300 | 5.93 | July 31, 2045 |
| 100,000 | 6.02 | July 31, 2055 |
| $ 1,084,300 | | |

The proceeds were used to repay borrowings under the TNMP Merger Backstop Term Loan (defined below). The TNMP July 2025 FMBs are subject to continuing compliance with the representations, warranties, and covenants set forth in the governing supplemental indentures. In the event of certain changes of control of TNMP, TNMP will be required to offer to prepay the TNMP July 2025 FMBs at par. Although there are customary change of control provisions in the TNMP July 2025 FMBs, the change of control provisions will not be triggered by the closing of the Merger. TNMP has the right to redeem any or all of the TNMP July 2025 FMBs prior to their maturity, subject to payment of a customary make-whole premium.

At June 30, 2025, TXNM had a series of treasury lock agreements, with terms ranging from 5 years to 30 years, aggregating a total notional amount of $730.0 million to reduce interest rate exposure on the TNMP July 2025 FMBs that were issued in July 2025. The treasury lock agreements had an average fixed rate of 4.18% and TXNM designated them as cash flow hedges, measured at fair value, which was recorded as a loss of $2.5 million in Other current liabilities at June 30, 2025. Fair values, provided by an external pricing service, were determined using Level 2 inputs of quoted prices for similar agreements in active markets. On July 1, 2025, TXNM terminated all of the treasury lock agreements, realizing a pre-tax net loss of $1.6 million recorded in Accumulated other comprehensive income. The loss will be amortized through interest expense over a range of 5 to 30 years, in accordance with the terms of the TNMP July 2025 FMBs issued July 21, 2025.

On June 24, 2025, TXNM entered into an agreement (the "June 2025 Stock Purchase Agreement") whereby TXNM sold, in a private placement transaction, and the purchasers named therein agreed to purchase 3,615,003 shares of TXNM common stock for a purchase price of $55.325 per share (for an aggregate amount of approximately $200 million). The closing of the issuance occurred on June 27, 2025. TXNM used the proceeds to repay an equal amount under the TXNM 2023 Term Loan. TXNM granted the purchasers customary registration rights with respect to the shares, pursuant to which TXNM was required to register such shares for resale with the SEC no later than five business days after TXNM filed its Quarterly Report on Form 10-Q for the quarterly period ending June 30, 2025. On August 8, 2025, TXNM registered the shares for resale.

The documents governing an aggregate $1,505.0 million of TNMP's outstanding FMBs ("TNMP FMBs") obligated TNMP to offer ("the Offer"), within 30 business days following the signing of the Merger Agreement, to prepay the outstanding TNMP FMBs at 100% of the principal amount, plus accrued and unpaid interest thereon, but without any make-whole amount or other premium. On June 14, 2025, the Offer expired and $1,084.3 million in aggregate principal amount of the bonds were validly tendered. TNMP accepted for purchase all validly tendered bonds. On June 24, 2025, holders whose bonds were validly tendered and accepted for purchase received 100% of the aggregate principal amount of bonds prepaid plus accrued and unpaid interest using funds drawn under the TNMP Merger Backstop Term Loan, discussed below. The documents governing the TNMP FMBs currently require TNMP to make another offer, within 30 business days of closing of the Merger, to prepay the remaining outstanding TNMP FMBs, totaling $420.7 million, at par. TNMP will make such offer to prepay the TNMP FMBs in accordance with the terms of the TNMP FMBs; however, holders of the TNMP FMBs are not required to tender their TNMP FMBs and may accept or reject such offer to prepay.

Table of Contents

**TXNM ENERGY, INC. AND SUBSIDIARIES**
**PUBLIC SERVICE COMPANY OF NEW MEXICO AND SUBSIDIARIES**
**TEXAS-NEW MEXICO POWER COMPANY AND SUBSIDIARIES**

**NOTES TO CONDENSED CONSOLIDATED FINANCIAL STATEMENTS**
(Unaudited)

The information in this Form 10-Q is for informational purposes only and is neither an offer to purchase, nor a solicitation of an offer to sell, subscribe for or buy any securities in any jurisdiction pursuant to the proposed transactions or otherwise, nor shall there be any sale, issuance or transfer of securities in any jurisdiction in contravention of applicable law. Similar to the offer to prepay made after signing the Merger Agreement, the post-Merger closing offer to prepay the TNMP FMBs will be made only pursuant to an offer to prepay, which will set forth the terms and conditions of the offer to prepay.

On May 27, 2025, TXNM physically settled all shares under the TXNM 2024 ATM Program by issuing 1,104,641 shares to the forward purchasers, aggregating net proceeds of $49.6 million, including $0.5 million for equity issuance costs. TXNM used the proceeds from the settled shares to repay borrowings under the TXNM Revolving Credit Facility. Following this settlement, no additional shares of TXNM's common stock remain subject to future settlement under the TXNM 2024 ATM Program.

On May 18, 2025, the execution of the Merger Agreement constituted a "Change of Control" under certain TXNM and TNMP debt agreements. Under each of the specified debt agreements, a "Change of Control" constitutes an "Event of Default," pursuant to which the lender parties thereto had the right to accelerate the indebtedness under the debt agreements. The definition of Change of Control under the PNM debt agreements and PNM note purchase agreements are not triggered by the execution of the Merger Agreement.

On May 23, 2025, TXNM and TNMP entered into amendments in connection with the TXNM Revolving Credit Facility, TXNM 2023 Term Loan, WFB LOC Facility, and TNMP Revolving Credit Facility with the lender parties thereto (the "Lender Consents") to (i) amend the definition of "Change of Control" in such agreements such that the entry into the Merger Agreement would not constitute a Change of Control and (ii) waive the Event of Default arising from entry into the Merger Agreement. The amended Change of Control definition under the TXNM and TNMP debt agreements will, however, be triggered again upon the closing of the Merger. Prior to the closing of the Merger, the Company intends to coordinate with the lenders to either (a) seek to amend the definition of Change of Control permitting the Merger; or (b) to refinance or enter into new debt agreements that would permit the Merger. The Change of Control provisions in the PNM debt agreements are not triggered by the close of the Merger.

To ensure sufficient liquidity pending the Lender Consents, on May 18, 2025, TXNM entered into a $910.0 million, 364-day revolving credit facility (the "TXNM Merger Backstop Revolving Facility") between TXNM, the lenders party thereto, and Wells Fargo Bank, National Association, as administrative agent. The TXNM Merger Backstop Revolving Facility was available to provide liquidity in the event the Company was unable to obtain the Lender Consents. On May 19, 2025, TXNM borrowed approximately $4.0 million under the TXNM Merger Backstop Revolving Facility and subsequently repaid the entire balance by May 21, 2025. The TXNM Merger Backstop Revolving Facility expired according to its terms as TXNM did not make any additional borrowings thereunder by the commitment termination date of May 23, 2025, and the Company was able to obtain the Lender Consents.

On May 18, 2025, concurrent with the execution of the TXNM Merger Backstop Revolving Facility, TNMP entered into a $1,505.0 million, 364-day delayed-draw term loan (the "TNMP Merger Backstop Term Loan") between TNMP, the lenders party thereto, and Wells Fargo Bank, National Association, as administrative agent. The TNMP Merger Backstop Term Loan was available to provide liquidity to repurchase TNMP's FMBs that were tendered for prepayment pursuant to the Offer. On July 21, 2025, TNMP issued the TNMP July 2025 FMBs and used the proceeds to repay the outstanding principal balance under the TNMP Merger Backstop Term Loan on July 22, 2025, terminating that agreement.

On May 18, 2025, concurrent with the execution of the Merger Agreement, TXNM entered into an agreement (the "May 2025 Stock Purchase Agreement") whereby TXNM sold, in a private placement transaction, 8,000,000 shares of TXNM common stock for a purchase price of $50.00 per share (aggregating $400.0 million). The consummation of the May 2025 Stock Purchase Agreement occurred on June 2, 2025. TXNM used the proceeds to make a cash equity contribution of $160.0 million to TNMP, to repay borrowings under the TXNM Revolving Credit Facility, and for general corporate purposes.

On May 16, 2025, TXNM paid the remaining balance due under its TXNM 2021 Delayed Draw Term Loan in accordance with its terms.

On April 23, 2025, PNM entered into an agreement (the "PNM April 2025 Note Purchase Agreement") with institutional investors for the sale and issuance of $300.0 million aggregate principal amount of two series of SUNs (the "PNM April 2025 SUNs") offered in private placement transactions. The PNM April 2025 SUNs were issued on April 23, 2025. PNM issued $125.0 million of the PNM April 2025 SUNs at 5.75%, due June 1, 2032, and another $175.0 million at 6.13%, due June 1, 2037. PNM used proceeds from the PNM April 2025 SUNs for the repayment of existing indebtedness, funding of capital

Table of Contents

**TXNM ENERGY, INC. AND SUBSIDIARIES**
**PUBLIC SERVICE COMPANY OF NEW MEXICO AND SUBSIDIARIES**
**TEXAS-NEW MEXICO POWER COMPANY AND SUBSIDIARIES**

**NOTES TO CONDENSED CONSOLIDATED FINANCIAL STATEMENTS**
(Unaudited)

expenditures, and general corporate purposes. The PNM April 2025 Note Purchase Agreement includes the customary covenants discussed above. In the event of a change of control, PNM will be required to offer to prepay the PNM April 2025 SUNs at par. Although there are customary change of control provisions in the PNM debt agreements, the change of control provisions in the agreements, including the PNM April 2025 Note Purchase Agreement, are not triggered by the closing of the Merger. PNM has the right to redeem any or all of the PNM April 2025 SUNs prior to their maturities, subject to payment of a customary make-whole premium.

On February 14, 2025, TNMP entered into an agreement (the "TNMP February 2025 Bond Purchase Agreement") with institutional investors for the sale and issuance of $140.0 million aggregate principal amount of first mortgage bonds (the "TNMP February 2025 Bonds") offered in private placement transactions. TNMP issued all $140.0 million of the TNMP February 2025 Bonds on February 14, 2025 at a 5.19% interest rate, due April 1, 2031. The proceeds were used to repay borrowings under the TNMP Revolving Credit Facility, for funding of capital expenditures, and for other corporate purposes. The TNMP February 2025 Bonds are subject to continuing compliance with the representations, warranties, and covenants set forth in the supplemental indentures governing the TNMP February 2025 Bonds. The terms of the supplemental indentures governing the TNMP February 2025 Bonds include the customary covenants discussed above. In the event of a change of control, TNMP will be required to offer to prepay the TNMP February 2025 Bonds at par. The definition of change of control in the supplemental indentures governing the TNMP February 2025 Bonds were triggered by the execution of the Merger Agreement and the TNMP February 2025 Bonds were included in the Offer, with $40.0 million validly tendered by the bondholders and accepted for purchase by TNMP. The change of control for the remaining $100.0 million of TNMP February 2025 Bonds will again be triggered by the close of the Merger. TNMP has the right to redeem any or all of the TNMP February 2025 Bonds prior to their maturity, subject to payment of a customary make-whole premium.

On January 21, 2025, PNM entered into a $195.0 million term loan agreement (the "PNM 2025 Term Loan"), among PNM, the lenders party thereto and Canadian Imperial Bank of Commerce, New York Branch, as administrative agent. PNM used the proceeds of the PNM 2025 Term Loan to repay borrowings under the PNM Revolving Credit Facility and the PNM New Mexico Credit Facility, and for general corporate purposes. The PNM 2025 Term Loan bears interest at a variable rate, which was 5.14% at September 30, 2025, and must be repaid on or before July 21, 2026.

On May 6, 2024, TXNM entered into a distribution agreement with BofA Securities, Inc., Citigroup Global Markets, Inc., MUFG Securities Americas Inc., RBC Capital Markets, LLC, Scotia Capital (USA) Inc., and Wells Fargo Securities, LLC, as sales agents and Bank of America, N.A., Citibank, N.A., MUFG Securities EMEA plc, Royal Bank of Canada, The Bank of Nova Scotia, and Wells Fargo Bank, N.A., as forward purchasers, pursuant to which the Company may sell, from time to time, up to an aggregate sales amount of $100.0 million of its common stock, no par value, through the sales agents (the "TXNM 2024 ATM Program"). On August 5, 2024, subsequent to approval by shareholders to increase TXNM's authorized shares, the Company amended the distribution agreement increasing the aggregate sales amount from $100.0 million to $300.0 million of its common stock, no par value, that may be sold under the TXNM 2024 ATM Program. The Company did not initially receive any proceeds from the execution of the distribution agreement.

During the second quarter of 2024, TXNM entered into a forward sale agreement with a forward purchaser for the sale of 262,025 shares of common stock under the TXNM 2024 ATM Program (the "Q2 2024 Forward Sale Agreement") with an initial forward sale price of $37.77 per share. During the third quarter of 2024, TXNM entered into forward sale agreements with forward purchasers for the sale of 2,196,926 shares of common stock under the TXNM 2024 ATM Program (the "Q3 2024 Forward Sale Agreements", and together with the Q2 2024 Forward Sale Agreement, the "2024 Forward Sale Agreements"). The Q3 2024 Forward Sale Agreements had a weighted average initial forward sale price of $40.58 per share. TXNM physically settled these shares on December 30, 2024.

On May 10, 2024, PNM entered into a $200.0 million term loan agreement (the "PNM 2024 Term Loan"), among PNM, the lenders party thereto and U.S. Bank National Association, as administrative agent. PNM used the proceeds of the PNM 2024 Term Loan to repay borrowings under the PNM Revolving Credit Facility, the PNM New Mexico Credit Facility, and for general corporate purposes. The PNM 2024 Term Loan bears interest at a variable rate, which was 5.16% at September 30, 2025, and must be repaid on or before November 10, 2025.

On June 10, 2024, TXNM issued $500.0 million aggregate principal amount of junior subordinated convertible notes due 2054 (the "Convertible Notes") in a private offering to qualified institutional buyers pursuant to Rule 144A under the Securities Act. The Convertible Notes are unsecured obligations of the Company and rank junior and subordinate in right of payment to the prior payment in full of the Company's existing and future senior indebtedness. The Convertible Notes bear interest at a rate of 5.75% per year, payable semi-annually in arrears on June 1 and December 1, and mature on June 1, 2054, unless earlier converted, redeemed, or repurchased in accordance with their terms. On June 21, 2024, TXNM issued an

Table of Contents

**TXNM ENERGY, INC. AND SUBSIDIARIES**
**PUBLIC SERVICE COMPANY OF NEW MEXICO AND SUBSIDIARIES**
**TEXAS-NEW MEXICO POWER COMPANY AND SUBSIDIARIES**

**NOTES TO CONDENSED CONSOLIDATED FINANCIAL STATEMENTS**
(Unaudited)

additional $50.0 million aggregate principal amount of the Convertible Notes, pursuant to an overallotment option granted by TXNM to the initial purchasers of the $500.0 million Convertible Notes. Proceeds from the Convertible Notes were used to prepay $449.0 million of borrowings under the TXNM 2021 Delayed Draw Term Loan and $90.0 million of borrowings under the TXNM 2023 Term Loan, without penalty, and for other corporate purposes.

At December 31, 2023, PNM had outstanding $37.0 million of 3.00% PCRBs and $125.0 million of 1.15% PCRBs issued by the City of Farmington, New Mexico with a mandatory remarketing date of June 1, 2024 and final maturities of June 2040 and $36.0 million of 3.00% PCRBs issued by Maricopa County, Arizona with a mandatory remarketing date of June 1, 2024 and a final maturity of January 2038. On June 3, 2024, PNM remarketed these PCRBs aggregating $198.0 million to new investors at 3.875% with a mandatory tender date of June 1, 2029.

On March 28, 2024, TNMP entered into the TNMP 2024 Bond Purchase Agreement with institutional investors for the sale of $285.0 million aggregate principal amount of four series of the TNMP 2024 Bonds offered in private placement transactions. TNMP issued the first two series on March 28, 2024, consisting of $32.0 million at a 5.26% interest rate, due March 28, 2029, and $85.0 million at a 5.55% interest rate, due March 28, 2036. The third and fourth series were issued on July 1, 2024, consisting of $40.0 million at a 5.65% interest rate, due July 1, 2039, and $128.0 million at a 5.79% interest rate, due July 1, 2054. The proceeds were used to repay existing debt, including the $80.0 million of 4.03% TNMP FMBs that were due July 2024 and borrowings under the TNMP Revolving Credit Facility, for funding of capital expenditures, and for other corporate purposes. The TNMP 2024 Bonds are subject to continuing compliance with the representations, warranties, and covenants set forth in the supplemental indentures governing the TNMP 2024 Bonds. The terms of the supplemental indentures governing the TNMP 2024 Bonds include the customary covenants discussed above. In the event of certain changes of control of TXNM or TNMP, TNMP will be required to offer to prepay the TNMP 2024 Bonds at par. The definition of change of control in the supplemental indentures governing the TNMP 2024 Bonds were triggered by the execution of the Merger Agreement and the TNMP 2024 Bonds were included in the Offer, with $125.0 million validly tendered by the bondholders and accepted for purchase by TNMP. The change of control for the remaining $160.0 million of TNMP 2024 Bonds will again be triggered by the close of the Merger. TNMP has the right to redeem any or all of the TNMP 2024 Bonds prior to their maturity, subject to payment of a customary make-whole premium.

At September 30, 2025, variable interest rates were 5.16% on the PNM 2024 Term Loan that matures in November 2025 and 5.14% on the PNM 2025 Term Loan that matures in July 2026.

**Short-term Debt and Liquidity**

As of September 30, 2025, the TXNM Revolving Credit Facility had a financing capacity of $300.0 million and the PNM Revolving Credit Facility had a financing capacity of $400.0 million. Each of these facilities matures on March 30, 2029 and contains two one-year extension options that, if exercised, would extend the maturity to March 2031, subject to approval by a majority of the lenders. PNM also has the $40.0 million PNM New Mexico Credit Facility. On July 25, 2025, PNM amended its PNM New Mexico Credit Facility to, among other things, extend the maturity from May 20, 2026 to May 31, 2030. As of September 30, 2025, the TNMP Revolving Credit Facility has a capacity of $200.0 million and is secured by $200.0 million aggregate principal amount of TNMP first mortgage bonds and has a maturity of March 30, 2029, with two one-year extension options that, if exercised, would extend the maturity to March 2031, subject to approval by a majority of the lenders. Variable interest rates under the TXNM, PNM, and TNMP revolving credit facilities are based on SOFR. Short-term debt outstanding consists of:

| | September 30, 2025 | | December 31, 2024 | |
|---|---|---|---|---|
| | Balance Outstanding | Weighted Average Interest Rate | Balance Outstanding | Weighted Average Interest Rate |
| | (In thousands) | | (In thousands) | |
| PNM: | | | | |
| PNM Revolving Credit Facility | $ 118,300 | 5.49% | $ 323,800 | 5.73% |
| PNM New Mexico Credit Facility | 40,000 | 5.51 | 40,000 | 5.81 |
| | 158,300 | | 363,800 | |
| TNMP Revolving Credit Facility | — | — | 151,600 | 5.37 |
| TXNM Revolving Credit Facility | 155,500 | 5.77 | 93,900 | 5.96 |
| | $ 313,800 | | $ 609,300 | |

Table of Contents

**TXNM ENERGY, INC. AND SUBSIDIARIES**
**PUBLIC SERVICE COMPANY OF NEW MEXICO AND SUBSIDIARIES**
**TEXAS-NEW MEXICO POWER COMPANY AND SUBSIDIARIES**

**NOTES TO CONDENSED CONSOLIDATED FINANCIAL STATEMENTS**
(Unaudited)

In addition to the above borrowings, TXNM, PNM, and TNMP had letters of credit outstanding of $3.1 million, zero, and zero at September 30, 2025 that reduce the available capacity under their respective revolving credit facilities. TXNM also had $30.3 million of letters of credit outstanding under the WFB LOC Facility. The above table excludes intercompany debt. As of September 30, 2025 and December 31, 2024, neither PNM nor TNMP had any intercompany borrowings from TXNM. TXNM had $1.7 million and $1.5 million in short-term borrowings from PNMR Development at September 30, 2025 and December 31, 2024.

PNM has $3.6 million and $3.7 million in scheduled principal payments due for the ETBC I Securitized Bonds in February and August 2026. PNM also has $200.0 million under the PNM 2024 Term Loan due in November 2025, $195.0 million under the PNM 2025 Term Loan due in July 2026, and $100.3 million of 0.875% PCRBs with a mandatory tender date of October 1, 2026. The Company's debt arrangements have various maturities and expiration dates. Additional information on debt maturities is contained in Note 7 of the Notes to Consolidated Financial Statements in the 2024 Annual Reports on Form 10-K.

**(10) Pension and Other Postretirement Benefit Plans**

TXNM and its subsidiaries maintain qualified defined benefit pension plans, postretirement benefit plans providing medical and dental benefits, and executive retirement programs (collectively, the "PNM Plans" and "TNMP Plans"). TXNM maintains the legal obligation for the benefits owed to participants under these plans. The periodic costs or income of the PNM Plans and TNMP Plans are included in regulated rates to the extent attributable to regulated operations. The Company presents the service cost component of its net periodic benefit costs in administrative and general expenses and the non-service costs components in other income (deductions), net of amounts capitalized or deferred to regulatory assets and liabilities, on the Condensed Consolidated Statements of Earnings. PNM and TNMP receive a regulated return on the amounts funded for pension and OPEB plans in excess of accumulated periodic cost or income to the extent included in retail rates (a "prepaid pension asset").

Additional information concerning pension and OPEB plans is contained in Note 11 of the Notes to Consolidated Financial Statements in the 2024 Annual Reports on Form 10-K. Annual net periodic benefit cost for the plans is actuarially determined using the methods and assumptions set forth in that note and is recognized ratably throughout the year. Differences between TNMP's annual net periodic costs (income) and amounts included in its regulated rates are deferred to regulatory assets or liabilities, for recovery or refund in future rate proceedings.

**PNM Plans**

The following table presents the components of the PNM Plans' net periodic benefit cost:

| | Three Months Ended September 30, | | | | | |
|---|---|---|---|---|---|---|
| | Pension Plan | | OPEB Plan | | Executive Retirement Program | |
| | 2025 | 2024 | 2025 | 2024 | 2025 | 2024 |
| | (In thousands) | | | | | |
| **Components of Net Periodic Benefit Cost** | | | | | | |
| Service cost | $ — | $ — | $ — | $ — | $ — | $ — |
| Interest cost | 5,385 | 5,427 | 567 | 597 | 121 | 124 |
| Expected return on plan assets | (7,459) | (7,758) | (1,384) | (1,391) | — | — |
| Amortization of net loss | 3,124 | 2,661 | — | — | 47 | 50 |
| Amortization of prior service cost | — | — | — | — | — | — |
| **Net Periodic Benefit Cost (Income)** | $ 1,050 | $ 330 | $ (817) | $ (794) | $ 168 | $ 174 |

Table of Contents

**TXNM ENERGY, INC. AND SUBSIDIARIES**
**PUBLIC SERVICE COMPANY OF NEW MEXICO AND SUBSIDIARIES**
**TEXAS-NEW MEXICO POWER COMPANY AND SUBSIDIARIES**

**NOTES TO CONDENSED CONSOLIDATED FINANCIAL STATEMENTS**
(Unaudited)

| | Nine Months Ended September 30, | | | | | |
|---|---|---|---|---|---|---|
| | Pension Plan | | OPEB Plan | | Executive Retirement Program | |
| | 2025 | 2024 | 2025 | 2024 | 2025 | 2024 |
| | (In thousands) | | | | | |
| **Components of Net Periodic Benefit Cost** | | | | | | |
| Service cost | $ — | $ — | $ — | $ — | $ — | $ — |
| Interest cost | 16,154 | 16,282 | 1,700 | 1,791 | 365 | 372 |
| Expected return on plan assets | (22,375) | (23,272) | (4,152) | (4,173) | — | — |
| Amortization of net loss | 9,371 | 7,984 | — | — | 141 | 150 |
| Amortization of prior service cost | — | — | — | — | — | — |
| **Net Periodic Benefit Cost (Income)** | $ 3,150 | $ 994 | $ (2,452) | $ (2,382) | $ 506 | $ 522 |

PNM did not make any contributions to its pension plan trust in the three and nine months ended September 30, 2025 and 2024 and does not anticipate making any contributions to the pension plan in the remaining months of 2025 through 2028. PNM does expect to make a cash contribution of $7.9 million in 2029 based on current law, funding requirements, and estimates of portfolio performance. Funding assumptions were developed using a discount rate of 5.31% in 2025 declining to a rate of approximately 5.03% in 2027 and later years. Actual amounts to be funded in the future will be dependent on the actuarial assumptions at that time, including the appropriate discount rate. PNM may make additional contributions at its discretion. PNM did not make any cash contributions to the OPEB trust in the three and nine months ended September 30, 2025 and 2024, however, a portion of the disbursements attributable to the OPEB trust is paid by PNM and are therefore considered to be contributions to the OPEB plan. Payments by PNM on behalf of the PNM OPEB plan were less than $0.1 million and $0.2 million for the three and nine months ended September 30, 2025 and zero and less than $0.1 million for the three and nine months ended September 30, 2024. These payments are expected to total $2.0 million in 2025 and $11.1 million for 2026-2029. Disbursements under the executive retirement program, which are funded by PNM and considered to be contributions to the plan, were $0.4 million and $0.9 million in the three and nine months ended September 30, 2025 and $0.4 million and $0.9 million in the three and nine months ended September 30, 2024 and are expected to total $1.2 million during 2025 and $4.2 million for 2026-2029.

**TNMP Plans**

The following table presents the components of the TNMP Plans' net periodic benefit cost:

| | Three Months Ended September 30, | | | |
|---|---|---|---|---|
| | Pension Plan | | OPEB Plan | |
| | 2025 | 2024 | 2025 | 2024 |
| | (In thousands) | | | |
| **Components of Net Periodic Benefit Cost** | | | | |
| Service cost | $ — | $ — | $ 4 | $ 5 |
| Interest cost | 536 | 553 | 94 | 96 |
| Expected return on plan assets | (733) | (687) | (120) | (129) |
| Amortization of net (gain) loss | 168 | 139 | (124) | (161) |
| Amortization of prior service cost | — | — | — | — |
| **Net Periodic Benefit Cost (Income)** | $ (29) | $ 5 | $ (146) | $ (189) |

Table of Contents

**TXNM ENERGY, INC. AND SUBSIDIARIES**
**PUBLIC SERVICE COMPANY OF NEW MEXICO AND SUBSIDIARIES**
**TEXAS-NEW MEXICO POWER COMPANY AND SUBSIDIARIES**

**NOTES TO CONDENSED CONSOLIDATED FINANCIAL STATEMENTS**
(Unaudited)

| | Nine Months Ended September 30, | | | |
|---|---|---|---|---|
| | Pension Plan | | OPEB Plan | |
| | 2025 | 2024 | 2025 | 2024 |
| | (In thousands) | | | |
| **Components of Net Periodic Benefit Cost** | | | | |
| Service cost | $ — | $ — | $ 13 | $ 16 |
| Interest cost | 1,608 | 1,660 | 280 | 289 |
| Expected return on plan assets | (2,199) | (2,061) | (361) | (386) |
| Amortization of net (gain) loss | 504 | 417 | (372) | (482) |
| Amortization of prior service cost | — | — | — | — |
| **Net Periodic Benefit Cost (Income)** | $ (87) | $ 16 | $ (440) | $ (563) |

TNMP did not make any contributions to its pension plan trust in the three and nine months ended September 30, 2025 and 2024 and does not anticipate making any contributions to the pension plan in 2025 through 2029 based on current law, funding requirements, and estimates of portfolio performance. Funding assumptions were developed using a discount rate of 5.32% in 2025 declining to a rate of approximately 5.05% in 2027 and later years. Actual amounts to be funded in the future will depend on the actuarial assumptions at that time, including the appropriate discount rate. TNMP may make additional contributions at its discretion. TNMP did not make any contributions to the OPEB trust in the three and nine months ended September 30, 2025 and 2024 and does not expect to make contributions to the OPEB trust during the period 2025-2029.

**(11) Commitments and Contingencies**

**Merger-Related Litigation**

Counsel for TXNM has received a number of demand letters from certain law firms on behalf of individuals who are purported TXNM shareholders, accompanied by draft complaints naming TXNM and its directors as defendants and alleging that TXNM's preliminary proxy statement with respect to the Merger omitted or misrepresented certain material information. Such draft complaints include a request for injunctive relief with respect to the TXNM shareholder vote to approve, and the closing of, the Merger, as well as other remedies, including counsel fees. TXNM believes that the allegations set forth in the demand letters and draft complaints are without merit and, if such complaints are actually filed, will defend such actions vigorously.

***Overview***

There are various claims and lawsuits pending against the Company. In addition, the Company is subject to federal, state, and local environmental laws and regulations and periodically participates in the investigation and remediation of various sites. In addition, the Company periodically enters into financial commitments in connection with its business operations. Also, the Company is involved in various legal and regulatory proceedings in the normal course of its business. See Note 12. It is not possible at this time for the Company to determine fully the effect of all litigation and other legal and regulatory proceedings on its financial position, results of operations, or cash flows.

With respect to some of the items listed below, the Company has determined that a loss is not probable or that, to the extent probable, cannot be reasonably estimated. In some cases, the Company is not able to predict with any degree of certainty the range of possible loss that could be incurred. The Company assesses legal and regulatory matters based on current information and makes judgments concerning their potential outcome, giving due consideration to the nature of the claim, the amount and nature of any damages sought, and the probability of success. Such judgments are made with the understanding that the outcome of any litigation, investigation, or other legal proceeding is inherently uncertain. The Company records liabilities for matters where it is probable a loss has been incurred, and the amount of loss is reasonably estimatable. The actual outcomes of the items listed below could ultimately differ from the judgments made and the differences could be material. The Company cannot make any assurances that the amount of reserves or potential insurance coverage will be sufficient to cover the cash obligations that might be incurred as a result of litigation or regulatory proceedings. Except as otherwise disclosed, the Company does not expect that any known lawsuits, environmental costs, or commitments will have a material effect on its financial condition, results of operations, or cash flows.

Table of Contents

**TXNM ENERGY, INC. AND SUBSIDIARIES**
**PUBLIC SERVICE COMPANY OF NEW MEXICO AND SUBSIDIARIES**
**TEXAS-NEW MEXICO POWER COMPANY AND SUBSIDIARIES**

**NOTES TO CONDENSED CONSOLIDATED FINANCIAL STATEMENTS**
(Unaudited)

Additional information concerning commitments and contingencies is contained in Note 16 of the Notes to Consolidated Financial Statements in the 2024 Annual Reports on Form 10-K.

***Commitments and Contingencies Related to the Environment***

**Nuclear Spent Fuel and Waste Disposal**

Nuclear power plant operators are required to enter into spent fuel disposal contracts with the DOE that require the DOE to accept and dispose of all spent nuclear fuel and other high-level radioactive wastes generated by domestic power reactors. Although the Nuclear Waste Policy Act required the DOE to develop a permanent repository for the storage and disposal of spent nuclear fuel by 1998, the DOE announced that it would not be able to open the repository by 1998 and sought to excuse its performance of these requirements. In November 1997, the DC Circuit issued a decision preventing the DOE from excusing its own delay but refused to order the DOE to begin accepting spent nuclear fuel. Based on this decision and the DOE's delay, a number of utilities, including APS (on behalf of itself and the other PVNGS owners, including PNM), filed damages actions against the DOE in the Court of Federal Claims. The lawsuits filed by APS alleged that damages were incurred due to DOE's continuing failure to remove spent nuclear fuel and high-level waste from PVNGS. APS and the DOE entered into a settlement agreement, subsequently extended, that established a process for the payment of claims for costs incurred through December 31, 2025. Under the settlement agreement, APS must submit claims annually for payment of allowable costs. PNM records estimated claims on a quarterly basis. The benefit from the claims is passed through to customers under the FPPAC.

PNM estimates that it will incur approximately $55.6 million (in 2023 dollars) for its share of the costs related to the on-site interim storage of spent nuclear fuel at PVNGS for the remaining term of the operating licenses. PNM accrues these costs as a component of fuel expense as the nuclear fuel is consumed. At September 30, 2025 and December 31, 2024, PNM had a liability for interim storage costs of $15.3 million and $13.4 million, which is included in other deferred credits.

PVNGS has sufficient capacity at its on-site Independent Spent Fuel Storage Installation ("ISFSI") to store all of the nuclear fuel that will be irradiated during the initial operating license period, which ends in December 2027. Additionally, PVNGS has sufficient capacity at its on-site ISFSI to store a portion of the fuel that will be irradiated during the period of extended operation, which ends in November 2047. If uncertainties regarding the U.S. Government's obligation to accept and store spent fuel are not favorably resolved, APS will evaluate alternative storage solutions that may obviate the need to expand the ISFSI to accommodate all of the fuel that will be irradiated during the period of extended operation.

**The New Mexico Energy Transition Act**

The New Mexico Energy Transition Act ("ETA") sets a statewide standard that requires investor-owned electric utilities to have specified percentages of their electric-generating portfolios be from renewable and zero-carbon generating resources. The passage of the ETA amended the REA to require utilities operating in New Mexico to have renewable portfolios equal to 40% by 2025, 50% by 2030, 80% by 2040, and 100% zero-carbon energy by 2045. The amendments also allow for the recovery of undepreciated investments and decommissioning costs related to qualifying EGUs that the NMPRC has required be removed from retail jurisdictional rates, provided replacement resources to be included in retail rates have lower or zero-carbon emissions. The ETA requires the NMPRC to review and approve utilities' annual renewable portfolio plans to ensure compliance with the RPS. Also pursuant to the ETA, the NM Environmental Improvement Board adopted standards of performance that limit $CO_2$ emissions to no more than 1,100 lbs. per MWh beginning January 1, 2023 for new and existing coal-fired EGUs with original installed capacities exceeding 300 MW.

The ETA provides for a transition from fossil-fuel generation resources to renewable and other carbon-free resources through certain provisions relating to the abandonment of coal-fired generating facilities. These provisions include the use of energy transition bonds to finance certain costs of abandoning coal-fired facilities that are retired prior to January 1, 2023 for facilities operated by a "qualifying utility," or prior to January 1, 2032 for facilities that are not operated by a qualifying utility. The amount of energy transition bonds that can be issued to recover abandonment costs is limited to the lesser of $375.0 million or 150% of the undepreciated investment of the facility as of the abandonment date. Proceeds provided by energy transition bonds must be used only for purposes related to providing utility service to customers and to pay energy transition costs (as defined by the ETA). These costs may include plant decommissioning and coal mine reclamation costs provided those costs have not previously been recovered from customers or disallowed by the NMPRC or by a court order. Proceeds from energy transition bonds may also be used to fund severances for employees of the retired facility and related coal mine and to promote economic development, education and job training in areas impacted by the retirement of the coal-fired facilities. Energy

Table of Contents



transition bonds must be issued under a NMPRC-approved financing order, are secured by "energy transition property," are non-recourse to the issuing utility, and are repaid by a non-bypassable charge paid by all customers of the issuing utility. These customer charges are subject to an adjustment mechanism designed to provide for timely and complete payment of principal and interest due under the energy transition bonds.

The ETA also provides that utilities must obtain NMPRC approval of competitively procured replacement resources that shall be evaluated based on their cost, economic development opportunity, ability to provide jobs with comparable pay and benefits to those lost upon retirement of the facility, and that do not exceed emissions thresholds specified in the ETA. In determining whether to approve replacement resources, the NMPRC must give preference to resources with the least environmental impacts, those with higher ratios of capital costs to fuel costs, and those located in the school district of the abandoned facility. The ETA also provides for the procurement of energy storage facilities and gives utilities discretion to maintain, control, and operate these systems to ensure reliable and efficient service.

The ETA has had and will have a significant impact on PNM's future generation portfolio, including PNM's retirement of SJGS in 2022. PNM cannot predict the full impact of the ETA with respect to Four Corners or the outcome of its future generating resource abandonment and replacement resource filings with the NMPRC.

**The Clean Air Act**

*Regional Haze*

Pursuant to the CAA, states are required to establish goals for improving visibility in national parks and wilderness areas (also known as Class I areas) and to develop long-term strategies for reducing emissions of air pollutants that cause visibility impairment in their own states and for preventing degradation in other states. States must establish a series of interim goals to ensure continued progress by adopting a new SIP every ten years. In the first SIP planning period, states were required to conduct best available retrofit technology determinations for certain covered facilities, including utility boilers, built between 1962 and 1977 that have the potential to emit more than 250 tons per year of visibility impairing pollution. For all future SIP planning periods, states must evaluate whether additional emissions reduction measures may be needed to continue making reasonable progress toward natural visibility conditions.

SIPs for the second planning period were due in July 2021, which deadline NMED was unable to meet. NMED is currently preparing its SIP for the second compliance period and has notified PNM that it will not be required to submit a regional haze four-factor analysis for SJGS since PNM retired its share of SJGS in 2022. On August 30, 2022, EPA published in the Federal Register an official "Finding of Failure to Submit" for states, including New Mexico, that have not yet submitted a round 2 regional haze SIP. This action by EPA started a two-year clock for it to issue a FIP, which deadline has now passed. NMED petitioned the NM Environmental Improvement Board to adopt a proposed SIP and submitted a final revised plan to the NM Environmental Improvement Board on March 3, 2025. PNM submitted comments on the proposed SIP in response to a request for comments by NMED. The NM Environmental Improvement Board held a public hearing from April 28 to April 30, 2025 and is expected to deliberate and deliver a final rule during its regular meeting on November 21, 2025.

On March 12, 2025, as part of EPA's list of 31 deregulatory actions, EPA announced it would restructure the Regional Haze Program. On October 2, 2025, EPA published an advanced notice of proposed rulemaking to solicit information from the public to help develop regulatory changes on the implementation and structure of the Regional Haze Rule ("RHR"). The advanced notice itself does not impose any requirements but requests input on how EPA can revise the RHR to streamline regulatory requirements impacting states' visibility improvement obligations. Comments are due December 1, 2025.

*Carbon Dioxide Emissions*

In 2015, EPA established standards to limit $CO_2$ emissions from power plants, including (1) Carbon Pollution Standards for new, modified, and reconstructed power plants; and (2) the Clean Power Plan for existing power plants. Challengers successfully petitioned the U.S. Supreme Court for a stay of the Clean Power Plan. In 2019, EPA repealed the Clean Power Plan, promulgated the ACE Rule, and revised the implementing regulations for all emission guidelines. The ACE Rule was also challenged, and on January 19, 2021, the DC Circuit issued an opinion in American Lung Association and American Public Health Association v. EPA, et al., vacating the ACE Rule.

Numerous parties sought review by the U.S. Supreme Court, and on June 30, 2022, the U.S. Supreme Court held that the "generation shifting" approach in the Clean Power Plan exceeded the powers granted to EPA by Congress. Of broader significance in administrative law, the Court's opinion expressly invoked the "major question" doctrine, which requires rules

Table of Contents

**TXNM ENERGY, INC. AND SUBSIDIARIES**
**PUBLIC SERVICE COMPANY OF NEW MEXICO AND SUBSIDIARIES**
**TEXAS-NEW MEXICO POWER COMPANY AND SUBSIDIARIES**

**NOTES TO CONDENSED CONSOLIDATED FINANCIAL STATEMENTS**
(Unaudited)

involving issues of "vast economic or political significance" to be supported by clear statutory authorization. In cases where there is no clear statement of authority, courts need not defer to the agency's statutory interpretation on "major questions." The decision sets legal precedent for future rulemakings by EPA and other federal regulatory agencies whereby the agencies' authority may be limited based upon similar reasoning.

The litigation over the Carbon Pollution Standards remains held in abeyance but could be reactivated by the parties upon a determination by the court that reconsideration of the rule has concluded.

In 2024, EPA adopted regulatory actions under CAA Sections 111(b) and (d) to replace the Clean Power Plan and the ACE Rule. The final rules include revised new source performance standards under Section 111(b) for all new natural gas-fired combustion turbines and emission guidelines under Section 111(d) requiring states to develop standards of performance for GHG emissions from existing fossil-fuel-fired electric steam generating units. In the final rules, EPA determined that the standards for existing coal- or gas-fired steam generating units must be based on the use of either CCS (long-term), natural gas co-firing (medium-term), or exempt from the rule via early retirement. The standards for new combustion turbines must be based on CCS (base load), efficient simple cycle design (intermediate load), or lower-emitting fuels (low load). Over a dozen states, several industry groups and some power companies and labor unions filed challenges to the rule at the DC Circuit, which heard oral arguments on December 6, 2024. However, President Trump issued several executive orders on January 20, 2025, directing his Administration to review all agency actions and suspend, revise, or rescind those identified as imposing an undue burden on domestic energy resources. On March 12, 2025, as part of EPA's reconsideration of 31 environmental regulations, EPA announced the agency will reconsider the previous Administration's regulations on GHG standards and guidelines for power plants. On June 17, 2025, EPA published a proposed rule in the Federal Register with two alternatives to repeal or revise the GHG emission standards for EGUs. EPA primarily proposes to find that GHG emissions from fossil fuel-fired power plants "do not contribute significantly to dangerous air pollution" under the meaning of CAA Section 111, which would preclude EPA from regulating GHG emissions from those plants. As a result, EPA is proposing to repeal all GHG standards for the power sector promulgated under CAA Section 111 in both 2015 and 2024. EPA also proposed, in the alternative, to find that CCS is not adequately demonstrated and that neither CCS nor gas co-firing are the best system of emission reduction for GHG emissions from power plants, which findings also support repeal of those specific requirements from the rules adopted in 2024. Comments were due by September 15, 2025 and EPA has indicated it intends to finalize the proposed rule by the end of 2025.

Because the CAA 111 rule does not contain provisions for existing natural gas units, on March 26, 2024, EPA announced it was opening a non-regulatory docket and issued framing questions to gather input about ways to design a stronger, more durable approach to GHG regulation of existing gas combustion turbines. The docket was open for public comment from March 26, 2024 to May 28, 2024 and the agency held a policy forum to bring stakeholders together to share ideas with EPA and others. Under the Trump Administration, EPA is unlikely to propose a rule based on this non-regulatory docket.

In 2021, President Biden signed an extensive executive order aimed at addressing climate change concerns domestically and internationally. The order was intended to build on the initial climate-related actions the Biden Administration took on January 20, 2021. It addressed a wide range of issues, including establishing climate change concerns as an essential element of U.S. foreign and security policy, identifying a process to determine the U.S. INDC under the Paris Agreement, and establishing a Special Presidential Envoy for Climate that would sit on the National Security Council. On April 22, 2021, at the Earth Day Summit, as part of the U.S.'s re-entry into the Paris Agreement, President Biden unveiled the goal to cut U.S. emissions by 50% - 52% from 2005 levels by 2030, nearly double the GHG emissions reduction target set by the Obama Administration. The 2030 goal joined President Biden's other climate goals which included a carbon pollution-free power sector by 2035 and a net-zero emissions economy by no later than 2050. In an executive order issued on January 20, 2025, President Trump ordered his Administration to withdraw the U.S. from the Paris Agreement and from any agreement, pact, accord, or similar commitment made under the United Nations Framework Convention on Climate Change.

On August 1, 2025, EPA published a proposal to rescind the Agency's 2009 final rule commonly known as the Endangerment Finding. In the Endangerment Finding, EPA found that current and projected atmospheric concentrations of the well-mixed combination of six GHGs threaten public health and welfare, and that the combined emissions of these GHGs from new motor vehicles and engines contribute to the GHG pollution that threatens public health and welfare. This provided the basis for EPA's subsequent GHG regulations applicable to stationary sources. Comments were due September 15, 2025.

PNM's review of the GHG emission reductions standards that have or may occur as a result of legislation or regulation is ongoing. We are currently determining what impact, if any, the final rules will have on our business, results of operations, and financial condition.

Table of Contents

**TXNM ENERGY, INC. AND SUBSIDIARIES**
**PUBLIC SERVICE COMPANY OF NEW MEXICO AND SUBSIDIARIES**
**TEXAS-NEW MEXICO POWER COMPANY AND SUBSIDIARIES**

**NOTES TO CONDENSED CONSOLIDATED FINANCIAL STATEMENTS**
(Unaudited)

*National Ambient Air Quality Standards ("NAAQS")*

The CAA requires EPA to set NAAQS for pollutants reasonably anticipated to endanger public health or welfare. EPA has set NAAQS for certain pollutants, including NOx, $SO_2$, ozone, and particulate matter.

*NOx Standard* – In 2018, EPA published the final rule to retain the current primary health-based NOx standards of which $NO_2$ is the constituent of greatest concern and is the indicator for the primary NAAQS. EPA concluded that the current 1-hour and annual primary $NO_2$ standards are requisite to protect public health with an adequate margin of safety. The rule became effective on May 18, 2018. The State of New Mexico has attained the current NOx NAAQS standards.

*$SO_2$ Standard* – In 2019, EPA announced its final decision to retain, without changes, the primary health-based NAAQS for $SO_2$. Specifically, EPA retained the current 1-hour standard for $SO_2$, which is 75 parts per billion, based on the 3-year average of the 99th percentile of daily maximum 1-hour $SO_2$ concentrations. In 2021, EPA published in the Federal Register the initial air quality designations for all remaining areas not yet designated under the 2010 $SO_2$ Primary NAAQS. All areas of New Mexico have been designated attainment/unclassifiable through four rounds of designations by EPA.

*Ozone Standard* – In 2015, EPA finalized the new ozone NAAQS and lowered both the primary and secondary 8-hour standard from 75 to 70 parts per billion. With ozone standards becoming more stringent, fossil-fueled generation units will come under increasing pressure to reduce emissions of NOx and volatile organic compounds since these are the pollutants that form ground-level ozone. During 2017 and 2018, EPA released rules establishing area designations for ozone. In those rules, San Juan County, New Mexico, where Four Corners is located, is designated as attainment/unclassifiable and only a small area in Doña Ana County, New Mexico is designated as marginal non-attainment. Although Afton Generating Station is located in Doña Ana County, it is not located within the small area designated as non-attainment for the 2015 ozone standard.

PNM does not believe there will be material impacts to its facilities because of the non-attainment designation of the small area within Doña Ana County. Until EPA approves attainment designations for the Navajo Nation and releases a proposal to implement the revised ozone NAAQS, PNM is unable to predict what impact the adoption of these standards may have on Four Corners. On July 13, 2020, EPA proposed to retain the existing ozone NAAQS based on a review of the full body of currently available scientific evidence and exposure/risk information, but on August 21, 2023, EPA announced an entirely new review of the ozone standard. PNM cannot predict the outcome of this matter.

In 2019, EPA issued findings that several states, including New Mexico, had failed to submit interstate transport SIPs for the 2015 8-hour ozone NAAQS, triggering an obligation for EPA to issue a FIP within two years. In response, NMED submitted a Good Neighbor SIP on July 27, 2021 that demonstrates that there are no significant contributions from New Mexico to downwind problems in meeting the federal ozone standard. On March 15, 2023, EPA Administrator Regan signed a final action imposing a FIP on multiple states but did not include a FIP for New Mexico because the most updated modeling available at the time of the proposal confirmed the state did not contribute to downwind ozone nonattainment or maintenance areas. However, the updated modeling EPA used in the final rule indicated that New Mexico may be significantly contributing to one or more non-attainment or maintenance areas. In light of that modeling result, on February 16, 2024, the EPA published a proposed rule partially disapproving the SIPs for New Mexico and four other states (Arizona, Iowa, Kansas, and Tennessee) and expanding the Good Neighbor FIP to apply to these states. The FIP aspect of the proposed rule would have required fossil fuel-fired power plants in these five states to participate in an allowance-based ozone season NOx emissions trading program beginning in 2025, but the outgoing Biden Administration did not finalize the rule. On March 10, 2025, in the DC Circuit, the EPA filed a motion for voluntary remand of its ozone interstate transport FIP for the 2015 ozone NAAQS to reconsider the rule and had anticipated completing a new rulemaking by Fall 2026. The FIP is listed for reconsideration under the EPA's March 2025 list of deregulatory actions.

*PM Standard* – In 2023, EPA published, in the Federal Register, a proposal to lower the annual fine PM standard to between 9-10 µg/m3 but retain the rest of its PM standards, including the current daily fine PM standard, the daily coarse PM standard, and the secondary PM standards. The final rule was published on March 6, 2024, lowering the primary annual PM 2.5 NAAQS to 9 ug/m3, and became effective May 6, 2024. States will have until March 2032 to attain compliance with the new standard. During the multi-year implementation process, EPA will designate attainment/nonattainment areas by March 6, 2026, and states will submit a SIP to EPA by September 6, 2027. This implementation process also applies to the Albuquerque-Bernalillo County Environmental Health Department who may combine efforts with NMED. However, even before any designations are made, the new standard is effective for conducting required modeling for permit applications and revisions. The lower standard is expected to result in new nonattainment areas throughout the country and could prompt additional PM control requirements, but PNM cannot predict the impacts of the outcome of future rulemaking. The March 2024 final rule is

Table of Contents

**TXNM ENERGY, INC. AND SUBSIDIARIES**
**PUBLIC SERVICE COMPANY OF NEW MEXICO AND SUBSIDIARIES**
**TEXAS-NEW MEXICO POWER COMPANY AND SUBSIDIARIES**

**NOTES TO CONDENSED CONSOLIDATED FINANCIAL STATEMENTS**
(Unaudited)

listed for reconsideration under EPA's March 2025 list of deregulatory actions. EPA had anticipated a proposed rule in July 2025 with a final rule in January 2026.

**Cooling Water Intake Structures**

In 2014, EPA issued a rule establishing national standards for certain cooling water intake structures at existing power plants and other facilities under the Clean Water Act to protect fish and other aquatic organisms by minimizing impingement mortality (the capture of aquatic wildlife on intake structures or against screens) and entrainment mortality (the capture of fish or shellfish in water flow entering and passing through intake structures).

To minimize impingement mortality, the rule provides operators of facilities, such as Four Corners, seven options for meeting Best Technology Available ("BTA") standards for reducing impingement. The permitting authority must establish the BTA for entrainment on a site-specific basis, taking into consideration an array of factors, including endangered species and social costs and benefits. Affected sources must submit source water baseline characterization data to the permitting authority to assist in the BTA determination. Compliance deadlines under the rule are tied to permit renewals, including any subject to a schedule of compliance established by the permitting authority in the permit itself.

In 2018, several environmental groups sued EPA Region IX in the U.S. Court of Appeals for the Ninth Circuit over EPA's failure to timely reissue the Four Corners NPDES permit. The petitioners asked the court to issue a *writ of mandamus* compelling EPA Region IX to take final action on the pending NPDES permit by a reasonable date. EPA subsequently reissued the NPDES permit. The permit did not contain conditions related to the cooling water intake structure rule, because EPA determined that the facility had achieved BTA for both impingement and entrainment by operating a closed-cycle recirculation system. Several environmental groups filed a petition for review with EPA's Environmental Appeals Board ("EAB") concerning the reissued permit. The environmental groups alleged that the permit was reissued in contravention of the Clean Water Act and did not contain limits or conditions required by EPA's ELG applicable to Four Corners or EPA's cooling water intake structures rule, among others. EPA withdrew the Four Corners NPDES permit in order to examine the issues raised by the environmental groups and then issued an updated NPDES permit in 2019. The permit was once again appealed to the EAB and was stayed before the effective date, but the EAB issued an order denying the petition for review on September 30, 2020. Thereafter, the Regional Administrator of the EPA signed a notice of final permit decision, and the NPDES permit was issued on November 9, 2020. The permit became effective December 1, 2020. On January 22, 2021, the environmental groups filed a petition for review of the EAB's decision with the U.S. Court of Appeals for the Ninth Circuit. The September 2019 permit remained in effect pending the outcome of this appeal. On March 21, 2022, EPA provided notice in the Federal Register of a proposed settlement agreement with the environmental groups. The parties subsequently executed the settlement agreement as of May 2, 2022. Under the settlement, the lawsuit was administratively closed through September 6, 2023, during which time a third-party consultant spent 12 months sampling discharges from Four Corners and EPA spent three months completing an analysis. On December 1, 2023, EPA issued a modification, effective December 31, 2023, to the NPDES permit that had been issued on November 9, 2020. The modification applies to permit elements related to effluent discharge. PNM cannot predict whether the analysis required to be performed by EPA under the settlement agreement will result in further changes to the NPDES permit but does not anticipate that it will have a material impact on PNM's financial position, results of operations, or cash flows.

**Effluent Limitation Guidelines**

In 2013, EPA published proposed revised wastewater ELG establishing technology-based wastewater discharge limitations for fossil fuel-fired electric power plants. EPA signed the final Steam Electric ELG rule in 2015. The final rule, which became effective on January 4, 2016, phased in the new, more stringent requirements in the form of effluent limits for arsenic, mercury, selenium, and nitrogen for wastewater discharged from wet scrubber systems and zero discharge of pollutants in ash transport water that must be incorporated into plants' NPDES permits. The 2015 rule required each plant to comply between 2018 and 2023 depending on when it needed a new or revised NPDES permit.

The Steam Electric ELG rule was challenged in the U.S. Court of Appeals for the Fifth Circuit by numerous parties. In 2017, EPA signed a notice indicating its intent to reconsider portions of the rule, and the Fifth Circuit issued an order severing the issues under reconsideration and holding the case in abeyance as to those issues. However, the court allowed challenges to other portions of the rule to proceed. In 2019, the Fifth Circuit granted those challenges and issued an opinion vacating several portions of the rule, specifically those related to legacy wastewater and leachate, for which the court deemed the standards selected by EPA to be arbitrary and capricious.

Table of Contents

**TXNM ENERGY, INC. AND SUBSIDIARIES**
**PUBLIC SERVICE COMPANY OF NEW MEXICO AND SUBSIDIARIES**
**TEXAS-NEW MEXICO POWER COMPANY AND SUBSIDIARIES**

**NOTES TO CONDENSED CONSOLIDATED FINANCIAL STATEMENTS**
(Unaudited)

In 2017, EPA published a final rule for postponement of certain compliance dates. The rule postponed the earliest date on which compliance with the ELG for regulated waste streams would be required from November 1, 2018 until November 1, 2020. In 2019, EPA published a proposed rule revising the original ELG while maintaining the compliance dates. In 2020, EPA published in the Federal Register the final Steam Electric ELG and Standards for the Steam Electric Power Generating Point Source Category, revising the final 2015 guidelines for both flue gas desulfurization wastewater and bottom ash transport water. The 2020 rule required compliance with new limits as soon as possible on or after October 13, 2021, but no later than December 31, 2025.

In 2021, EPA published notice that it would undertake a supplemental rulemaking to revise the ELG after completing its review of the rules reconsidered in 2020. As part of this process, EPA committed to determine whether more stringent limitations and standards would be appropriate. On March 29, 2023, EPA published the proposed ELG Rule in the Federal Register. The proposed rule included stricter limitations for wastewater discharges for coal-fired facilities, but allowed for flexibilities for those coal-powered facilities that would decommission or repower by December 31, 2028, to December 31, 2032.

On May 9, 2024, EPA published a final rule to further revise the ELG. This final supplemental rule updated the technology-based limitations applicable to flue gas desulfurization wastewater, bottom ash transport water, and legacy wastewater at existing sources, as well as combustion residual leachate at new and existing sources. The 2024 rule was challenged in the U.S. Court of Appeals for the Eighth Circuit, but the court denied motions for a stay, so the rule remains in effect. On March 12, 2025, EPA announced it would reconsider the ELGs for the steam electric power generating industry. On October 2, 2025, EPA published proposed and direct final rules for extension of deadlines and other provisions. Comments are due November 3, 2025.

Reeves Station discharges cooling tower blowdown to a publicly owned treatment plant and no longer holds an NPDES permit; therefore, it is expected that no ELG requirements will be imposed.

See “Cooling Water Intake Structures” above for additional discussion of Four Corners’ current NPDES permit. Four Corners may be required to change equipment and operating practices affecting boilers and ash handling systems, as well as change its waste disposal techniques during the next NPDES permit renewal. PNM is unable to predict the outcome of these matters or a range of the potential costs of compliance.

**Santa Fe Generating Station**

PNM and NMED are parties to agreements under which PNM has installed a remediation system to treat water from a City of Santa Fe municipal supply well and an extraction well to address gasoline contamination in the groundwater at the site of PNM’s former Santa Fe Generating Station and service center. A 2008 NMED site inspection report states that neither the source nor extent of contamination at the site has been determined and that the source may not be the former Santa Fe Generating Station. During 2013 and 2014, PNM and NMED collected additional samples that showed elevated concentrations of nitrate and volatile organic compounds in some of the monitoring wells at the site. In addition, one monitoring well contained free-phase hydrocarbon products. PNM collected a sample of the product for “fingerprint” analysis. The results of this analysis indicated the product was a mixture of older and newer fuels. The presence of newer fuels in the sample suggests the hydrocarbon product likely originated from off-site sources. In 2015, PNM and NMED entered into a memorandum of understanding to address changing groundwater conditions at the site under which PNM agreed to continue hydrocarbon investigation under the supervision of NMED. Qualified costs are eligible for payment through the New Mexico Corrective Action Fund (“CAF”), which is administered by the NMED Petroleum Storage Tank Bureau. In 2019, PNM received notice from NMED that an abatement plan for the site is required to address concentrations of previously identified compounds, unrelated to those discussed above, found in the groundwater. NMED approved PNM’s abatement plan proposal, which covers field work and reporting.

Field work related to the investigation under both the CAF and abatement plan requirements was completed and activities and findings associated with the field work were presented in two separate reports and released to stakeholders in early 2020. Subsequent field work was completed in July 2020 and two reports were released supporting PNM’s contention that off-site sources have impacted, and are continuing to impact, the local groundwater in the vicinity of the former Santa Fe Generating Station.

In 2021, NMED approved both the field work plans required for site characterization and associated work activities which were completed by the end of 2022 and a report was submitted to NMED in 2023. Groundwater sampling for the abatement plan’s first semiannual work was completed in 2023, and the associated report was completed and submitted to

Table of Contents

**TXNM ENERGY, INC. AND SUBSIDIARIES**
**PUBLIC SERVICE COMPANY OF NEW MEXICO AND SUBSIDIARIES**
**TEXAS-NEW MEXICO POWER COMPANY AND SUBSIDIARIES**

**NOTES TO CONDENSED CONSOLIDATED FINANCIAL STATEMENTS**
(Unaudited)

NMED. In addition, the work plan for the 2023 CAF work was completed and submitted to NMED in July 2023. NMED approved this work plan in December 2023. The activities from the work plan include the installation of three monitoring wells which were completed in December 2024. A report summarizing the well installation is under preparation. Site wide sampling was completed in March 2025, with reports provided to NMED.

The City of Santa Fe has stopped operating its well at the site, which is needed for PNM's groundwater remediation system to operate. As a result, PNM has stopped performing remediation activities at the site. However, PNM's monitoring and other abatement activities at the site are ongoing and will continue until the groundwater meets applicable federal and state standards or until NMED determines that remediation is not required, whichever is earlier. PNM is also in communications with the City of Santa Fe to determine when operations at the site might resume. PNM is not able to assess the duration of this project or estimate the impact on its obligations if PNM is required to resume groundwater remediation activities at the site. PNM is unable to predict the outcome of these matters.

**Coal Combustion Residuals Waste Disposal**

CCRs consisting of fly ash, bottom ash, and gypsum generated from coal combustion and emission control equipment at SJGS have been disposed of in the surface mine pits adjacent to the plant. SJGS does not operate any onsite CCR impoundments or landfills. The NMMMD currently regulates mine reclamation activities at the San Juan mine, including placement of CCRs in the surface mine pits, with federal oversight by the OSM. APS disposes of CCRs in onsite ponds and dry storage areas at Four Corners. Ash management at Four Corners is regulated by EPA and the New Mexico State Engineer's Office.

EPA's 2015 coal ash rule included a non-hazardous waste determination for coal ash and sets minimum criteria for existing and new CCR landfills and surface impoundments. In 2016, the Water Infrastructure Improvements for the Nation Act (the "WIIN Act") was signed into law to address critical water infrastructure needs in the U.S. and contained a number of provisions related to CCRs. Among other things, the WIIN Act allowed, but did not require, states to develop and submit CCR permit programs for EPA approval, provided flexibility for states to incorporate EPA's 2015 rule for CCRs or develop other criteria that are at least as protective as EPA's rule, and required EPA to approve state permit programs within 180 days of submission by the state. Because states are not required to implement their own CCR permit programs, EPA was required to develop a federal permit program in states that chose not to implement a program, subject to congressional funding. Until state or federal permit programs are in effect, the 2015 rule continues to be self-implementing in nature, subject to enforcement by EPA or citizen groups. For facilities located within the boundaries of Native American reservations, such as the Navajo Nation where Four Corners is located, EPA is required to develop a federal permit program regardless of appropriated funds.

In 2018, EPA published a rule that constitutes "Phase One, Part One" of its ongoing reconsideration and revision of the 2015 CCR rule. The final Phase One, Part One rule extended the deadline to allow EGUs with unlined impoundments or that fail to meet the uppermost aquifer requirement to continue to receive coal ash until October 31, 2020, which was again extended by subsequent amendments. The rule also authorized a "Participating State Director" or EPA to approve suspension of groundwater monitoring requirements and to issue certifications related to the location restrictions, design criteria, groundwater monitoring, remedy selection and implementation. The rule also modified groundwater protection standards for certain constituents, which include cobalt, molybdenum, lithium, and lead without a maximum contamination level.

In 2019, EPA published a second round of proposed revisions, which are commonly referred to as the "Phase Two" revisions, to address reporting and accessibility to public information, "CCR piles" and "beneficial use" definitions, and the requirements for management of CCR piles. EPA reopened and extended the Phase Two comment period several times. To date, EPA has not yet finalized provisions in Phase Two related to beneficial use of CCR and CCR piles.

Since its Phase Two proposal, EPA has finalized three other rules addressing various CCR rule provisions. In 2020, EPA promulgated its proposed Holistic Approach to Closure Part A ("Part A"), which proposed a new deadline of August 31, 2020, for companies to initiate closure of unlined CCR impoundments. In accordance with the DC Circuit's vacatur of portions of the 2015 CCR Rule, Part A also changed the classification of compacted soil-lined or clay-lined surface impoundments from "lined" to "unlined", triggering closure or retrofit requirements for those impoundments. In addition, Part A delineated a process for owners/operators to submit requests for alternative closure deadlines based on lack of alternate disposal capacity and gave operators of unlined impoundments until April 11, 2021 to cease receipt of waste at these units and initiate closure.

EPA also issued the Holistic Approach to Closure Part B ("Part B") in 2020, which delineated the process for owners/operators to submit alternate liner demonstrations for clay-lined surface impoundments that could otherwise meet applicable requirements. This rule did not include beneficial use of CCR for closure, which EPA explained would be addressed in

Table of Contents

**TXNM ENERGY, INC. AND SUBSIDIARIES**
**PUBLIC SERVICE COMPANY OF NEW MEXICO AND SUBSIDIARIES**
**TEXAS-NEW MEXICO POWER COMPANY AND SUBSIDIARIES**

**NOTES TO CONDENSED CONSOLIDATED FINANCIAL STATEMENTS**
(Unaudited)

subsequent rulemaking actions. On May 18, 2023, EPA published a proposed rule on the regulatory requirements for inactive surface impoundments at inactive facilities and a new category of regulated unit called a CCR management unit ("CCRMU"), including groundwater monitoring, corrective action, closure, and post-closure care requirements for all CCR management units (regardless of how or when that CCR was placed), and several technical corrections to the existing regulations. Comments on the proposed rule were due July 17, 2023.

On May 8, 2024, EPA published a final rule that extended federal CCR regulatory requirements to (1) inactive CCR surface impoundments at inactive utilities and (2) CCRMU (Legacy Rule), including CCR impoundments and landfills that closed prior to the effective date of the 2015 CCR rule, inactive CCR landfills, and other areas where CCR was managed directly on the land. The rule became effective on November 8, 2024. EPA included deferral options for smaller CCRMU containing between one and 1,000 tons of CCR, CCRMU located beneath critical infrastructure or large buildings or structures vital to the continuation of current site activities, and CCRMU that closed prior to the effective date of the new rule (subject to certain eligibility conditions). EPA also codified the controversial definitions of infiltration and liquids that were litigated in the DC Circuit. Six petitions for review of the Legacy Rule were filed and were consolidated into one case by the DC Circuit. The Utility Solid Waste Activities Group, of which TXNM is a member, is a petitioner jointly with the National Rural Electric Cooperative Association, and American Public Power Association. The U.S. Supreme Court denied a requested stay of the rule by East Kentucky Power Cooperative. The DC Circuit has agreed to hold the case in abeyance until December 15, 2025. On July 22, 2025, EPA published a final rule and companion proposal revising the compliance deadlines for CCRMU requirements under the Legacy Rule. In September 2025, EPA withdrew the final rule due to adverse comments but anticipates a proposed rule in January 2026 with a final rule expected in October 2026.

As of the effective date of the rule, one CCRMU was identified at SJGS. SJGS is required, at a minimum, to conduct a two-part evaluation of historic and current CCRMUs with reporting due dates of February 9, 2026, and February 8, 2027 (or not later than February 8, 2027 for both under EPA's most recent regulatory actions), with each report posted to a company website by the due date.

At this time, PNM is still evaluating the financial impacts of this final regulation for Four Corners. Initial CCRMU site surveys and final site investigation reports expected to be finalized by February 2027. Based on the information available to the Company at this time, PNM cannot reasonably estimate the fair value of the entire CCRMU ARO. PNM cannot predict the outcome of the CCRMU site evaluations and investigations, or how these outcomes might affect the associated costs, which might have a material impact on PNM's operations, financial position, or cash flows.

In 2020, EPA published a proposed rule establishing a federal permitting program for the handling of CCR within the boundaries of Native American reservations and in states without their own federally authorized state programs. Permits for units within the boundaries of Native American reservations would be due 18 months after the effective date of the rule. EPA anticipates a final rule in December 2026. EPA has coordinated with the affected permits for the three facilities with CCR disposal units located on Native American lands. PNM cannot predict the outcome of EPA's rulemaking activity or the outcome of any related litigation, and whether or how such a ruling would affect operations at Four Corners.

EPA's CCR rule does not cover mine placement of coal ash. In the preamble to its 2015 rule, EPA explained that the OSM and, as necessary, EPA would address the management of CCR in mine fills in a separate regulatory action, recognizing OSM's expertise in this area. EPA's decision to defer to OSM was based on a recommendation from the National Academy of Sciences ("NAS"), which was commissioned by Congress in 2006 to investigate the health, safety and environmental risks associated with the use of CCR for mine reclamation. The NRC report recommended that enforceable federal standards be established for the disposal of CCR in mine fills to ensure that states have specific authority and that states implement adequate safeguards. In 2007, OSM published an advance notice of proposed rulemaking on the placement of CCR at mine sites. In that notice, OSM explained its intent to develop the proposed regulations based on its existing authority under the Surface Mining Control and Reclamation Act. Since 2007, however, OSM has not taken any further action to advance this rulemaking. PNM cannot predict the outcome of OSM's proposed rulemaking regarding CCR regulation, including mine placement of CCRs, or whether OSM's actions will have a material impact on PNM's operations, financial position, or cash flows.

As noted above, SJGS does not operate any onsite CCR impoundments or landfills that are regulated under the 2015 CCR rule, and as of November 8, 2024, identified only one CCRMU that would be regulated under the Legacy Rule. The CCR has since been removed from that unit and PNM will conduct the requisite site investigation reports. PNM would seek recovery from its retail customers of all CCR costs for jurisdictional assets that are ultimately incurred.

Table of Contents

**TXNM ENERGY, INC. AND SUBSIDIARIES**
**PUBLIC SERVICE COMPANY OF NEW MEXICO AND SUBSIDIARIES**
**TEXAS-NEW MEXICO POWER COMPANY AND SUBSIDIARIES**

**NOTES TO CONDENSED CONSOLIDATED FINANCIAL STATEMENTS**
(Unaudited)

Utilities that own or operate CCR disposal units, such as those at Four Corners, as indicated above, were required to collect sufficient groundwater sampling data to initiate a detection monitoring program. Four Corners completed the analysis for its CCR disposal units, which identified several units that needed corrective action or needed to cease operations and initiate closure by April 11, 2021. Work is ongoing. Four Corners continues to gather additional groundwater data and perform remedial evaluations and activities. At this time, PNM does not anticipate its share of the cost to complete these corrective actions to close the CCR disposal units, or to gather and perform remedial evaluations on groundwater at Four Corners, will have a significant impact on its operations, financial position, or cash flows.

***Other Commitments and Contingencies***

**Coal Supply**

*Four Corners*

APS purchases all of Four Corners' coal requirements from NTEC, an entity owned by the Navajo Nation, under the Four Corners CSA that expires in 2031. The coal comes from reserves located within the Navajo Nation. The contract provides for pricing adjustments over its term based on economic indices and certain minimum payments that may be required if no deliveries of coal are taken. PNM's share of the coal costs is being recovered through the FPPAC. See additional discussion of the Four Corners CSA in Note 17 of the Notes to Consolidated Financial Statements in the 2024 Annual Reports on Form 10-K.

*Coal Mine Reclamation*

As indicated under Coal Combustion Residuals Waste Disposal above, SJGS disposed of CCRs in the surface mine pits adjacent to the plant and Four Corners disposes of CCRs in ponds and dry storage areas.

PNM and the other SJGS owners are obligated to compensate WSJ LLC for all reclamation costs associated with the supply of coal from the San Juan mine. PNM and Westmoreland have entered into an agreement under which mine reclamation services for SJGS would be provided.

A mine reclamation cost study was completed in the first quarter of 2024 and PNM remeasured its liability, which resulted in an increase in overall reclamation costs of $20.9 million, due primarily to higher inflationary factors. As a result, PNM recorded the increase in the liability related to the underground mine of $17.0 million as a regulatory asset on the Condensed Consolidated Balance Sheets. Due to the NMPRC cap on the amount that can be collected from retail customers for final reclamation of the surface mines at $100.0 million, PNM was required to record $4.0 million of the increase related to the surface mine liability plus an additional $0.5 million, related to other costs, as a regulatory disallowance on the Condensed Consolidated Statements of Earnings in the three months ended March 31, 2024. In the third quarter of 2024, PNM and Westmoreland amended the mine reclamation services agreement to update the base rates for the costs of reclamation activities, which resulted in an increase in overall reclamation costs of $12.1 million. As a result, PNM recorded an additional increase in the liability related to the underground mine of $6.0 million as regulatory assets on the Condensed Consolidated Balance Sheets and the increase of $6.1 million related to the surface mine as a regulatory disallowance on the Condensed Consolidated Statements of Earnings for the three months ended September 30, 2024.

In the third quarter of 2025, PNM and Westmoreland amended the mine reclamation services agreement to update the capital recovery charges due in each year from 2025 through 2028, which resulted in an increase in overall reclamation costs. As a result on September 30, 2025, PNM recorded increases in the liabilities related to the underground mine of $0.2 million and the surface mine of $0.2 million. PNM recorded the increase in the liability related to the underground mine as a regulatory asset on the Condensed Consolidated Balance Sheets. PNM recorded the increase related to the surface mine liability as a regulatory disallowance on the Condensed Consolidated Statements of Earnings for the three and nine months ended September 30, 2025.

PNM's estimate of the costs necessary to reclaim the mine that serves SJGS is subject to many assumptions, including the timing of reclamation, generally accepted practices at the time reclamation activities occur, and current inflation and discount rates. PNM cannot predict the ultimate cost to reclaim the mine that serves SJGS and would seek to recover all costs related to reclaiming the underground mine from its customers but could be exposed to additional loss related to surface mine reclamation. In connection with certain mining permits relating to the operation of the San Juan mine, Westmoreland was required to post reclamation bonds of $118.7 million with the NMMMD. In order to facilitate the posting of reclamation bonds by sureties on behalf of Westmoreland, TXNM entered into the WFB LOC Facility under which letters of credit aggregating $30.3 million have been issued.

Table of Contents

**TXNM ENERGY, INC. AND SUBSIDIARIES**
**PUBLIC SERVICE COMPANY OF NEW MEXICO AND SUBSIDIARIES**
**TEXAS-NEW MEXICO POWER COMPANY AND SUBSIDIARIES**

**NOTES TO CONDENSED CONSOLIDATED FINANCIAL STATEMENTS**
(Unaudited)

A coal mine reclamation study for the surface mine that serves Four Corners was completed in December 2024. The study reflected operation of the mine through 2031, the term of the Four Corners CSA. PNM remeasured its liability, which resulted in a decrease in overall reclamation costs of $1.6 million, due primarily to lower overhead costs, contractor management costs, and taxes and royalties. Due to the NMPRC cap on the amount that can be collected from retail customers for final reclamation of the surface mines at $100.0 million, PNM recorded the decrease related to the surface mine liability as a regulatory disallowance on the Consolidated Statements of Earnings for the year ended December 31, 2024. In 2025, APS provided an update to the cumulative MMBTU consumption for Four Corners for the purpose of allocating final mine reclamation costs. Based on the consumption outlook, PNM's forecasted share of final reclamation costs was reduced from 9.755% to 9.096%. As a result on September 30, 2025, PNM recorded a decrease in the liability related to the surface mine of $0.9 million on the Condensed Consolidated Balance Sheets. This decrease is also recorded as a $0.9 million reduction in regulatory disallowance on the Condensed Consolidated Statements of Earnings for the three and nine months ended September 30, 2025.

Based on the most recent estimates, PNM's remaining payments as of September 30, 2025 for mine reclamation, in future dollars, are estimated to be $34.6 million for the surface mines at both SJGS and Four Corners and $63.7 million for the underground mine at SJGS. At September 30, 2025 and December 31, 2024, liabilities, in current dollars, of $24.1 million and $38.3 million for surface mine reclamation and $55.0 million and $52.9 million for underground mine reclamation were recorded in other deferred credits.

The SJGS owners are parties to a reclamation trust funds agreement to provide financial assurance for post-term coal mine reclamation obligations. The trust funds agreement requires each owner to enter into an individual trust agreement with a financial institution as trustee, create an irrevocable reclamation trust, and meet year-end funding targets set by funding curves that are approved by the SJGS ownership. PNM began using its mine reclamation trust to pay for final mine reclamation costs in April 2023. Because the trust agreement requires meeting specific funding targets at year end, it may be necessary for PNM to make additional contributions to meet those targets. PNM contributed $27.3 million in 2024. Based on PNM's reclamation trust fund balance at September 30, 2025, current forecasts, and current funding curve targets, PNM anticipates contributing $6.5 million in 2025 and does not anticipate making any contributions in 2026 or 2027.

Under the Four Corners CSA, PNM is required to fund its share of estimated final reclamation costs in annual installments into an irrevocable escrow account solely dedicated to the final reclamation cost of the surface mine at Four Corners. PNM contributed $3.2 million in 2024 and anticipates contributing $0.5 million per year for 2025, 2026 and 2027.

PNM recovers from retail customers reclamation costs associated with the underground mine. However, the NMPRC capped the amount collected from retail customers for final reclamation of the surface mines at $100.0 million for both SJGS and Four Corners. If future estimates increase the liability for surface mine reclamation, the excess would be expensed at that time. The impacts of changes in New Mexico state law as a result of the enactment of the ETA and regulatory determinations made by the NMPRC may also affect PNM's financial position, results of operations, and cash flows. PNM is currently unable to determine the outcome of these matters.

**SJGS Decommissioning**

On November 9, 2021, the San Juan County Commission approved the Coal-Fired Electricity Generating Facility Demolition and Remediation Ordinance ("Ordinance 121"), requiring the full demolition of SJGS upon its complete and permanent closure. Ordinance 121 required the SJGS owners to submit a proposed demolition and remediation plan no later than three months after SJGS was retired. The SJGS owners submitted the decommissioning and remediation plan on December 28, 2022. In connection with restructuring of the SJGS ownership on December 31, 2017, PNM and the other SJGS owners entered into the San Juan Decommissioning and Trust Funds Agreement, which requires PNM to fund its ownership share of final decommissioning costs into an irrevocable trust. Under the agreement, PNM made an initial funding of $14.7 million in December 2022 and made an additional contribution of $7.0 million in 2024. The amount and timing of additional trust funding is subject to revised decommissioning cost studies and agreement among the SJGS owners. PNM began using its decommissioning trust to pay for demolition and decommissioning costs in October 2023. PNM has posted a surety bond in the amount of $46.0 million in connection with certain environmental decommissioning obligations and must maintain the bond or other financial assurance until those obligations are satisfied. The surety bond only represents a liability if the SJGS owners fail to deliver on its contractual liability.

Table of Contents

**TXNM ENERGY, INC. AND SUBSIDIARIES**
**PUBLIC SERVICE COMPANY OF NEW MEXICO AND SUBSIDIARIES**
**TEXAS-NEW MEXICO POWER COMPANY AND SUBSIDIARIES**

**NOTES TO CONDENSED CONSOLIDATED FINANCIAL STATEMENTS**
(Unaudited)

PNM records its share of the SJGS decommissioning obligation as an ARO on its Condensed Consolidated Balance Sheets. Studies on the decommissioning costs of SJGS are performed periodically and revisions to the ARO liability are recorded. In the third quarter of 2022, a new decommissioning cost study was completed, which required PNM to remeasure its SJGS decommissioning ARO. The new study resulted in an estimated decrease to PNM's share of the decommissioning obligation of $21.1 million, which was recorded in September 2022.

On July 29, 2025 PNM received a letter from the NMED indicating that the NMED designated PNM as a responsible party and requiring a Stage 1 Abatement Plan ("S1AP") proposal for SJGS for groundwater and soil contamination associated with former operations at SJGS. NMED has approved PNM's request to delay the submission of the S1AP to November 26, 2025. PNM is currently working with experienced consultants to design and conduct site investigations and groundwater modeling to develop the S1AP. PNM is currently unable to determine the outcome of this matter.

**PVNGS Liability and Insurance Matters**

Public liability for incidents at nuclear power plants is governed by the Price-Anderson Nuclear Industries Indemnity Act, which limits the liability of nuclear reactor owners to the amount of insurance available from both commercial sources and an industry-wide retrospective payment plan. The insurance limit is subject to an adjustment every five years based upon the aggregate percentage change in the Consumer Price Index. The most recent adjustment took effect on January 1, 2024. As of that date, in accordance with this act, the PVNGS participants are insured against public liability exposure for a nuclear incident up to $16.3 billion per occurrence. PVNGS maintains the maximum available nuclear liability insurance in the amount of $500 million, which is provided by American Nuclear Insurers. The remaining $15.8 billion is provided through a mandatory industry-wide retrospective assessment program. If losses at any nuclear power plant covered by the program exceed the accumulated funds, PNM could be assessed retrospective premium adjustments. The maximum retrospective premium per reactor under the program for each nuclear liability incident is $165.9 million, subject to a maximum annual premium of $24.7 million per incident. Based on PNM's ownership interest in the three units, PNM's maximum retrospective premium per incident for all three units is $36.3 million, with a maximum annual payment limitation of $5.4 million, to be adjusted periodically for inflation.

The PVNGS participants maintain insurance for damage to, and decontamination of, property at PVNGS in the aggregate amount of $2.8 billion, a substantial portion of which must first be applied to stabilization and decontamination. These coverages are provided by Nuclear Electric Insurance Limited ("NEIL"). The primary policy offered by NEIL contains a sublimit of $2.25 billion for non-nuclear property damage. If NEIL's losses in any policy year exceed accumulated funds, PNM is subject to retrospective premium adjustments of $5.3 million. The insurance coverages discussed in this and the previous paragraph are subject to certain policy conditions, sublimits, and exclusions.

**(12) Regulatory and Rate Matters**

The Company is involved in various regulatory matters, some of which contain contingencies that are subject to the same uncertainties as those described in Note 11. Additional information concerning regulatory and rate matters is contained in Note 17 of the Notes to Consolidated Financial Statements in the 2024 Annual Reports on Form 10-K.

**TXNM**

*Merger Proceedings*

On August 25, 2025, TXNM filed applications for approval of its proposed Merger with Blackstone Infrastructure (Note 17) with the NMPRC, PUCT, and FERC. In addition to strong governance and oversight provisions, the applications include the following benefits for PNM and TNMP's customers:

Application to the NMPRC

- $105.0 million in retail rate credits to be paid over four years
- $10.0 million in additional contributions to the PNM Good Neighbor Fund to be paid over 10 years
- $35.0 million in economic development funding to be paid over 10 years
- $25.0 million commitment to innovative technologies to support New Mexico's transition to carbon-free energy
- PNM's continued strong community involvement and charitable giving

The NMPRC does not have a statutory timeframe for consideration of the application.

Table of Contents

**TXNM ENERGY, INC. AND SUBSIDIARIES**
**PUBLIC SERVICE COMPANY OF NEW MEXICO AND SUBSIDIARIES**
**TEXAS-NEW MEXICO POWER COMPANY AND SUBSIDIARIES**

**NOTES TO CONDENSED CONSOLIDATED FINANCIAL STATEMENTS**
(Unaudited)

Application to the PUCT

- Rate credits of $35.0 million to be paid over four years
- $10.0 million in economic development funding to be paid over 10 years
- $5.0 million in additional community support over 10 years to enhance charitable giving

The PUCT has a 180-day statutory timeframe for consideration of the application.

Application to the FERC

The application demonstrates that the Merger is consistent with the public interest because it will not have an adverse effect on competition, rates, and regulation and will not result in any inappropriate cross-subsidization. The FERC also has a 180-day statutory timeframe for consideration of the application.

**PNM**

*New Mexico General Rate Case*

*2025 Rate Request*

On June 14, 2024, PNM filed an application with the NMPRC for a general increase in retail electric rates. The proposed base rate changes would be implemented in two phases, with the first phase effective July 1, 2025 and the second phase effective January 1, 2026. Key aspects of PNM's request include:

- Recovery on total rate base of $3.0 billion, based on a FTY with the 12 months ending June 30, 2026
- An increase of $174.3 million in retail revenues, comprised of a $92.2 million increase in base rates and a $82.1 million increase in revenues collected under PNM's FPPAC
- Drivers of revenue deficiency:
  - Needed investments across distribution, transmission, and generation facilities to ensure safe, reliable delivery of electricity
  - Increased operations and maintenance expenses to meet operational needs, including wildfire risk mitigation
  - Costs associated with ESAs, previously approved by the NMPRC, necessary to serve our customers
  - ROE of 10.45%
  - Proposed capital structure of 52.5% equity
  - An increased cost of borrowing
  - Adjustments to Four Corners depreciation rates to recover remaining plant investments through July 2031, the expected abandonment date of the facility
- Proposed ratemaking treatment of ESAs to be recovered through PNM's FPPAC which began July 1, 2025

On November 26, 2024, PNM filed an unopposed comprehensive stipulation with the NMPRC. Key components agreed upon by the signatories are as follows:

- Overall revenue requirement increase of $105.0 million with the first phase effective July 1, 2025 and the second phase effective April 1, 2026
- ROE of 9.45%
- Capital structure of 51.0% equity
- Maintain currently approved depreciation rates for Four Corners as established in PNM's 2024 Rate Change and PNM's NM 2015 Rate Case
- Modification of PNM's current amortization period through December 31, 2028 on the unprotected Excess Deferred Federal Income Taxes ("EDFIT") regulatory liability to reflect amortization of remaining unprotected EDFIT through December 31, 2027
- Costs associated with ESAs shall be recovered through base rates
  - PNM will establish a regulatory asset or regulatory liability for the difference in actual ESA costs compared to the forecasted $82.1 million included in base rates in the test period and thereafter until new rates are effective from PNM's next general rate case filing. The regulatory asset or regulatory liability will be subject to NMPRC approval in PNM's next rate case
- PNM will establish a regulatory liability associated with investment tax credits for the Sandia energy storage system as proposed in its application

Table of Contents

**TXNM ENERGY, INC. AND SUBSIDIARIES**
**PUBLIC SERVICE COMPANY OF NEW MEXICO AND SUBSIDIARIES**
**TEXAS-NEW MEXICO POWER COMPANY AND SUBSIDIARIES**

**NOTES TO CONDENSED CONSOLIDATED FINANCIAL STATEMENTS**
(Unaudited)

- PNM will establish a regulatory liability equal to the return on legacy meters currently included in rates, as the legacy meters are retired during PNM's deployment of its approved Grid Modernization Plan
- PNM will make a one-time shareholder contribution of $1.5 million to the Good Neighbor Fund

A hearing was held on February 17 and 18, 2025. On April 8, 2025, the hearing examiners issued a certification of stipulation recommending approval of the unopposed stipulation and on May 15, 2025, the NMPRC issued a final order adopting the unopposed stipulation. This matter is now concluded.

*2024 Rate Change*

In December 2022, PNM filed an application with the NMPRC for a general increase in retail electric rates. On January 3, 2024, the NMPRC issued a final order authorizing PNM to implement an increase in non-fuel base rates of $15.3 million, effective for service beginning January 15, 2024. The final order included an ROE of 9.26% and a capital structure of 49.61% equity, 50.10% debt, and 0.29% preferred stock. As a result of the final order, PNM recorded a regulatory disallowance of $55.5 million and a corresponding reduction to Utility Plant in the year ended December 31, 2023, after accounting for previous impairments, to reflect the remedy adopted in the Final Order for Four Corners. In addition, PNM had recorded a reduction to electric operating revenues of $38.4 million with a corresponding increase to current regulatory liability of $19.2 million and deferred regulatory liability of $19.2 million for the PVNGS rate refunds that are being returned to customers over a two-year period ending March 2026. PNM had also recorded a regulatory disallowance of $8.2 million and a corresponding reduction to Utility Plant for the disallowance of construction work in progress ("CWIP") from PVNGS.

In March 2024, notice of appeals were separately filed with the NM Supreme Court by NEE and PNM, and a joint notice of appeal was filed by the NM Department of Justice, Bernalillo County, and Albuquerque Bernalillo County Water Utility Authority ("ABCWUA"). NEE's appeal was subsequently consolidated with the joint notice of appeal. In the statements of issues submitted in the parties' appellate dockets, PNM took issue with the NMPRC's ruling on capital structure; other appellants primarily challenged the NMPRC rulings related to Four Corners and Palo Verde cost recovery. On June 20, 2025, PNM filed an uncontested motion to dismiss its appeal. The NM Supreme Court granted PNM's uncontested motion to dismiss its appeal, and on September 25, 2025, issued a ruling rejecting the consolidated appeal and upholding the NMPRC's final order. This matter is now concluded.

*Renewable Energy Portfolio Standard*

As discussed in Note 11, the ETA amends the REA including removal of diversity requirements and certain customer caps and exemptions relating to the application of the RPS under the REA. The REA provides for streamlined proceedings for approval of utilities' renewable energy procurement plans, assures that utilities recover costs incurred consistent with approved procurement plans, and requires the NMPRC to establish a Reasonable Cost Threshold ("RCT") for the procurement of renewable resources to prevent excessive costs being added to rates. The ETA sets a RCT of $60 per MWh, adjusted for inflation, using an average annual levelized resource cost basis. PNM makes renewable procurements consistent with the NMPRC approved plans and recovers certain renewable procurement costs from customers through the renewable energy rider billed on a KWh basis.

Included in PNM's approved procurement plans are the following renewable energy resources:

- 158 MW of PNM-owned solar-PV facilities
- A PPA through 2044 for the output of New Mexico Wind, having a current aggregate capacity of 200 MW, and a PPA through 2035 for the output of Red Mesa Wind, having an aggregate capacity of 102 MW
- A PPA through 2040 for 140 MW of output from La Joya Wind II
- A PPA through 2042 for the output of the Lightning Dock Geothermal facility with a capacity of 11 MW
- Solar distributed generation, aggregating 327.9 MW at September 30, 2025, owned by customers or third parties from whom PNM purchases any net excess output and RECs

The NMPRC has authorized PNM to recover certain renewable procurement costs through a rate rider billed on a per KWh basis. In its 2025 renewable energy procurement plan, which became effective on January 1, 2025, PNM proposed to collect $58.7 million for the year. PNM recorded revenues from the rider of $10.9 million and $42.5 million in the three and nine months ended September 30, 2025 and $11.1 million and $41.7 million in the three and nine months ended September 30, 2024.

Under the renewable rider, if PNM's earned rate of return on jurisdictional equity in a calendar year, adjusted for items

Table of Contents



not representative of normal operations, exceeds the NMPRC-approved rate by 0.5%, PNM is required to refund the excess to customers during May through December of the following year. PNM did not exceed such limitation in 2024. On May 30, 2025, PNM filed its application for its 2026 renewable energy procurement plan, requesting to collect $54.3 million for the year. On September 25, 2025, the Hearing Examiners issued an RD recommending approval of PNM's application with no significant modifications and on October 30, 2025, the NMPRC issued a Final Order approving the application as filed.

*Energy Efficiency and Load Management*

*Program Costs and Incentives/Disincentives*

The EUEA requires public utilities to achieve specified levels of energy savings and to obtain NMPRC approval to implement energy efficiency and load management programs. The EUEA requires the NMPRC to remove utility disincentives to implementing energy efficiency and load management programs and to provide incentives for such programs. The NMPRC has adopted a rule to implement this act. PNM's costs to implement approved programs and incentives are recovered through a rate rider. During the 2019 New Mexico legislative session, the EUEA was amended to, among other things, include a decoupling mechanism for disincentives, preclude a reduction to a utility's ROE based on approval of disincentive or incentive mechanisms, establish energy savings targets for the period 2021 through 2025, and require that annual program funding be 3% to 5% of an electric utility's annual customer bills excluding gross receipt taxes, franchise and right-of-way access fees, provided that a customer's annual cost does not exceed seventy-five thousand dollars.

In 2023, PNM filed an application for energy efficiency and load management programs to be offered in 2024, 2025, and 2026 (the "2024 Plan"). The 2024 Plan proposed to continue ten existing energy efficiency programs with modification and a total annual budget of $34.5 million in 2024, $35.4 million in 2025, and $36.5 million in 2026. The application also sought approval of an annual base incentive of 7.1% of the portfolio budget and a sliding scale that provides additional incentive for additional energy saved as a percentage of program cost, up to the maximum allowed by the energy efficiency rule which for PNM is 8.82%. On January 26, 2024, the hearing examiners in the case issued a RD. The RD largely approved the 2024 Plan but with modifications that include the pursuit of demand response resources, additional analysis in future filings, adjustments to certain energy efficiency programs, and modification of the incentive sliding scale cap to reflect a new maximum. On March 7, 2024, the NMPRC approved the RD in its entirety.

*Integrated Resource Plans*

NMPRC rules require that investor-owned utilities file an IRP every three years and is required to cover a 20-year planning period and contain an action plan covering the first three years of that period. The IRP establishes a collaborative facilitated process for a utility and stakeholders to agree on a statement of need for potential new or additional resources, as well as an action plan to guide procurement or development of resources to meet the stated need. A most-cost-effective portfolio of resources shall be derived from the statement of need analysis. The statement of need and action plan must be accepted before the utility begins the resource solicitation process pursuant to the IRP Rule. Following acceptance of the statement of need and action plan, a utility will provide the NMPRC and intervenors drafts of the RFP and a timeline for issuing, receiving, evaluating, and ranking bids. The NMPRC will then appoint an Independent Monitor ("IM") to oversee the RFP process, which allows for parties and the IM to comment on the RFP consistency with the IRP, after which the utility issues the RFP. Within 120 days of receiving bids the utility shall provide the IM with results including pricing and non-price evaluation criteria, ranking of bids, chosen portfolio and alternatives that also meet the needs; the IM then rules on the fairness of the RFP execution. Acceptance of the statement of need and action plan will not constitute a finding of prudency or pre-approval of costs associated with the additional resources. Following the RFP and IM processes, the utility may apply for approvals, and any costs incurred to implement the action plan will be considered in a general rate case and/or resource acquisition proceeding.

*2023 IRP*

On December 15, 2023, PNM filed its 2023 IRP with a continued focus on a carbon-free energy system by 2040. The plan highlights the need for the significant sustained addition of resources over the next two decades, replacing retiring or expiring capacity, meeting concurrent load growth, while reducing the carbon intensity of PNM's portfolio. On April 4, 2024, the NMPRC accepted PNM's 2023 IRP.

On December 30, 2024, PNM issued its 2029-2032 RFP for at least 900 MW of new energy resources to come online between 2029 and 2032, with at least 500 MW needed by 2030. The RFP is consistent with the needs identified in PNM's 2023 IRP, which identified a range of 900 to 2,900 MW of new capacity needed by 2032, depending on the type of resources

Table of Contents

**TXNM ENERGY, INC. AND SUBSIDIARIES**
**PUBLIC SERVICE COMPANY OF NEW MEXICO AND SUBSIDIARIES**
**TEXAS-NEW MEXICO POWER COMPANY AND SUBSIDIARIES**

**NOTES TO CONDENSED CONSOLIDATED FINANCIAL STATEMENTS**
(Unaudited)

selected. The 2029-2032 RFP is anticipated to identify potential replacement resources for PNM's current natural gas generation capacity as well as PNM's ownership interest in Four Corners. PNM has been granted an extension from the required September 2025 deadline to a January 9, 2026 deadline to file and present PNM's evaluation of RFP bids, with the IM expected to issue a final report by February 9, 2026.

*2028 Resource Application*

On November 22, 2024, PNM filed an application with the NMPRC seeking approval of ESAs, a PPA, and a CCN for system resources in 2028 to be available to meet summer 2028 customer needs. PNM's request includes:

- Two 150 MW ESAs
- A 167 MW PPA for the Valencia power plant through 2039
- A CCN for a 100 MW solar facility and a 30 MW battery to be PNM-owned and located in San Juan County. The request provides the opportunity to increase the 30 MW battery by an additional 20 MW

On March 12, 2025, PNM and intervening parties filed an unopposed comprehensive stipulation with the NMPRC. The stipulation supports approval of PNM's application, including the proposed option to increase the 30 MW battery by an additional 20 MW. On May 6, 2025, the hearing examiners issued a certification of stipulation recommending approval of the unopposed stipulation and on June 26, 2025, the NMPRC approved the unopposed stipulation. This matter is now concluded.

*Grid Modernization Plan*

In October 2022, in compliance with New Mexico Grid Modernization Statute, PNM filed its Grid Modernization Plan with the NMPRC. The projects included in the application improve customers' ability to customize their use of energy and ensure that customers, including low-income customers, are a top priority and will benefit consistent with the Grid Modernization Statute. PNM's proposal to modernize its electricity grid through infrastructure and technology improvements also increases the efficiency, reliability, resilience, and security of PNM's electric system. PNM's application included grid modernization investments of approximately $344 million for the first six years of a broader 11-year strategy. The approved rate rider will recover capital costs, operating expenses, and taxes associated with the investments included in the plan. On October 17, 2024, the NMPRC issued a final order which largely approved PNM's application with minor modifications.

On June 20, 2025, PNM filed its first annual Grid Modernization Plan review to provide updates on year one implementation progress and outline planned activities for year two, in alignment with regulatory expectations. Additionally, PNM has updated key portions of the forecasted strategy including increasing investments from approximately $344 million to $367 million in the first six years, while decreasing projected operations and maintenance costs by approximately 18%.

*Transportation and Electrification Program (TEP)*

On June 1, 2023, PNM filed its 2024-2026 TEP with the NMPRC, requesting approval of a $37.1 million total three-year budget and continuation of the current TEP Rider. Approximately 22% of the budget, $8.0 million, will be dedicated to low-income customers. On February 2, 2024, the hearing examiners in the case issued a RD largely approving PNM's 2024-2026 TEP but with certain modifications. On February 23, 2024, the NMPRC approved the RD with modifications that reduced the three-year budget by $4.0 million, for a total revised budget of $32.9 million. The TEP rider became effective on April 26, 2024.

*EDAM*

As previously disclosed, PNM participates in the EIM, a real-time wholesale energy trading market operated by the CAISO, that enables participating electric utilities to buy and sell energy. EDAM is a voluntary day-ahead regional market that expands on CAISO's EIM market, which PNM plans on joining in the fall of 2027. On August 22, 2025, PNM filed an application with the NMPRC requesting approval to create a regulatory asset for the costs associated with joining the EDAM, which was approved in an accounting order issued on October 16, 2025. PNM expects to seek recovery of these costs in a future rate case.

*Meta Platforms Inc. Data Center - Phase IV*

PNM has a special service contract to provide service to Meta for a data center in PNM's service area. Meta's service requirements include the acquisition by PNM of a sufficient amount of new renewable energy resources and RECs to match the energy and capacity requirements of the data center. The cost of renewable energy procured is passed through to Meta under a

Table of Contents



rate rider. A special service rate is applied to Meta's energy consumption in those hours of the month when their consumption exceeds the energy production from the renewable resources.

On June 13, 2025, PNM filed an application with the NMPRC for an amended special service contract, PPAs, ESAs, special service rate, and an amended rate rider to service a new phase of the data center, the Greater Kudo, LLC Data Center. This amended special service contract requests:

- three 20-year solar PPAs totaling 290 MW
- three 20-year ESAs totaling 268 MW of storage
- a third revised and restated special service contract with Greater Kudo, LLC Data Center; and
- updates to the special service rate - Renewable Energy Resources, the Green Energy Rider, and the Production Cost Allocation Rider.

On July 3, 2025 a procedural order was issued and on October 21, 2025, a prehearing conference was held where all parties agreed that a public hearing was unnecessary and that the evidence on record was sufficient to support a RD. The NMPRC is expected to rule on the application during a future open meeting where public comment is permitted. PNM is unable to predict the outcome of this matter.

*BESS Project*

On August 6, 2025, PNM filed an application with the NMPRC for approval of a CCN to construct, own, and operate 30 MWs of energy storage. The application consists of 6 MW batteries to be constructed at five existing PNM-owned solar facilities located in Otero County, San Miguel County, Luna County and two sites in Valencia County. PNM estimates that the BESS Project will cost $78.7 million and will assist in serving our summer peak season when operational.

**TNMP**

*HB 5247*

On June 20, 2025, Texas House Bill 5247 ("HB 5247") was signed into law by Governor Gregg Abbott. HB 5247, which took effect immediately, added Section 36.216 to the Public Regulatory Act ("PURA 36.216"), authorizing certain electric utilities with total capital expenditures that exceeded 300 percent of annual depreciation in a calendar year, to elect, in the following calendar year, to file a single, annual proceeding to adjust nonfuel rates on a system-wide basis to reflect changes in transmission and distribution rates previously authorized under certain other interim rate mechanisms. A utility seeking to make this election under PURA 36.216 is required to file a notice with the PUCT informing them of its intent and provide supporting documentation of the applicable capital expenditures at least 60 days before filing the single, annual proceeding and correspondingly must notify the PUCT if the utility determines that it no longer qualifies for continued use of the election. Management has evaluated the application of HB 5247 and PURA 36.216 and determined that TNMP qualifies as the type of electric utility that would be eligible for the election. Currently, TNMP expects to make its first comprehensive filing under Section 36.216 in 2026 with a view towards recovering costs associated with eligible transmission and distribution investments that were placed into service after December 31, 2024 and that are not currently reflected in rates. In the interim, TNMP plans to immediately begin to recognize a regulatory asset for costs associated with its eligible transmission and distribution capital investments, including depreciation expense and carrying costs. At September 30, 2025 the regulatory asset associated with these costs totaled $2.2 million.

*Sales and Use Tax Refund*

On March 12, 2025, TNMP filed a refund claim with the Texas Comptroller's office for overpaid sales and use taxes primarily related to asset purchases. The $34.6 million refund claim covers periods from January 2022 to October 2024 and amounts received, net of consultant fees, are expected to be applied to 2025 TNMP capital projects. On September 22, 2025, TNMP received the requested refund net of $7.5 million in consultant fees; $24.7 million was applied to 2025 TNMP capital projects; $2.1 million to offset related interest expense; and $0.3 million for other related expenses.

*Transmission Cost of Service Rates*

TNMP can update its TCOS rates twice per year to reflect changes in its invested capital although updates are not allowed while a general rate case is in process. Updated rates reflect the addition and retirement of transmission facilities, including appropriate depreciation, federal income tax and other associated taxes, and the approved rate of return on such facilities.

Table of Contents

**TXNM ENERGY, INC. AND SUBSIDIARIES**
**PUBLIC SERVICE COMPANY OF NEW MEXICO AND SUBSIDIARIES**
**TEXAS-NEW MEXICO POWER COMPANY AND SUBSIDIARIES**

**NOTES TO CONDENSED CONSOLIDATED FINANCIAL STATEMENTS**
(Unaudited)

The following sets forth TNMP's recent interim transmission cost rate increases:

| Effective Date | Approved Increase in Rate Base | Annual Increase in Revenue |
|---|---|---|
| | (In millions) | |
| March 15, 2024 | $ 97.4 | $ 13.1 |
| September 20, 2024 | 20.6 | 3.9 |
| March 25, 2025 | 83.5 | 11.5 |
| September 19, 2025 | 87.4 | 12.3 |

*Periodic Distribution Rate Adjustment*

PUCT rules permit interim rate adjustments twice per year to reflect changes in investments in distribution assets. Additionally, a DCRF may be filed during a pending rate case proceeding as long as that DCRF request is not filed until the 185th day after the rate case proceeding was initiated. The following sets forth TNMP's recent interim distribution rate increases:

| Effective Date | Approved Increase in Rate Base | Annual Increase in Revenue |
|---|---|---|
| | (In millions) | |
| September 1, 2023 | $ 157.0 | $ 14.5 |
| July 28, 2024 | 205.9 | 15.6 |
| November 17, 2024 | 43.7 | 7.7 |
| June 29, 2025 | 176.6 | 25.0 |

On July 31, 2025, TNMP filed its second 2025 DCRF that requested an increase in TNMP annual distribution revenues of $5.4 million based on an increase in rate base of $27.9 million. The case is pending review by the PUCT.

*Energy Efficiency*

TNMP recovers the costs of its energy efficiency programs through an energy efficiency cost recovery factor ("EECRF"), which includes projected program costs, under and over collected costs from prior years, rate case expenses, and performance bonuses (if programs exceed mandated savings goals). On May 31, 2024, TNMP filed its request to adjust the EECRF to reflect changes in costs for 2025. On October 24, 2024, the PUCT approved the total amount requested, authorizing recovery of $7.0 million, which includes a performance bonus of $1.3 million based on TNMP's energy efficiency achievements in the 2023 plan year and became effective March 1, 2025. On May 30, 2025, TNMP filed its request to adjust the EECRF to reflect changes in costs for 2026. The total amount requested was $8.1 million, which includes a performance bonus of $2.5 million based on TNMP's energy efficiency achievements in 2024. The case is pending review by the PUCT.

*Hurricane Beryl*

On July 8, 2024, Hurricane Beryl made landfall in the Texas Gulf Coast leaving approximately 116,000 customers in the TNMP service area without power. As of September 30, 2025, TNMP incurred $54.0 million of costs, of which $33.5 million has been recorded in Utility Plant and $20.5 million has been recorded as a Regulatory Asset on the Condensed Consolidated Balance Sheets. TNMP will seek collection of such costs in a future regulatory proceeding.

*System Resiliency Plan ("SRP")*

In 2023, the Texas Legislature enacted House Bill No, 2555 ("HB 2555"), permitting an electric utility to seek approval of, and cost recovery for, a system resiliency plan. On August 28, 2024, TNMP filed its first SRP with the PUCT designed to benefit customers through enhanced resiliency of its distribution system, as intended under HB 2555. The SRP includes approximately $600 million of capital investments and approximately $151 million of other related costs over three years and was developed using a comprehensive and data-driven approach which evaluated various types of resiliency events posing material risk to the safe and reliable operation of TNMP's distribution system. TNMP's service territory includes non-contiguous areas across different regions of Texas, ranging from small communities and rural areas to communities around

Table of Contents



large metropolitan areas, each with unique risks. Investments in the SRP are prioritized based on customer benefit, physical protection of infrastructure, foundational investments in operational and cybersecurity technologies, and wildfire risk reduction and are focused on lower-performing areas in the context of reliability. Eight different resiliency measures are outlined in the SRP with associated programs and infrastructure impacts to improve the system's ability to prevent, withstand, mitigate and/or more promptly recover from resiliency events: distribution system resiliency, distribution system protection modernization, vegetation management, wildfire mitigation, flood mitigation, enhanced operations system technology, cybersecurity, and physical security resiliency. Recovery of investments and costs are permissible primarily through semi-annual DCRF filings, with deferral of depreciation and other certain expenses until recovery begins.

On December 11, 2024, TNMP filed an unopposed settlement with the PUCT. The settlement includes $565.8 million of capital investments over 2025 through 2027, reflecting 94% of TNMP's proposed plan investments. The settlement also encompasses $128.2 million of operations and maintenance expenses associated with several programs, including vegetation management and wildfire mitigation. On March 26, 2025, TNMP received the final order from the PUCT which included modifications reflecting capital investments of $545.8 million and $86.1 million of operating and maintenance costs. As of September 30, 2025, TNMP incurred $3.3 million of operating and maintenance costs, all of which have been recorded as a Regulatory Asset on the Condensed Consolidated Balance Sheets. TNMP will seek collection of such costs in a future regulatory proceeding.

**(13) Lease Commitments**

The Company leases office buildings, vehicles, energy storage facilities, and other equipment. In addition, certain rights-of-way agreements are classified as leases. All of the Company's leases with terms in excess of one year are recorded on the balance sheet by recording a present value lease liability and a corresponding right-of-use asset. Operating lease expense is recognized within operating expenses according to the use of the asset on a straight-line basis. Financing lease costs, which are comprised primarily of fleet and office equipment leases commencing after January 1, 2019, are recognized by amortizing the right-of-use asset on a straight-line basis and by recording interest expense on the lease liability. Financing lease right-of-use assets amortization is reflected in depreciation and amortization and interest on financing lease liabilities is reflected as interest charges on the Company's Condensed Consolidated Statements of Earnings. See additional discussion of the Company's leasing activities in Note 8 of the Notes to Consolidated Financial Statements in the 2024 Annual Reports on Form 10-K.

*PVNGS*

In 1985 and 1986, PNM entered into leases for its interest in PVNGS Unit 1 and 2. The leases initially were scheduled to expire in January 2015 for four Unit 1 leases and January 2016 for four Unit 2 leases. Following procedures set forth in the PVNGS leases, PNM notified four of the lessors under the Unit 1 leases and one lessor under the Unit 2 lease that it would elect to renew those leases on the expiration date of the original leases. The four Unit 1 leases expired in January 2023 and the one Unit 2 lease expired in January 2024. PNM has no further lease payments related to PVNGS Unit 1 or 2.

On April 5, 2021, PNM and Salt River Project entered into an Asset Purchase and Sale Agreement, pursuant to which PNM agreed to sell to Salt River Project certain PNM-owned assets and nuclear fuel necessary to the ongoing operation and maintenance of leased capacity in PVNGS Unit 1 and Unit 2. In January 2023, the Unit 1 leases expired, and PNM closed on the associated sale to Salt River Project. In January 2024, the Unit 2 leases expired, and PNM closed on the associated sale to Salt River Project, receiving payments totaling $3.4 million, of which $2.8 million was recorded as a reduction to Net utility plant on the Condensed Consolidated Balance Sheets and was presented as cash flows from investing activities on the Condensed Consolidated Statement of Cash Flows. In addition, $0.6 million was recorded as a reduction to Materials, supplies and fuel stock on the Condensed Consolidated Balance Sheets and was presented as cash flows from operating activities on the Condensed Consolidated Statement of Cash Flows.

*Land Easements and Rights-of-Way*

Many of PNM's electric transmission and distribution facilities are located on lands that require the grant of rights-of-way from governmental entities, Native American tribes, or private parties. PNM has completed several renewals of rights-of-way, the largest of which is a renewal with the Navajo Nation. PNM is obligated to pay the Navajo Nation annual payments of $6.0 million, subject to adjustment each year based on the Consumer Price Index, through 2029. PNM's April 2025 payment for the amount due under the Navajo Nation right-of-way lease was $8.8 million, which included amounts due under the Consumer Price Index adjustment. Changes in the Consumer Price Index subsequent to January 1, 2019 are considered variable lease payments.

Table of Contents

**TXNM ENERGY, INC. AND SUBSIDIARIES**
**PUBLIC SERVICE COMPANY OF NEW MEXICO AND SUBSIDIARIES**
**TEXAS-NEW MEXICO POWER COMPANY AND SUBSIDIARIES**

**NOTES TO CONDENSED CONSOLIDATED FINANCIAL STATEMENTS**
(Unaudited)

PNM has other prepaid rights-of-way agreements that are not accounted for as leases or recognized as a component of plant in service. PNM reflects the unamortized balance of these prepayments in other deferred charges on the Condensed Consolidated Balance Sheets and recognizes amortization expense associated with these agreements in the Condensed Consolidated Statement of Earnings over their term. As of September 30, 2025 and December 31, 2024, the unamortized balance of these rights-of-ways was $69.7 million and $67.1 million. PNM recognized amortization expense associated with these agreements of $1.1 million and $3.3 million in the three and nine months ended September 30, 2025 and $1.1 million and $3.2 million in the three and nine months ended September 30, 2024.

*Fleet Vehicles and Equipment*

Fleet vehicle and equipment leases commencing on or after January 1, 2019 are classified as financing leases. Fleet vehicle and equipment leases existing as of December 31, 2018 are classified as operating leases. The Company's fleet vehicle and equipment lease agreements include non-lease components for insignificant administrative and other costs that are billed over the life of the agreement. At September 30, 2025, residual value guarantees on fleet vehicle and equipment leases are $0.7 million, $0.6 million, and $1.3 million for PNM, TNMP, and TXNM Consolidated.

*Energy Storage Agreements*

The Company has ESAs with fixed payments over the life of the agreements, that are accounted for as operating leases, for which the Company records the initial lease liabilities and corresponding right-of-use assets. The Company also has ESAs with monthly payments that vary, depending on the available capacity of the energy storage facility, that are also accounted for as operating leases. However, due to the variable nature of the consideration, these agreements do not require a lease liability or a right-of-use asset to be recorded upon inception. Expenses for this type of lease are reflected in variable lease expense in the tables below. In addition, the Company has elected to separate lease components from non-lease components for ESAs and accordingly, does not include non-lease components in the measurement of the lease liability or right-of-use asset. The non-lease components, which are not included in the measurement of the lease liability or the corresponding right-of-use asset, comprise 25.5% of the value of the agreements.

Information related to the Company's operating leases recorded on the Condensed Consolidated Balance Sheets is presented below:

| | September 30, 2025 | | | December 31, 2024 | | |
|---|---|---|---|---|---|---|
| | PNM | TNMP | TXNM | PNM | TNMP | TXNM |
| | (In thousands) | | | | | |
| Operating leases: | | | | | | |
| Operating lease assets, net of amortization | $ 319,432 | $ 191 | $ 320,127 | $ 271,433 | $ 923 | $ 272,894 |
| Current portion of operating lease liabilities | 15,164 | 162 | 15,366 | 13,542 | 713 | 14,293 |
| Long-term portion of operating lease liabilities | 299,662 | 27 | 300,165 | 254,702 | 167 | 255,376 |

As discussed above, the Company classifies its fleet vehicle and equipment leases and its office equipment leases commencing on or after January 1, 2019 as financing leases.

Information related to the Company's financing leases recorded on the Condensed Consolidated Balance Sheets is presented below:

| | September 30, 2025 | | | December 31, 2024 | | |
|---|---|---|---|---|---|---|
| | PNM | TNMP | TXNM | PNM | TNMP | TXNM |
| | (In thousands) | | | | | |
| Financing leases: | | | | | | |
| Non-utility property | $ 27,796 | $ 31,352 | $ 60,558 | $ 24,548 | $ 24,420 | $ 50,144 |
| Accumulated depreciation | (12,395) | (14,341) | (27,175) | (10,997) | (13,411) | (24,604) |
| Non-utility property, net | 15,401 | 17,011 | 33,383 | 13,551 | 11,009 | 25,540 |
| | | | | | | |
| Other current liabilities | $ 5,163 | $ 6,012 | $ 11,535 | $ 4,311 | $ 4,527 | $ 9,126 |
| Other deferred credits | 10,263 | 11,028 | 21,931 | 9,262 | 6,504 | 16,470 |

Table of Contents

**TXNM ENERGY, INC. AND SUBSIDIARIES**
**PUBLIC SERVICE COMPANY OF NEW MEXICO AND SUBSIDIARIES**
**TEXAS-NEW MEXICO POWER COMPANY AND SUBSIDIARIES**

**NOTES TO CONDENSED CONSOLIDATED FINANCIAL STATEMENTS**
(Unaudited)

Information concerning the weighted average remaining lease terms and the weighted average discount rates used to determine the Company's lease liabilities is presented below:

| | September 30, 2025 | | | December 31, 2024 | | |
|---|---|---|---|---|---|---|
| | PNM | TNMP | TXNM | PNM | TNMP | TXNM |
| Weighted average remaining lease term (years): | | | | | | |
| Operating leases | 17.48 | 0.73 | 17.45 | 17.52 | 1.10 | 17.45 |
| Financing leases | 3.52 | 3.34 | 3.41 | 3.51 | 2.80 | 3.20 |
| Weighted average discount rate: | | | | | | |
| Operating leases | 5.73 % | 4.62 % | 5.73 % | 5.68 % | 4.41 % | 5.68 % |
| Financing leases | 5.32 % | 5.46 % | 5.38 % | 5.08 % | 5.19 % | 5.12 % |

Information for the components of lease expense is as follows:

| | Three Months Ended September 30, 2025 | | | Nine Months Ended September 30, 2025 | | |
|---|---|---|---|---|---|---|
| | PNM | TNMP | TXNM | PNM | TNMP | TXNM |
| | (In thousands) | | | | | |
| Operating lease cost: | | | | | | |
| Energy storage leases | $ 5,493 | $ — | $ 5,493 | $ 15,660 | $ — | $ 15,660 |
| Other operating leases | 1,863 | 105 | 1,987 | 5,589 | 390 | 6,035 |
| Amounts capitalized | (11) | (81) | (92) | (33) | (317) | (350) |
| Total operating lease expense | 7,345 | 24 | 7,388 | 21,216 | 73 | 21,345 |
| Financing lease cost: | | | | | | |
| Amortization of right-of-use assets | 1,255 | 1,612 | 2,956 | 3,686 | 4,455 | 8,409 |
| Interest on lease liabilities | 189 | 220 | 421 | 553 | 577 | 1,171 |
| Amounts capitalized | (941) | (1,527) | (2,468) | (2,719) | (4,177) | (6,897) |
| Total financing lease expense | 503 | 305 | 909 | 1,520 | 855 | 2,683 |
| Variable lease expense | 6,555 | — | 6,555 | 19,690 | — | 19,690 |
| Short-term lease expense | 173 | 4 | 182 | 542 | 16 | 605 |
| Total lease expense for the period | $ 14,576 | $ 333 | $ 15,034 | $ 42,968 | $ 944 | $ 44,323 |

| | Three Months Ended September 30, 2024 | | | Nine Months Ended September 30, 2024 | | |
|---|---|---|---|---|---|---|
| | PNM | TNMP | TXNM | PNM | TNMP | TXNM |
| | (In thousands) | | | | | |
| Operating lease cost: | | | | | | |
| Energy storage leases | $ 2,947 | $ — | $ 2,947 | $ 8,840 | $ — | $ 8,840 |
| Other operating leases | 1,888 | 217 | 2,124 | 5,855 | 723 | 6,610 |
| Amounts capitalized | (23) | (192) | (216) | (86) | (634) | (720) |
| Total operating lease expense | 4,812 | 25 | 4,855 | 14,609 | 89 | 14,730 |
| Financing lease cost: | | | | | | |
| Amortization of right-of-use assets | 1,042 | 1,235 | 2,356 | 3,379 | 3,866 | 7,361 |
| Interest on lease liabilities | 142 | 146 | 300 | 429 | 445 | 891 |
| Amounts capitalized | (748) | (1,133) | (1,882) | (2,345) | (3,476) | (5,822) |
| Total financing lease expense | 436 | 248 | 774 | 1,463 | 835 | 2,430 |
| Variable lease expense | 433 | — | 433 | 1,226 | — | 1,226 |
| Short-term lease expense | 182 | 7 | 276 | 534 | 19 | 656 |
| Total lease expense for the period | $ 5,863 | $ 280 | $ 6,338 | $ 17,832 | $ 943 | $ 19,042 |

Table of Contents

**TXNM ENERGY, INC. AND SUBSIDIARIES**
**PUBLIC SERVICE COMPANY OF NEW MEXICO AND SUBSIDIARIES**
**TEXAS-NEW MEXICO POWER COMPANY AND SUBSIDIARIES**

**NOTES TO CONDENSED CONSOLIDATED FINANCIAL STATEMENTS**
(Unaudited)

Supplemental cash flow information related to the Company's leases is as follows:

| | Nine Months Ended September 30, 2025 | | | Nine Months Ended September 30, 2024 | | |
|---|---|---|---|---|---|---|
| | PNM | TNMP | TXNM | PNM | TNMP | TXNM |
| | (In thousands) | | | | | |
| Cash paid for amounts included in the measurement of lease liabilities: | | | | | | |
| Operating cash flows from operating leases | $ 22,633 | $ 43 | $ 22,725 | $ 16,694 | $ 36 | $ 16,758 |
| Operating cash flows from financing leases | 196 | 141 | 379 | 143 | 75 | 235 |
| Finance cash flows from financing leases | 1,319 | 722 | 2,296 | 1,305 | 759 | 2,174 |
| Non-cash information related to right-of-use assets obtained in exchange for lease obligations: | | | | | | |
| Operating leases | $ 57,920 | $ 9 | $ 57,930 | $ 75 | $ 100 | $ 743 |
| Financing leases | 5,562 | 10,521 | 16,345 | 1,735 | 2,661 | 5,355 |

Capitalized lease costs are reflected as investing activities on the Company's Condensed Consolidated Statements of Cash Flows for the nine months ended September 30, 2025 and 2024. Future expected lease payments are shown below:

| | As of September 30, 2025 | | | | | | | |
|---|---|---|---|---|---|---|---|---|
| | PNM | | | TNMP | | TXNM | | |
| | | Operating | | | | | Operating | |
| | Financing | Energy Storage | Other | Financing | Operating | Financing | Energy Storage | Other |
| | (In thousands) | | | | | | | |
| Remainder of 2025 | $ 1,533 | $ 6,313 | $ 71 | $ 1,886 | $ 154 | $ 3,520 | $ 6,313 | $ 242 |
| 2026 | 5,651 | 25,250 | 7,045 | 6,337 | 16 | 12,381 | 25,250 | 7,130 |
| 2027 | 4,318 | 25,250 | 7,049 | 4,709 | 14 | 9,387 | 25,250 | 7,134 |
| 2028 | 2,872 | 25,250 | 7,052 | 3,193 | 11 | 6,242 | 25,250 | 7,135 |
| 2029 | 1,376 | 25,250 | 7,039 | 1,945 | — | 3,360 | 25,250 | 7,114 |
| Later years | 978 | 364,133 | 3,660 | 539 | — | 1,518 | 364,133 | 4,012 |
| Total minimum lease payments | 16,728 | 471,446 | 31,916 | 18,609 | 195 | 36,408 | 471,446 | 32,767 |
| Less: Imputed interest | 1,302 | 184,974 | 3,562 | 1,569 | 6 | 2,942 | 184,974 | 3,708 |
| Lease liabilities | $ 15,426 | $ 286,472 | $ 28,354 | $ 17,040 | $ 189 | $ 33,466 | $ 286,472 | $ 29,059 |

The above table includes $15.2 million, $14.7 million, and $30.2 million for PNM, TNMP, and TXNM at September 30, 2025 for expected future payments on fleet vehicle and equipment leases that could be avoided if the leased assets were returned and the lessor is able to recover estimated market value for the equipment from third parties.

At September 30, 2025, the Company has an ESA that has been executed with a lease component that has not yet commenced. The lease component begins in 2029, expires in 2044, and will be recognized as a lease asset and liability upon the commencement. The expected total fixed consideration to be paid for this arrangement, which includes non-lease payments, is approximately $94.3 million over the 20-year term of the agreement.

**(14) Income Taxes**

The Company makes an estimate of its anticipated effective tax rate for the year as of the end of each quarterly period within its fiscal year. In interim periods, income tax expense is calculated by applying the anticipated annual effective tax rate to year-to-date earnings before income taxes. Certain unusual or infrequently occurring items are excluded from the estimated annual rate calculation. Such items include regulatory disallowances, Merger-related costs, and excess tax benefits or deficiencies related to stock awards. At September 30, 2025, TXNM, PNM, and TNMP estimated their effective income tax rates for the year ended December 31, 2025 would be 13.04%, 9.59%, and 20.43%. The primary difference between the statutory income tax rates and the effective tax rates is the effect of the reduction in income tax expense resulting from the amortization of excess deferred federal income taxes.

Table of Contents

**TXNM ENERGY, INC. AND SUBSIDIARIES**
**PUBLIC SERVICE COMPANY OF NEW MEXICO AND SUBSIDIARIES**
**TEXAS-NEW MEXICO POWER COMPANY AND SUBSIDIARIES**

**NOTES TO CONDENSED CONSOLIDATED FINANCIAL STATEMENTS**
(Unaudited)

During the nine months ended September 30, 2025, income tax expense was calculated by applying the expected annual effective income tax rate to earnings before income taxes was decreased by $4.7 million for the tax effects of Merger related costs, of which $0.2 million was allocated to PNM and $0.2 million was allocated to TNMP. Excess tax benefits related to stock awards decreased tax expense by $0.4 million for TXNM, with $0.3 million allocated to PNM and $0.1 million allocated to TNMP. Tax expense was increased by $0.2 million for the tax effects of regulatory disallowances at TXNM and PNM.

Beginning February 2018, PNM's NM 2016 Rate Case reflected the reduction in the federal corporate income tax rate resulting from enactment of legislation commonly known as the Tax Cuts and Jobs Act (the "TCJA"), including amortization of excess deferred federal income taxes. In accordance with the order in that case, PNM is returning the protected portion of excess deferred federal income taxes to customers over the average remaining life of plant in service as of December 31, 2017, and had been returning the unprotected portion of excess deferred federal income taxes to customers over a period of approximately twenty-three years. Pursuant to the final order in the 2024 Rate Change, the remaining balance of $62.7 million of unprotected excess deferred income taxes is being returned over a four-year period. The approved settlement in the TNMP 2018 Rate Case includes a reduction in customer rates to reflect the impacts of the TCJA beginning on January 1, 2019. TXNM, PNM, and TNMP will amortize federal excess deferred income taxes of $25.6 million, $22.9 million, and $2.7 million in 2025. See additional discussion of the impacts of the TCJA in Note 18 of the Notes to Consolidated Financial Statements in the 2024 Annual Reports on Form 10-K.

On July 4, 2025, changes in U.S. federal income tax laws were enacted through the OBBBA. The OBBBA generally extends and makes permanent the changes from the TCJA, including maintaining the 21% corporate tax rate, interest deductibility for regulated electric utilities, and state and local tax deductibility. The OBBBA also accelerates the phase-out of certain Inflation Reduction Act of 2022 energy tax credits and restricts the availability of credits for "foreign entities of concern." As a result, TXNM anticipates potentially higher costs associated with any future renewable energy development but does not expect other aspects of the OBBBA to have a material impact on its financial statements.

**(15) Related Party Transactions**

TXNM, PNM, TNMP, and NMRD are considered related parties, as is PNMR Services Company, a wholly-owned subsidiary of TXNM that provides corporate services to TXNM and its subsidiaries in accordance with shared services agreements. These services are billed at cost on a monthly basis to the business units. In addition, prior to the sale of NMRD, PNM purchased renewable energy from certain NMRD-owned facilities at a fixed price per MWh of energy produced. On February 27, 2024, PNMR Development and AEP OnSite Partners sold their respective interests in NMRD and the table below reflects transactions with NMRD prior to the sale. The table below summarizes the nature and amount of related party transactions of TXNM, PNM, TNMP, and NMRD:

| | Three Months Ended September 30, | | Nine Months Ended September 30, | |
|---|---|---|---|---|
| | 2025 | 2024 | 2025 | 2024 |
| | (In thousands) | | | |
| Services billings: | | | | |
| TXNM to PNM | $ 30,866 | $ 33,095 | $ 98,270 | $ 99,525 |
| TXNM to TNMP | 12,136 | 13,192 | 39,621 | 40,314 |
| PNM to TNMP | 82 | 178 | 247 | 368 |
| TNMP to TXNM | 22 | 75 | 78 | 85 |
| TNMP to PNM | — | 497 | — | 497 |
| TXNM to NMRD | — | — | — | 66 |
| Renewable energy purchases: | | | | |
| PNM from NMRD | — | — | — | 1,523 |
| Interest billings: | | | | |
| TXNM to PNM | 49 | 77 | 133 | 116 |
| PNM to TXNM | 133 | 156 | 398 | 465 |
| TXNM to TNMP | 24 | 23 | 210 | 202 |

**(16) Goodwill**

The excess purchase price over the fair value of the assets acquired and the liabilities assumed by TXNM for its 2005 acquisition of TNP Enterprises, Inc. and Subsidiaries ("TNP") was recorded as goodwill and was pushed down to the businesses acquired. In 2007, the TNMP assets that were included in its New Mexico operations, including goodwill, were transferred to PNM. TXNM's reporting units that currently have goodwill are PNM and TNMP. The Company evaluates its goodwill for impairment annually at the reporting unit level or more frequently if circumstances indicate that the goodwill may

Table of Contents

**TXNM ENERGY, INC. AND SUBSIDIARIES**
**PUBLIC SERVICE COMPANY OF NEW MEXICO AND SUBSIDIARIES**
**TEXAS-NEW MEXICO POWER COMPANY AND SUBSIDIARIES**

**NOTES TO CONDENSED CONSOLIDATED FINANCIAL STATEMENTS**
(Unaudited)

be impaired. Application of the impairment test requires judgment, including the identification of reporting units, assignment of assets and liabilities to reporting units, and determination of the fair value of each reporting unit.

In certain circumstances an entity may perform a qualitative analysis to conclude that the goodwill of a reporting unit is not impaired. Under a qualitative assessment an entity considers macroeconomic conditions, industry and market considerations, cost factors, overall financial performance, other relevant entity-specific events affecting a reporting unit, as well as whether a sustained decrease (both absolute and relative to its peers) in share price has occurred. An entity considers the extent to which each of the adverse events and circumstances identified could affect the comparison of a reporting unit's fair value with its carrying amount. An entity places more weight on the events and circumstances that most affect a reporting unit's fair value or the carrying amount of its net assets. An entity also considers positive and mitigating events and circumstances that may affect its determination of whether it is more likely than not that the fair value of a reporting unit is less than its carrying amount. An entity evaluates, on the basis of the weight of evidence, the significance of all identified events and circumstances in the context of determining whether it is more likely than not that the fair value of a reporting unit is less than its carrying amount. A quantitative analysis is not required if, after assessing events and circumstances, an entity determines that it is not more likely than not that the fair value of a reporting unit is less than its carrying amount.

In other circumstances, an entity may perform a quantitative analysis to reach the conclusion regarding impairment with respect to a reporting unit. An entity may choose to perform a quantitative analysis without performing a qualitative analysis and may perform a qualitative analysis for certain reporting units, but a quantitative analysis for others. The first step of the quantitative impairment test requires an entity to compare the fair value of the reporting unit with its carrying value, including goodwill. If, as a result of this analysis, the entity concludes there is an indication of impairment in a reporting unit having goodwill, the entity is required to perform the second step of the impairment analysis, determining the amount of goodwill impairment to be recorded. The amount is calculated by comparing the implied fair value of the goodwill to its carrying amount. This exercise would require the entity to allocate the fair value determined in step one to the individual assets and liabilities of the reporting unit. Any remaining fair value would be the implied fair value of goodwill on the testing date. To the extent the recorded amount of goodwill of a reporting unit exceeds the implied fair value determined in step two, an impairment loss would be reflected in results of operations.

TXNM periodically updates its quantitative analysis for both PNM and TNMP. The use of a quantitative approach in a given period is not necessarily an indication that a potential impairment has been identified under a qualitative approach. When TXNM performs a quantitative analysis for PNM or TNMP, a discounted cash flow methodology is primarily used to estimate the fair value of the reporting unit. This analysis requires significant judgments, including estimations of future cash flows, which is dependent on internal forecasts, estimations of long-term growth rates for the business, and determination of appropriate weighted average cost of capital for the reporting unit. Changes in these estimates and assumptions could materially affect the determination of fair value and the conclusion of impairment. When TXNM performs a qualitative or quantitative analysis for PNM or TNMP, TXNM considers market and macroeconomic factors including changes in growth rates, changes in the WACC, and changes in discount rates. TXNM also evaluates its stock price relative to historical performance, industry peers, and to major market indices, including an evaluation of TXNM's market capitalization relative to the carrying value of its reporting units.

For its annual evaluations performed as of April 1, 2025, TXNM performed a qualitative analysis for both the PNM and TNMP reporting units. In addition to the typical considerations discussed above, the qualitative analysis considered changes in the Company's expectations of future financial performance since the April 1, 2024 quantitative analysis performed for PNM, as well as the April 1, 2020 quantitative analysis and the previous qualitative analyses through April 1, 2024 performed for TNMP. This analysis considered Company-specific events such as the Merger, potential impacts of legal and regulatory matters discussed in Note 11 and Note 12, including the outcomes in the 2025 Rate Request, PNM's Grid Modernization Plan, and TNMP's System Resiliency Plan. Based on an evaluation of these and other factors, the Company determined it was not more likely than not that the April 1, 2025 carrying values of PNM and TNMP exceeded their fair value.

For its annual evaluations performed as of April 1, 2024, TXNM performed a quantitative analysis for the PNM reporting unit and a qualitative analysis for the TNMP reporting unit. The quantitative analysis, discussed above, indicated that the fair value of the PNM reporting unit, which has goodwill of $51.6 million, exceeded its carrying value by approximately 54%. The qualitative analysis, in addition to the typical considerations discussed above, considered changes in the Company's expectations of future financial performance since the April 1, 2020 quantitative analysis and the previous qualitative analyses through April 1, 2023 performed for TNMP. The April 1, 2020 quantitative evaluations indicated the fair value of the TNMP reporting unit, which has goodwill of $226.7 million, exceeded its carrying value by approximately 38%. This analysis considered events specific to TNMP such as the potential impacts of legal and regulatory matters discussed in Note 11 and Note 12. Based on an evaluation of these and other factors, the Company determined it was not more likely than not that the April 1, 2024 carrying values of PNM and TNMP exceeded their fair value. Since the April 1, 2024 annual evaluation, there have been no events, including the Merger, or indications that the fair values of the reporting units with recorded goodwill have decreased below their carrying values.

Table of Contents

**TXNM ENERGY, INC. AND SUBSIDIARIES**
**PUBLIC SERVICE COMPANY OF NEW MEXICO AND SUBSIDIARIES**
**TEXAS-NEW MEXICO POWER COMPANY AND SUBSIDIARIES**

**NOTES TO CONDENSED CONSOLIDATED FINANCIAL STATEMENTS**
(Unaudited)

**(17) Merger**

On May 18, 2025, TXNM, Parent, and Merger Sub, entered into the Merger Agreement, pursuant to which Merger Sub will merge with and into TXNM, with TXNM surviving the Merger as a direct wholly-owned subsidiary of Parent. Parent and Merger Sub are affiliates of Blackstone Infrastructure.

Pursuant to the Merger Agreement, each issued and outstanding share of the common stock of TXNM (other than (i) the issued shares of TXNM common stock that are owned by TXNM, Parent, Merger Sub, or any other wholly-owned subsidiaries of Parent or TXNM, in each case, not held on behalf of third parties, which will be automatically cancelled at the Effective Time and (ii) shares of TXNM common stock outstanding immediately prior to the Effective Time and held by a holder who has not voted in favor of, or consented in writing to, the Merger who is entitled to, and who has demanded, payment for fair value of such shares in accordance with applicable New Mexico law) will, at the Effective Time, be converted into the right to receive $61.25 in cash, without interest.

The proposed Merger has been unanimously approved by the Board. Consummation of the Merger is subject to the satisfaction or waiver of certain customary conditions, including, without limitation, the approval by at least a majority of the holders of outstanding shares of TXNM common stock entitled to vote thereon, the absence of any material adverse effect on TXNM, no legal prohibition on the consummation of the Merger (a "Legal Restraint"), and the receipt of certain required regulatory approvals (including PUCT, NMPRC, FERC, NRC and under the Hart-Scott-Rodino Antitrust Improvements Act of 1976). The Merger Agreement does not contain any financing condition. On August 25, 2025 TXNM filed applications for regulatory approvals to the NMPRC, PUCT, and FERC (Note 12). On August 28, 2025, TXNM held a special meeting of shareholders whereby a majority of the holders of outstanding shares of TXNM common stock as of the close of business on July 17, 2025, voted to approve the Merger. The Merger is currently expected to close in the second half of 2026.

The Merger Agreement may be terminated by each of TXNM and Parent under certain circumstances, including if the Merger is not consummated by the 15-month anniversary of the execution of the Merger Agreement (as extended, the "End Date"), so long as failure of the Merger to consummate on or before the End Date was not due to the breach of the Merger Agreement by such party, subject to an automatic extension of the End Date until December 31, 2026 and an additional three-month extension by mutual agreement of the parties, in each case if all of the conditions to the closing, other than the conditions related to obtaining regulatory approvals or the absence of a Legal Restraint, have been satisfied or waived. The Merger Agreement also provides for other customary termination rights for both Parent (including if the Board changes its recommendation in respect of the Merger) and TXNM. The Merger Agreement further provides that, upon termination of the Merger Agreement under certain specified circumstances (including if Parent terminates the Merger Agreement due to a change in recommendation of the Board or if TXNM terminates the Merger Agreement to accept a Superior Proposal), TXNM will be required to pay Parent a termination fee of $210.0 million plus costs and expenses ("TXNM Termination Fee"). In addition, the Merger Agreement provides that (i) if the Merger Agreement is terminated by either party as a result of a Legal Restraint (solely in connection with required regulatory approvals), (ii) if the Merger Agreement is terminated by either party as a result of the Merger not being consummated by the End Date, (iii) the Merger Agreement is terminated by TXNM as a result of a terminable breach by Parent, (iv) Parent fails to effect the closing when all closing conditions have been satisfied and it is otherwise obligated to do so under the Merger Agreement or (v) TXNM terminates the June 2025 Purchase Agreement (as defined below) as a result of Purchaser (as defined below) failing to timely consummate the Stock Purchase Closing (as defined below), then, in any such case, upon termination of the Merger Agreement, Parent will be required to pay TXNM a termination fee of $350.0 million plus costs and expenses as the sole and exclusive remedy (the "Parent Termination Fee").

Parent and Merger Sub have obtained equity and debt financing commitments for the transactions contemplated by the Merger Agreement. Pursuant to an equity commitment letter dated May 18, 2025 (the "Equity Commitment Letter"), Blackstone Infrastructure committed to provide Parent, at the consummation of the Merger, with an equity contribution in the amount set forth therein. In addition, pursuant to debt commitment letters ("Debt Commitment Letters") delivered to Merger Sub, Royal Bank of Canada, MUFG Bank, Ltd., BNP Paribas, Sumitomo Mitsui Banking Corporation and Canadian Imperial Bank of Commerce have agreed to provide debt financing to Merger Sub following the Closing on the terms and subject to the conditions set forth therein. The equity financing, when funded in accordance with the Equity Commitment Letter together with the debt financing when funded in accordance with the Debt Commitment Letters, will provide an amount that is sufficient to fund the payment of (i) the aggregate per share merger consideration, (ii) the repayment of certain TXNM debt to be satisfied at Closing and (iii) all related fees, costs and expenses. Additionally, following Closing, Parent and TXNM will have sufficient funds to repay, prepay or discharge certain other debt obligations of TXNM. In addition, Blackstone Infrastructure has entered into a limited guarantee with TXNM (the "Limited Guarantee"), pursuant to which Blackstone Infrastructure has guaranteed the obligations of Parent and Merger Sub to pay the Parent Termination Fee and certain costs and expenses reimbursement obligations of TXNM under the Merger Agreement. The Limited Guarantee is capped at $375.0 million.

Upon consummation of the Merger, the outstanding shares of TXNM common stock will be delisted from the New York Stock Exchange ("NYSE") and deregistered under the Exchange Act.

Table of Contents

## ITEM 2. MANAGEMENT'S DISCUSSION AND ANALYSIS OF FINANCIAL CONDITION AND RESULTS OF OPERATIONS

The following Management's Discussion and Analysis of Financial Condition and Results of Operations for TXNM is presented on a combined basis, including certain information applicable to PNM and TNMP. The MD&A for PNM and TNMP is presented as permitted by Form 10-Q General Instruction H(2). This report uses the term "Company" when discussing matters of common applicability to TXNM, PNM, and TNMP. A reference to a "Note" in this Item 2 refers to the accompanying Notes to Condensed Consolidated Financial Statements (Unaudited) included in Item 1, unless otherwise specified. Certain of the tables below may not appear visually accurate due to rounding.

### *MD&A FOR TXNM*

### EXECUTIVE SUMMARY

#### Overview

TXNM is a holding company with two regulated electric utilities, PNM and TNMP, serving approximately 839,000 residential, commercial, and industrial customers in New Mexico and Texas. TXNM strives to create a clean and bright energy future for customers, communities, and shareholders. TXNM's strategy and decision-making are focused on safely providing reliable, affordable, and environmentally responsible power built on a foundation of sustainability.

#### *Recent Developments*

*Merger*

On May 18, 2025, TXNM, Parent, and Merger Sub (both Parent and Merger Sub are affiliates of Blackstone Infrastructure) entered into the Merger Agreement pursuant to which Merger Sub will merge with and into TXNM, with TXNM surviving the Merger as a direct, wholly-owned subsidiary of Parent. Pursuant to the Merger Agreement, each issued and outstanding share of the common stock of TXNM (other than those listed in Note 17) at the Effective Time will be converted into the right to receive $61.25 in cash, without interest.

The proposed Merger has been unanimously approved by the Board. However, consummation of the Merger remains subject to the satisfaction or waiver of certain customary conditions, including, without limitation, the approval by at least a majority of the holders of the common stock of TXNM (which occurred at the special meeting held on August 28, 2025), no Legal Restraint, and the receipt of certain required regulatory approvals (including the PUCT, the NMPRC, the FERC, the NRC and under the Hart-Scott-Rodino Antitrust Improvements Act of 1976). TXNM has filed applications for regulatory approval of the Merger with the NMPRC, PUCT, and FERC (Note 12). The Merger Agreement does not contain any financing condition and is currently expected to close in the second half of 2026.

#### *Vision, Values, and Business Objectives*

TXNM's vision is to create a clean and bright energy future while fulfilling its purpose to work together with customers and communities to meet their energy needs. TXNM's core values of Safety, Caring, and Integrity are the foundation for the Company's business objectives focused on safety excellence and customer satisfaction, including reliability.

To reach these objectives, the Company is committed to:

- Preparing our workforce with the knowledge and skills to thrive in a customer-focused world
- Purposefully delivering an intentional customer experience that exceeds our evolving customer and stakeholder expectations
- Enabling an environmentally sustainable future and deploying technologically advanced solutions that empower and benefit customers
- Demonstrating the relationship between customer excellence and our dedicated focus on financial strength

Meeting the business objectives above will drive key financial results, including:

- Earning authorized returns on regulated businesses
- Delivering at or above industry-average long-term earnings growth, with a dividend payout ratio between 50 and 60 percent of earnings
- Maintaining investment grade credit ratings

Table of Contents

***Business Focus***

To achieve its business objectives, focus is directed in key areas: Safe, Reliable, and Affordable Power; Utility Plant Investments; Superior Customer Experience; Environmentally Responsible Power; and Stakeholder and Community Engagement. The Company works closely with its stakeholders to ensure that resource plans and infrastructure investments benefit from robust public dialogue and balance the diverse needs of our communities. Equally important is the focus of TXNM's utilities on customer satisfaction and community engagement.

*Safe, Reliable, and Affordable Power*

Safety is the first priority of our business and a core value of the Company. TXNM utilizes a Safety Management System to provide clear direction, objectives and targets for managing safety performance and minimizing risks and empowers employees to "Be the Reason Everyone Goes Home Safe."

TXNM measures reliability and benchmark performance of PNM and TNMP against other utilities using industry-standard metrics, including System Average Interruption Duration Index and System Average Interruption Frequency Index. PNM's and TNMP's investment plans include projects designed to support reliability and reduce the amount of time customers are without power.

TXNM and its utilities are aware of the important roles they play in enhancing economic vitality in their service territories. Management believes that maintaining strong and modern electric infrastructure is critical to ensuring reliability and supporting economic growth. When contemplating expanding or relocating their operations, businesses consider energy affordability and reliability to be important factors. PNM and TNMP strive to balance service affordability with infrastructure investment to maintain a high level of electric reliability and to deliver a safe and superior customer experience. Investing in PNM's and TNMP's infrastructure is critical to ensuring reliability and meeting future energy needs. Both utilities have long-established records of providing customers with safe and reliable electric service.

PNM participates in the EIM, a real-time wholesale energy trading market operated by the CAISO, that enables participating electric utilities to buy and sell energy. The EIM aggregates the variability of electricity generation and load for multiple balancing authority areas and utility jurisdictions. In addition, the EIM facilitates greater integration of renewable resources through the aggregation of flexible resources by capturing diversity benefits from the expanding geographic footprint and the expanded potential uses for those resources. PNM passes the cost savings achieved by participating in the EIM through to customers under PNM's FPPAC. PNM also plans to join the Extended Day Ahead Market ("EDAM"), which is a voluntary day-ahead regional market that expands on CAISO's EIM market, in the fall of 2027.

PNM joined the WRAP in April 2023 to bolster PNM's preparations for times of critical need. WRAP is a first-of-its-kind program in the West that adds a region-wide coordination between power providers for assessing and addressing resource adequacy. This step helps ensure regional resource availability is visible and coordinated in the event PNM customers are critically impacted by a resource emergency. WRAP is currently in the non-binding phases of the program, which is expected to continue through the summer of 2027. PNM has successfully complied with all WRAP requirements to date and fully supports the need to align a resource adequacy program with coordination between power providers. However, on October 28, 2025, PNM notified the Western Power Pool that it has elected to withdraw from WRAP and will not proceed into the binding phase. PNM will seek to align resource adequacy coordination with others in the EDAM regional market to maximize customer benefits.

*Utility Plant Investments*

During the 2023 and 2024 periods, PNM and TNMP together invested $2.3 billion in utility plant, including transmission and distribution systems, substations, power plants, and nuclear fuel. Investment plans emphasize new investments in transmission and distribution infrastructure to support growing demand with grid reliability and resilience and to deliver clean energy. The Company has been improving the diversification of its rate base among regulatory jurisdictions, moving TNMP and FERC transmission rate base to over half of the consolidated rate base.

Investments at TNMP support the continued high growth across each region of its service territory. Economic growth across Texas continues to push the demands on TNMP's system to new levels, including a new system peak in February 2025. Additionally in 2023, the Texas legislature passed a series of bills aimed at encouraging investments to enhance grid reliability and resilience, while the PUCT continues to develop rules with the support of this new legislation. TNMP will continue to submit filings for recovery of its investments, in accordance with these new rules, in addition to the existing rate recovery mechanisms. In June 2025, HB 5247 added Section 36.216 to PURA, which immediately authorized certain electric utilities, like TNMP to elect to defer costs, including depreciation expenses and carrying costs, for qualifying investments to a regulatory asset until the following year in which they would file a single, annual proceeding upon notification to the PUCT.

Investments at PNM are aimed at advancing the infrastructure beyond its original architecture to a more flexible and redundant system accommodating growing amounts of intermittent and distributed generation resources and integrating evolving technologies that provide long-term customer value. New Mexico's clean energy future depends on a reliable,

Table of Contents

resilient, secure grid to deliver an evolving mix of energy resources to customers. In addition, projects included in the Grid Modernization Plan will improve customers' ability to customize their use of energy and modernize PNM's electric grid through infrastructure and technology improvements.

See the subheading Capital Requirements included in the full discussion of Liquidity and Capital Resources below for additional discussion of the Company's projected capital requirements.

*Superior Customer Experience*

The Company strives to deliver a superior customer experience. With reliability being the primary role of a transmission and distribution service provider in Texas' deregulated market, TNMP continues to focus on keeping end-users updated about interruptions and to encourage consumer preparation when severe weather is forecasted. In 2024, TNMP made significant strides in improving customer satisfaction related to power outages by providing a more user-friendly experience on TNMP's outage map information system, making it easier for customers to access real-time outage information. In addition, TNMP introduced a new system that allows customers to receive outage alerts through multiple communication channels to enhance transparency and to ensure customers stay informed during outages. In September 2024, TNMP sent employees to assist in restoring power to those communities impacted by Hurricane Helene and in January 2025 TNMP was announced as an EEI Emergency Response Award recipient. The EEI Emergency Response Awards recognize recovery and assistance efforts of electric companies following service disruptions caused by extreme weather or other natural events.

Throughout 2024 and into 2025, PNM continues to hold in-person engagements with customer advisory councils. These engagements have helped PNM to build and improve customer relationships and have provided PNM with valuable customer insights to gauge customer interest levels towards programs and services to be highly customer centric. Additionally, PNM continues to focus its efforts to enhance the customer experience through customer service improvements, including enhanced digital payment options, strategic customer outreach, and improved communications. In early 2025, PNM introduced a redesigned customer bill to make it easier for customers to understand their bill as a part of a broader commitment improving transparency and usability. While the electric utility industry continues to experience declines in customer satisfaction, as measured by J.D. Power, PNM's ranking in 2025 remains stable, reflecting the Company's sustained efforts to improve the customer journey through a more seamless and customer-friendly experience. PNM continues to focus on addressing energy affordability by promoting participation in utility programs among households with high energy burden to offset high bills. PNM has implemented efforts to increase participation in low-income energy efficiency programs, providing additional aid through the PNM Good Neighbor Fund, partnering with state agencies to make it easier to access funding, improving access to clean energy through expanded outreach and communication, and the implementation of low-income transportation electrification programs. As a result of these communication efforts, 4,439 families in need have received emergency assistance through the PNM Good Neighbor Fund in the nine months ended September 30, 2025.

*Environmentally Responsible Power*

TXNM has a long-standing record of environmental stewardship. PNM's environmental focus is in three key areas:

- Developing strategies to provide reliable and affordable power while transitioning to a 100% carbon-free generating portfolio by 2040
- Preparing PNM's system to meet New Mexico's increasing renewable energy requirements as cost-effectively as possible
- Increasing energy efficiency participation

TXNM's corporate website (www.txnmenergy.com) includes a dedicated section providing key environmental and other information related to PNM's and TNMP's operations, including information that collectively demonstrates the Company's commitment to sustainability. This information highlights plans for PNM to be coal-free no later than 2031 and to achieve a carbon-free generating portfolio by 2040.

PNM's Grid Modernization Plan is a major step forward to providing reliable, affordable and sustainable energy. As part of that plan, PNM will promote energy equity where technology like smart meters and distribution upgrades will be provided to low-income areas first in order to allow customers to gain insights into their energy usage in order to improve affordability and create fairer access to energy. In addition, PNM's Time-of-Day pilot approved in the 2024 Rate Change final order incentivizes customers, through price signals, to use energy during the day when renewable generation is abundant.

The IRA provided benefits for TXNM and its customers by extending and enhancing clean energy incentives such as the investment tax credit and production tax credit. As the Company continues its transition away from carbon emitting sources, these credits reduce the cost of renewable investments. In addition, the IRA includes a new production tax credit for existing nuclear facilities that may create an added benefit for PNM's ownership in the carbon-free PVNGS. Other IRA provisions encourage transportation electrification with new EV credits and added incentives for vehicle charging infrastructure. In July 2025, the newly enacted OBBBA began to accelerate the phase-out of certain IRA energy tax credits and restricts the availability of credits for "foreign entities of concern."

Table of Contents

*Electric Vehicles*

TXNM is building upon its goal of 100% carbon-free generation by 2040 with plans for additional emissions reductions through the electrification of its vehicle fleet. Growing the number of EVs within the Company's fleet will benefit the environment and lower fuel costs furthering the commitment to sustainability. Under the commitment, existing fleet vehicles will be replaced as they are retired with an increasing percentage of EVs. The goals call for 25% of all light duty fleet purchases to be electric by 2025 and 50% to be electric by 2030.

To demonstrate TXNM's commitment to increase the electrification of vehicles in its service territory, PNM implemented its first TEP in 2022 and received approval of its 2024-2026 TEP in 2024. PNM has launched new transportation electrification offerings that support customer adoption of EVs by addressing barriers to adoption. PNM's TEP program budget provides financial support to residential and non-residential customers towards the purchase of EV chargers and/or site make-ready costs, as well as customer education and outreach on EV-specific electricity rates to encourage charging during off-peak periods. More than 25% of the program budget is dedicated to low- and moderate-income customers to plan for an equitable transition to an electrified transportation sector.

PNM participates in the National Electric Highway Coalition, which plans to build fast-charging ports along major U.S. travel corridors. The coalition, with approximately 50 investor-owned electric companies, is committed to providing EV fast charging ports that will allow the public to drive EVs with confidence throughout the country's major roadways. To support this initiative, PNM's TEP program includes the installation of a charging network along major roadways in New Mexico.

*Renewable Energy and Energy Storage*

PNM's utility-owned solar and energy storage capacity, as well as solar, energy storage, wind, and geothermal procurements in service as of September 30, 2025, have a total net generation capacity of 2,969 MW. In addition to PNM's owned and third-party contracted solar facilities, PNM also has a customer distributed solar generation program that represented 327.9 MW and 5 MW under the Community Solar Act at September 30, 2025. The NMPRC has approved plans for PNM to procure energy and RECs from additional resources to serve retail customers and a data center located in PNM's service territory. PNM's approved resources have a generation capacity of 1,165 MW. This includes approximately 305 MW of capacity under the Community Solar Act which will allow PNM to provide customers the option of accessing solar energy.

PNM will continue to seek approval to procure renewable resources while balancing the impact to customers' electricity costs in order to meet forecasted peak load requirements to serve its customers and New Mexico's RPS and carbon-free resource requirements.

*Energy Efficiency*

Energy efficiency plays a significant role in helping to keep customers' electricity costs low while meeting their energy needs and is one of the Company's approaches to supporting environmentally responsible power. PNM's and TNMP's energy efficiency and load management portfolios continue to achieve robust results. In 2024, incremental energy saved as a result of new participation in PNM's portfolio of energy efficiency programs is estimated to be 86 GWh. This is equivalent to the annual consumption of approximately 11,891 homes in PNM's service territory. PNM's load management and annual energy efficiency programs also help lower peak demand requirements. In 2024, TNMP's incremental energy saved as a result of new participation in TNMP's energy efficiency programs is estimated to be approximately 16 GWh. This is equivalent to the annual consumption of approximately 2,211 homes' electricity use in TNMP's service territory using a national average avoided emissions rate. TNMP's high-performance homes residential new construction energy efficiency program has earned the Energy Star Partner of the Year award for 8 years, including 6 years receiving the Sustained Excellence Award, recognizing long-term commitment to fighting climate change and protecting public health through energy efficiency.

*Water Conservation and Solid Waste Reduction*

PNM continues its efforts to reduce the amount of fresh water used to make electricity (about 45% more efficient than in 2005). Continued growth in PNM's fleet of solar and wind energy sources, energy efficiency programs, and innovative uses of air-cooling technology have contributed to this reduction. Water usage has continued to decline as PNM has substituted less fresh-water-intensive generation resources to replace SJGS. As the Company moves forward with its mission to achieve 100% carbon-free generation by 2040, it expects that more significant water savings will be gained. Shutting down SJGS in 2022 and Four Corners in 2031 will allow the Company to reach our goals for reduced freshwater use at 80% by 2035 and 90% by 2040 from 2005 levels. Focusing on responsible stewardship of New Mexico's scarce water resources improves PNM's water-resilience in the face of persistent drought and ever-increasing demands for water to spur the growth of New Mexico's economy.

Table of Contents

In addition to the above areas of focus, the Company is working to reduce the amount of solid waste going to landfills through increased recycling and reduction of waste. In 2024, 21 of the Company's 22 facilities met or exceeded the solid waste diversion goal of a 65% diversion rate. The Company expects to continue to do well in this area in the future.

*Stakeholder and Community Engagement*

The Company is committed to fostering relationships with its customers, stakeholders, and communities. Through outreach, collaboration, and various community-oriented programs, the Company has demonstrated a commitment to building productive relationships with stakeholders, including customers, community partners, regulators, intervenors, legislators, and shareholders. Local relationships and one-on-one communications remain two of the most valuable ways both PNM and TNMP connect with their stakeholders. Both companies maintain long-standing relationships with governmental representatives and key electricity consumers to ensure that these stakeholders are updated on Company investments and initiatives. Key electricity consumers also have dedicated Company contacts that support their important service needs.

The Company utilizes a number of communications channels and strategic content to serve and engage its many stakeholders. PNM's website provides the details of major regulatory filings, including general rate requests, as well as the background on PNM's efforts to maintain reliability, keep prices affordable, and protect the environment. The website is also a resource for information about PNM's operations and community outreach efforts to customers on various topics such as education, outage alerts, safety, wildfire safety, customer service, community partnerships in philanthropic projects, and plans for building a sustainable energy future for New Mexico and to transition to a carbon-free generating portfolio by 2040. PNM also leverages social media to communicate about some of these topics with certain customers. TNMP's website provides information on customized energy efficiency programs and TNMP rates, in addition to other community outreach information. As discussed above, TXNM's corporate website includes a dedicated section providing additional information regarding the Company's commitment to sustainability.

Throughout 2025, PNM held in-person community events focused on wildfire safety and educating customers about the PNM's Public Safety Power Shutoff ("PSPS") process and wildfire mitigation efforts to protect the public. These gatherings are designed to share critical information, coordinate with local resources, and listen to feedback from local communities. PNM hosted four events in four High Fire Risk Areas ("HFRA"), across New Mexico, in 2025 and expects to host similar events in 2026. In addition, PNM has included local emergency managers in its periodic meetings referred to as "wildfire tabletops", in 2025. Each of these engagements builds and strengthens our preparedness as a Company, for wildfire prevention and preparedness, should such an event occur.

TXNM has a long tradition of supporting the communities that it serves in New Mexico and Texas and is committed to fostering positive relationships with stakeholders. During the three years ended December 31, 2024, corporate giving contributed $9.0 million to tribal communities and civic, educational, environmental, low income, and economic development organizations. Additionally, the PNM Resources Foundation (the "Foundation") has provided an annual average of $1.3 million in grant funding over the past three years across New Mexico and Texas. Throughout 2024, the Foundation has focused on grants for nontraditional pathways to education and grants for the environment. These grants help nonprofits innovate or sustain programs to grow and develop their mission, develop and implement environmental programs, and provide educational opportunities. The Foundation continues to expand its matching and volunteer grant programs and the annual amount of matching donations available to each of its employees. The Foundation has also approved an increase to the amount awarded to employees, through the employee crisis management fund, who have been affected by the wildfires, floods, and hurricanes. In response to the South Fork and Salt wildfires that have caused devastation in the Ruidoso and Mescalero Apache Tribe communities, PNM and the Foundation have donated to the Ruidoso Fire Emergency Action Fund, hosted by the Community Foundation of Southern New Mexico, and to the Mescalero Apache Tribe Tribal Relief Fund. PNM is also collaborating with community foundations to help support the effort and direct funds where they are most needed. To support our team members impacted by Hurricane Beryl, the Foundation has increased the employee crisis fund, which is available to help our employees with financial support for catastrophic emergencies and basic living needs during times of crises.

TXNM recognizes its responsibility to support programs and organizations that enrich the quality of life across its service territories and seeks opportunities to further demonstrate its commitment in these areas as needs arise. In response to community needs, TXNM partners with other corporate funders to support nonprofits and small businesses. TXNM also collaborates on community projects, low-income customer assistance programs, and employee volunteerism.

PNM stands out as one of the few investor-owned utilities dedicated to operating a tribal relations office, which is focused on serving and collaborating with 18 of the 23 sovereign nations in New Mexico and the Southwest. PNM created the Navajo Nation Workforce Training Scholarship Program to provide support for Navajo tribal members and to encourage the pursuit of education and training in existing and emerging jobs in the communities in which they live. PNM has invested in paid summer college engineering internship programs for American Indian students available in the greater Albuquerque area, established the PNM Pueblo Education Scholarship and Endowment to invest in higher education for Native American Indian students, and supported the development of an entrepreneur complex located in Albuquerque and operated by the Indian Pueblo Cultural Center. PNM continues to partner with the Navajo Nation in the Light up Navajo project, piloted in 2019 and modeled

Table of Contents

as a mutual aid project to connect Navajo homes without electricity to the power grid. PNM is one of 44 utilities across 16 states to participate in improving the quality of life for families by bringing electricity to over 700 homes since inception of the project. PNM has also partnered with New Mexico universities to enhance intern programs and developed a business coalition model to drive economic development through intern partnerships. PNM continues to partner with key nonprofit organizations to initiate funding and action for programs focused on diversity, equity and inclusion.

Employee volunteers are the lifeblood of a healthy corporate culture. Community giving through volunteers' time and effort is at the heart of employee engagement. Throughout 2025, the Company held large-scale volunteer events, working alongside nonprofits, schools, and vulnerable communities throughout New Mexico and Texas. More than 640 employees in both states participated in the annual "Day of Service," a workday event encouraging employee volunteerism and serving approximately 40 organizations. Throughout the year, employees volunteer their time generously through independent volunteer activities and board participation. Employees have strengthened community resilience by giving close to 4,000 volunteer hours to support the health, safety, and well-being of diverse communities.

***Financial Focus***

*Earning Authorized Returns on Regulated Businesses*

TXNM's success in accomplishing its financial objectives is highly dependent on two key factors: fair and timely regulatory treatment for its utilities and the utilities' strong operating performance. The Company has multiple strategies to achieve favorable regulatory treatment, all of which have as their foundation a focus on the basics: safety, operational excellence, and customer satisfaction, while engaging stakeholders to build productive relationships. Both PNM and TNMP seek cost recovery for their investments through general rate cases, periodic cost of service filings, and various rate riders. The rates PNM and TNMP charge customers are subject to traditional rate regulation by the NMPRC, FERC, and the PUCT. Additional information about rate filings is provided in Note 17 of the Notes to Consolidated Financial Statements in the 2024 Annual Reports on Form 10-K.

Fair and timely rate treatment from regulators is crucial to PNM and TNMP in earning their allowed returns and critical for TXNM to achieve its financial objectives. TXNM believes that earning allowed returns is viewed positively by credit rating agencies and that improvements in the Company's ratings could lower costs to utility customers.

*State Regulation and Legislation*

TNMP

In the 2023 and 2025 Texas Legislative sessions several bills were passed to support utility reliability and resiliency by encouraging and protecting utility infrastructure investments. Amongst the bills passed was DCRF legislation that adds a second filing per year and shortens the regulatory timeframe for the proceedings. Other bills include system resiliency and temporary mobile generation, which provide opportunities for added investment in TNMP's service territory and reduce uncertainty around rate recovery. Another bill directs ERCOT to develop reliability plans for the Permian Basin which could result in the need for additional investments in the West Texas service territory. Additionally, the Damaging Critical Infrastructure Bill helps protect TNMP's investments in response to criminal offenses damaging critical infrastructure facilities. HB 5247 incentivizes utilities who continue to invest in the Permian Basin territory by allowing for the deferral of costs, including depreciation expenses and carrying costs, for qualifying investments in excess of 300 percent of annual depreciation, that are not currently reflected in rates, to a regulatory asset until such time a single, annual proceeding can be filed to adjust nonfuel rates. These pieces of legislation demonstrate that Texas continues to encourage utility investment and prioritizes timely rate recovery. TNMP will look to prioritize investments aligned with these measures that improve the quality of service for current and future customers.

The regulatory framework in Texas strongly encourages investments into the grid by providing timely recovery through rate mechanisms outside of general rate cases. The PUCT has approved mechanisms that allow TNMP to recover capital invested in transmission and distribution projects without having to file a general rate case. The PUCT also approved rate riders that allow TNMP to recover amounts related to energy efficiency and third-party transmission costs. TNMP also has approximately 281,000 advanced meters across its service territory, the costs of which are being recovered through base rates.

PNM

The 2025 New Mexico Legislative session included several bills that were passed to support economic development, clean energy, grid modernization, and wildfire preparedness. Amongst the bills passed were the Strategic Economic Development Site Readiness Bill (the "Site Readiness Bill") and the New Mexico Finance Authority Definitions, Funds & Rates Bill (the "Power Readiness Bill").

The Site Readiness Bill creates a dedicated funding mechanism and a structured process for identifying, assessing, and preparing strategic economic development sites across the state, positioning New Mexico to compete with other states actively investing in site readiness. It appropriates approximately $24 million for the site readiness fund for site-characterization studies

Table of Contents

of proposed economic development sites and site preparations of strategic economic development sites. The Site Readiness Bill also creates the Strategic Economic Development Site Advisory Committee to advise the New Mexico Economic Development Department ("NMEDD") in selecting sites and awarding funding.

The Power Readiness Bill reduces risk, lead times, and regulatory uncertainty in acquiring additional generation resources and in building large-scale infrastructure needed to competitively serve economic development customers that create jobs. It allows a public utility to annually increase generation capacity by up to 10% of the public utility's total system peak load. The Power Readiness Bill also shortens the time for regulatory approval of CCN filings for new, major infrastructure and allows a public utility to defer costs of economic development projects, placing them into a regulatory asset until a customer signs a contract or begins taking service.

*The New Mexico Energy Transition Act ("ETA")*

The passage of the ETA amended the REA to require utilities operating in New Mexico to have renewable portfolios equal to 40% by 2025, 50% by 2030, 80% by 2040, and 100% zero-carbon energy by 2045. Those amendments also allow for the recovery of undepreciated investments and decommissioning costs related to qualifying EGUs that the NMPRC has required be removed from retail jurisdictional rates, provided replacement resources to be included in retail rates have lower or zero-carbon emissions. The ETA provides for a transition from fossil-fueled generating resources to renewable and other carbon-free resources by allowing utilities to issue securitized bonds related to the retirement of certain coal-fired generating facilities to qualified investors. ETBC I issued the ETBC I Securitized Bonds in November 2023 under the provisions of the ETA.

*Grid Modernization Plan*

In October 2024, the NMPRC approved PNM's Grid Modernization Plan which will improve customers' ability to customize their use of energy and ensure that customers, including low-income customers, are a top priority and will benefit from the electricity grid consistent with the Grid Modernization Statute. PNM's plan to modernize its electricity grid through infrastructure and technology improvements also increases the efficiency, reliability, resilience, and security of PNM's electric system. The approved plan includes grid modernization investments of approximately $344 million for the first six years of a broader 11-year strategy. The approved rate rider will recover capital costs, operating expenses, and taxes associated with the investments included in the plan. In June 2025, the Grid Modernization Plan was updated to reflect an increase in investments from approximately $344 million to $367 million in the first six years and a decrease in projected operations and maintenance costs by approximately 18%.

*Integrated Resource Plan*

NMPRC rules require that investor-owned utilities file an IRP every three years. The IRP is required to cover a 20-year planning period and contain an action plan covering the first three years of that period. PNM's approved 2023 IRP maintains a continued focus on a carbon-free energy system by 2040. The plan highlights the need for the significant sustained addition of resources over the next two decades, replacing retiring or expiring capacity, meeting concurrent load growth, while reducing the carbon intensity of PNM's portfolio.

In December 2024, PNM issued its 2029-2032 RFP for at least 900 MW of new energy resources to come online between 2029 and 2032, with at least 500 MW needed by 2030 and is anticipated to identify potential replacement resources for PNM's current natural gas generation capacity as well as PNM's ownership interest in Four Corners.

In July 2025, PNM gave notice to the NMPRC of its intent to file its 2026 IRP and requested to initiate its stakeholder engagement process on or about December 1, 2025, while maintaining the required 2026 IRP filing date of September 1, 2026. In its request, PNM states that the additional time would ensure there is a fully interactive and engaging stakeholder process in developing the 20-year planning period. In August 2025, the NMPRC affirmed PNM's filing deadline of September 1, 2026 regardless of the early commencement date for the facilitated stakeholder process.

*2028 Resource Application*

On November 22, 2024, PNM filed an application with the NMPRC seeking approval of two 150 MW ESAs, a 167 MW PPA for the Valencia power plant, and a CCN for a 100 MW solar facility and a 30 MW battery, with a proposed additional 20 MW option, to be available to meet summer 2028 customer needs. On March 12, 2025, PNM and intervening parties filed an unopposed comprehensive stipulation with the NMPRC which supports approval of PNM's application, including the proposed option to increase the 30 MW battery by an additional 20 MW. On June 26, 2025, the NMPRC approved the unopposed stipulation.

*PNM Rate Riders and other*

The NMPRC has approved PNM recovering fuel costs through the FPPAC, as well as rate riders for renewable energy, energy efficiency, grid modernization, and the TEP. These mechanisms allow for more timely recovery of investments.

Table of Contents

*FERC Regulation*

Rates PNM charges wholesale transmission customers are subject to traditional rate regulation by FERC. Rates charged to wholesale electric transmission customers, other than customers on the Western Spirit Line, are based on a formula rate mechanism pursuant to which rates for wholesale transmission service are calculated annually in accordance with an approved formula. The formula includes updating cost of service components, including investment in plant and operating expenses, based on information contained in PNM's annual financial report filed with FERC, as well as including projected transmission capital projects to be placed into service in the following year. The projections included are subject to true-up. Certain items, including changes to return on equity and depreciation rates, require a separate filing to be made with FERC before being included in the formula rate.

*Delivering At or Above Industry-Average Long-Term Earnings Growth*

TXNM's financial objective to deliver at or above industry-average long-term earnings growth enables investors to realize the value of their investment in the Company's business. Earnings growth is based on ongoing earnings, which is a non-GAAP financial measure that excludes from GAAP earnings certain non-recurring, infrequent, and other items that are not indicative of fundamental changes in the earnings capacity of the Company's operations. TXNM uses ongoing earnings to evaluate the operations of the Company and to establish goals, including those used for certain aspects of incentive compensation, for management and employees.

TXNM targets a dividend payout ratio in the 50% to 60% range of its ongoing earnings. The Board will continue to evaluate the dividend on an annual basis, considering sustainability and growth, capital planning, and industry standards. The Board approved the following increases in the indicated annual common stock dividend:

| Approval Date | Percent Increase |
|---|---|
| December 2023 | 5.4% |
| December 2024 | 5.2% |

Under the terms of the Merger Agreement, TXNM has agreed not to declare, set aside, make or pay any dividend or other distribution, payable in cash, stock, property or otherwise, with respect to any of its equity securities, or make any other actual, constructive or deemed dividend or distribution in respect of any of its equity securities (except (i) TXNM may continue the declaration and payment of regular quarterly cash dividends on TXNM common stock for each quarterly period ending after the date of the Merger Agreement, in an amount not to exceed $0.4275 in 2025 or 2026, with usual record and payment dates for such quarterly dividends in accordance with past dividend practice, (ii) for any cash dividend or cash distribution by a wholly-owned subsidiary of TXNM to TXNM or another wholly-owned subsidiary of TXNM, and (iii) a "stub period" dividend to holders of record of TXNM common stock as of immediately prior to the Effective Time equal to the product of (1) the number of days from the record date for payment of the last quarterly dividend paid by TXNM prior to the Effective Time, multiplied by (2) a daily dividend rate determined by dividing the amount of the last quarterly dividend paid prior to the Effective Time by ninety-one ).

*Maintaining Investment Grade Credit Ratings*

The Company is committed to maintaining investment grade issuer credit ratings in order to reduce the cost of debt financing and to help ensure access to credit markets, when required. On January 15, 2024, S&P revised TXNM, PNM, and TNMP's outlook to stable from positive. See the subheading Liquidity included in the full discussion of Liquidity and Capital Resources below for the specific credit ratings for TXNM, PNM, and TNMP. All of the credit ratings issued by both Moody's and S&P on the Company's senior debt continue to be investment grade.

**Economic Factors**

*TNMP* – In the three and nine months ended September 30, 2025, TNMP experienced an increase in volumetric weather normalized retail load of 3.5% and 3.3% compared to 2024. Weather normalized demand-based load, excluding retail transmission and data center consumers, increased 4.4% and 1.2% in the three and nine months ended September 30, 2025 compared to 2024. Data center load, including distribution and retail transmission, has increased 91.9% and 102.7% in the three and nine months ended September 30, 2025 compared to 2024.

*PNM* – In the three and nine months ended September 30, 2025, PNM experienced an increase of 3.1% and 0.8% in weather normalized residential load. Weather normalized commercial load experienced a decrease of 2.8% and an increase of 0.3% in the three and nine months ended September 30, 2025 compared to 2024. In addition, PNM experienced an increase in industrial load of 12.9% and 17.6% in the three and nine months ended September 30, 2025 compared to 2024.

Table of Contents

The Company is closely monitoring the impacts on the capital markets of other macroeconomic conditions, including actions by the Federal Reserve to address inflationary concerns and other market conditions, recently enacted federal legislation, and geopolitical activity, including the potential impacts of tariffs and the duration of the Government shutdown. The Company has not experienced, nor does it expect significant negative impacts to customer usage at PNM and TNMP resulting from these economic impacts. However, if current economic conditions worsen, the Company may be required to implement additional measures such as reducing or delaying operating and maintenance expenses and planned capital expenditures.

**Results of Operations**

Net earnings attributable to TXNM were $161.2 million, or $1.63 per diluted share, in the nine months ended September 30, 2025 compared to $226.4 million, or $2.50 per diluted share, in 2024. Among other things, earnings in the nine months ended September 30, 2025 benefited from higher transmission and distribution rates at TNMP, higher demand-based load at TNMP, higher weather normalized retail load at PNM and TNMP, increased revenue at PNM approved in the 2025 Rate Change, and higher transmission margin at PNM. These increases were more than offset by higher operating expenses at PNM and TNMP, increased depreciation at PNM and TNMP due to increased plant in service, capacity arrangements at PNM, milder weather at PNM, and higher interest charges at PNM and TNMP. Additional information on factors impacting results of operations for each segment is discussed below under Results of Operations.

**Liquidity and Capital Resources**

As of September 30, 2025, TXNM, PNM, and TNMP had revolving credit facilities with capacities of $300.0 million, $440.0 million, and $200.0 million. Total availability for TXNM on a consolidated basis was $614.0 million at October 24, 2025. The Company utilizes these credit facilities and cash flows from operations to provide funds for both construction and operational expenditures. TXNM also has intercompany loan agreements with each of its subsidiaries.

TXNM projects that its consolidated capital requirements, consisting of construction expenditures and dividends, will total $8.6 billion for 2025 - 2029, including amounts expended through September 30, 2025. These construction expenditures include TNMP's investments to support continued high growth in system demand across TNMP's service territories and growing encouragement for infrastructure investments from the Texas legislature to support grid reliability and resilience. PNM's capital initiatives include investments in transmission and distribution infrastructure to deliver clean energy, enhance customer satisfaction, and increase grid resilience. Construction expenditures also include investments proposed in PNM's Grid Modernization Plan and TNMP's SRP.

To fund capital spending requirements to meet growth that balances earnings goals, credit metrics, and liquidity needs, the Company has entered into a number of other financing arrangements. A complete listing of current financing arrangements is contained in Note 9 and Note 7 of the Notes to Consolidated Financial Statements in the 2024 Annual Reports on Form 10-K.

After considering the effects of these financings and the Company's short-term liquidity position as of October 24, 2025, the Company has consolidated maturities of long-term and short-term debt aggregating approximately $825.5 million through October 2026. In addition to internal cash generation, the Company anticipates that it will be necessary to obtain additional long-term financing in the form of debt refinancing, new debt issuances, and/or new equity, including those provided for under the Merger Agreement, in order to fund its capital requirements during the 2025-2029 period. The Company currently believes that its internal cash generation, existing credit arrangements, and access to public and private capital markets will provide sufficient resources to meet the Company's capital requirements for at least the next twelve months. As of September 30, 2025 and October 24, 2025, the Company was in compliance with its debt covenants.

Table of Contents

## RESULTS OF OPERATIONS

The following discussion and analysis should be read in conjunction with the Condensed Consolidated Financial Statements and Notes thereto. Trends and contingencies of a material nature are discussed to the extent known. Refer also to Disclosure Regarding Forward Looking Statements and to Part II, Item 1A. Risk Factors.

A summary of net earnings attributable to TXNM is as follows:

| | Three Months Ended September 30, | | | Nine Months Ended September 30, | | |
|---|---|---|---|---|---|---|
| | 2025 | 2024 | Change | 2025 | 2024 | Change |
| | (In millions, except per share amounts) | | | | | |
| Net earnings attributable to TXNM | $ 130.7 | $ 131.2 | $ (0.5) | $ 161.2 | $ 226.4 | $ (65.2) |
| Average diluted common and common equivalent shares | 107.4 | 90.6 | 16.8 | 99.0 | 90.6 | 8.4 |
| Net earnings attributable to TXNM per diluted share | $ 1.22 | $ 1.45 | $ (0.23) | $ 1.63 | $ 2.50 | $ (0.87) |

The components of the change in net earnings attributable to TXNM are:

| | Three Months Ended September 30, 2025 | Nine Months Ended September 30, 2025 |
|---|---|---|
| | (In millions) | |
| TNMP | $ 5.4 | $ 4.2 |
| PNM | (6.3) | (53.7) |
| Corporate and Other | 0.4 | (15.8) |
| Net change | $ (0.5) | $ (65.2) |

Information regarding the factors impacting TXNM's operating results by segment are set forth below.

### Segment Information

The following discussion is based on the segment methodology that TXNM's management uses for making operating decisions and assessing performance of its various business activities. See Note 2 for more information on TXNM's operating segments.

### TNMP

### Non-GAAP Financial Measures

TNMP defines utility margin as electric operating revenues less cost of energy, which consists of costs charged by third-party transmission providers. TNMP believes that utility margin provides a more meaningful basis for evaluating operations than electric operating revenues since all third-party transmission costs are passed on to consumers through a transmission cost recovery factor. Utility margin is not a financial measure required to be presented and is considered a non-GAAP measure. TNMP does not intend for utility margin to represent any financial measure as defined by GAAP however, the calculation of utility margin, as presented, most closely compares to gross margin as defined by GAAP. Reconciliations between utility margin and gross margin are presented below.

| | Three Months Ended September 30, | | | Nine Months Ended September 30, | | |
|---|---|---|---|---|---|---|
| | 2025 | 2024 | Change | 2025 | 2024 | Change |
| | (In millions) | | | | | |
| Gross margin | $ 97.3 | $ 85.1 | $ 12.2 | $ 238.7 | $ 213.9 | $ 24.8 |
| Transmission and distribution costs | 9.0 | 8.5 | 0.5 | 29.4 | 26.7 | 2.7 |
| Depreciation and amortization | 35.0 | 31.7 | 3.3 | 105.1 | 93.1 | 12.0 |
| Utility margin | $ 141.3 | $ 125.3 | $ 16.0 | $ 373.2 | $ 333.7 | $ 39.5 |

Table of Contents

The following table summarizes the operating results for TNMP:

| | Three Months Ended September 30, | | | Nine Months Ended September 30, | | |
|---|---|---|---|---|---|---|
| | 2025 | 2024 | Change | 2025 | 2024 | Change |
| | (In millions) | | | | | |
| Electric operating revenues | $ 183.4 | $ 162.7 | $ 20.7 | $ 496.9 | $ 445.9 | $ 51.0 |
| Cost of energy | 42.2 | 37.4 | 4.8 | 123.7 | 112.2 | 11.5 |
| Utility margin | 141.3 | 125.3 | 16.0 | 373.2 | 333.7 | 39.5 |
| Operating expenses | 35.6 | 35.1 | 0.5 | 105.9 | 102.0 | 3.9 |
| Depreciation and amortization | 35.0 | 31.7 | 3.3 | 105.1 | 93.1 | 12.0 |
| Operating income | 70.7 | 58.5 | 12.2 | 162.2 | 138.5 | 23.7 |
| Other income | 5.6 | 2.4 | 3.2 | 9.7 | 6.3 | 3.4 |
| Interest charges | (24.8) | (15.9) | (8.9) | (66.0) | (43.7) | (22.3) |
| Segment earnings before income taxes | 51.6 | 45.0 | 6.6 | 105.9 | 101.1 | 4.8 |
| Income (taxes) | (10.5) | (9.3) | (1.2) | (21.5) | (20.9) | (0.6) |
| Segment earnings | $ 41.1 | $ 35.7 | $ 5.4 | $ 84.4 | $ 80.2 | $ 4.2 |

The following table shows total sales, including the impacts of weather, by retail tariff consumer class and average number of consumers:

| | Three Months Ended September 30, | | | Nine Months Ended September 30, | | |
|---|---|---|---|---|---|---|
| | 2025 | 2024 | Percentage Change | 2025 | 2024 | Percentage Change |
| Volumetric load [1] (GWh) | | | | | | |
| Residential | 1,074.6 | 1,070.1 | 0.4 % | 2,620.8 | 2,544.8 | 3.0 % |
| Commercial and other | 12.7 | 13.4 | (5.2) | 36.3 | 37.0 | (1.9) |
| Total volumetric load | 1,087.3 | 1,083.5 | 0.4 % | 2,657.1 | 2,581.8 | 2.9 % |
| Demand-based load [2] (MW) | 10,353.6 | 7,593.6 | 36.3 % | 29,185.2 | 23,117.5 | 26.2 % |
| Average retail consumers (thousands) [3] | 282.7 | 277.6 | 1.8 % | 281.5 | 276.4 | 1.8 % |

[1] Volumetric load consumers are billed on KWh usage.
[2] Demand-based load includes consumers billed on monthly KW peak and also includes retail transmission customers that are primarily billed under rate riders.
[3] TNMP provides transmission and distribution services to REPs that provide electric service to customers in TNMP's service territories. The number of consumers above represents the customers of these REPs. Under TECA, consumers in Texas have the ability to choose any REP to provide energy.

*Operating Results – Three Months Ended September 30, 2025, compared to 2024*

The following table summarizes the significant changes to gross margin:

| | Three Months Ended September 30, 2025 Change |
|---|---|
| *Gross margin:* | (In millions) |
| Utility margin (see below) | $ 16.0 |
| Depreciation and amortization (see below) | (3.3) |
| Higher outside services and employee related expenses, partially offset by lower vegetation management expenses, excluding administrative costs | (0.3) |
| Other | (0.2) |
| Net Change | $ 12.2 |

Table of Contents

The following table summarizes the significant changes to utility margin:

| | Three Months Ended September 30, 2025 Change |
|---|---|
| *Utility margin:* | (In millions) |
| *Transmission rate relief/load* – Transmission cost of service rate increases in September 2024, March 2025, and September 2025, partially offset by a decrease in ERCOT approved demand | $ 3.8 |
| *Distribution rate relief* – Distribution cost of service rate increases in July 2024, November 2024, and June 2025 | 11.3 |
| *Volumetric-based consumer usage/load* – Weather normalized KWh sales increased 3.5%; the number of volumetric consumers increased 1.8% | 1.1 |
| *Demand-based consumer usage/load* – Weather normalized demand-based MW sales for large commercial and industrial consumers excluding retail transmission consumers increased 3.7% | 0.6 |
| *Weather* – Milder weather in Q3 2025 | (1.0) |
| Decrease in deferral of excess deferred income tax benefits refunded through base rates | (1.1) |
| *Rate Riders and other* – Includes transmission cost recovery factor and energy efficiency rider which are partially offset in operating expenses | 1.3 |
| Net Change | $ 16.0 |

The following tables summarize the primary drivers for changes in operating expenses, depreciation and amortization, other income (deductions), interest charges, and income taxes:

| | Three Months Ended September 30, 2025 Change |
|---|---|
| *Operating expenses:* | (In millions) |
| Lower vegetation management expenses, partially offset by higher outside services and employee related expenses | $ (0.5) |
| Higher capitalization of administrative and general expenses due to higher construction expenditures | (0.3) |
| Higher property tax due to increased utility plant in service | 0.6 |
| Costs related to the Merger | 0.7 |
| Net Change | $ 0.5 |

| | |
|---|---|
| *Depreciation and amortization:* | |
| Increased utility plant in service | $ 4.7 |
| Deferred depreciation related to HB 5247 (Note 12) | (1.6) |
| Other | 0.2 |
| Net Change | $ 3.3 |

| | |
|---|---|
| *Other income (deductions):* | |
| Lower CIAC | $ (0.4) |
| Higher equity AFUDC | 1.4 |
| Interest on Texas Sales and Use Tax refund | 2.1 |
| Other | 0.1 |
| Net Change | $ 3.2 |

Table of Contents

| | Three Months Ended September 30, 2025 Change |
|---|---|
| *Interest charges:* | (In millions) |
| TNMP Merger Backstop Term Loan (Note 9) | $ (3.4) |
| Loss on reacquired debt | (3.7) |
| Interest on FMBs | (2.3) |
| Lower interest on revolving short-term borrowings | 0.7 |
| Lower debt AFUDC | (0.2) |
| Net Change | $ (8.9) |

| | |
|---|---|
| *Income (taxes) benefits:* | |
| Higher segment earnings before income taxes | $ (1.4) |
| Higher amortization of excess deferred income taxes | 0.1 |
| Impacts of higher equity AFUDC | 0.3 |
| Other | (0.2) |
| Net Change | $ (1.2) |

*Operating Results – Nine Months Ended September 30, 2025 compared to 2024*

The following table summarizes the significant changes to gross margin:

| | Nine Months Ended September 30, 2025 Change |
|---|---|
| *Gross margin:* | (In millions) |
| Utility margin (see below) | $ 39.5 |
| Depreciation and amortization (see below) | (12.0) |
| Higher employee related, outside services, and vegetation management expenses, excluding administrative costs | (2.4) |
| Other | (0.3) |
| Net Change | $ 24.8 |

The following table summarizes the significant changes to utility margin:

| | Nine Months Ended September 30, 2025 Change |
|---|---|
| *Utility margin:* | (In millions) |
| *Transmission rate relief/load* – Transmission cost of service rate increases in March 2024, September 2024, March 2025, and September 2025, partially offset by a decrease in ERCOT approved demand | $ 7.4 |
| *Distribution rate relief* – Distribution cost of service rate increases in July 2024, November 2024, and June 2025 | 23.9 |
| *Volumetric-based consumer usage/load* – Weather normalized KWh sales increased 3.3%; the number of volumetric consumers increased 1.8% | 2.2 |
| *Demand-based consumer usage/load* – Weather normalized demand-based MW sales for large commercial and industrial consumers excluding retail transmission consumers increased 5.5% | 4.4 |
| *Leap Year* - Decrease in revenue due to additional day in 2024 | (0.3) |
| *Weather* – Colder weather in the first quarter of 2025 was partially offset by milder weather in the second and third quarters of 2025 | 0.3 |
| Decrease in deferral of excess deferred income tax benefits refunded through base rates | (1.3) |
| *Rate Riders and other* – Includes transmission cost recovery factor and energy efficiency rider which are partially offset in operating expenses | 2.9 |
| Net Change | $ 39.5 |

Table of Contents

The following tables summarize the primary drivers for changes in operating expenses, depreciation and amortization, other income (deductions), interest charges, and income taxes:

| | Nine Months Ended September 30, 2025 Change |
|---|---|
| *Operating expenses:* | (In millions) |
| Higher employee related, outside services, and vegetation management expenses | $ 2.3 |
| Higher property taxes due to increased utility plant in service | 1.9 |
| Higher capitalization of administrative and general expenses due to higher construction expenditures | (4.0) |
| Higher allocated depreciation and amortization expense from Corporate and Other | 0.6 |
| Higher insurance premiums primarily related to wildfire risk | 2.3 |
| Costs related to the Merger | 0.9 |
| Other | (0.1) |
| Net Change | $ 3.9 |

| | |
|---|---|
| *Depreciation and amortization:* | |
| Increased utility plant in service | $ 14.1 |
| Deferred depreciation related to HB 5247 (Note 12) | (2.2) |
| Other | 0.1 |
| Net Change | $ 12.0 |

| | |
|---|---|
| *Other income (deductions):* | |
| Lower CIAC | $ (1.0) |
| Higher equity AFUDC | 1.9 |
| Interest on Texas Sales and Use Tax refund | 2.1 |
| Other | 0.4 |
| Net Change | $ 3.4 |

| | |
|---|---|
| *Interest charges:* | |
| TNMP Merger Backstop Term Loan (Note 9) | $ (4.7) |
| Loss on reacquired debt | (9.0) |
| Interest on FMBs | (9.0) |
| Higher interest on revolving short-term borrowings | (0.8) |
| Higher debt AFUDC | 1.4 |
| Other | (0.2) |
| Net Change | $ (22.3) |

| | |
|---|---|
| *Income (taxes) benefits:* | |
| Higher segment earnings before income taxes | $ (1.0) |
| Higher amortization of excess deferred federal income taxes | (0.2) |
| Impacts of higher equity AFUDC | 0.4 |
| Other | 0.2 |
| Net Change | $ (0.6) |

Table of Contents

**PNM**

**Non-GAAP Financial Measures**

PNM defines utility margin as electric operating revenues less cost of energy, which consists primarily of fuel and purchase power costs. PNM believes that utility margin provides a more meaningful basis for evaluating operations than electric operating revenues since substantially all fuel and purchase power costs are offset in revenues as those costs are passed through to customers under PNM's FPPAC. Utility margin is not a financial measure required to be presented and is considered a non-GAAP measure. PNM does not intend for utility margin to represent any financial measure as defined by GAAP however, the calculation of utility margin, as presented, most closely compares to gross margin as defined by GAAP.
Reconciliations between utility margin and gross margin are presented below.

| | Three Months Ended September 30, | | | Nine Months Ended September 30, | | |
|---|---|---|---|---|---|---|
| | 2025 | 2024 | Change | 2025 | 2024 | Change |
| | (In millions) | | | | | |
| Gross margin | $ 210.2 | $ 212.2 | $ (2.0) | $ 423.9 | $ 457.8 | $ (33.9) |
| Energy production costs | 21.2 | 21.3 | (0.1) | 71.8 | 68.1 | 3.7 |
| Transmission and distribution costs | 18.1 | 15.1 | 3.0 | 49.7 | 44.8 | 4.9 |
| Depreciation and amortization | 61.4 | 56.4 | 5.0 | 181.9 | 163.9 | 18.0 |
| Utility margin | $ 310.9 | $ 305.0 | $ 5.9 | $ 727.3 | $ 734.6 | $ (7.3) |

The following table summarizes the operating results for PNM:

| | Three Months Ended September 30, | | | Nine Months Ended September 30, | | |
|---|---|---|---|---|---|---|
| | 2025 | 2024 | Change | 2025 | 2024 | Change |
| | (In millions) | | | | | |
| Electric operating revenues | $ 463.7 | $ 406.5 | $ 57.2 | $ 1,135.5 | $ 1,048.3 | $ 87.2 |
| Cost of energy | 152.9 | 101.5 | 51.4 | 408.1 | 313.7 | 94.4 |
| Utility margin | 310.9 | 305.0 | 5.9 | 727.3 | 734.6 | (7.3) |
| Operating expenses | 114.1 | 114.6 | (0.5) | 342.0 | 327.6 | 14.4 |
| Depreciation and amortization | 61.4 | 56.4 | 5.0 | 181.9 | 163.9 | 18.0 |
| Operating income | 135.4 | 134.0 | 1.4 | 203.4 | 243.1 | (39.7) |
| Other income (deductions) | 17.3 | 26.0 | (8.7) | 47.1 | 59.4 | (12.2) |
| Interest charges | (33.8) | (27.9) | (5.9) | (95.6) | (78.8) | (16.8) |
| Segment earnings before income taxes | 118.9 | 132.1 | (13.2) | 154.9 | 223.6 | (68.7) |
| Income (taxes) benefit | (10.9) | (18.3) | 7.4 | (13.3) | (29.9) | 16.6 |
| Valencia non-controlling interest | (5.5) | (5.1) | (0.4) | (13.5) | (11.9) | (1.6) |
| Preferred stock dividend requirements | (0.1) | (0.1) | — | (0.4) | (0.4) | — |
| Segment earnings | $ 102.4 | $ 108.7 | $ (6.3) | $ 127.7 | $ 181.4 | $ (53.7) |

The following table shows total GWh sales, including the impacts of weather, by customer class and average number of customers:

| | Three Months Ended September 30, | | | Nine Months Ended September 30, | | |
|---|---|---|---|---|---|---|
| | 2025 | 2024 | Percentage Change | 2025 | 2024 | Percentage Change |
| | (Gigawatt hours, except customers) | | | | | |
| Residential | 1,020.6 | 1,023.2 | (0.3)% | 2,565.4 | 2,593.9 | (1.1)% |
| Commercial | 1,036.6 | 1,089.7 | (4.9) | 2,789.1 | 2,816.2 | (1.0) |
| Industrial [1] | 646.6 | 532.5 | 21.4 | 1,830.4 | 1,517.9 | 20.6 |
| Public authority | 65.0 | 65.7 | (1.1) | 169.2 | 159.4 | 6.1 |
| Economy energy service [2] | 82.9 | 101.5 | (18.3) | 331.7 | 387.3 | (14.4) |
| Other sales for resale [3] | 1,094.0 | 445.7 | 145.5 | 3,102.8 | 2,419.4 | 28.2 |
| | 3,945.7 | 3,258.3 | 21.1 % | 10,788.6 | 9,894.1 | 9.0 % |
| Average retail customers (thousands) | 556.6 | 552.9 | 0.7 % | 556.1 | 552.2 | 0.7 % |

[1] Includes energy provided by PNM for renewable energy resources to match the energy and capacity requirements of Meta data center. PNM purchases renewable energy which is passed through to Meta under a rate rider. A special service

Table of Contents

rate is applied to Meta's energy consumption in those hours of the month when their consumption exceeds the energy production from the renewable resources.
(2) PNM purchases energy for a large customer on the customer's behalf and delivers the energy to the customer's location through PNM's transmission system. PNM charges the customer for the cost of the energy as a direct pass through to the customer with only a minor impact in utility margin resulting from providing ancillary services.
(3) Includes sales for resale activity resulting from PNM's participation in the EIM.

*Operating Results – Three Months Ended September 30, 2025, compared to 2024*

The following table summarizes the significant changes to gross margin:

| | Three Months Ended September 30, 2025 Change |
|---|---|
| *Gross margin:* | (In millions) |
| Utility margin (see below) | $ 5.9 |
| Depreciation and amortization (see below) | (5.0) |
| Higher plant maintenance costs at PVNGS and Four Corners, partially offset by lower costs at gas fired plants | (0.7) |
| Higher outside services and vegetation management expenses, excluding administrative costs | (2.5) |
| Other | 0.3 |
| Net Change | $ (2.0) |

The following table summarizes the significant changes to utility margin:

| | Three Months Ended September 30, 2025 Change |
|---|---|
| *Utility margin:* | (In millions) |
| *Retail customer usage/load* – Weather normalized retail KWh sales increased 3.1% for residential customers and 12.9% for industrial customers, partially offset by decreased sales to commercial customers of 2.8% | $ 5.2 |
| *Weather* – Milder weather in 2025 | (6.3) |
| *Rate relief* – Increase in revenue approved in 2025 Rate Change | 14.0 |
| *Transmission* – Increase in revenues due to higher formula rates | 3.0 |
| *Capacity arrangements* – Additional energy storage agreements starting in the fourth quarter of 2024 and sales agreements in 2024, partially offset with sales agreement in 2025 | (10.8) |
| *Rate riders and other* – Includes renewable energy, FPPAC, energy efficiency, energy transition charge, and transportation electrification riders which are partially offset in operating expenses, depreciation and amortization, other income (deductions), and interest charges | 0.8 |
| Net Change | $ 5.9 |

Table of Contents

The following tables summarize the primary drivers for changes in operating expenses, depreciation and amortization, other income (deductions), interest charges, and income taxes:

| | Three Months Ended September 30, 2025 Change |
|---|---|
| *Operating expenses:* | (In millions) |
| Higher costs at PVNGS and Four Corners partially offset with lower costs at gas plants | $ 1.9 |
| Higher outside services and vegetation management expenses partially offset by lower employee related expenses | 1.6 |
| Higher property taxes associated with increased utility plant in service | 1.4 |
| Unrecoverable portion of Four Corners Coal Mine reclamation remeasurement related to the capped surface mine liability in 2025 (Note 11) | (0.9) |
| Unrecoverable portion of San Juan Coal Mine reclamation remeasurement related to the capped surface mine liability in 2024 and 2025 (Note 11) | (5.9) |
| Higher costs associated with rate riders included in utility margin | 0.8 |
| Other | 0.6 |
| Net Change | $ (0.5) |
| *Depreciation and amortization:* | |
| Increased utility plant in service | $ 4.3 |
| Amortization related to ETBC I Securitized Costs, offset in utility margin | 0.5 |
| Other | 0.2 |
| Net Change | $ 5.0 |
| *Other income (deductions):* | |
| Decreased performance on investment securities in the NDT and coal mine reclamation trusts | $ (2.4) |
| Lower interest income and higher trust expenses related to investment securities in the NDT and coal mine reclamation trusts | (1.0) |
| Lower equity AFUDC | (1.1) |
| Higher non-service post-retirement benefit costs | (0.8) |
| Interest related to the 2024 NTEC agreement (Note 12) | (4.3) |
| Other | 0.9 |
| Net Change | $ (8.7) |
| *Interest charges:* | |
| Higher interest on term loans | $ (2.2) |
| Interest on SUNs | (5.3) |
| Higher interest on revolving short-term borrowings | (0.5) |
| Lower interest on transmission interconnection and security deposit arrangements | 1.4 |
| Higher debt AFUDC | 0.7 |
| Net Change | $ (5.9) |
| *Income (taxes) benefits:* | |
| Lower segment earnings before income taxes | $ 3.5 |
| Higher amortization of federal excess deferred income taxes | 5.0 |
| Impacts of lower equity AFUDC | (0.6) |
| Other | (0.5) |
| Net Change | $ 7.4 |

Table of Contents

*Operating Results – Nine Months Ended September 30, 2025 compared to 2024*

The following table summarizes the significant changes to gross margin:

| *Gross margin:* | Nine Months Ended September 30, 2025 Change |
|---|---|
| | (In millions) |
| Utility margin (see below) | $ (7.3) |
| Depreciation and amortization (see below) | (18.0) |
| Higher plant maintenance costs at Four Corners and gas fired plants, partially offset by lower costs at PVNGS | (3.3) |
| Higher employee related, outside services and vegetation management expenses, excluding administrative costs | (4.4) |
| Other | (0.9) |
| Net Change | $ (33.9) |

The following table summarizes the significant changes to utility margin:

| *Utility margin:* | Nine Months Ended September 30, 2025 Change |
|---|---|
| | (In millions) |
| *Retail customer usage/load* – Weather normalized retail KWh sales increased 0.8% for residential customers, 0.3% for commercial customers and 17.6% for industrial customers | $ 10.6 |
| *Weather* – Milder weather in 2025 | (7.4) |
| *Rate relief* – Increase in revenue approved in 2025 Rate Change | 14.0 |
| *Leap Year* – Decrease in revenue due to additional day in 2024 | (1.9) |
| *Transmission* – Increase in revenues primarily due to higher formula rates, partially offset by higher expense and lower market prices and volumes | 1.3 |
| *Capacity arrangements* – Additional energy storage agreements starting in the fourth quarter of 2024 and sales agreements in 2024, partially offset with sales agreement in 2025 | (30.9) |
| *Rate riders and other* – Includes renewable energy, FPPAC, energy efficiency, energy transition charge, and transportation electrification riders which are partially offset in operating expenses, depreciation and amortization, other income (deductions), and interest charges | 7.0 |
| Net Change | $ (7.3) |

Table of Contents

The following tables summarize the primary drivers for changes in operating expenses, depreciation and amortization, other income (deductions), interest charges, and income taxes:

| | Nine Months Ended September 30, 2025 Change |
|---|---|
| *Operating expenses:* | (In millions) |
| Higher costs at Four Corners and gas fired plants partially offset with lower costs at PVNGS | $ 6.7 |
| Higher outside services and vegetation management expenses offset by lower employee related expenses | 1.8 |
| Higher insurance premiums primarily related to wildfire risk | 5.0 |
| Higher property taxes associated with increased utility plant in service | 4.2 |
| Higher allocated depreciation and amortization expense from Corporate and Other | 1.3 |
| Higher allocated charitable contributions from Corporate and Other related to the 2025 Rate Request | 1.5 |
| Unrecoverable portion of San Juan Coal Mine reclamation remeasurement related to the capped surface mine liability in 2024 (Note 11) | (10.4) |
| Unrecoverable portion of Four Corners Coal Mine reclamation remeasurement related to the capped surface mine liability in 2025 (Note 11) | (0.9) |
| Higher costs associated with rate riders included in utility margin | 4.1 |
| Other | 1.1 |
| Net Change | $ 14.4 |

| | |
|---|---|
| *Depreciation and amortization:* | |
| Increased utility plant in service | $ 15.4 |
| Amortization related to ETBC I Securitized Costs, offset in utility margin | 2.3 |
| Other | 0.3 |
| Net Change | $ 18.0 |

| | |
|---|---|
| *Other income (deductions):* | |
| Increased performance on investment securities in the NDT and coal mine reclamation trusts | $ 1.4 |
| Lower interest income and higher trust expenses related to investment securities in the NDT and coal mine reclamation trust | (3.4) |
| Lower equity AFUDC | (4.5) |
| Higher non-service post-retirement benefit costs | (2.3) |
| Interest related to the 2024 NTEC agreement (Note 12) | (4.3) |
| Other | 0.9 |
| Net Change | $ (12.2) |

| | |
|---|---|
| *Interest charges:* | |
| Higher interest on term loans | $ (10.4) |
| Higher interest related to remarketed PCRBs in June 2024 | (1.6) |
| Interest on SUNs | (8.3) |
| Higher interest on revolving short-term borrowings | (2.9) |
| Lower interest on transmission interconnection and security deposit arrangements | 3.5 |
| Higher debt AFUDC | 2.7 |
| Other | 0.2 |
| Net Change | $ (16.8) |

Table of Contents

| | Nine Months Ended September 30, 2025 Change |
|---|---|
| *Income (taxes) benefits:* | (In millions) |
| Lower segment earnings before income taxes | $ 17.8 |
| Higher amortization of federal excess deferred income taxes | 0.9 |
| Impacts of lower equity AFUDC | (1.5) |
| Other | (0.6) |
| Net Change | $ 16.6 |

**Corporate and Other**

The table below summarizes the operating results for Corporate and Other:

| | Three Months Ended September 30, | | | Nine Months Ended September 30, | | |
|---|---|---|---|---|---|---|
| | 2025 | 2024 | Change | 2025 | 2024 | Change |
| | | | (In millions) | | | |
| Electric operating revenues | $ — | $ — | $ — | $ — | $ — | $ — |
| Cost of energy | — | — | — | — | — | — |
| Utility margin | — | — | — | — | — | — |
| Operating expenses | (5.4) | (7.8) | 2.4 | (9.7) | (23.7) | 14.0 |
| Depreciation and amortization | 8.7 | 9.2 | (0.5) | 27.8 | 27.9 | (0.1) |
| Operating (loss) | (3.3) | (1.4) | (1.9) | (18.1) | (4.2) | (13.9) |
| Other income (deductions) | (0.4) | — | (0.4) | (2.2) | (15.2) | 13.0 |
| Interest charges | (11.6) | (15.9) | 4.3 | (44.1) | (46.7) | 2.6 |
| Segment (loss) before income taxes | (15.3) | (17.3) | 2.0 | (64.4) | (66.1) | 1.7 |
| Income (taxes) benefit | 2.4 | 4.1 | (1.7) | 13.5 | 31.0 | (17.5) |
| Segment (loss) | $ (12.8) | $ (13.2) | $ 0.4 | $ (50.9) | $ (35.1) | $ (15.8) |

Corporate and Other operating expenses shown above are net of amounts allocated to PNM and TNMP under shared services agreements. The amounts allocated include certain expenses shown as depreciation and amortization and other income (deductions) in the table above. The change in operating expense for the three and nine months ended September 30, 2025 includes increases of $2.6 million and $15.3 million in costs related to the Merger. Substantially all depreciation and amortization expense is offset in operating expenses as a result of allocation of these costs to other business segments.

*Operating Results – Three Months Ended September 30, 2025 compared to 2024*

The following tables summarize the primary drivers for changes in other income (deductions), interest charges, and income taxes:

| | Three Months Ended September 30, 2025 Change |
|---|---|
| *Other income (deductions):* | (In millions) |
| Higher charitable contributions allocated to PNM | $ (0.3) |
| Other | (0.1) |
| Net Change | $ (0.4) |

| | |
|---|---|
| *Interest charges:* | |
| Lower interest on short-term borrowings | $ 1.5 |
| Lower interest on term loans | 2.8 |
| Net Change | $ 4.3 |

Table of Contents

| | Three Months Ended September 30, 2025 Change |
|---|---|
| *Income (taxes) benefits:* | (In millions) |
| Lower segment loss before income taxes | $ (0.5) |
| Impact of difference in effective tax rates used by TXNM and its subsidiaries in the calculation of income taxes in interim periods | (1.4) |
| Other | 0.2 |
| Net Change | $ (1.7) |

*Operating Results – Nine Months Ended September 30, 2025 compared to 2024*

The following tables summarize the primary drivers for changes in other income (deductions), interest charges, and income taxes:

| | Nine Months Ended September 30, 2025 Change |
|---|---|
| *Other income (deductions):* | (In millions) |
| Sale of NMRD equity method investment in 2024 | $ 15.1 |
| Higher charitable contributions allocated to PNM | (1.8) |
| Other | (0.3) |
| Net Change | $ 13.0 |

| | |
|---|---|
| *Interest charges:* | |
| Issuance of $550.0 million Convertible Notes | $ (14.1) |
| Lower interest on short-term borrowings | 0.8 |
| Lower interest on term loans | 15.9 |
| Net Change | $ 2.6 |

| | |
|---|---|
| *Income (taxes) benefits:* | |
| Lower segment loss before income taxes | $ (0.4) |
| Impact of difference in effective tax rates used by TXNM and its subsidiaries in the calculation of income taxes in interim periods | (1.6) |
| Investment Tax Credits related to the sale of NMRD in 2024 | (15.7) |
| Other | 0.2 |
| Net Change | $ (17.5) |

## LIQUIDITY AND CAPITAL RESOURCES

**Statements of Cash Flows**

The changes in TXNM's cash flows for the nine months ended September 30, 2025, compared to September 30, 2024, are summarized as follows:

| | Nine Months Ended September 30, | | |
|---|---|---|---|
| | 2025 | 2024 | Change |
| Net cash flows from (used in): | (In millions) | | |
| Operating activities | $ 426.8 | $ 349.5 | $ 77.3 |
| Investing activities | (890.5) | (805.9) | (84.6) |
| Financing activities | 481.6 | 468.8 | 12.8 |
| Net change in cash, cash equivalents, and restricted cash | $ 17.9 | $ 12.5 | $ 5.4 |

Table of Contents

*Cash Flows from Operating Activities*

Changes in TXNM's cash flow from operating activities result from net earnings, adjusted for items impacting earnings that do not provide or use cash. See Results of Operations above. Certain changes in assets and liabilities resulting from normal operations, including the effects of the seasonal nature of the Company's operations, also impact operating cash flows.

*Cash Flows from Investing Activities*

The changes in TXNM's cash flows used in investing activities relate primarily to changes in utility plant additions. Cash flows from investing activities include purchases and sales of investment securities in the NDT, SJGS decommissioning trust, and coal mine reclamation trusts as well as the sale of NMRD on February 27, 2024. Major components of TXNM's cash inflows and (outflows) from investing activities are shown below:

| | Nine Months Ended September 30, | | |
|---|---|---|---|
| | 2025 | 2024 | Change |
| **Cash (Outflows) for Utility Plant Additions** | (In millions) | | |
| PNM: | | | |
| Generation | $ (135.8) | $ (97.1) | $ (38.7) |
| Transmission and distribution | (296.4) | (381.7) | 85.3 |
| Nuclear fuel | (14.9) | (14.6) | (0.3) |
| | (447.1) | (493.4) | 46.3 |
| TNMP: | | | |
| Transmission | (156.4) | (110.3) | (46.1) |
| Distribution | (244.4) | (282.6) | 38.2 |
| | (400.8) | (392.9) | (7.9) |
| Corporate and Other: | | | |
| Computer hardware, software, general services, and other | (38.2) | (19.2) | (19.0) |
| | (886.1) | (905.5) | 19.4 |
| **Other Cash Flows from Investing Activities** | | | |
| Proceeds from sale of plant assets | $ — | $ 2.8 | $ (2.8) |
| Proceeds from sales of investment securities | 440.7 | 745.6 | (304.9) |
| Purchases of investment securities | (445.1) | (756.6) | 311.5 |
| Proceeds from sale of NMRD | — | 116.9 | (116.9) |
| Investments in NMRD | — | (12.6) | 12.6 |
| Other, net | — | 3.5 | (3.5) |
| | (4.4) | 99.6 | (104.0) |
| Net cash flows used in investing activities | $ (890.5) | $ (805.9) | $ (84.6) |

*Cash Flows from Financing Activities*

The changes in TXNM's cash flows from financing activities include:

- Short-term borrowings decreased $295.5 million in 2025 compared to an increase of $197.1 million in 2024, resulting in a net decrease in cash flows from financing activities of $492.6 million
- In 2025, TNMP issued $140.0 million aggregate principal amount of TNMP February 2025 Bonds and used the proceeds to repay borrowings under the TNMP Revolving Credit Facility, to fund capital expenditures, and for other corporate purposes
- In 2025, TNMP offered to prepay an aggregate $1,505.0 million of outstanding TNMP FMBs as a result of the signing of the Merger Agreement. TNMP drew $1,084.3 million on the TNMP Merger Backstop Term Loan to fund the prepayment of the validly-tendered bonds
- In 2025, TNMP issued the TNMP July 2025 FMBs to institutional investors and used the proceeds to repay the $1,084.3 million drawn under the TNMP Merger Backstop Term Loan
- In 2025, PNM entered into the PNM 2025 Term Loan for $195.0 million and used the proceeds to repay borrowings under the PNM Revolving Credit Facility, the PNM New Mexico Credit Facility, and for other corporate purposes
- In 2025, PNM issued $300.0 million aggregate principal amount of PNM April 2025 SUNs and used the proceeds to repay existing indebtedness, including the $104.0 million of SUNs that were due in May 2025, to fund capital expenditures, and for other corporate purposes

Table of Contents

- In 2025, PNM issued $350.0 million aggregate principal amount of PNM July 2025 SUNs and used the proceeds to repay existing indebtedness, including the $250.0 million of SUNs that were due in August 2025, and for other corporate purposes
- In 2025, TXNM physically settled all remaining shares under the TXNM 2024 ATM Program by issuing 1.1 million shares of TXNM common stock aggregating net proceeds of $49.6 million that were used to repay borrowings under the TXNM Revolving Credit Facility
- In 2025, TXNM repaid $51.0 million in borrowings under the TXNM 2021 Delayed Draw Term Loan
- In 2025, TXNM sold 8,000,000 shares of TXNM common stock in a private placement transaction aggregating $400.0 million and used the proceeds to make a cash equity contribution of $160.0 million to TNMP, to repay borrowings under the TXNM Revolving Credit Facility, and for general corporate purposes
- In 2025, TXNM sold 3,615,003 shares of TXNM common stock in a private placement transaction aggregating $200.0 million and used the proceeds to repay an equal amount of the TXNM 2023 Term Loan
- In 2025, TXNM issued 3.5 million shares of TXNM common stock sold under the TXNM 2025 ATM Program, aggregating net proceeds of $198.0 million that was used to repay borrowings under the TXNM Revolving Credit Facility and for other corporate purposes
- In 2025, TXNM repaid the remaining $210.0 million in borrowings under the TXNM 2023 Term Loan

**Financing Activities**

See Note 7 of the Notes to Consolidated Financial Statements in the 2024 Annual Reports on Form 10-K and Note 9 for additional information concerning the Company's financing activities. PNM must obtain NMPRC approval for any financing transaction having a maturity of more than 18 months. In addition, PNM files its annual informational financing filing and short-term financing plan with the NMPRC.

The Company's ability to access the credit and capital markets at a reasonable cost is largely dependent upon its:

- Ability to earn a fair return on equity
- Results of operations
- Ability to obtain required regulatory approvals
- Conditions in the financial markets
- Credit ratings

The Company is closely monitoring the impacts on the capital markets of other macroeconomic conditions, including actions by the Federal Reserve to address inflationary concerns or other market conditions, and geopolitical activity, including the potential impacts of tariffs. The Company currently believes it has adequate liquidity but cannot predict the effects of any of these macroeconomic conditions on the global, national, or local economy, including the Company's ability to access capital in the financial markets, or on the Company's financial position, results of operations, and cash flows.

Each of the Company's revolving credit facilities and term loans contain a single financial covenant that requires the maintenance of a debt-to-capitalization ratio. For the TXNM agreements, this ratio must be maintained at less than or equal to 70%, and for the PNM and TNMP agreements, this ratio must be maintained at less than or equal to 65%. The Company's revolving credit facilities, term loans, and other debt agreements generally also contain customary covenants, events of default, cross-default provisions, and change-of-control provisions. The Company is in compliance with its debt covenants.

In January 2025, PNM entered into the PNM 2025 Term Loan. PNM used the proceeds of the PNM 2025 Term Loan to repay borrowings under the PNM Revolving Credit Facility, the PNM New Mexico Credit Facility, and for general corporate purposes. The PNM 2025 Term Loan bears interest at a variable rate, which was 5.14% at September 30, 2025, and must be repaid on or before July 21, 2026.

In February 2025, TNMP entered into the TNMP February 2025 Bond Purchase Agreement for the sale of $140.0 million aggregate principal amount of the TNMP February 2025 Bonds. TNMP issued all $140.0 million at a 5.19% interest rate, due April 1, 2031. The proceeds were used to repay borrowings under the TNMP Revolving Credit Facility, for funding of capital expenditures, and for other corporate purposes.

In April 2025, PNM entered into the PNM April 2025 Note Purchase Agreement with institutional investors for the sale and issuance of $300.0 million aggregate principal amount of the PNM April 2025 SUNs, offered in private placement transactions. The PNM April 2025 SUNs were issued on April 23, 2025 in two series. PNM issued $125.0 million of the PNM April 2025 SUNs at 5.75%, due June 1, 2032, and another $175.0 million at 6.13%, due June 1, 2037. Proceeds from the PNM April 2025 SUNs were used for the repayment of existing indebtedness, funding of capital expenditures, and general corporate purposes.

In May 2025, TXNM paid the remaining balance due under its TXNM 2021 Delayed Draw Term Loan in accordance with its terms.

Table of Contents

In May 2025, TXNM physically settled all shares under the TXNM 2024 ATM Program by issuing 1,104,641 shares to the forward purchasers, aggregating net proceeds of $49.6 million, including $0.5 million for equity issuance costs. TXNM used the proceeds from the settled shares to repay borrowings under the TXNM Revolving Credit Facility. Following this settlement, no additional shares of TXNM's common stock remain subject to future settlement under the TXNM 2024 ATM Program.

In May 2025, the execution of the Merger Agreement constituted a "Change of Control" under certain TXNM and TNMP debt agreements. Under each of the specified debt agreements, a "Change of Control" constitutes an "Event of Default," pursuant to which the lender parties thereto had the right to accelerate the indebtedness under the debt agreements. The definition of Change of Control under the PNM debt agreements and PNM note purchase agreements are not triggered by the execution of the Merger Agreement.

In May 2025, TXNM entered the May 2025 Stock Purchase Agreement whereby TXNM sold, in a private placement transaction, 8,000,000 shares of TXNM common stock for a purchase price of $50.00 per share (aggregating $400.0 million). The consummation of the May 2025 Stock Purchase Agreement occurred on June 2, 2025. TXNM used the proceeds to make a cash equity contribution of $160.0 million to TNMP, to repay borrowings under the TXNM Revolving Credit Facility, and for general corporate purposes.

To ensure sufficient liquidity, TXNM entered into the TXNM Merger Backstop Revolving Facility to provide liquidity in the event TXNM was unable to obtain the Lender Consents. The TXNM Merger Backstop Revolving Facility expired according to its terms as TXNM did not make any additional borrowings thereunder by the commitment termination date of May 23, 2025, and TXNM was able to obtain the necessary Lender Consents.

Concurrent with the execution of the TXNM Merger Backstop Revolving Facility, TNMP entered into the TNMP Merger Backstop Term Loan to provide liquidity to repurchase TNMP's FMBs that were tendered for prepayment pursuant to the Offer (defined below). Borrowings under the TNMP Merger Backstop Term Loan were short-term in nature and bore interest at a variable rate, which was 5.42% at June 30, 2025. On July 21, 2025 TNMP issued the TNMP July 2025 FMBs and used the proceeds to repay the outstanding principal balance under the TNMP Merger Backstop Term Loan on July 22, 2025, terminating that agreement.

The documents governing an aggregate $1,505.0 million of TNMP's outstanding FMBs obligated TNMP to offer (the "Offer"), within 30 business days following the signing of the Merger Agreement, to prepay all outstanding TNMP FMBs at 100% of the principal amount, plus accrued and unpaid interest thereon, but without any make-whole amount or other premium. On June 14, 2025, the Offer expired and $1,084.3 million in aggregate principal amount of the bonds were validly tendered. On June 24, 2025, holders whose bonds were validly tendered and accepted for purchase received 100% of the aggregate principal amount of bonds prepaid plus accrued and unpaid interest using funds drawn under the TNMP Merger Backstop Term Loan. The documents governing the TNMP FMBs currently require TNMP to make another offer, within 30 business days of closing of the Merger, to prepay all the remaining outstanding TNMP FMBs at par. TNMP will make such offer to prepay the TNMP FMBs in accordance with the terms of the TNMP FMBs; however, holders of the TNMP FMBs are not required to tender their TNMP FMBs and may accept or reject such offer to prepay.

The information in this Form 10-Q is for informational purposes only and is neither an offer to purchase, nor a solicitation of an offer to sell, subscribe for or buy any securities in any jurisdiction pursuant to the proposed transactions or otherwise, nor shall there be any sale, issuance or transfer of securities in any jurisdiction in contravention of applicable law. Similar to the offer to prepay made after signing the Merger Agreement, the post-Merger closing offer to prepay the TNMP FMBs will be made only pursuant to an offer to prepay, which will set forth the terms and conditions of the offer to prepay.

In June 2025, TXNM entered into the June 2025 Stock Purchase Agreement whereby TXNM sold and the purchasers named therein agreed to purchase 3,615,003 shares of TXNM common stock for a purchase price of $55.325 per share (for an aggregate amount of approximately $200 million). The closing of the issuance occurred on June 27, 2025. TXNM used the proceeds to repay an equal amount due under the TXNM 2023 Term Loan. TXNM granted the purchasers customary registration rights with respect to the shares, pursuant to which TXNM was required to register such shares for resale with the SEC no later than five business days after TXNM filed its Form 10-Q for the quarterly period ended June 30, 2025. On August 8, 2025, TXNM registered the shares for resale.

On July 21, 2025, TNMP entered into the TNMP July 2025 Bond Purchase Agreement with institutional investors for the sale of $1,084.3 million aggregate principal amount of six series of TNMP July 2025 FMBs offered in private placement transactions. The proceeds were used to repay borrowings under the TNMP Merger Backstop Term Loan. See Note 9 for the terms of the TNMP July 2025 FMBs.

On July 31, 2025, PNM entered into the PNM July 2025 Note Purchase Agreement with institutional investors for the sale and issuance of $350.0 million aggregate principal amount of two series of the PNM July 2025 SUNs offered in private

Table of Contents

placement transactions. PNM used the proceeds from the PNM July 2025 SUNs to repay the PNM $250.0 million SUNs and for general corporate purposes. See Note 9 for the terms of the PNM July 2025 SUNs.

Beginning on August 15, 2025, TXNM, pursuant to the TXNM 2025 ATM Program sold an aggregate of 3,542,377 shares of TXNM common stock under the Distribution Agreement for net cash proceeds of $198.0 million. TXNM used the proceeds to repay borrowings under the TXNM Revolving Credit Facility and for other corporate purposes. See Note 9.

On August 29, 2025, TXNM paid the remaining balance due under its TXNM 2023 Term Loan in accordance with its terms, which terminated the agreement.

**Capital Requirements**

TXNM's total capital requirements consist of construction expenditures and cash dividend requirements for TXNM common stock and PNM preferred stock.

Key activities in TXNM's current construction program include:

- Investing in transmission and distribution infrastructure
- Upgrading generation resources and delivering clean energy
- Purchasing nuclear fuel

Projected capital requirements, including amounts expended through September 30, 2025, are:

| | 2025 | 2026-2029 | Total |
|---|---|---|---|
| | | (In millions) | |
| Construction expenditures | $ 1,321.3 | $ 6,513.0 | $ 7,834.3 |
| Dividends on TXNM common stock | 151.0 | 611.3 | 762.3 |
| Dividends on PNM preferred stock | 0.5 | 2.1 | 2.6 |
| Total capital requirements | $ 1,472.8 | $ 7,126.4 | $ 8,599.2 |

The construction expenditure estimates are under continuing review and subject to ongoing adjustment, as well as to Board review and approval. The construction expenditures above include TNMP's investments to support continued high growth in system demand across TNMP's service territories and growing encouragement for infrastructure investments from the Texas legislature to support grid reliability and resilience. PNM's capital initiative that includes investments in transmission and distribution infrastructure to deliver clean energy, enhance customer satisfaction, and increase grid resilience. Construction expenditures also include investments in PNM's Grid Modernization Plan and TNMP's SRP. These investments provide for a more resilient, reliable, efficient, and decarbonized electric system. Not included in the table above are incremental expenditures for new customer growth in New Mexico and Texas, and other transmission and renewable energy expansion in New Mexico. The ability of TXNM to pay dividends on its common stock is dependent upon the ability of PNM and TNMP to pay dividends to TXNM and the Merger (See Note 17). See Note 6 of the Notes to the Consolidated Financial Statements in the 2024 Annual Reports on Form 10-K for a discussion of regulatory and contractual restrictions on the payment of dividends by PNM and TNMP.

During the nine months ended September 30, 2025, TXNM met its capital requirements and construction expenditures through cash generated from operations, as well as its liquidity arrangements and the borrowings discussed in Financing Activities above.

In addition to the capital requirements for construction expenditures and dividends, the Company has long-term debt and term loans that must be paid or refinanced at maturity. PNM has $3.6 million and $3.7 million in scheduled principal payments due for the ETBC I Securitized Bonds in February and August 2026. PNM also has $200.0 million under the PNM 2024 Term Loan due in November 2025, $195.0 million under the PNM 2025 Term Loan due in July 2026, and $100.3 million of 0.875% PCRBs with a mandatory tender date of October 1, 2026. See Note 7 of the Notes to Consolidated Financial Statements in the 2024 Annual Reports on Form 10-K and Note 9 for additional information about the Company's long-term debt and equity arrangements. The Company may also enter into new arrangements similar to the existing agreements, borrow under the revolving credit facilities, or issue new long-term debt or equity in the public or private capital markets, or a combination of these sources. The Company has from time to time refinanced or repurchased portions of its outstanding debt before scheduled maturity. Depending on market conditions, the Company may refinance other debt issuances or make additional debt repurchases in the future.

Table of Contents

**Liquidity**

TXNM's liquidity arrangements include the $300.0 million TXNM Revolving Credit Facility, the $400.0 million PNM Revolving Credit Facility, and the $200.0 million TNMP Revolving Credit Facility. Each of these facilities matures on March 30, 2029 and contains two one-year extension options that, if exercised, would extend the maturity to March 2031, subject to approval by a majority of the lenders. PNM also has the $40.0 million PNM New Mexico Credit Facility. On July 25, 2025, PNM amended its PNM New Mexico Credit Facility to, among other things, extend the maturity from May 20, 2026 to May 31, 2030. Variable interest rates under the TXNM, PNM, and TNMP revolving credit facilities are based on SOFR. The Company believes the terms and conditions of these facilities are consistent with those of other investment grade revolving credit facilities in the utility industry. The Company expects that it will be able to extend or replace these credit facilities under similar terms and conditions prior to their expirations.

The revolving credit facilities and the PNM New Mexico Credit Facility provide short-term borrowing capacity. The revolving credit facilities also allow letters of credit to be issued. Letters of credit reduce the available capacity under the facilities. The Company utilizes these credit facilities and cash flows from operations to provide funds for both construction and operational expenditures. The Company's business is seasonal with more revenues and cash flows from operations being generated in the summer months. In general, the Company relies on the credit facilities to be the initial funding source for construction expenditures. Accordingly, borrowings under the facilities may increase over time. Depending on market and other conditions, the Company will periodically issue long-term debt and use the proceeds to reduce the borrowings under the credit facilities or refinance other debt. Information regarding the range of borrowings for each facility is as follows:

| | Three Months Ended September 30, 2025 | | Nine Months Ended September 30, 2025 | |
|---|---|---|---|---|
| **Range of Borrowings** | **Low** | **High** | **Low** | **High** |
| | (In millions) | | | |
| PNM: | | | | |
| PNM Revolving Credit Facility | $ 110.0 | $ 236.4 | $ — | $ 325.2 |
| PNM New Mexico Credit Facility | 40.0 | 40.0 | 20.0 | 40.0 |
| TNMP Revolving Credit Facility | — | 27.2 | — | 200.0 |
| TXNM Revolving Credit Facility | — | 156.6 | — | 258.0 |

At September 30, 2025, the weighted average interest rates were 5.49% for the PNM Revolving Credit Facility, 5.51% for the PNM New Mexico Credit Facility, and 5.77% for the TXNM Revolving Credit Facility. There were no outstanding borrowings under the TNMP Revolving Credit Facility.

The Company currently believes that its capital requirements for at least the next twelve months can be met through internal cash generation, existing, extended, or new credit arrangements, and access to public and private capital markets as discussed above and in Note 9. The Company anticipates that additional long-term financing, in the form of debt and/or equity issuances, will be necessary to fund its capital requirements and to balance its capital structure during the 2025-2029 period. To cover the difference in the amounts and timing of internal cash generation and cash requirements, the Company intends to use short-term borrowings under its current and future liquidity arrangements or other short-term loans. Market conditions, such as rising interest rates, may raise the cost of borrowing under the Company's current and future liquidity arrangements or other variable debt. In addition, if market conditions worsen, the Company may not be able to access the capital markets or renew credit facilities when they expire. Should that occur, the Company would seek to improve cash flows by reducing capital expenditures and exploring other available alternatives.

Table of Contents

As of October 24, 2025, ratings on the Company's securities were as follows:

| | TXNM | PNM | TNMP |
|---|---|---|---|
| S&P | | | |
| Issuer rating | BBB | BBB | BBB+ |
| Senior secured debt | * | * | A |
| Senior unsecured debt | BBB- | BBB | * |
| Junior subordinated debt | BB+ | * | * |
| Preferred stock | * | BB+ | * |
| Moody's | | | |
| Issuer rating | Baa3 | Baa2 | Baa1 |
| Senior secured debt | * | * | A2 |
| Senior unsecured debt | Baa3 | Baa2 | * |
| Junior subordinated debt | Ba1 | * | * |
| * Not applicable | | | |

In its May 2025 credit opinion, S&P commented that they view the transaction as credit supportive. In its June 2025 credit opinion, Moody's commented that the announced terms of the proposed Merger are not expected to adversely affect the ratings or outlooks of TXNM or its two utility subsidiaries. Investors are cautioned that a security rating is not a recommendation to buy, sell, or hold securities, that each rating is subject to revision or withdrawal at any time by the rating organization, and that each rating should be evaluated independently of any other rating.

A summary of liquidity arrangements as of October 24, 2025, is as follows:

| | PNM | TNMP | TXNM Separate | TXNM |
|---|---|---|---|---|
| | (In millions) | | | |
| Financing capacity: | | | | |
| Revolving Credit Facility | $ 400.0 | $ 200.0 | $ 300.0 | $ 900.0 |
| PNM New Mexico Credit Facility | 40.0 | — | — | 40.0 |
| Total financing capacity | 440.0 | 200.0 | 300.0 | 940.0 |
| Amounts outstanding as of October 24, 2025: | | | | |
| Revolving Credit Facility | 122.9 | — | 160.0 | 282.9 |
| PNM New Mexico Credit Facility | 40.0 | — | — | 40.0 |
| Letters of credit | — | — | 3.1 | 3.1 |
| Total short-term debt and letters of credit | 162.9 | — | 163.1 | 326.0 |
| Remaining availability as of October 24, 2025 | $ 277.1 | $ 200.0 | $ 136.9 | $ 614.0 |
| Invested cash as of October 24, 2025 | $ — | $ 16.8 | $ 1.0 | $ 17.8 |

In addition to the above, TXNM has $30.3 million of letters of credit issued under the WFB LOC Facility. See Note 9. The above table excludes intercompany debt. As of October 24, 2025, neither PNM or TNMP had any borrowings from TXNM under their respective intercompany loan agreements. TXNM had $1.7 million of intercompany borrowings from PNMR Development as of October 24, 2025. The remaining availability under the revolving credit facilities at any point in time varies based on a number of factors, including the timing of collections of accounts receivables and payments for construction and operating expenditures.

TXNM has an automatic shelf registration that provides for the issuance of various types of debt and equity securities that expires February 2028. PNM has a shelf registration statement for up to $650.0 million of SUNs that expires in May 2026.

**Other Material Cash Requirements**

TXNM, PNM, and TNMP have contractual obligations for long-term debt, minimum lease payments, coal contracts, coal mine reclamation, nuclear decommissioning, SJGS plant decommissioning, pension and retiree medical contributions, and other long-term obligations. See MD&A – Other Material Cash Requirements in the 2024 Annual Reports on Form 10-K.

Table of Contents

**Contingent Provisions of Certain Obligations**

As discussed in the 2024 Annual Reports on Form 10-K, TXNM, PNM, and TNMP have a number of debt obligations and other contractual commitments that contain contingent provisions. Some of these, if triggered, could affect the liquidity of the Company. In the unlikely event that the contingent requirements were to be triggered, TXNM, PNM, or TNMP could be required to provide security, immediately pay outstanding obligations, or be prevented from drawing on unused capacity under certain credit agreements. The contingent provisions also include contractual increases in the interest rate charged on certain of the Company's short-term debt obligations in the event of a downgrade in credit ratings. The Company believes its financing arrangements are sufficient to meet the requirements of the contingent provisions. No conditions have occurred that would result in any of the above contingent provisions being implemented.

**Capital Structure**

The capitalization tables below include the current maturities of long-term debt but does not include short-term debt or lease obligations as debt.

| | September 30, 2025 | December 31, 2024 |
|---|---|---|
| **TXNM** | | |
| TXNM common equity | 40.2 % | 33.9 % |
| Preferred stock of subsidiary | 0.1 | 0.2 |
| Long-term debt [1] | 59.7 | 65.9 |
| Total capitalization | 100.0 % | 100.0 % |
| **PNM** | | |
| PNM common equity | 43.5 % | 46.4 % |
| Preferred stock | 0.2 | 0.2 |
| Long-term debt | 56.3 | 53.4 |
| Total capitalization | 100.0 % | 100.0 % |
| **TNMP** | | |
| Common equity | 51.5 % | 48.3 % |
| Long-term debt | 48.5 | 51.7 |
| Total capitalization | 100.0 % | 100.0 % |

[1] TXNM's long-term debt as of September 30, 2025 includes Convertible Notes (Note 9), which receive 50% equity credit from ratings organizations.

## OTHER ISSUES FACING THE COMPANY

**Climate Change Issues**

*Background*

For the past several years, management has identified multiple risks and opportunities related to climate change, including the impacts of severe weather events, potential environmental regulation, technological innovation, and availability of fuel and water for operations, as among the most significant risks facing the Company. Accordingly, these risks are overseen by the Board in order to facilitate more integrated risk and strategy oversight and planning. Board oversight includes understanding the various challenges and opportunities presented by these risks, including the financial consequences that might result from enacted and potential federal and/or state regulation of GHG; plans to mitigate these risks; and the impacts these risks may have on the Company's strategy. In addition, the Board approves certain procurements of grid modernization technologies and replacement resources.

Management is also responsible for assessing significant risks, developing and executing appropriate responses, and reporting to the Board on the status of risk activities. For example, management periodically updates the Board on the implementation of corporate environmental policy, and the Company's environmental management systems, including the promotion of energy efficiency programs, and the use of renewable resources. The Board is also informed of the Company's practices and procedures to assess the impacts of operations on the environment. The Board considers issues associated with climate change, the Company's GHG exposures, and the financial consequences that might result from enacted and potential federal and/or state regulation of GHG. Management has published, with Board oversight, a Climate Change Report available at https://www.txnmenergy.com/sustainability/environment/climate_change_report that details the Company's efforts to transition to a carbon-free generating portfolio by 2040.

As part of management's continuing effort to monitor climate-related risks and assess opportunities, the Company has advanced its understanding of climate change by participating in the "2 Degree Scenario" planning by participating in the Electric Power Research Institute ("EPRI") Understanding Climate Scenarios & Goal Setting Activities program. The program

Table of Contents

focused on characterizing and analyzing the relationship of individual electric utility company's carbon emissions and global temperature goals. Activities included analyzing the scientific understanding of global emissions pathways that are consistent with limiting global warming and providing insight to assist companies in developing approaches to climate scenario planning. As PNM expands its sustainability efforts, EPRI's environmental and climate analysis programs have also been useful in gaining a better understanding of energy and environmental policy and regulations, advanced clean energy technologies, decarbonization trends and climate impacts. In 2022, PNM joined EPRI's Climate READi program which is a strategic initiative convening a global collaborative of electric utilities, thought leaders, scientific researchers and other key stakeholders to strengthen the power sector's collective approach to managing climate risk to the power system. The program is a three-year initiative, through work across three concurrent workstreams, and PNM will benefit from the development of a first-of-its-kind comprehensive framework for managing physical climate risk and investment prioritization that was launched in May 2025.

The Company cannot anticipate or predict the potential long-term effects of climate change or climate change related regulation on its results of operations, financial position, or cash flows.

*Greenhouse Gas Emissions Exposures*

In 2024, GHG emissions associated with PNM's interests in its fossil-fueled generating plants included approximately 1.5 million metric tons of $CO_2$, which comprises the vast majority of PNM's GHG emissions.

As of September 30, 2025, approximately 27% of PNM's generating capacity, including resources owned, leased, or under PPAs, all of which is located within the U.S., consisted of coal or gas-fired generation that produces GHG emissions. As PNM shifts its generation to cleaner energy resources, the Company's output of GHG emissions continues to decrease. Many factors affect the amount of GHG emitted, including total electricity sales, plant performance, economic dispatch, and the availability of renewable resources. For example, wind generation performance varies each year as a result of highly seasonal wind patterns and annual wind resource variability. Similarly, if PVNGS experienced prolonged outages or if PNM's entitlement from PVNGS were reduced, PNM might be required to utilize other power supply resources such as gas-fired generation, which could increase GHG emissions.

PNM has several programs underway to reduce or offset GHG emissions from its generation resource portfolio, thereby reducing its exposure to climate change regulation. The shutdown of SJGS resulted in a reduction of GHG emissions for the entire station allowing PNM to attain GHG emissions reductions goals set forth by the ETA, discussed below.

PNM's utility-owned solar and energy storage capacity, as well as solar, energy storage, wind, and geothermal procurements in service as of September 30, 2025 have a total net generation capacity of 2,969 MW. The NMPRC has approved plans for PNM to procure energy and RECs from additional resources to serve retail customers and a data center located in PNM's service territory. PNM's approved resource plans have a generation capacity of 1,165 MW. This includes approximately 305 MW of capacity under the Community Solar Act which will allow PNM to provide customers the option of accessing solar energy. PNM will continue to seek approval to procure renewable resources while balancing the impact to customers' electricity costs in order to meet forecasted peak load requirements to serve its customers and New Mexico's RPS and carbon-free resource requirements.

PNM also has a customer distributed solar generation program that represented 327.9 MW and 5 MW under the Community Solar Act at September 30, 2025. PNM's distributed solar programs will generate an estimated 655.8 GWh of emission-free solar energy available this year to offset PNM's annual production from fossil-fueled electricity generation. PNM has offered its customers a comprehensive portfolio of energy efficiency and load management programs since 2007. PNM's cumulative savings from these programs were an estimated 8,227 GWh of electricity through 2024. PNM projects energy efficiency and load management programs between 2025 and 2039 will provide the equivalent of approximately 11,900 GWh of electricity savings, which will avoid approximately 1.2 million tons of $CO_2$ based upon projected emissions from PNM's portfolio of resources. These estimates are subject to change because of the uncertainty of many of the underlying variables, including changes in PNM's generation portfolio, demand for electricity, energy efficiency, and complex relationships between those variables.

Because of PNM's dependence on fossil-fueled generation, legislation or regulation that imposes a limit or cost on GHG could impact the cost at which electricity is produced. While PNM expects to recover any such costs through rates, the timing and outcome of proceedings for cost recovery are uncertain. In addition, to the extent that any additional costs are recovered through rates, customers may reduce their usage, relocate facilities to other areas with lower energy costs, or take other actions that ultimately could adversely impact PNM.

*Other Climate Change Risks*

PNM's generating stations are located in the arid southwest. Access to water for cooling for some of these facilities is critical to continued operations. Forecasts for the impacts of climate change on water supply in the southwest range from reduced precipitation to changes in the timing of precipitation. In either case, PNM's generating facilities requiring water for cooling will need to mitigate the impacts of climate change through adaptive measures. Current measures employed by PNM

Table of Contents

generating stations include the use of sustainable, less variable groundwater supplies, and investments in technologies such as air cooling and cooling water recycling. These types of actions will continue to be important to sustain operations.

PNM's service areas occasionally experience periodic high winds and severe thunderstorms. TNMP has operations in the Gulf Coast area of Texas, which experiences periodic hurricanes and other extreme weather conditions. In addition to potentially causing physical damage to Company-owned facilities, which disrupts the ability to transmit and/or distribute energy, weather and other events of nature can temporarily reduce customers' usage and demand for energy. In addition, other events influenced by climate change, such as wildfires, could disrupt Company operations or result in third-party claims against the Company. PNM has enhanced its wildfire prevention efforts and maintains a wildfire mitigation plan and a public safety power shutoff plan. TNMP has also developed a wildfire mitigation plan. However, both PNM and TNMP remain at risk for wildfires outside of their control and the resulting damages in their service areas.

*EPA Regulation*

In 2007, the U.S. Supreme Court held that EPA has the authority to regulate GHG emissions under the CAA, and in 2009, EPA released its endangerment finding for GHG from new motor vehicles, stating that the atmospheric concentrations of six key greenhouse gases ($CO_2$, methane, nitrous oxides, hydrofluorocarbons, perfluorocarbons, and sulfur hexafluoride) endanger the public health and welfare. These actions triggered new GHG permitting requirements for stationary sources, including the energy industry, under the Prevention of Significant Deterioration ("PSD") and Title V program, although the U.S. Supreme Court held the CAA does not authorize EPA to require a source to obtain a PSD permit solely on the basis of its potential GHG emissions.

EPA also determined that its finding of endangerment requires it to issue performance standards under Section 111 of the CAA to regulate GHG emissions from new and existing stationary sources, including fossil fuel fired EGUs. Accordingly, in 2015, EPA issued Carbon Pollution Standards for new, modified, and reconstructed power plants (under Section 111(b)) and the Clean Power Plan for existing power plants (under Section 111(d)).

Multiple states, utilities, and trade groups challenged both the Carbon Pollution Standards for new sources and the Clean Power Plan for existing sources in separate cases, and the challengers successfully petitioned the U.S. Supreme Court for a stay of the Clean Power Plan.

In 2019, EPA repealed the Clean Power Plan, promulgated the ACE Rule, and revised the implementing regulations for all emission guidelines issued under CAA Section 111(d). The ACE Rule was also challenged, and on January 19, 2021, the DC Circuit issued an opinion in American Lung Association and American Public Health Association v. EPA, et al. vacating the ACE Rule.

Numerous parties sought review by the U.S. Supreme Court and on June 30, 2022, the Court held that the "generation shifting" approach in the Clean Power Plan exceeded the powers granted to EPA by Congress, though the Court did not address the related issue of whether Section 111 of the CAA only authorizes EPA to require measures that can be implemented entirely within the fence line at an individual source. Of broader significance in administrative law, the Court's opinion expressly invoked the major questions doctrine, which requires rules involving issues of "vast economic or political significance," to be supported by clear statutory authorization. In cases where there is no clear statement of authority, courts need not defer to the agency's statutory interpretation on "major questions." The decision sets legal precedent for future rulemakings by EPA and other federal regulatory agencies whereby the agency's authority may be limited based upon similar reasoning.

The litigation over the Carbon Pollution Standards remains held in abeyance but could be reactivated by the parties upon a determination by the court that reconsideration of the rule has concluded.

In 2024, EPA adopted regulatory actions under CAA Sections 111(b) and (d) to replace the Clean Power Plan and the ACE Rule. The final rules include revised new source performance standards under Section 111(b) for all new natural gas-fired combustion turbines and emission guidelines under Section 111(d) requiring states to develop standards of performance for GHG emissions from existing fossil-fuel-fired electric steam generating units. In the final rules, EPA determined that the standards for existing coal- or gas-fired steam generating units must be based on the use of either CCS (long-term), natural gas co-firing (medium-term), or exempt from the rule via early retirement. The standards for new combustion turbines must be based on CCS (base load), efficient simple cycle design (intermediate load), or lower-emitting fuels (low load). Over a dozen states, several industry groups and some power companies and labor unions filed challenges to the rule at the DC Circuit, which heard oral arguments on December 6, 2024.

On January 20, 2025, President Trump signed an executive order entitled "Unleashing American Energy" directing all agencies, including EPA, to review all agency actions and suspend, revise, or rescind those identified as imposing an undue burden on domestic energy resources. The order also disbands the Interagency Working Group on the Social Cost of Greenhouse Gases, eliminates the "social cost of carbon" from consideration in any Federal permitting or regulatory decision, and expressly directs EPA to submit joint recommendations on the legality and continuing applicability of the 2009 endangerment finding for greenhouse gases that currently provides the legal basis for EPA to regulate greenhouse gases under

Table of Contents

the CAA. On March 12, 2025, EPA announced it will formally reconsider the 2009 endangerment finding in collaboration with the Office of Management and Budget ("OMB") and other relevant agencies. On June 17, 2025, EPA published a proposed rule in the Federal Register with two alternatives to repeal or revise the GHG emission standards for EGUs. EPA primarily proposes to find that GHG emissions from fossil fuel-fired power plants "do not contribute significantly to dangerous air pollution" under the meaning of CAA Section 111, which would preclude EPA from regulating GHG emissions from those plants. As a result, EPA is proposing to repeal all GHG standards for the power sector promulgated under CAA Section 111 in both 2015 and 2024. EPA also proposed in the alternative to find that CCS is not adequately demonstrated and that neither CCS nor gas co-firing are the best system of emission reduction for GHG emissions from power plants, which findings also support repeal of those specific requirements from the rules adopted in 2024. Comments were due by September 15, 2025 and EPA intends to finalize the proposed rule by the end of 2025.

On August 1, 2025, EPA published a proposal to rescind the Agency's 2009 final rule commonly known as the Endangerment Finding. In the Endangerment Finding, EPA found that current and projected atmospheric concentrations of the well-mixed combination of six GHGs threaten public health and welfare, and that the combined emissions of these GHGs from new motor vehicles and engines contribute to the GHG pollution that threatens public health and welfare. This provided the basis for EPA's subsequent GHG regulations applicable to stationary sources. Comments were due September 15, 2025.

*Federal Legislation*

In July 2025, President Trump signed the OBBBA, significantly altering the landscape of climate action and clean energy initiatives in the United States. The legislation revises and, in some cases, phases out tax credits established under the IRA and also includes restrictions on the availability of credits for "foreign entities of concern." It is uncertain under the new Trump Administration, given the control of both houses of Congress by the Republican Party, what additional Federal legislation on climate change is expected during this Congress.

*State and Regional Activity*

Pursuant to New Mexico law, each utility must submit an IRP to the NMPRC every three years to evaluate renewable energy, energy efficiency, load management, distributed generation, and conventional supply-side resources on a consistent and comparable basis. The IRP is required to take into consideration risk and uncertainty of fuel supply, price volatility, and costs of anticipated environmental regulations when evaluating resource options to meet supply needs of the utility's customers. The NMPRC requires that New Mexico utilities factor a standardized cost of carbon emissions into their IRPs using prices ranging between $8 and $40 per metric ton of $CO_2$ emitted and escalating these costs by 2.5% per year. Under the NMPRC order, each utility must analyze these standardized prices as projected operating costs. Reflecting the evolving nature of this issue, the NMPRC order states that these prices may be changed in the future to account for additional information or changed circumstances. Although these prices may not reflect the costs that ultimately will be incurred, PNM is required to use these prices for purposes of its IRP. PNM's 2023 filing has a continued focus on a carbon-free energy system by 2040. The plan highlights the need for the significant sustained addition of resources over the next two decades, replacing retiring or expiring capacity, meeting concurrent load growth, while reducing the carbon intensity of PNM's portfolio.

The ETA, among other things, requires that investor-owned utilities obtain specified percentages of their energy from renewable and carbon-free resources. The passage of the ETA amended the REA to require utilities operating in New Mexico to have renewable portfolios equal to 40% by 2025, 50% by 2030, 80% by 2040, and 100% zero-carbon energy by 2045. Under the ETA provisions, PNM will also be required to meet a generation emission standard of no more than 400 lbs. of $CO_2$ per MWh beginning in 2023 and not more than 200 lbs. per MWh beginning in 2032. PNM takes this requirement into account in its resource planning and will manage compliance with the standards based upon existing generation resources and approved resource retirements and replacements. The ETA provides for a transition from fossil-fuel generating resources to renewable and other carbon-free resources by allowing investor-owned utilities to issue securitized bonds related to the retirement of coal-fired generating facilities to qualified investors.

The ETA has a significant impact on PNM's future generation portfolio. In 2022, in compliance with the ETA, the NMED announced a new rulemaking, Carbon Dioxide Emission Standards for Electric Generating Facilities, to develop carbon emission standards for new and existing electric coal-fired generating facilities. In 2022, the rule was passed which adopts new carbon emission standards for new and existing coal-fired power plants. In compliance with the ETA, PNM filed its first $CO_2$ Emissions Measurement and Compliance Annual Report on March 14, 2025.

In 2020, the NMPRC approved PNM's San Juan abandonment application and for the issuance of securitized bonds consistent with the requirements of the ETA and in 2023 PNM issued the ETBC I Securitized Bonds. PNM cannot predict the full impact of the ETA with respect to Four Corners.

The State of California has enacted comprehensive climate-related disclosure laws that will require large entities doing business in the state to measure and disclose Scope 1 and Scope 2 GHG emissions beginning in 2026, Scope 3 GHG emissions beginning in 2027, and to publish biennial reports detailing climate-related financial risk beginning in January 2026. The State

Table of Contents

of California has yet to issue implementing regulations for its laws, and we are closely monitoring developments to determine if any TXNM entity would be required to make disclosures under California law and for the nature of any such required disclosures.

*International Accords*

The United Nations Framework Convention on Climate Change ("UNFCCC") is an international environmental treaty that was negotiated at the 1992 United Nations Conference on Environment and Development (informally known as the Earth Summit) and entered into force in March 1994. The objective of the treaty is to "stabilize greenhouse gas concentrations in the atmosphere at a level that would prevent dangerous anthropogenic interference with the climate system." Parties to the UNFCCC, including the U.S., have been meeting annually in Conferences of the Parties ("COP") to assess progress in meeting the objectives of the UNFCCC.

In 2015, the Paris Agreement was finalized during the 2015 COP. The aim of the Paris Agreement is to limit global temperature rise to two degrees Celsius above pre-industrial levels. The agreement, which was agreed to by approximately 200 parties, requires that countries submit INDCs. INDCs reflect national targets and actions that arise out of national policies and elements relating to oversight, guidance and coordination of actions to reduce emissions by all countries. In 2017, President Trump announced that the U.S. would withdraw from the Paris Agreement. As a result of the President's notice to the United Nations, the U.S. officially withdrew from the Paris Agreement on November 4, 2020. On January 20, 2021, President Biden signed an instrument that will allow the U.S. to rejoin the Paris Agreement. The instrument was deposited with the United Nations on January 21, 2021, and the U.S. officially became a party to the Paris Agreement on February 19, 2021. On January 20, 2025, President Trump signed an executive order entitled "Putting America First in International Environmental Agreements," directing the United States Ambassador to the United Nations to immediately submit formal written notification of the United States' withdrawal from the Paris Agreement and any other agreement, pact, accord, or similar commitment made under the United Nations Framework Convention on Climate Change.

PNM calculated GHG reductions that resulted from scenarios that captured PNM's retirement of its share of the SJGS in 2022 and assumed exiting Four Corners in 2031. With that PNM set a goal to have a 100% carbon-free generating portfolio by 2040. While the Company has not conducted an independent 2 Degree Scenario analysis, our commitment to becoming 100% carbon-free by 2040 produces a carbon emissions reduction pathway that tracks within the ranges of climate scenario pathways that are consistent with limiting the global warming average to less than 2 degrees Celsius. In addition, as an investor-owned utility operating in the state of New Mexico, PNM is required to comply with the ETA, which requires utilities' generating portfolio be 100% carbon-free by 2045. The requirements of the ETA and the Company's goal compare favorably to the U.S. INDC of 50% to 52% carbon emissions reduction by 2030 and the Biden Administration's goal of net-zero carbon emissions economy-wide by 2050.

PNM will continue to monitor the United States' move to withdraw from the Paris Agreement and other parties' involvement in these types of international accords, but the potential impact that such accords may have on the Company cannot be determined at this time.

*Assessment of Legislative/Regulatory Impacts*

The Company has assessed, and continues to assess, the impacts of climate change legislation and regulation on its business. This assessment is ongoing and future changes arising out of the legislative or regulatory process could impact the assessment significantly. PNM's assessment includes assumptions regarding specific GHG limits; the timing of implementation of these limits; the possibility of a market-based trading program, including the associated costs and the availability of emission credits or allowances; the development of emission reduction and/or renewable energy technologies; and provisions for cost containment. Moreover, the assessment assumes various market reactions such as the price of coal and gas and regional plant economics. These assumptions are, at best, preliminary and speculative. However, based upon these assumptions, the enactment of climate change legislation or regulation could, among other things, result in significant compliance costs, including large capital expenditures by PNM, and could jeopardize the Company's reputation as well as the economic viability of certain generating facilities. The ultimate consequences of increased stakeholder scrutiny related to climate change and environmental regulation could lead to increased costs to customers and affect results of operations, cash flows, and financial condition if the incurred costs are not fully recovered through regulated rates. Higher rates could also contribute to reduced usage of electricity. PNM's assessment process is evolving and is too speculative at this time for a meaningful prediction of the long-term financial impact.

**Transmission Issues**

At any given time, FERC has various notices of inquiry and rulemaking dockets related to transmission issues pending. Such actions may lead to changes in FERC administrative rules or ratemaking policy but have no time frame in which action must be taken or a docket closed with no further action. Further, such notices and rulemaking dockets do not apply strictly to PNM but will have industry-wide effects in that they will apply to all FERC-regulated entities. PNM monitors and often submits comments taking a position in such notices and rulemaking dockets or may join in larger group responses. PNM often

Table of Contents

cannot determine the full impact of a proposed rule and policy change until the final determination is made by FERC and PNM is unable to predict the outcome of these matters.

**Other Matters**

See Notes 11 and 12 herein and Notes 16 and 17 of the Notes to Consolidated Financial Statements in the 2024 Annual Reports on Form 10-K for a discussion of commitments and contingencies and rate and regulatory matters.

## CRITICAL ACCOUNTING POLICIES AND ESTIMATES

The preparation of financial statements in accordance with GAAP requires Company management to select and apply accounting policies that best provide the framework to report the results of operations and financial position for TXNM, PNM, and TNMP. The selection and application of those policies requires management to make difficult, subjective, and/or complex judgments concerning reported amounts of revenue and expenses during the reporting period and the reported amounts of assets and liabilities at the date of the financial statements. As a result, there exists the likelihood that materially different amounts would be reported under different conditions or using different assumptions.

As of September 30, 2025, there have been no significant changes with regard to the critical accounting policies disclosed in TXNM's, PNM's, and TNMP's 2024 Annual Reports on Forms 10-K. The policies disclosed included regulatory accounting, impairments, decommissioning and reclamation costs, pension and other postretirement benefits, accounting for contingencies, and income taxes.

## *MD&A FOR TNMP*

## RESULTS OF OPERATIONS

TNMP operates in only one reportable segment, as presented above in Results of Operations for TXNM.

## *MD&A FOR PNM*

## RESULTS OF OPERATIONS

PNM operates in only one reportable segment, as presented above in Results of Operations for TXNM.

## DISCLOSURE REGARDING FORWARD LOOKING STATEMENTS

Statements made in this filing that relate to future events or TXNM's, PNM's, or TNMP's expectations, projections, estimates, intentions, goals, targets, and strategies are made pursuant to the Private Securities Litigation Reform Act of 1995. Readers are cautioned that all forward-looking statements are based upon current expectations and estimates and apply only as of the date of this report. TXNM, PNM, and TNMP assume no obligation to update this information.

Because actual results may differ materially from those expressed or implied by these forward-looking statements, TXNM, PNM, and TNMP caution readers not to place undue reliance on these statements. TXNM's, PNM's, and TNMP's business, financial condition, cash flows, and operating results are influenced by many factors, which are often beyond their control, that can cause actual results to differ from those expressed or implied by the forward-looking statements. These factors, which are neither presented in order of importance nor weighted, include:

- The failure of Parent to obtain any equity, debt, or other financing necessary to complete the Merger
- The expected timing and likelihood of completion of the pending Merger, including the timing, receipt and terms and conditions of any required governmental and regulatory approvals of the pending Merger that could reduce anticipated benefits or cause the parties to abandon the transaction
- The occurrence of any event, change or other circumstances that could give rise to the termination of the Merger Agreement, including in circumstances requiring TXNM to pay a termination fee
- The receipt of an unsolicited offer from another party to acquire our assets or capital stock that could interfere with the Merger
- The outcome of any legal proceedings, regulatory proceedings, or enforcement matters that may be instituted relating to the Merger
- Risks related to disruption of management time from ongoing business operations due to the proposed Merger
- The risk that the proposed transaction and its announcement could have an adverse effect on the ability of TXNM to retain and hire key personnel and maintain relationships with its customers and suppliers, and on its operating results and businesses generally
- The announcement and pendency of the Merger, during which TXNM is subject to certain operating restrictions, could have an adverse effect on TXNM's businesses, results of operations, financial condition or cash flows
- The costs incurred to consummate the Merger

Table of Contents

- The risk that the price of TXNM's common stock may fluctuate during the pendency of the proposed transaction and may decline significantly if the proposed transaction is not completed
- The ability of PNM and TNMP to recover costs and earn allowed returns in regulated jurisdictions and the impact on service levels for PNM customers if the ultimate outcomes do not provide for the recovery of costs and operating and capital expenditures, as well as other impacts of federal or state regulatory and judicial actions
- The ability of the Company to successfully forecast and manage its operating and capital expenditures, including aligning expenditures with the revenue levels resulting from the ultimate outcomes of regulatory proceedings
- Uncertainty surrounding the status of PNM's participation in jointly-owned generation projects
- Uncertainty regarding the requirements and related costs of decommissioning power plants and reclamation of coal mines, as well as the ability to recover those costs from customers, including the potential impacts of current and future regulatory proceedings
- The impacts on the electricity usage of customers and consumers due to performance of state, regional, and national economies, energy efficiency measures, weather, seasonality, alternative sources of power, advances in technology, and other changes in supply and demand
- Uncertainty related to the potential for regulatory orders, legislation or rulemakings that provide for municipalization of utility assets or public ownership of utility assets, including generation resources, or which would delay or otherwise impact the procurement of necessary resources in a timely manner
- The Company's ability to maintain its debt, including convertible debt, and access the financial markets in order to repay or refinance debt as it comes due and for ongoing operations and construction expenditures due to disruptions in the capital or credit markets, actions by ratings agencies, and fluctuations in interest rates resulting from any negative impacts from regulatory proceedings, actions by the Federal Reserve, entry into the Merger Agreement, geopolitical activity, including tariffs, or the risk of wildfires and storms
- The risks associated with the cost and completion of generation, transmission, distribution, and other projects, including uncertainty related to regulatory approvals and cost recovery, the ability of counterparties to meet their obligations under certain arrangements (including renewable energy resources, approved PPAs and ESAs), and supply chain or other outside support services that may be disrupted
- The potential unavailability of cash from TXNM's subsidiaries due to regulatory, statutory, or contractual restrictions or subsidiary earnings or cash flows
- The performance of generating units, transmission systems, and distribution systems, which could be negatively affected by operational issues, fuel quality and supply chain issues (disruptions), unplanned outages, extreme weather conditions, wildfires, storms, terrorism, cybersecurity breaches, and other catastrophic events, including the costs the Company may incur to repair its facilities and/or the liabilities the Company may incur to third parties in connection with such issues beyond the extent of insurance coverage
- State and federal regulation or legislation relating to environmental matters and renewable energy requirements, the resultant costs of compliance, and other impacts on the operations and economic viability of PNM's generating plants
- State and federal regulatory, legislative, executive, and judicial decisions and actions on ratemaking, tariffs, and taxes, including guidance related to the interpretation of changes in tax laws, the Inflation Reduction Act, the Infrastructure Investment and Jobs Act of 2021, the OBBBA, and other matters including a government shutdown and the cancellation of grants or related funding
- Risks related to climate change, including potential financial and reputational risks resulting from increased stakeholder scrutiny related to climate change, litigation, legislative and regulatory efforts to limit GHG, including the impacts of the ETA
- Employee workforce factors, including cost control efforts and issues arising out of collective bargaining agreements and labor negotiations with union employees
- Variability of prices and volatility and liquidity in the wholesale power and natural gas markets, including the impacts to transmission margins
- Changes in price and availability of fuel and water supplies, including the ability of the mine supplying coal to Four Corners and the companies involved in supplying nuclear fuel to provide adequate quantities of fuel
- Regulatory, financial, and operational risks inherent in the operation of nuclear facilities, including spent fuel disposal uncertainties
- The impacts of decreases in the values of marketable securities maintained in trusts to provide for decommissioning, reclamation, pension benefits, and other postretirement benefits, including potential increased volatility resulting from actions by the Federal Reserve to address inflationary concerns, and international developments
- Uncertainty surrounding counterparty performance and credit risk, including the ability of counterparties to supply fuel and perform reclamation activities and impacts to financial support provided to facilitate reclamation and decommissioning at SJGS
- The effectiveness of risk management regarding commodity transactions and counterparty risk
- The outcome of legal proceedings, including the extent of insurance coverage
- Changes in applicable accounting principles or policies

Any material changes to risk factors occurring after the filing of TXNM's, PNM's, and TNMP's 2024 Annual Reports on Form 10-K are disclosed in Item 1A, Risk Factors, in Part II of this Form 10-Q.

Table of Contents

For information about the risks associated with the use of derivative financial instruments, see Item 3. “Quantitative and Qualitative Disclosures About Market Risk.”

**SECURITIES ACT DISCLAIMER**

Certain securities described or cross-referenced in this report have not been registered under the Securities Act, or any state securities laws and may not be reoffered or sold in the United States absent registration or an applicable exemption from the registration requirements of the Securities Act and applicable state securities laws. This Form 10-Q does not constitute an offer to sell or the solicitation of an offer to buy any securities.

**WEBSITES**

The TXNM website, www.txnmenergy.com, is an important source of Company information. New or updated information for public access is routinely posted. TXNM encourages analysts, investors, and other interested parties to register on the website to automatically receive Company information by e-mail. This information includes news releases, notices of webcasts, and filings with the SEC. Participants will not receive information that was not requested and can unsubscribe at any time.

Our corporate internet addresses are:

- TXNM: www.txnmenergy.com
- PNM: www.pnm.com
- TNMP: www.tnmp.com

TXNM’s corporate website includes a dedicated section providing key environmental and other information related to PNM’s and TNMP’s operations, including information that collectively demonstrates the Company’s commitment to sustainability. This information highlights plans for PNM to be coal-free no later than 2031 and to have a carbon-free generating portfolio by 2040.

The contents of these websites are not a part of this Form 10-Q. The SEC filings of TXNM, PNM, and TNMP, including annual reports on Form 10-K, quarterly reports on Form 10-Q, current reports on Form 8-K, and amendments to those reports filed or furnished pursuant to Section 13(a) or 15(d) of the Exchange Act, are accessible free of charge on the TXNM website as soon as reasonably practicable after they are filed with, or furnished to, the SEC. Reports filed with the SEC are available on its website, www.sec.gov. These reports are also available in print upon request from TXNM free of charge.

Also available on the Company’s website at https://www.txnmenergy.com/sustainability/governance/governance-documents.aspx and in print upon request from any shareholder are TXNM’s:

- Corporate Governance Principles
- Code of Ethics (*Do the Right Thing – Principles of Business Conduct; Supplier Code of Conduct*)
- Charters of the Audit and Ethics Committee, Nominating and Governance Committee, Compensation and Human Resources Committee, and Finance Committee
- Restated Articles of Incorporation and Bylaws

The Company will post amendments to or waivers from its code of ethics (to the extent applicable to the Company’s executive officers and directors) on its website.

**ITEM 3. QUANTITATIVE AND QUALITATIVE DISCLOSURES ABOUT MARKET RISK**

The Company manages the scope of its various forms of market risk through a comprehensive set of policies and procedures with oversight by senior level management through the Risk Management Committee (“RMC”). The Board’s Finance Committee sets the risk limit parameters. The RMC has oversight over the risk control organization. The RMC is assigned responsibility for establishing and enforcing the policies, procedures, and limits and evaluating the risks inherent in proposed transactions on an enterprise-wide basis.

The RMC’s responsibilities include:

- Establishing policies regarding risk tolerance levels and activities in each of the business segments
- Approving new types of derivatives entered into for marketing and hedging
- Reviewing and approving hedging risk activities
- Establishing policies regarding counterparty credit exposure and limits
- Authorizing and delegating transaction limits
- Reviewing and approving controls and procedures for derivative activities
- Reviewing and approving models and assumptions used to calculate mark-to-market and market risk exposure
- Proposing risk limits to the Board’s Finance Committee for its approval
- Reporting to the Board’s Audit and Finance Committees on these activities

Table of Contents

To the extent an open position exists, fluctuating commodity prices, interest rates, equity prices, and economic conditions can impact financial results and financial position, either favorably or unfavorably. As a result, the Company cannot predict with certainty the impact that its risk management decisions may have on its businesses, operating results, or financial position.

**Commodity Risk**

Information concerning accounting for derivatives and the risks associated with commodity contracts is set forth in Note 7, including a summary of the fair values of mark-to-market energy related derivative contracts included in the Condensed Consolidated Balance Sheets. During the nine months ended September 30, 2025, and the year ended December 31, 2024, the Company had no commodity derivative instruments designated as cash flow hedging instruments.

Commodity contracts that meet the definition of a derivative are recorded at fair value on the Condensed Consolidated Balance Sheets. In the nine months ended September 30, 2025 and 2024, the effects of mark-to-market commodity derivative instruments had no impact to PNM's net earnings and $5.7 million of fair value gains and $0.8 million of fair value losses have been recorded as a regulatory asset. All of the fair values as of September 30, 2025 and December 31, 2024, were determined based on prices provided by external sources other than actively quoted market prices. The net mark-to-market amounts as of September 30, 2025 were zero.

PNM may be exposed to changes in the market prices of electricity and natural gas for the positions in its wholesale portfolio not covered by the FPPAC. The Company manages risks associated with market fluctuations by utilizing various commodity instruments that may qualify as derivatives, including futures, forwards, options, and swaps. PNM uses such instruments to hedge its exposure to changes in the market prices of electricity and natural gas. PNM also uses such instruments under an NMPRC approved hedging plan, from time-to-time, to manage fuel and purchased power costs related to customers covered by its FPPAC.

**Credit Risk**

The Company is exposed to credit risk from its retail and wholesale customers, as well as the counterparties to derivative instruments. The Company conducts counterparty risk analysis across business segments and uses a credit management process to assess the financial conditions of counterparties. The following table provides information related to credit exposure by the credit worthiness (credit rating) and concentration of credit risk for wholesale counterparties, all of which will mature in less than two years.

**Schedule of Credit Risk Exposure**
**September 30, 2025**

| Rating [1] | Credit Risk Exposure[2] | Number of Counter-parties >10% | Net Exposure of Counter-parties >10% |
|---|---|---|---|
| | (Dollars in thousands) | | |
| External ratings: | | | |
| Investment grade | $ 1,513 | 2 | $ 1,755 |
| Non-investment grade | — | — | — |
| Split ratings | — | — | — |
| Internal ratings: | | | |
| Investment grade | 1,466 | — | — |
| Non-investment grade | — | — | — |
| Total | $ 2,979 | | $ 1,755 |

(1) The rating "Investment Grade" is for counterparties, or a guarantor, with a minimum S&P rating of BBB- or Moody's rating of Baa3. The category "Internal Ratings – Investment Grade" includes those counterparties that are internally rated as investment grade in accordance with the guidelines established in the Company's credit policy.

(2) The Credit Risk Exposure is the gross credit exposure, including long-term contracts, forward sales, and short-term sales. The gross exposure captures the amounts from receivables/payables for realized transactions, delivered and unbilled revenues, and mark-to-market gains/losses. Gross exposures can be offset according to legally enforceable netting arrangements but are not reduced by posted credit collateral. At September 30, 2025, TXNM held no cash collateral to offset its credit exposure.

Net credit risk for the Company's largest counterparty as of September 30, 2025, was $0.9 million.

Other investments have no significant counterparty credit risk.

Table of Contents

**Interest Rate Risk**

The majority of PNM's and TNMP's long-term debt is fixed-rate debt, which does not expose earnings to adverse changes in market interest rates. PNM and TNMP earnings are exposed to adverse changes in market interest rates when long-term debt must be refinanced, repriced or redeemed. TXNM's debt and the revolving credit facilities of PNM and TNMP are exposed to interest rate risk to the extent variable interest rates continue to rise. The Company periodically makes plans to reduce its variable interest rate exposures through various instruments including fixed rate debt and equity and hedging arrangements and otherwise expects that it will be able to extend or replace variable rate debt under similar terms and conditions prior to their expirations. Variable interest rates under the TXNM, PNM, and TNMP revolving credit facilities and term loans are based on SOFR.

At October 24, 2025, variable rate debt balances and weighted average interest rates were as follows:

| Variable Rate Debt | Weighted Average Interest Rate | Balance Outstanding | Capacity |
|---|---|---|---|
| | | (In thousands) | |
| Short-term Debt: | | | |
| TXNM Revolving Credit Facility | 5.76 % | $ 160,000 | $ 300,000 |
| PNM Revolving Credit Facility | 5.38 | 122,900 | 400,000 |
| PNM New Mexico Credit Facility | 5.35 | 40,000 | 40,000 |
| TNMP Revolving Credit Facility | — | — | 200,000 |
| | | $ 322,900 | $ 940,000 |
| Long-term Debt: | | | |
| PNM 2024 Term Loan | 4.99 % | $ 200,000 | |
| PNM 2025 Term Loan | 5.02 | 195,000 | |
| | | $ 395,000 | |

The investments held by PNM in trusts for decommissioning and reclamation had an estimated fair value of $493.9 million at September 30, 2025, of which 9.1% were fixed-rate debt securities that subject PNM to risk of loss of fair value with increases in market interest rates. If interest rates were to increase by 50 basis points from their levels at September 30, 2025, the decrease in the fair value of the fixed-rate securities would be 0.2%, or $0.1 million.

PNM does not directly recover or return through rates any losses or gains on the securities, including equity investments discussed below, in the trusts for decommissioning and reclamation. However, the overall performance of these trusts does enter into the periodic determinations of expense and funding levels, which are factored into the rate making process to the extent applicable to regulated operations. PNM is at risk for shortfalls in funding of obligations due to investment losses, including those from the equity market risks discussed below, to the extent not ultimately recovered through rates charged to customers.

**Equity Market Risk**

The investments held by PNM in trusts for decommissioning and reclamation include certain equity securities at September 30, 2025. These equity securities expose PNM to losses in fair value should the market values of the underlying securities decline. Equity securities comprised 85.0% of the securities held by the trusts as of September 30, 2025. A hypothetical 10% decrease in equity prices would reduce the fair values of these funds by $42.0 million.

**ITEM 4. CONTROLS AND PROCEDURES**

**Evaluation of disclosure controls and procedures**

As of the end of the period covered by this quarterly report, each of TXNM, PNM, and TNMP conducted an evaluation, under the supervision and with the participation of its management, including its Chief Executive Officer and Chief Financial Officer, of the effectiveness of the design and operation of the disclosure controls and procedures (as defined in Rules 13a-15(e) and 15d-15(e) under the Securities Exchange Act of 1934). Based upon this evaluation, the Chief Executive Officer and the Chief Financial Officer of each of TXNM, PNM, and TNMP concluded that the disclosure controls and procedures are effective.

**Changes in internal controls over financial reporting**

There have been no changes in each of TXNM's, PNM's, and TNMP's internal control over financial reporting (as such term is defined in Rules 13a-15(f) and 15d-15(f) under the Securities Exchange Act of 1934) during the quarter ended September 30, 2025, that have materially affected, or are reasonably likely to materially affect, each of TXNM's, PNM's, and TNMP's internal control over financial reporting.

**PART II. OTHER INFORMATION**

[None]

**ITEM 1. LEGAL PROCEEDINGS**

See Notes 11 and 12 for information related to the following matters, for TXNM, PNM, and TNMP, incorporated in this item by reference.

**Note 11**

- TXNM – Merger Related Litigation

**Note 12**

- TXNM – Merger Related Regulatory Applications
- PNM – Integrated Resource Plans
- PNM – Grid Modernization Plan
- TNMP – Transmission Cost of Service Rates
- TNMP – Periodic Distribution Rate Adjustment

**ITEM 1A. RISK FACTORS**

As of the date of this report, there have been no material changes with regard to the Risk Factors disclosed in TXNM's, PNM's, and TNMP's Annual Reports on Form 10-K for the year ended December 31, 2024, except as set forth below.

***Risks Relating to the Proposed Merger with Blackstone Infrastructure***

**There is no assurance when or if the proposed Merger will be completed.**

Completion of the proposed Merger is subject to the satisfaction or waiver of a number of conditions as set forth in the Merger Agreement, including regulatory approvals and other customary closing conditions. There can be no assurance that the conditions to completion of the proposed Merger will be satisfied or waived or that other events will not intervene to delay or result in the failure to close the proposed Merger. In addition, each of Blackstone Infrastructure and TXNM may unilaterally terminate the Merger Agreement under certain circumstances, and Blackstone Infrastructure and TXNM may agree at any time to terminate the Merger Agreement, even if TXNM shareholders have already approved the Merger Agreement and thereby approved the Merger and the other transactions contemplated by the Merger Agreement.

**Blackstone Infrastructure and TXNM may be unable to obtain the regulatory approvals required to complete the proposed Merger.**

In addition to other conditions set forth in the Merger Agreement, completion of the proposed Merger is conditioned upon the receipt of various state and U.S. federal regulatory approvals, including, but not limited to, expiration or termination of the applicable waiting period under HSR and approval by NMPRC, PUCT, FERC, and NRC. Blackstone Infrastructure and TXNM will make various filings and submissions and will pursue all required consents, orders and approvals in accordance with the Merger Agreement. These consents, orders and approvals may impose requirements, limitations or costs or place restrictions, and if such consents, orders and approvals require an extended period of time to be obtained, such extended period of time could increase the chance that an event occurs that constitutes a material adverse effect with respect to TXNM and thereby may allow Blackstone Infrastructure not to complete the proposed Merger. Such extended period of time also may increase the chance that other adverse effects with respect to TXNM could occur, such as the loss of key personnel. Further, no assurance can be given that the required consents, orders and approvals will be obtained or that the required conditions to closing will be satisfied.

**The announcement and pendency of the proposed Merger, during which TXNM is subject to certain operating restrictions, could have an adverse effect on TXNM's businesses, results of operations, financial condition, or cash flows.**

The announcement and pendency of the proposed Merger could disrupt TXNM's businesses, and uncertainty about the effect of the Merger may have an adverse effect on TXNM. These uncertainties could disrupt the business of TXNM and cause suppliers, vendors, partners, and others that deal with TXNM to defer entering into contracts with TXNM or making other decisions concerning TXNM or seek to change or cancel existing business relationships with TXNM. In addition, TXNM's employees may experience uncertainty regarding their roles after the Merger; for example, employees may depart either before the completion of the Merger because of such uncertainty and issues relating to the difficulty of coordination or a desire not to remain following the Merger; and the pendency of the Merger may adversely affect TXNM's ability to retain, recruit, and motivate key personnel. Additionally, the attention of TXNM's management may be directed towards the completion of the Merger including obtaining regulatory approvals and other transaction-related considerations and may be diverted from the day-to-day business operations of TXNM and matters related to the Merger may require commitments of time and resources that

could otherwise have been devoted to other opportunities that might have been beneficial to TXNM. Additionally, the Merger requires TXNM to obtain Blackstone Infrastructure's consent prior to taking certain specified actions while the Merger is pending. These restrictions may prevent TXNM from pursuing otherwise attractive business opportunities or other capital structure alternatives and making other changes to its business or executing certain of its business strategies prior to the completion of the Merger. Further, the Merger may give rise to potential liabilities, including as a result of pending and future shareholder lawsuits relating to the Merger. Any of these matters could adversely affect the businesses of, or harm the results of operations, financial condition or cash flows of TXNM.

**TXNM will incur substantial transaction fees and costs in connection with the proposed Merger.**

TXNM has incurred and expects to incur additional material non-recurring expenses in connection with the proposed Merger and completion of the transactions contemplated by the Merger Agreement. Further, even if the proposed Merger is not completed, TXNM will need to pay certain costs relating to the proposed Merger incurred prior to the date the proposed Merger was abandoned, such as legal, accounting, financial advisory, filing, and printing fees.

**The termination of the Merger Agreement could negatively impact TXNM.**

If the Merger is not completed for any reason, the ongoing business of TXNM may be adversely affected and, without realizing any of the anticipated benefits of having completed the Merger, TXNM would be subject to a number of risks, including the following:

- TXNM may experience negative reactions from the financial markets, including a decline of its stock price (which may reflect a market assumption that the Merger will be completed);
- TXNM may experience negative reactions from its customers, regulators and employees;
- TXNM may be required to pay certain costs relating to the Merger, whether or not the Merger is completed; and
- Matters relating to the Merger will have required substantial commitments of time and resources by TXNM management, which would otherwise have been devoted to day-to-day operations and other opportunities that may have been beneficial to TXNM as an independent company.

If the Merger Agreement is terminated and the Board seeks another merger, business combination or other transaction, TXNM shareholders cannot be certain that TXNM will be able to find a party willing to offer equivalent or more attractive consideration than the consideration TXNM shareholders would receive in the Merger. If the Merger Agreement is terminated under certain circumstances specified in the Merger Agreement (including if Blackstone Infrastructure terminates the Merger Agreement due to a change in recommendation of the Board or if TXNM terminates the Merger Agreement to accept a Superior Proposal), TXNM will be required to pay Blackstone Infrastructure a termination fee of $210.0 million, plus costs and expenses.

**Litigation may be instituted against TXNM and members of the Board challenging the proposed Merger, and adverse judgments in these lawsuits may prevent the proposed Merger from becoming effective within the expected timeframe or at all.**

TXNM and members of the Board may be named as defendants in putative class action lawsuits or other proceedings that may be brought by TXNM shareholders challenging the proposed Merger. If the plaintiffs in any of these actions seek a preliminary or permanent injunction and are successful in obtaining one, the parties may be prevented from completing the proposed Merger in the expected timeframe, if at all. Even if the plaintiffs in these potential actions are not successful in obtaining an injunction, they may nevertheless continue the action and seek damages after the transaction has closed. In addition, the costs of defending against such claims could adversely affect the financial condition of TXNM and such actions could adversely affect the reputation of TXNM and members of its Board or management.

Counsel for TXNM received a number of demand letters from law firms on behalf of individuals who are purported TXNM shareholders, accompanied by draft complaints naming TXNM and its directors as defendants and alleging that TXNM's preliminary proxy statement with respect to the Merger, omitted or misrepresented certain material information. Such draft complaints include a request for injunctive relief with respect to the TXNM shareholder vote to approve, and the closing of, the Merger, as well as other remedies, including counsel fees. TXNM believes that the allegations set forth in the demand letters and draft complaints are without merit and, if such complaints are actually filed, will defend such actions vigorously.

**The Merger Agreement contains provisions that could discourage a potential alternative acquirer that might be willing to pay more to acquire TXNM.**

The Merger Agreement contains customary "no shop" provisions which state that we will not solicit or facilitate proposals regarding a merger or similar transaction with another party except in certain limited circumstances. While the Board may withdraw or change its recommendation regarding the Merger Agreement in response to an unsolicited third-party proposal to acquire TXNM that the Board determines to be superior to the Merger, there are restrictions on its ability to do so, and in certain circumstances, TXNM may also be required to pay Blackstone Infrastructure a termination fee. These provisions could discourage a potential third-party acquirer from considering or proposing an alternative acquisition, even if it were prepared to pay consideration with a higher value than that proposed to be paid in the Merger.

**ITEM 5. OTHER INFORMATION**

During the three months ended September 30, 2025, no director or officer (as defined by Rule 16a-1(f) of the Exchange Act) of the Company adopted or terminated a "Rule 10b5-1 trading arrangement" or "non-Rule 10b5-1 trading arrangement," as each term is defined in Item 408(a) of Regulation S-K.

**ITEM 6. EXHIBITS**

| | | |
|---|---|---|
| 2.1 | TXNM | Agreement and Plan of Merger, dated as of May 18, 2025, by and among TXNM Energy, Inc., Troy ParentCo LLC and Troy Merger Sub Inc. (incorporated by reference to Exhibit 2.1 to TXNM's Current Report on Form 8-K filed May 19, 2025) |
| 3.1 | TXNM | Restated Articles of Incorporation of TXNM, as amended to date (incorporated by reference to Exhibit 3.1 to TXNM's Current Report on Form 8-K filed August 5, 2024) |
| 3.2 | PNM | Restated Articles of Incorporation of PNM, as amended through May 31, 2002 (incorporated by reference to Exhibit 3.1.1 to PNM's Quarterly Report on Form 10-Q for the quarter ended June 30, 2002) |
| 3.3 | TNMP | Articles of Incorporation of TNMP, as amended through July 7, 2005 (incorporated by reference to Exhibit 3.1.2 to TNMP's Quarterly Report on Form 10-Q for the quarter ended June 30, 2005) |
| 3.4 | TXNM | Bylaws of TXNM, with all amendments to and including August 2, 2024 (incorporated by reference to Exhibit 3.2 to TXNM's Current Report on Form 8-K filed August 5, 2024) |
| 3.5 | PNM | Bylaws of PNM, with all amendments to and including July 1, 2022 (incorporated by reference to Exhibit 3.5 to PNM's Current Report on Form 8-K filed July 1, 2022) |
| 3.6 | TNMP | Bylaws of TNMP, with all amendments to and including June 18, 2013 (incorporated by reference to Exhibit 3.6 to TNMP's Current Report on Form 8-K filed June 20, 2013) |
| 10.1 | TXNM | Distribution Agreement, dated August 15, 2025, by and among TXNM Energy, Inc., BofA Securities, Inc., MUFG Securities Americas Inc., RBC capital Markets, LLC and Scotia Capital (USA) Inc. (each as sales agent) and Bank of America, N.A., MUFG Securities EMEA plc., Royal Bank of Canada and the Bank of Nova Scotia (each as forward purchaser). (incorporated by reference to Exhibit 10.1 to TXNM's Current Report on Form 8-K filed August 15, 2025) |
| 31.1 | TXNM | Chief Executive Officer Certification Pursuant to Section 302 of the Sarbanes-Oxley Act of 2002 |
| 31.2 | TXNM | Chief Financial Officer Certification Pursuant to Section 302 of the Sarbanes-Oxley Act of 2002 |
| 31.3 | PNM | Chief Executive Officer Certification Pursuant to Section 302 of the Sarbanes-Oxley Act of 2002 |
| 31.4 | PNM | Chief Financial Officer Certification Pursuant to Section 302 of the Sarbanes-Oxley Act of 2002 |
| 31.5 | TNMP | Chief Executive Officer Certification Pursuant to Section 302 of the Sarbanes-Oxley Act of 2002 |
| 31.6 | TNMP | Chief Financial Officer Certification Pursuant to Section 302 of the Sarbanes-Oxley Act of 2002 |
| 32.1 | TXNM | Chief Executive Officer and Chief Financial Officer Certification Pursuant to Section 906 of the Sarbanes-Oxley Act of 2002 |
| 32.2 | PNM | Chief Executive Officer and Chief Financial Officer Certification Pursuant to Section 906 of the Sarbanes-Oxley Act of 2002 |
| 32.3 | TNMP | Chief Executive Officer and Chief Financial Officer Certification Pursuant to Section 906 of the Sarbanes-Oxley Act of 2002 |
| 101.INS | TXNM, PNM, and TNMP | XBRL Instance Document - The instance document does not appear in the interactive data file because XBRL tags are embedded within the Inline XBRL document |
| 101.SCH | TXNM, PNM, and TNMP | Inline XBRL Taxonomy Extension Schema Document |
| 101.CAL | TXNM, PNM, and TNMP | Inline XBRL Taxonomy Extension Calculation Linkbase Document |
| 101.DEF | TXNM, PNM, and TNMP | Inline XBRL Taxonomy Extension Definition Linkbase Document |
| 101.LAB | TXNM, PNM, and TNMP | Inline XBRL Taxonomy Extension Label Linkbase Document |
| 101.PRE | TXNM, PNM, and TNMP | Inline XBRL Taxonomy Extension Presentation Linkbase Document |
| 104 | TXNM, PNM, and TNMP | Cover Page Inline XBRL File (included in Exhibits 101) |

Table of Contents

**SIGNATURE**

Pursuant to the requirements of the Securities Exchange Act of 1934, the registrants have duly caused this report to be signed on their behalf by the undersigned thereunto duly authorized.

**TXNM ENERGY, INC.**
**PUBLIC SERVICE COMPANY OF NEW MEXICO**
**TEXAS-NEW MEXICO POWER COMPANY**

(Registrants)

Date: October 31, 2025

/s/ Gerald R. Bischoff

Gerald R. Bischoff
Vice President and Corporate Controller
(Officer duly authorized to sign this report)

TXNM Energy, Inc.
414 Silver Ave. SW
Albuquerque, NM 87102-3289

**EXHIBIT 31.1**
**CERTIFICATION**

I, Joseph D. Tarry, certify that:

1. I have reviewed this Quarterly Report on Form 10-Q of TXNM Energy, Inc.;

2. Based on my knowledge, this report does not contain any untrue statement of a material fact or omit to state a material fact necessary to make the statements made, in light of the circumstances under which such statements were made, not misleading with respect to the period covered by this report;

3. Based on my knowledge, the financial statements, and other financial information included in this report, fairly present in all material respects the financial condition, results of operations and cash flows of the registrant as of, and for, the periods presented in this report;

4. The registrant's other certifying officer and I are responsible for establishing and maintaining disclosure controls and procedures (as defined in Exchange Act Rules 13a-15(e) and 15d-15(e)) and internal control over financial reporting (as defined in Exchange Act Rules 13a-15(f) and 15d-15(f)) for the registrant and have:

    a) Designed such disclosure controls and procedures, or caused such disclosure controls and procedures to be designed under our supervision, to ensure that material information relating to the registrant, including its consolidated subsidiaries, is made known to us by others within those entities, particularly during the period in which this report is being prepared;

    b) Designed such internal control over financial reporting, or caused such internal control over financial reporting to be designed under our supervision, to provide reasonable assurance regarding the reliability of financial reporting and the preparation of financial statements for external purposes in accordance with generally accepted accounting principles;

    c) Evaluated the effectiveness of the registrant's disclosure controls and procedures and presented in this report our conclusions about the effectiveness of the disclosure controls and procedures, as of the end of the period covered by this report based on such evaluation; and

    d) Disclosed in this report any change in the registrant's internal control over financial reporting that occurred during the registrant's most recent fiscal quarter (each registrant's fourth fiscal quarter in the case of an annual report) that has materially affected, or is reasonably likely to materially affect, the registrant's internal control over financial reporting; and

5. The registrant's other certifying officer and I have disclosed, based on our most recent evaluation of internal control over financial reporting, to the registrant's auditors and the audit committee of the registrant's board of directors (or persons performing the equivalent functions):

    a) All significant deficiencies and material weaknesses in the design or operation of internal controls over financial reporting which are reasonably likely to adversely affect the registrant's ability to record, process, summarize and report financial information; and

    b) Any fraud, whether or not material, that involves management or other employees who have a significant role in the registrant's internal control over financial reporting.

Date: October 31, 2025

By: /s/ Joseph D. Tarry
Joseph D. Tarry
President and Chief Executive Officer
TXNM Energy, Inc.

TXNM Energy, Inc.
414 Silver Ave. SW
Albuquerque, NM 87102-3289

**EXHIBIT 31.2**
**CERTIFICATION**

I, Henry E. Monroy, certify that:

1. I have reviewed this Quarterly Report on Form 10-Q of TXNM Energy, Inc.;

2. Based on my knowledge, this report does not contain any untrue statement of a material fact or omit to state a material fact necessary to make the statements made, in light of the circumstances under which such statements were made, not misleading with respect to the period covered by this report;

3. Based on my knowledge, the financial statements, and other financial information included in this report, fairly present in all material respects the financial condition, results of operations and cash flows of the registrant as of, and for, the periods presented in this report;

4. The registrant's other certifying officer and I are responsible for establishing and maintaining disclosure controls and procedures (as defined in Exchange Act Rules 13a-15(e) and 15d-15(e)) and internal control over financial reporting (as defined in Exchange Act Rules 13a-15(f) and 15d-15(f)) for the registrant and have:

    a) Designed such disclosure controls and procedures, or caused such disclosure controls and procedures to be designed under our supervision, to ensure that material information relating to the registrant, including its consolidated subsidiaries, is made known to us by others within those entities, particularly during the period in which this report is being prepared;

    b) Designed such internal control over financial reporting, or caused such internal control over financial reporting to be designed under our supervision, to provide reasonable assurance regarding the reliability of financial reporting and the preparation of financial statements for external purposes in accordance with generally accepted accounting principles;

    c) Evaluated the effectiveness of the registrant's disclosure controls and procedures and presented in this report our conclusions about the effectiveness of the disclosure controls and procedures, as of the end of the period covered by this report based on such evaluation; and

    d) Disclosed in this report any change in the registrant's internal control over financial reporting that occurred during the registrant's most recent fiscal quarter (each registrant's fourth fiscal quarter in the case of an annual report) that has materially affected, or is reasonably likely to materially affect, the registrant's internal control over financial reporting; and

5. The registrant's other certifying officer and I have disclosed, based on our most recent evaluation of internal control over financial reporting, to the registrant's auditors and the audit committee of the registrant's board of directors (or persons performing the equivalent functions):

    a) All significant deficiencies and material weaknesses in the design or operation of internal controls over financial reporting which are reasonably likely to adversely affect the registrant's ability to record, process, summarize and report financial information; and

    b) Any fraud, whether or not material, that involves management or other employees who have a significant role in the registrant's internal control over financial reporting.

Date: October 31, 2025

By: /s/ Henry E. Monroy
Henry E. Monroy
Senior Vice President and Chief Financial Officer
TXNM Energy, Inc.

Public Service Company of New Mexico
414 Silver Ave. SW
Albuquerque, NM 87102-3289

**EXHIBIT 31.3**
**CERTIFICATION**

I, Joseph D. Tarry, certify that:

1. I have reviewed this Quarterly Report on Form 10-Q of Public Service Company of New Mexico;

2. Based on my knowledge, this report does not contain any untrue statement of a material fact or omit to state a material fact necessary to make the statements made, in light of the circumstances under which such statements were made, not misleading with respect to the period covered by this report;

3. Based on my knowledge, the financial statements, and other financial information included in this report, fairly present in all material respects the financial condition, results of operations and cash flows of the registrant as of, and for, the periods presented in this report;

4. The registrant's other certifying officer and I are responsible for establishing and maintaining disclosure controls and procedures (as defined in Exchange Act Rules 13a-15(e) and 15d-15(e)) and internal control over financial reporting (as defined in Exchange Act Rules 13a-15(f) and 15d-15(f)) for the registrant and have:

    a) Designed such disclosure controls and procedures, or caused such disclosure controls and procedures to be designed under our supervision, to ensure that material information relating to the registrant, including its consolidated subsidiaries, is made known to us by others within those entities, particularly during the period in which this report is being prepared;

    b) Designed such internal control over financial reporting, or caused such internal control over financial reporting to be designed under our supervision, to provide reasonable assurance regarding the reliability of financial reporting and the preparation of financial statements for external purposes in accordance with generally accepted accounting principles;

    c) Evaluated the effectiveness of the registrant's disclosure controls and procedures and presented in this report our conclusions about the effectiveness of the disclosure controls and procedures, as of the end of the period covered by this report based on such evaluation; and

    d) Disclosed in this report any change in the registrant's internal control over financial reporting that occurred during the registrant's most recent fiscal quarter (each registrant's fourth fiscal quarter in the case of an annual report) that has materially affected, or is reasonably likely to materially affect, the registrant's internal control over financial reporting; and

5. The registrant's other certifying officer and I have disclosed, based on our most recent evaluation of internal control over financial reporting, to the registrant's auditors and the audit committee of the registrant's board of directors (or persons performing the equivalent functions):

    a) All significant deficiencies and material weaknesses in the design or operation of internal controls over financial reporting which are reasonably likely to adversely affect the registrant's ability to record, process, summarize and report financial information; and

    b) Any fraud, whether or not material, that involves management or other employees who have a significant role in the registrant's internal control over financial reporting.

Date: October 31, 2025

By: /s/ Joseph D. Tarry

Joseph D. Tarry
President and Chief Executive Officer
Public Service Company of New Mexico

Public Service Company of New Mexico
414 Silver Ave. SW
Albuquerque, NM 87102-3289

**EXHIBIT 31.4**
**CERTIFICATION**

I, Henry E. Monroy, certify that:

1. I have reviewed this Quarterly Report on Form 10-Q of Public Service Company of New Mexico;

2. Based on my knowledge, this report does not contain any untrue statement of a material fact or omit to state a material fact necessary to make the statements made, in light of the circumstances under which such statements were made, not misleading with respect to the period covered by this report;

3. Based on my knowledge, the financial statements, and other financial information included in this report, fairly present in all material respects the financial condition, results of operations and cash flows of the registrant as of, and for, the periods presented in this report;

4. The registrant's other certifying officer and I are responsible for establishing and maintaining disclosure controls and procedures (as defined in Exchange Act Rules 13a-15(e) and 15d-15(e)) and internal control over financial reporting (as defined in Exchange Act Rules 13a-15(f) and 15d-15(f)) for the registrant and have:

    a) Designed such disclosure controls and procedures, or caused such disclosure controls and procedures to be designed under our supervision, to ensure that material information relating to the registrant, including its consolidated subsidiaries, is made known to us by others within those entities, particularly during the period in which this report is being prepared;

    b) Designed such internal control over financial reporting, or caused such internal control over financial reporting to be designed under our supervision, to provide reasonable assurance regarding the reliability of financial reporting and the preparation of financial statements for external purposes in accordance with generally accepted accounting principles;

    c) Evaluated the effectiveness of the registrant's disclosure controls and procedures and presented in this report our conclusions about the effectiveness of the disclosure controls and procedures, as of the end of the period covered by this report based on such evaluation; and

    d) Disclosed in this report any change in the registrant's internal control over financial reporting that occurred during the registrant's most recent fiscal quarter (each registrant's fourth fiscal quarter in the case of an annual report) that has materially affected, or is reasonably likely to materially affect, the registrant's internal control over financial reporting; and

5. The registrant's other certifying officer and I have disclosed, based on our most recent evaluation of internal control over financial reporting, to the registrant's auditors and the audit committee of the registrant's board of directors (or persons performing the equivalent functions):

    a) All significant deficiencies and material weaknesses in the design or operation of internal controls over financial reporting which are reasonably likely to adversely affect the registrant's ability to record, process, summarize and report financial information; and

    b) Any fraud, whether or not material, that involves management or other employees who have a significant role in the registrant's internal control over financial reporting.

Date: October 31, 2025

By: /s/ Henry E. Monroy
Henry E. Monroy
Senior Vice President and Chief Financial Officer

Public Service Company of New Mexico

Texas-New Mexico Power Company
577 N. Garden Ridge Blvd.
Lewisville, Texas 75067

**EXHIBIT 31.5**
**CERTIFICATION**

I, Joseph D. Tarry, certify that:

1. I have reviewed this Quarterly Report on Form 10-Q of Texas-New Mexico Power Company;

2. Based on my knowledge, this report does not contain any untrue statement of a material fact or omit to state a material fact necessary to make the statements made, in light of the circumstances under which such statements were made, not misleading with respect to the period covered by this report;

3. Based on my knowledge, the financial statements, and other financial information included in this report, fairly present in all material respects the financial condition, results of operations and cash flows of the registrant as of, and for, the periods presented in this report;

4. The registrant's other certifying officer and I are responsible for establishing and maintaining disclosure controls and procedures (as defined in Exchange Act Rules 13a-15(e) and 15d-15(e)) and internal control over financial reporting (as defined in Exchange Act Rules 13a-15(f) and 15d-15(f)) for the registrant and have:

    a) Designed such disclosure controls and procedures, or caused such disclosure controls and procedures to be designed under our supervision, to ensure that material information relating to the registrant, including its consolidated subsidiaries, is made known to us by others within those entities, particularly during the period in which this report is being prepared;

    b) Designed such internal control over financial reporting, or caused such internal control over financial reporting to be designed under our supervision, to provide reasonable assurance regarding the reliability of financial reporting and the preparation of financial statements for external purposes in accordance with generally accepted accounting principles;

    c) Evaluated the effectiveness of the registrant's disclosure controls and procedures and presented in this report our conclusions about the effectiveness of the disclosure controls and procedures, as of the end of the period covered by this report based on such evaluation; and

    d) Disclosed in this report any change in the registrant's internal control over financial reporting that occurred during the registrant's most recent fiscal quarter (each registrant's fourth fiscal quarter in the case of an annual report) that has materially affected, or is reasonably likely to materially affect, the registrant's internal control over financial reporting; and

5. The registrant's other certifying officer and I have disclosed, based on our most recent evaluation of internal control over financial reporting, to the registrant's auditors and the audit committee of the registrant's board of directors (or persons performing the equivalent functions):

    a) All significant deficiencies and material weaknesses in the design or operation of internal controls over financial reporting which are reasonably likely to adversely affect the registrant's ability to record, process, summarize and report financial information; and

    b) Any fraud, whether or not material, that involves management or other employees who have a significant role in the registrant's internal control over financial reporting.

Date: October 31, 2025

By: /s/ Joseph D. Tarry

Joseph D. Tarry
Chief Executive Officer
Texas-New Mexico Power Company

Texas-New Mexico Power Company
577 N. Garden Ridge Blvd.
Lewisville, Texas 75067

**EXHIBIT 31.6**
**CERTIFICATION**

I, Henry E. Monroy, certify that:

1. I have reviewed this Quarterly Report on Form 10-Q of Texas-New Mexico Power Company;

2. Based on my knowledge, this report does not contain any untrue statement of a material fact or omit to state a material fact necessary to make the statements made, in light of the circumstances under which such statements were made, not misleading with respect to the period covered by this report;

3. Based on my knowledge, the financial statements, and other financial information included in this report, fairly present in all material respects the financial condition, results of operations and cash flows of the registrant as of, and for, the periods presented in this report;

4. The registrant's other certifying officer and I are responsible for establishing and maintaining disclosure controls and procedures (as defined in Exchange Act Rules 13a-15(e) and 15d-15(e)) and internal control over financial reporting (as defined in Exchange Act Rules 13a-15(f) and 15d-15(f)) for the registrant and have:

    a) Designed such disclosure controls and procedures, or caused such disclosure controls and procedures to be designed under our supervision, to ensure that material information relating to the registrant, including its consolidated subsidiaries, is made known to us by others within those entities, particularly during the period in which this report is being prepared;

    b) Designed such internal control over financial reporting, or caused such internal control over financial reporting to be designed under our supervision, to provide reasonable assurance regarding the reliability of financial reporting and the preparation of financial statements for external purposes in accordance with generally accepted accounting principles;

    c) Evaluated the effectiveness of the registrant's disclosure controls and procedures and presented in this report our conclusions about the effectiveness of the disclosure controls and procedures, as of the end of the period covered by this report based on such evaluation; and

    d) Disclosed in this report any change in the registrant's internal control over financial reporting that occurred during the registrant's most recent fiscal quarter (each registrant's fourth fiscal quarter in the case of an annual report) that has materially affected, or is reasonably likely to materially affect, the registrant's internal control over financial reporting; and

5. The registrant's other certifying officer and I have disclosed, based on our most recent evaluation of internal control over financial reporting, to the registrant's auditors and the audit committee of the registrant's board of directors (or persons performing the equivalent functions):

    a) All significant deficiencies and material weaknesses in the design or operation of internal controls over financial reporting which are reasonably likely to adversely affect the registrant's ability to record, process, summarize and report financial information; and

    b) Any fraud, whether or not material, that involves management or other employees who have a significant role in the registrant's internal control over financial reporting.

Date: October 31, 2025

By: /s/ Henry E. Monroy
Henry E. Monroy
Senior Vice President and Chief Financial Officer
Texas-New Mexico Power Company

TXNM Energy, Inc.
414 Silver Ave. SW
Albuquerque, NM 87102-3289
www.txnmenergy.com

**EXHIBIT 32.1**

**CERTIFICATION PURSUANT TO 18 U.S.C. § 1350, AS ADOPTED PURSUANT TO § 906 OF THE SARBANES-OXLEY ACT OF 2002**

In connection with the Quarterly Report on Form 10-Q for the period ended September 30, 2025, for TXNM Energy, Inc. ("Company"), as filed with the Securities and Exchange Commission on October 31, 2025 ("Report"), each of the undersigned officers of the Company certifies, pursuant to 18 U.S.C. §1350, as adopted pursuant to § 906 of the Sarbanes-Oxley Act of 2002, that:

(1) the Report fully complies with the requirements of § 13(a) or 15(d) of the Securities Exchange Act of 1934, as amended; and
(2) the information contained in the Report fairly presents, in all material respects, the financial condition and results of operations of the Company.

Date: October 31, 2025

By: /s/ Joseph D. Tarry
Joseph D. Tarry
President and Chief Executive Officer
TXNM Energy, Inc.

By: /s/ Henry E. Monroy
Henry E. Monroy
Senior Vice President and Chief Financial Officer
TXNM Energy, Inc.

Public Service Company of New Mexico
414 Silver Ave. SW
Albuquerque, NM 87102-3289

**EXHIBIT 32.2**

**CERTIFICATION PURSUANT TO 18 U.S.C. § 1350, AS ADOPTED PURSUANT TO § 906 OF THE SARBANES-OXLEY ACT OF 2002**

In connection with the Quarterly Report on Form 10-Q for the period ended September 30, 2025, for Public Service Company of New Mexico ("Company"), as filed with the Securities and Exchange Commission on October 31, 2025 ("Report"), each of the undersigned officers of the Company certifies, pursuant to 18 U.S.C. §1350, as adopted pursuant to § 906 of the Sarbanes-Oxley Act of 2002, that:

(1) the Report fully complies with the requirements of § 13(a) or 15(d) of the Securities Exchange Act of 1934, as amended; and
(2) the information contained in the Report fairly presents, in all material respects, the financial condition and results of operations of the Company.

Date: October 31, 2025

By: /s/ Joseph D. Tarry
Joseph D. Tarry
President and Chief Executive Officer
Public Service Company of New Mexico

By: /s/ Henry E. Monroy
Henry E. Monroy
Senior Vice President and Chief Financial Officer
Public Service Company of New Mexico

Texas-New Mexico Power Company
577 N. Garden Ridge Blvd.
Lewisville, Texas 75067

**EXHIBIT 32.3**

**CERTIFICATION PURSUANT TO 18 U.S.C. § 1350, AS ADOPTED PURSUANT TO § 906 OF THE SARBANES-OXLEY ACT OF 2002**

In connection with the Quarterly Report on Form 10-Q for the period ended September 30, 2025, for Texas-New Mexico Power Company ("Company"), as filed with the Securities and Exchange Commission on October 31, 2025 ("Report"), each of the undersigned officers of the Company certifies, pursuant to 18 U.S.C. §1350, as adopted pursuant to §906 of the Sarbanes-Oxley Act of 2002, that:

(1) the Report fully complies with the requirements of § 13(a) or 15(d) of the Securities Exchange Act of 1934, as amended; and
(2) the information contained in the Report fairly presents, in all material respects, the financial condition and results of operations of the Company.

Date: October 31, 2025

By: /s/ Joseph D. Tarry
Joseph D. Tarry
Chief Executive Officer
Texas-New Mexico Power Company

By: /s/ Henry E. Monroy
Henry E. Monroy
Senior Vice President and Chief Financial Officer
Texas-New Mexico Power Company

Schedule Q-4 Reports to the Securities and Exchange Commission

# June 30, 2025

Attachments to this document are available to the public and can be found at *https://www.txnmenergy.com/investors/financial-information/sec-filings.aspx* or can be retrieved from the NMPRC Records website.

Table of Contents

**UNITED STATES**
**SECURITIES AND EXCHANGE COMMISSION**
Washington, D.C. 20549

**FORM 10-Q**

(Mark One)

☒ QUARTERLY REPORT PURSUANT TO SECTION 13 OR 15(d) OF THE SECURITIES EXCHANGE ACT OF 1934

**For the quarterly period ended June 30, 2025**

☐ TRANSITION REPORT PURSUANT TO SECTION 13 OR 15(d) OF THE SECURITIES EXCHANGE ACT OF 1934

**For the transition period from _____ to _____**

Name of Registrant, State of Incorporation, Address Of Principal Executive Offices, Telephone Number, Commission File No., IRS Employer Identification No.

**TXNM Energy, Inc.**
(A New Mexico Corporation)
414 Silver Ave. SW
Albuquerque, New Mexico 87102-3289
Telephone Number - (505) 241-2700
Commission File No. - 001-32462
IRS Employer Identification No. - 85-0468296

**Public Service Company of New Mexico**
(A New Mexico Corporation)
414 Silver Ave. SW
Albuquerque, New Mexico 87102-3289
Telephone Number - (505) 241-2700
Commission File No. - 001-06986
IRS Employer Identification No. - 85-0019030

**Texas-New Mexico Power Company**
(A Texas Corporation)
577 N. Garden Ridge Blvd.
Lewisville, Texas 75067
Telephone Number - (972) 420-4189
Commission File No. - 002-97230
IRS Employer Identification No. - 75-0204070

---

Securities registered pursuant to Section 12(b) of the Act:

| Registrant | Title of each class | Trading Symbol(s) | Name of exchange on which registered |
|---|---|---|---|
| TXNM Energy, Inc. | Common Stock, no par value | TXNM | New York Stock Exchange |

Indicate by check mark whether each registrant (1) has filed all reports required to be filed by Section 13 or 15(d) of the Securities Exchange Act of 1934 during the preceding 12 months (or for such shorter period that the registrant was required to file such reports), and (2) has been subject to such filing requirements for the past 90 days.

| | | | | |
|---|---|---|---|---|
| TXNM Energy, Inc. (“TXNM”) | Yes | ☑ | No | ☐ |
| Public Service Company of New Mexico (“PNM”) | Yes | ☑ | No | ☐ |
| Texas-New Mexico Power Company (“TNMP”) | Yes | ☐ | No | ☑ |

(NOTE: As a voluntary filer, not subject to the filing requirements, TNMP filed all reports under Section 13 or 15(d) of the Securities Exchange Act of 1934 during the preceding 12 months.)

Table of Contents

Indicate by check mark whether each registrant has submitted electronically every Interactive Data File required to be submitted pursuant to Rule 405 of Regulation S-T during the preceding 12 months (or for such shorter period that the registrant was required to submit such files).

| | | | | |
|---|---|---|---|---|
| TXNM | Yes | ☑ | No | ☐ |
| PNM | Yes | ☑ | No | ☐ |
| TNMP | Yes | ☑ | No | ☐ |

Indicate by check mark whether registrant is a large accelerated filer, an accelerated filer, a non-accelerated filer, smaller reporting company, or an emerging growth company. See the definitions of "large accelerated filer," "accelerated filer," "smaller reporting company," and "emerging growth company" in Rule 12b-2 of the Exchange Act.

| | Large accelerated filer | Accelerated filer | Non-accelerated filer | Smaller reporting company | Emerging growth company |
|---|---|---|---|---|---|
| TXNM | ☑ | ☐ | ☐ | ☐ | ☐ |
| | Large accelerated filer | Accelerated filer | Non-accelerated filer | Smaller reporting company | Emerging growth company |
| PNM | ☐ | ☐ | ☑ | ☐ | ☐ |
| | Large accelerated filer | Accelerated filer | Non-accelerated filer | Smaller reporting company | Emerging growth company |
| TNMP | ☐ | ☐ | ☑ | ☐ | ☐ |

If an emerging growth company, indicate by check mark if the registrant has elected not to use the extended transition period for complying with any new or revised financial accounting standards provided pursuant to Section 13(a) of the Exchange Act. ☐

Indicate by check mark whether any of the registrants is a shell company (as defined in Rule 12b-2 of the Exchange Act). Yes ☐ No ☑

As of July 25, 2025, 105,378,979 shares of common stock, no par value per share, of TXNM were outstanding.

The total number of shares of common stock of PNM, no par value per share, outstanding as of July 25, 2025, was 39,117,799 all held by TXNM (and none held by non-affiliates).

The total number of shares of common stock of TNMP, $10 par value per share, outstanding as of July 25, 2025, was 6,358 all held indirectly by TXNM (and none held by non-affiliates).

**PNM AND TNMP MEET THE CONDITIONS SET FORTH IN GENERAL INSTRUCTIONS (H) (1) (a) AND (b) OF FORM 10-Q AND ARE THEREFORE FILING THIS FORM WITH THE REDUCED DISCLOSURE FORMAT PURSUANT TO GENERAL INSTRUCTION (H) (2).**

This combined Form 10-Q is separately filed by TXNM, PNM, and TNMP. Information contained herein relating to any individual registrant is filed by such registrant on its own behalf. Each registrant makes no representation as to information relating to the other registrants. When this Form 10-Q is incorporated by reference into any filing with the SEC made by TXNM, PNM, or TNMP, as a registrant, the portions of this Form 10-Q that relate to each other registrant are not incorporated by reference therein.

Table of Contents

**TXNM ENERGY, INC. AND SUBSIDIARIES**
**PUBLIC SERVICE COMPANY OF NEW MEXICO AND SUBSIDIARIES**
**TEXAS-NEW MEXICO POWER COMPANY AND SUBSIDIARIES**

**INDEX**


| | Page No. |
|---|---|
| **GLOSSARY** | 4 |
| **PART I. FINANCIAL INFORMATION** | |
| **ITEM 1. FINANCIAL STATEMENTS (UNAUDITED)** | |
| **TXNM ENERGY, INC. AND SUBSIDIARIES** | |
| Condensed Consolidated Statements of Earnings | 8 |
| Condensed Consolidated Statements of Comprehensive Income | 9 |
| Condensed Consolidated Statements of Cash Flows | 10 |
| Condensed Consolidated Balance Sheets | 12 |
| Condensed Consolidated Statements of Changes in Equity | 14 |
| **PUBLIC SERVICE COMPANY OF NEW MEXICO AND SUBSIDIARIES** | |
| Condensed Consolidated Statements of Earnings | 15 |
| Condensed Consolidated Statements of Comprehensive Income | 16 |
| Condensed Consolidated Statements of Cash Flows | 17 |
| Condensed Consolidated Balance Sheets | 19 |
| Condensed Consolidated Statements of Changes in Equity | 21 |
| **TEXAS-NEW MEXICO POWER COMPANY AND SUBSIDIARIES** | |
| Condensed Consolidated Statements of Earnings | 22 |
| Condensed Consolidated Statements of Cash Flows | 23 |
| Condensed Consolidated Balance Sheets | 24 |
| Condensed Consolidated Statements of Changes in Common Stockholder's Equity | 26 |
| **NOTES TO CONDENSED CONSOLIDATED FINANCIAL STATEMENTS** | 27 |
| **ITEM 2. MANAGEMENT'S DISCUSSION AND ANALYSIS OF FINANCIAL CONDITION AND RESULTS OF OPERATIONS** | 76 |
| **ITEM 3. QUANTITATIVE AND QUALITATIVE DISCLOSURES ABOUT MARKET RISK** | 109 |
| **ITEM 4. CONTROLS AND PROCEDURES** | 111 |
| **PART II. OTHER INFORMATION** | |
| **ITEM 1. LEGAL PROCEEDINGS** | 112 |
| **ITEM 1A. RISK FACTORS** | 112 |
| **ITEM 5. OTHER INFORMATION** | 114 |
| **ITEM 6. EXHIBITS** | 114 |
| **SIGNATURE** | 117 |

Table of Contents

**GLOSSARY**

Definitions:

| | |
|---|---|
| 2024 Rate Change | PNM's request for a general increase in electric rates filed with the NMPRC on December 5, 2022 using a calendar year 2024 FTY |
| 2025 Rate Request | PNM's request for a general increase in electric rates filed with the NMPRC on June 14, 2024 using a FTY beginning July 1, 2025 |
| 2028 Resource Application | PNM's November 22, 2024 application with the NMPRC for approval of resources to be available for the 2028 summer peak |
| ACE Rule | Affordable Clean Energy Rule |
| AEP OnSite Partners | AEP OnSite Partners, LLC, a subsidiary of American Electric Power, Inc. until the completion of its sale on September 30, 2024 to Basalt Infrastructure Partners LLC |
| AFUDC | Allowance for Funds Used During Construction |
| AOCI | Accumulated Other Comprehensive Income |
| APS | Arizona Public Service Company, the operator and a co-owner of PVNGS and Four Corners |
| ARO | Asset Retirement Obligation |
| ARP | Alternative Revenue Program |
| ASU | Accounting Standards Update |
| Blackstone Infrastructure | Blackstone Infrastructure Partners L.P. |
| Board | Board of Directors of TXNM |
| CAA | Clean Air Act |
| CAISO | California Independent System Operator |
| Carbon Pollution Standards | Carbon Pollution Standards established by the EPA on August 3, 2015 |
| CCN | Certificate of Convenience and Necessity |
| CCR | Coal Combustion Residuals |
| CCS | Carbon Capture and Storage/Sequestration |
| CIAC | Contributions in Aid of Construction |
| $CO_2$ | Carbon Dioxide |
| CODM | Chief Operating Decision Maker |
| Community Solar Act | Senate Bill 84 effective June 18, 2021 |
| Convertible Notes | TXNM's $550.0 million junior subordinated convertible notes issued on June 10, 2024 and June 21, 2024 |
| COVID-19 | Novel coronavirus global pandemic |
| DC Circuit | United States Court of Appeals for the District of Columbia Circuit |
| DCRF | TNMP's applications for a distribution cost recovery factor |
| DOE | United States Department of Energy |
| EEI | Edison Electric Institute, an association representing all U.S. investor-owned electric companies |
| Effective Time | The time the Merger is consummated |
| EGU | Electric Generating Unit |
| EIM | Western Energy Imbalance Market developed and operated by CAISO |
| ELG | Effluent Limitation Guidelines |
| Energy Transition Charge(s) | Rate rider established to collect non-bypassable customer charges for repayment of the ETBC I Securitized Bonds |
| EPA | United States Environmental Protection Agency |
| ERCOT | Electric Reliability Council of Texas |
| ESA(s) | Energy Storage Agreement(s) |
| ETA | The New Mexico Energy Transition Act |
| ETBC I | PNM Energy Transition Bond Company I, LLC, formed on August 25, 2023 |
| ETBC I Securitized Bonds | On November 15, 2023, ETBC I issued $343.2 million aggregate principal amount of its senior secured energy transition bonds, Series A in two tranches |
| EUEA | The New Mexico Efficient Use of Energy Act |
| EV | Electric Vehicle |
| Exchange Act | Securities Exchange Act of 1934, as amended |
| FASB | Financial Accounting Standards Board |
| FERC | Federal Energy Regulatory Commission |
| FIP | Federal Implementation Plan |
| FMB | First Mortgage Bond |
| Four Corners | Four Corners Power Plant |
| Four Corners CSA | Four Corners' coal supply contract with NTEC |
| FPPAC | Fuel and Purchased Power Adjustment Clause |

Table of Contents

| | |
|---|---|
| FTY | Future Test Year |
| GAAP | Generally Accepted Accounting Principles in the United States of America |
| GHG | Greenhouse Gas |
| Grid Modernization Plan | PNM's NMPRC approved plan for grid modernization that includes investments of approximately $344 million for the first six years of a broader 11-year strategy |
| GWh | Gigawatt hours |
| INDC | Intended Nationally Determined Contribution |
| IRA | Inflation Reduction Act of 2022 |
| IRC | Internal Revenue Code |
| IRP | Integrated Resource Plan |
| IRS | Internal Revenue Service |
| ISFSI | Independent Spent Fuel Storage Installation |
| kV | Kilovolt |
| KW | Kilowatt |
| KWh | Kilowatt Hour |
| La Joya Wind II | La Joya Wind Facility generating 140 MW of output |
| Lightning Dock Geothermal | Lightning Dock geothermal power facility, also known as the Dale Burgett Geothermal Plant |
| MD&A | Management's Discussion and Analysis of Financial Condition and Results of Operations |
| Merger | The merger of TXNM pursuant to the Merger Agreement, with TXNM surviving as a direct, wholly-owned subsidiary of Parent (an affiliate of Blackstone Infrastructure Partners L.P.) |
| Merger Agreement | The Agreement and Plan of Merger, dated May 18, 2025, by and among TXNM, Parent, and Merger Sub |
| Merger Sub | Troy Merger Sub Inc., a New Mexico corporation, direct subsidiary of Parent and affiliate of Blackstone Infrastructure Partners L.P., which will merge with and into TXNM at the Effective Time of the Merger |
| Meta | Meta Platform, Inc., formerly known as Facebook Inc. |
| MMBTU | Million British Thermal Units |
| Moody's | Moody's Investor Services, Inc. |
| MW | Megawatt |
| MWh | Megawatt Hour |
| NAAQS | National Ambient Air Quality Standards |
| NAV | Net asset value |
| NDT | Nuclear Decommissioning Trusts for PVNGS |
| NEE | New Energy Economy |
| New Mexico Wind | New Mexico Wind Energy Center |
| NM | New Mexico |
| NM 2015 Rate Case | Request for a General Increase in Electric Rates Field by PNM on August 27, 2015 |
| NM 2016 Rate Case | Request for a General Increase in Electric Rates Filed by PNM on December 7, 2016 |
| NM Supreme Court | New Mexico Supreme Court |
| NMED | New Mexico Environment Department |
| NMMMD | The Mining and Minerals Division of the New Mexico Energy, Minerals and Natural Resources Department |
| NMPRC | New Mexico Public Regulation Commission |
| NMRD | NM Renewable Development, LLC, previously owned 50% each by PNMR Development and AEP OnSite Partners, LLC ("AEP OnSite Partners") |
| NOx | Nitrogen Oxides |
| NPDES | National Pollutant Discharge Elimination System |
| NRC | United States Nuclear Regulatory Commission |
| NTEC | Navajo Transitional Energy Company, LLC, an entity owned by the Navajo Nation |
| OBBBA | One Big Beautiful Bill Act of 2025 |
| OCI | Other Comprehensive Income |
| OMB | Office of Management and Budget |
| OPEB | Other Post-Employment Benefits |
| OSM | United States Office of Surface Mining Reclamation and Enforcement |
| Parent | Troy ParentCo LLC, a Delaware limited liability company and an affiliate of Blackstone Infrastructure Partners L.P. |
| Paris Agreement | A legally binding international treaty on climate change adopted on December 12, 2015 |
| Pattern Wind | Pattern New Mexico Wind, LLC, an affiliate of Western Spirit and Pattern Development |
| PCRBs | Pollution Control Revenue Bonds |
| PEP | Performance Equity Plan |

Table of Contents

| | |
|---|---|
| PM | Particulate Matter |
| PNM | Public Service Company of New Mexico and Subsidiaries |
| PNM New Mexico Credit Facility | PNM's $40.0 million Unsecured Revolving Credit Facility |
| PNM 2024 Term Loan | PNM's $200.0 million term loan that matures on November 10, 2025 |
| PNM 2025 Term Loan | PNM's $195.0 Million Unsecured Term Loan issued on January 21, 2025 |
| PNM April 2025 Note Purchase Agreement | PNM's agreement for sale of PNM's April 2025 SUNs |
| PNM April 2025 SUNs | PNM's $300.0 million Senior Unsecured Notes issued on April 23, 2025 |
| PNM Revolving Credit Facility | PNM's $400.0 million Unsecured Revolving Credit Facility |
| PNMR Development | PNMR Development and Management Company, an unregulated wholly-owned subsidiary of TXNM |
| PPA | Power Purchase Agreement |
| PUCT | Public Utility Commission of Texas |
| PV | Photovoltaic |
| PVNGS | Palo Verde Nuclear Generating Station |
| RD | Recommended Decision |
| REA | New Mexico's Renewable Energy Act of 2004 |
| RECs | Renewable Energy Certificates |
| Red Mesa Wind | Red Mesa Wind Energy Center |
| REP(s) | Retail Electricity Provider |
| RFP | Request for Proposal |
| ROE | Return on Equity |
| RPS | Renewable Energy Portfolio Standard |
| S&P | Standard and Poor's Ratings Services |
| SEC | United States Securities and Exchange Commission |
| Securities Act | Securities Act of 1933, as amended |
| Securitized Bonds | Energy transition bonds |
| SIP | State Implementation Plan |
| SJGS | San Juan Generating Station |
| $SO_2$ | Sulfur Dioxide |
| SOFR | Secured Overnight Financing Rate |
| SRP | TNMP's System Resiliency Plan |
| SUNs | Senior Unsecured Notes |
| TCJA | Federal tax reform legislation enacted on December 22, 2017, commonly referred to as the Tax Cuts and Jobs Act |
| TCOS | Transmission Cost of Service |
| TECA | Texas Electric Choice Act |
| TEP | Transportation Electrification Program |
| TNMP | Texas-New Mexico Power Company and Subsidiaries |
| TNMP 2018 Rate Case | TNMP's General Rate Case Application filed on May 30, 2018 |
| TNMP 2024 Bonds | TNMP's First Mortgage Bonds issued under the TNMP 2024 Bond Purchase Agreement |
| TNMP 2024 Bond Purchase Agreement | TNMP's Agreement for the sale of an aggregate $285.0 million of TNMP's 2024 Bonds |
| TNMP February 2025 Bonds | TNMP's First Mortgage Bonds issued under the TNMP February 2025 Bond Purchase Agreement |
| TNMP February 2025 Bond Purchase Agreement | TNMP's Agreement for the sale of an aggregate $140.0 Million of TNMP February 2025 Bonds |
| TNMP Revolving Credit Facility | TNMP's $200.0 million Secured Revolving Credit Facility |
| TSA(s) | Transmission Service Agreement(s) |
| TXNM | TXNM Energy, Inc. formerly known as PNM Resources, Inc. ("PNMR") |
| TXNM 2021 Delayed-Draw Term Loan | TXNM's $1.0 billion Unsecured Delayed-Draw Term Loan that matures on May 18, 2025 |
| TXNM 2023 Term Loan | TXNM's $500.0 million term loan that matures on June 30, 2026 |
| TXNM 2024 ATM Program | TXNM's distribution agreement pursuant to which the Company issued and sold an aggregate sales price of $300.0 million of its common stock, no par value, through the sales agents |
| TXNM Revolving Credit Facility | TXNM's $300.0 million Unsecured Revolving Credit Facility |

Table of Contents

| | |
|---|---|
| U.S. | The Unites States of America |
| U.S. Supreme Court | United States Supreme Court |
| Valencia | Valencia Energy Facility |
| VIE | Variable Interest Entity |
| WACC | Weighted Average Cost of Capital |
| Western Spirit Line | An approximately 150-mile 345-kV transmission line |
| Westmoreland | Westmoreland Coal Company |
| WFB LOC Facility | Letter of credit arrangements with Wells Fargo Bank, N.A., entered into in August 2020 |
| WRAP | Western Resource Adequacy Program |
| WSJ LLC | Westmoreland San Juan, LLC, a subsidiary of Westmoreland Mining Holdings, LLC, and current owner of San Juan Coal Company |

Table of Contents

**PART I. FINANCIAL INFORMATION**

**ITEM 1. FINANCIAL STATEMENTS**

**TXNM ENERGY, INC. AND SUBSIDIARIES**
**CONDENSED CONSOLIDATED STATEMENTS OF EARNINGS**
(Unaudited)

| | Three Months Ended June 30, | | Six Months Ended June 30, | |
|---|---|---|---|---|
| | 2025 | 2024 | 2025 | 2024 |
| | (In thousands, except per share amounts) | | | |
| **Electric Operating Revenues** | $ 502,420 | $ 488,102 | $ 985,212 | $ 924,979 |
| **Operating Expenses:** | | | | |
| Cost of energy | 167,622 | 154,706 | 336,804 | 287,010 |
| Administrative and general | 75,991 | 59,581 | 136,760 | 115,008 |
| Energy production costs | 26,081 | 24,584 | 50,627 | 46,796 |
| Regulatory disallowances | — | — | — | 4,459 |
| Depreciation and amortization | 105,235 | 94,413 | 209,786 | 187,600 |
| Transmission and distribution costs | 26,461 | 25,051 | 51,966 | 47,815 |
| Taxes other than income taxes | 28,329 | 24,084 | 54,679 | 50,018 |
| Total operating expenses | 429,719 | 382,419 | 840,622 | 738,706 |
| Operating income | 72,701 | 105,683 | 144,590 | 186,273 |
| **Other Income and Deductions:** | | | | |
| Interest income | 3,872 | 4,470 | 8,119 | 9,050 |
| Gains on investment securities | 23,556 | 558 | 22,315 | 18,556 |
| Other income | 5,704 | 7,688 | 10,433 | 12,599 |
| Other (deductions) | (6,481) | (1,636) | (8,739) | (18,158) |
| Net other income and deductions | 26,651 | 11,080 | 32,128 | 22,047 |
| **Interest Charges** | 72,013 | 55,828 | 135,564 | 109,590 |
| **Earnings before Income Taxes** | 27,339 | 60,935 | 41,154 | 98,730 |
| **Income Taxes (Benefits)** | 1,326 | 8,971 | 2,344 | (3,600) |
| **Net Earnings** | 26,013 | 51,964 | 38,810 | 102,330 |
| **(Earnings) Attributable to Valencia Non-controlling Interest** | (4,305) | (3,783) | (8,047) | (6,827) |
| **Preferred Stock Dividend Requirements of Subsidiary** | (132) | (132) | (264) | (264) |
| **Net Earnings Attributable to TXNM** | $ 21,576 | $ 48,049 | $ 30,499 | $ 95,239 |
| **Net Earnings Attributable to TXNM per Common Share:** | | | | |
| Basic | $ 0.22 | $ 0.53 | $ 0.32 | $ 1.05 |
| Diluted | $ 0.22 | $ 0.53 | $ 0.32 | $ 1.05 |
| **Dividends Declared per Common Share** | $ 0.4075 | $ 0.3875 | $ 0.8150 | $ 0.7750 |

The accompanying notes, as they relate to TXNM, are an integral part of these condensed consolidated financial statements.

Table of Contents

**TXNM ENERGY, INC. AND SUBSIDIARIES**
**CONDENSED CONSOLIDATED STATEMENTS OF COMPREHENSIVE INCOME**
(Unaudited)

| | Three Months Ended June 30, | | Six Months Ended June 30, | |
|---|---|---|---|---|
| | 2025 | 2024 | 2025 | 2024 |
| | (In thousands) | | | |
| **Net Earnings** | $ 26,013 | $ 51,964 | $ 38,810 | $ 102,330 |
| **Other Comprehensive Income:** | | | | |
| **Unrealized Gains on Available-for-Sale Debt Securities**: | | | | |
| Net increase (decrease) in unrealized holding gains arising during the period, net of income tax (expense) benefit of $(60), $274, $(128), and $149 | 177 | (804) | 376 | (438) |
| Reclassification adjustment for (gains) included in net earnings, net of income tax expense of $51, $421, $86, and $3,192 | (150) | (1,235) | (252) | (9,374) |
| **Pension Liability Adjustment:** | | | | |
| Reclassification adjustment for amortization of experience losses recognized as net periodic benefit cost, net of income tax (benefit) of $(349), $(309), $(698), and $(618) | 1,026 | 908 | 2,051 | 1,815 |
| **Fair Value Adjustment for Cash Flow Hedges:** | | | | |
| Change in fair market value, net of income tax (expense) of $633, $1,111, $633, and $1,094 | (1,860) | (3,263) | (1,860) | (3,213) |
| Reclassification adjustment for gains included in net earnings, net of income tax (expense) benefit of $0, $(716), $0, and $(1,413) | — | 2,102 | — | 4,150 |
| **Total Other Comprehensive Income (Loss)** | (807) | (2,292) | 315 | (7,060) |
| **Comprehensive Income** | 25,206 | 49,672 | 39,125 | 95,270 |
| **Comprehensive (Income) Attributable to Valencia Non-controlling Interest** | (4,305) | (3,783) | (8,047) | (6,827) |
| **Preferred Stock Dividend Requirements of Subsidiary** | (132) | (132) | (264) | (264) |
| **Comprehensive Income Attributable to TXNM** | $ 20,769 | $ 45,757 | $ 30,814 | $ 88,179 |

The accompanying notes, as they relate to TXNM, are an integral part of these condensed consolidated financial statements.

Table of Contents

**TXNM ENERGY, INC. AND SUBSIDIARIES**
**CONDENSED CONSOLIDATED STATEMENTS OF CASH FLOWS**
(Unaudited)

| | Six Months Ended June 30, | |
|---|---|---|
| | **2025** | **2024** |
| | (In thousands) | |
| **Cash Flows From Operating Activities:** | | |
| Net earnings | $ 38,810 | $ 102,330 |
| Adjustments to reconcile net earnings to net cash flows from operating activities: | | |
| Depreciation and amortization | 235,245 | 206,365 |
| Deferred income tax expense | 1,796 | 15,385 |
| (Gain) on sale of NMRD | — | (4,449) |
| (Gains) losses on investment securities | (22,315) | (18,556) |
| Stock based compensation expense | 5,266 | 6,676 |
| Regulatory disallowances | — | 4,459 |
| Allowance for equity funds used during construction | (5,266) | (8,130) |
| Other, net | 1,753 | 2,039 |
| Changes in certain assets and liabilities: | | |
| Accounts receivable and unbilled revenues | (30,921) | (10,120) |
| Materials, supplies, and fuel stock | (4,313) | (17,110) |
| Other current assets | (20,651) | (19,479) |
| Other assets | (8,211) | (16,382) |
| Accounts payable | (3,669) | (17,502) |
| Accrued interest and taxes | (19,588) | (6,935) |
| Other current liabilities | (17,140) | (28,350) |
| Other liabilities | (6,001) | (20,717) |
| Net cash flows from operating activities | 144,795 | 169,524 |
| | | |
| **Cash Flows From Investing Activities:** | | |
| Additions to utility plant and non-utility plant | (608,800) | (581,818) |
| Proceeds from sale of plant assets | — | 2,840 |
| Proceeds from sales of investment securities | 198,728 | 412,750 |
| Purchases of investment securities | (201,174) | (417,599) |
| Proceeds from sale of NMRD | — | 116,936 |
| Investments in NMRD | — | (12,550) |
| Other, net | (53) | (57) |
| Net cash flows used in investing activities | (611,299) | (479,498) |

The accompanying notes, as they relate to TXNM, are an integral part of these condensed consolidated financial statements.

Table of Contents

**TXNM ENERGY, INC. AND SUBSIDIARIES**
**CONDENSED CONSOLIDATED STATEMENTS OF CASH FLOWS**
(Unaudited)

| | Six Months Ended June 30, | |
|---|---|---|
| | **2025** | **2024** |
| | (In thousands) | |
| **Cash Flows From Financing Activities:** | | |
| Revolving credit facilities borrowings | $ 1,398,900 | $ 1,584,300 |
| Revolving credit facilities repayments | (1,662,500) | (1,519,800) |
| Long-term borrowings | 1,719,300 | 1,065,000 |
| Repayment of long-term debt | (1,442,706) | (737,000) |
| Issuance of common stock | 645,309 | — |
| Awards of common stock | (8,249) | (6,248) |
| Dividends paid | (75,781) | (70,169) |
| Valencia's transactions with its owner | (8,918) | (7,853) |
| Transmission interconnection and security deposit arrangements | 21,215 | 64,752 |
| Refunds paid under transmission interconnection and security deposit arrangements | (95,028) | (28,702) |
| Debt issuance costs and other, net | (9,599) | (17,929) |
| Net cash flows from financing activities | 481,943 | 326,351 |
| | | |
| **Change in Cash, Cash Equivalents, and Restricted Cash** | 15,439 | 16,377 |
| **Cash, Cash Equivalents, and Restricted Cash at Beginning of Period** | 22,085 | 3,943 |
| **Cash, Cash Equivalents, and Restricted Cash at End of Period** | $ 37,524 | $ 20,320 |
| | | |
| **Restricted Cash included in Other Current Assets and Other Deferred Charges on Condensed Consolidated Balance Sheets:** | | |
| At beginning of period | $ 17,587 | $ 1,728 |
| At end of period | $ 15,354 | $ 17,085 |
| | | |
| **Supplemental Cash Flow Disclosures:** | | |
| Interest paid, net of amounts capitalized | $ 132,849 | $ 97,747 |
| Income taxes paid (refunded), net | $ 2,350 | $ (395) |
| | | |
| **Supplemental schedule of noncash investing activities:** | | |
| Decrease in accrued plant additions | $ 53,154 | $ 47,369 |

The accompanying notes, as they relate to TXNM, are an integral part of these condensed consolidated financial statements.

Table of Contents

**TXNM ENERGY, INC. AND SUBSIDIARIES**
**CONDENSED CONSOLIDATED BALANCE SHEETS**
(Unaudited)

| | June 30, 2025 | December 31, 2024 |
|---|---|---|
| | (In thousands) | |
| **ASSETS** | | |
| **Current Assets:** | | |
| Cash and cash equivalents | $ 22,170 | $ 4,498 |
| Accounts receivable, net of allowance for credit losses of $1,319 and $1,398 | 146,444 | 130,351 |
| Unbilled revenues | 81,989 | 69,176 |
| Other receivables | 46,981 | 37,236 |
| Materials, supplies, and fuel stock | 171,174 | 166,861 |
| Regulatory assets | 41,891 | 41,492 |
| Prepaid assets | 39,869 | 25,452 |
| Income taxes receivable | 9,486 | 7,684 |
| Other current assets | 13,723 | 16,086 |
| Total current assets | 573,727 | 498,836 |
| **Other Property and Investments:** | | |
| Investment securities | 487,033 | 475,524 |
| Other investments | 246 | 259 |
| Non-utility property, net | 32,218 | 28,832 |
| Total other property and investments | 519,497 | 504,615 |
| **Utility Plant:** | | |
| Plant in service and plant held for future use | 10,965,483 | 10,697,774 |
| Less accumulated depreciation and amortization | 2,904,763 | 2,829,296 |
| | 8,060,720 | 7,868,478 |
| Construction work in progress | 677,897 | 495,976 |
| Nuclear fuel, net of accumulated amortization of $32,051 and $28,245 | 76,887 | 72,554 |
| Net utility plant | 8,815,504 | 8,437,008 |
| **Deferred Charges and Other Assets:** | | |
| Regulatory assets | 953,795 | 962,003 |
| Goodwill | 278,297 | 278,297 |
| Operating lease right-of-use assets, net of accumulated amortization | 265,919 | 272,894 |
| Other deferred charges | 268,525 | 258,080 |
| Total deferred charges and other assets | 1,766,536 | 1,771,274 |
| | $ 11,675,264 | $ 11,211,733 |

The accompanying notes, as they relate to TXNM, are an integral part of these condensed consolidated financial statements.

Table of Contents

**TXNM ENERGY, INC. AND SUBSIDIARIES**
**CONDENSED CONSOLIDATED BALANCE SHEETS**
(Unaudited)

| | June 30, 2025 | December 31, 2024 |
|---|---|---|
| | (In thousands, except share information) | |
| **LIABILITIES AND STOCKHOLDERS' EQUITY** | | |
| **Current Liabilities:** | | |
| Short-term debt | $ 345,700 | $ 609,300 |
| Current installments of long-term debt (includes $7,102 and $6,907 related to ETBC I) | 416,701 | 611,603 |
| Accounts payable | 147,646 | 204,468 |
| Customer deposits | 6,509 | 6,533 |
| Accrued interest and taxes | 86,970 | 104,756 |
| Regulatory liabilities | 21,787 | 34,173 |
| Operating lease liabilities | 13,640 | 14,293 |
| Dividends declared | 132 | 36,889 |
| Transmission interconnection arrangement liabilities | — | 68,085 |
| Other current liabilities | 81,313 | 84,998 |
| Total current liabilities | 1,120,398 | 1,775,098 |
| **Long-term Debt, net of Unamortized Premiums, Discounts, and Debt Issuance Costs (includes $328,179 and $331,726 related to ETBC I)** | 4,782,536 | 4,311,765 |
| **Deferred Credits and Other Liabilities:** | | |
| Accumulated deferred income taxes | 918,217 | 899,392 |
| Regulatory liabilities | 751,467 | 748,738 |
| Asset retirement obligations | 246,647 | 244,618 |
| Accrued pension liability and postretirement benefit cost | 18,211 | 23,065 |
| Operating lease liabilities | 245,847 | 255,376 |
| Other deferred credits | 363,618 | 358,867 |
| Total deferred credits and other liabilities | 2,544,007 | 2,530,056 |
| Total liabilities | 8,446,941 | 8,616,919 |
| **Commitments and Contingencies (Note 11)** | | |
| **Cumulative Preferred Stock of Subsidiary** | | |
| without mandatory redemption requirements ($100 stated value; 10,000,000 shares authorized; issued and outstanding 115,293 shares) | 11,529 | 11,529 |
| **Equity:** | | |
| TXNM common stockholders' equity: | | |
| Common stock (no par value; 200,000,000 shares authorized; issued and outstanding 105,378,979 and 92,659,335 shares) | 2,366,770 | 1,724,444 |
| Accumulated other comprehensive income (loss), net of income taxes | (75,393) | (75,708) |
| Retained earnings | 879,388 | 887,649 |
| Total TXNM common stockholders' equity | 3,170,765 | 2,536,385 |
| Non-controlling interest in Valencia | 46,029 | 46,900 |
| Total equity | 3,216,794 | 2,583,285 |
| | $ 11,675,264 | $ 11,211,733 |

The accompanying notes, as they relate to TXNM, are an integral part of these condensed consolidated financial statements.

Table of Contents

**TXNM ENERGY, INC. AND SUBSIDIARIES**
**CONDENSED CONSOLIDATED STATEMENTS OF CHANGES IN EQUITY**
(Unaudited)

| | Attributable to TXNM | | | | | |
|---|---|---|---|---|---|---|
| | Common Stock | AOCI | Retained Earnings | Total TXNM Common Stockholders' Equity | Non-controlling Interest in Valencia | Total Equity |
| | (In thousands) | | | | | |
| **Balance at March 31, 2025** | $ 1,721,109 | $ (74,586) | $ 857,812 | $ 2,504,335 | $ 46,372 | $ 2,550,707 |
| Net earnings before subsidiary preferred stock dividends | — | — | 21,708 | 21,708 | 4,305 | 26,013 |
| Total other comprehensive income (loss) | — | (807) | — | (807) | — | (807) |
| Subsidiary preferred stock dividends | — | — | (132) | (132) | — | (132) |
| Awards of common stock | (1,942) | — | — | (1,942) | — | (1,942) |
| Issuance of common stock | 645,309 | — | — | 645,309 | — | 645,309 |
| Stock based compensation expense | 2,294 | — | — | 2,294 | — | 2,294 |
| Valencia's transactions with its owner | — | — | — | — | (4,648) | (4,648) |
| **Balance at June 30, 2025** | $ 2,366,770 | $ (75,393) | $ 879,388 | $ 3,170,765 | $ 46,029 | $ 3,216,794 |
| | | | | | | |
| **Balance at December 31, 2024** | $ 1,724,444 | $ (75,708) | $ 887,649 | $ 2,536,385 | $ 46,900 | $ 2,583,285 |
| Net earnings before subsidiary preferred stock dividends | — | — | 30,763 | 30,763 | 8,047 | 38,810 |
| Total other comprehensive income | — | 315 | — | 315 | — | 315 |
| Subsidiary preferred stock dividends | — | — | (264) | (264) | — | (264) |
| Dividends declared on common stock | — | — | (38,760) | (38,760) | — | (38,760) |
| Awards of common stock | (8,249) | — | — | (8,249) | — | (8,249) |
| Issuance of common stock | 645,309 | — | — | 645,309 | — | 645,309 |
| Stock based compensation expense | 5,266 | — | — | 5,266 | — | 5,266 |
| Valencia's transactions with its owner | — | — | — | — | (8,918) | (8,918) |
| **Balance at June 30, 2025** | $ 2,366,770 | $ (75,393) | $ 879,388 | $ 3,170,765 | $ 46,029 | $ 3,216,794 |
| | | | | | | |
| **Balance at March 31, 2024** | $ 1,623,991 | $ (67,608) | $ 799,348 | $ 2,355,731 | $ 48,999 | $ 2,404,730 |
| Net earnings before subsidiary preferred stock dividends | — | — | 48,181 | 48,181 | 3,783 | 51,964 |
| Total other comprehensive income (loss) | — | (2,292) | — | (2,292) | — | (2,292) |
| Subsidiary preferred stock dividends | — | — | (132) | (132) | — | (132) |
| Awards of common stock | (808) | — | — | (808) | — | (808) |
| Stock based compensation expense | 2,068 | — | — | 2,068 | — | 2,068 |
| Valencia's transactions with its owner | — | — | — | — | (3,850) | (3,850) |
| **Balance at June 30, 2024** | $ 1,625,251 | $ (69,900) | $ 847,397 | $ 2,402,748 | $ 48,932 | $ 2,451,680 |
| | | | | | | |
| **Balance at December 31, 2023** | $ 1,624,823 | $ (62,840) | $ 787,110 | $ 2,349,093 | $ 49,958 | $ 2,399,051 |
| Net earnings before subsidiary preferred stock dividends | — | — | 95,503 | 95,503 | 6,827 | 102,330 |
| Total other comprehensive income (loss) | — | (7,060) | — | (7,060) | — | (7,060) |
| Subsidiary preferred stock dividends | — | — | (264) | (264) | — | (264) |
| Dividends declared on common stock | — | — | (34,952) | (34,952) | — | (34,952) |
| Awards of common stock | (6,248) | — | — | (6,248) | — | (6,248) |
| Stock based compensation expense | 6,676 | — | — | 6,676 | — | 6,676 |
| Valencia's transactions with its owner | — | — | — | — | (7,853) | (7,853) |
| **Balance at June 30, 2024** | $ 1,625,251 | $ (69,900) | $ 847,397 | $ 2,402,748 | $ 48,932 | $ 2,451,680 |

The accompanying notes, as they relate to TXNM, are an integral part of these condensed consolidated financial statements.

Table of Contents

**PUBLIC SERVICE COMPANY OF NEW MEXICO AND SUBSIDIARIES**
**A WHOLLY-OWNED SUBSIDIARY OF TXNM ENERGY, INC.**
**CONDENSED CONSOLIDATED STATEMENTS OF EARNINGS**
(Unaudited)

| | Three Months Ended June 30, | | Six Months Ended June 30, | |
|---|---|---|---|---|
| | 2025 | 2024 | 2025 | 2024 |
| | (In thousands) | | | |
| **Electric Operating Revenues** | $ 338,372 | $ 333,671 | $ 671,752 | $ 641,786 |
| **Operating Expenses:** | | | | |
| Cost of energy | 124,336 | 114,772 | 255,290 | 212,184 |
| Administrative and general | 59,526 | 54,876 | 117,136 | 106,612 |
| Energy production costs | 26,081 | 24,584 | 50,627 | 46,796 |
| Regulatory disallowances | — | — | — | 4,459 |
| Depreciation and amortization | 60,778 | 54,230 | 120,581 | 107,517 |
| Transmission and distribution costs | 15,750 | 15,350 | 31,576 | 29,700 |
| Taxes other than income taxes | 15,262 | 11,768 | 28,565 | 25,477 |
| Total operating expenses | 301,733 | 275,580 | 603,775 | 532,745 |
| Operating income | 36,639 | 58,091 | 67,977 | 109,041 |
| **Other Income and Deductions:** | | | | |
| Interest income | 3,729 | 4,443 | 7,946 | 8,970 |
| Gains on investment securities | 23,556 | 558 | 22,315 | 18,556 |
| Other income | 3,561 | 4,224 | 5,363 | 7,642 |
| Other (deductions) | (4,301) | (913) | (5,819) | (1,783) |
| Net other income and deductions | 26,545 | 8,312 | 29,805 | 33,385 |
| **Interest Charges** | 31,975 | 25,880 | 61,791 | 50,996 |
| **Earnings before Income Taxes** | 31,209 | 40,523 | 35,991 | 91,430 |
| **Income Taxes** | 2,410 | 5,821 | 2,373 | 11,632 |
| **Net Earnings** | 28,799 | 34,702 | 33,618 | 79,798 |
| **(Earnings) Attributable to Valencia Non-controlling Interest** | (4,305) | (3,783) | (8,047) | (6,827) |
| **Net Earnings Attributable to PNM** | 24,494 | 30,919 | 25,571 | 72,971 |
| **Preferred Stock Dividend Requirements** | (132) | (132) | (264) | (264) |
| **Net Earnings Available for PNM Common Stock** | $ 24,362 | $ 30,787 | $ 25,307 | $ 72,707 |

The accompanying notes, as they relate to PNM, are an integral part of these condensed consolidated financial statements.

Table of Contents

**PUBLIC SERVICE COMPANY OF NEW MEXICO AND SUBSIDIARIES**
**A WHOLLY-OWNED SUBSIDIARY OF TXNM ENERGY, INC.**
**CONDENSED CONSOLIDATED STATEMENTS OF COMPREHENSIVE INCOME**
(Unaudited)

| | Three Months Ended June 30, | | Six Months Ended June 30, | |
|---|---|---|---|---|
| | **2025** | **2024** | **2025** | **2024** |
| | (In thousands) | | | |
| **Net Earnings** | $ 28,799 | $ 34,702 | $ 33,618 | $ 79,798 |
| **Other Comprehensive Income:** | | | | |
| **Unrealized Gains on Available-for-Sale Debt Securities**: | | | | |
| Net increase (decrease) in unrealized holding gains arising during the period, net of income tax (expense) benefit of $(60), $274, $(128), and $149 | 177 | (804) | 376 | (438) |
| Reclassification adjustment for (gains) included in net earnings, net of income tax expense of $51, $421, $86, and $3,192 | (150) | (1,235) | (252) | (9,374) |
| **Pension Liability Adjustment:** | | | | |
| Reclassification adjustment for amortization of experience losses recognized as net periodic benefit cost, net of income tax (benefit) of $(349), $(309), $(698), and $(618) | 1,026 | 908 | 2,051 | 1,815 |
| **Total Other Comprehensive Income (Loss)** | 1,053 | (1,131) | 2,175 | (7,997) |
| **Comprehensive Income** | 29,852 | 33,571 | 35,793 | 71,801 |
| **Comprehensive (Income) Attributable to Valencia Non-controlling Interest** | (4,305) | (3,783) | (8,047) | (6,827) |
| **Comprehensive Income Attributable to PNM** | $ 25,547 | $ 29,788 | $ 27,746 | $ 64,974 |

The accompanying notes, as they relate to PNM, are an integral part of these condensed consolidated financial statements.

Table of Contents

**PUBLIC SERVICE COMPANY OF NEW MEXICO AND SUBSIDIARIES**
**A WHOLLY-OWNED SUBSIDIARY OF TXNM ENERGY, INC.**
**CONDENSED CONSOLIDATED STATEMENTS OF CASH FLOWS**
(Unaudited)

| | Six Months Ended June 30, | |
|---|---|---|
| | **2025** | **2024** |
| | (In thousands) | |
| **Cash Flows From Operating Activities:** | | |
| Net earnings | $ 33,618 | $ 79,798 |
| Adjustments to reconcile net earnings to net cash flows from operating activities: | | |
| Depreciation and amortization | 134,216 | 120,385 |
| Deferred income tax expense (benefit) | 2,439 | 12,049 |
| (Gains) losses on investment securities | (22,315) | (18,556) |
| Regulatory disallowances | — | 4,459 |
| Allowance for equity funds used during construction | (3,095) | (6,476) |
| Other, net | 1,900 | 1,935 |
| Changes in certain assets and liabilities: | | |
| Accounts receivable and unbilled revenues | (21,040) | (2,654) |
| Materials, supplies, and fuel stock | (375) | (10,671) |
| Other current assets | (10,205) | (28,462) |
| Other assets | 1,463 | (3,324) |
| Accounts payable | (14,257) | (12,753) |
| Accrued interest and taxes | 4,457 | 10,619 |
| Other current liabilities | 9,661 | (6,113) |
| Other liabilities | (15,943) | (22,576) |
| Net cash flows from operating activities | 100,524 | 117,660 |
| | | |
| **Cash Flows From Investing Activities:** | | |
| Utility plant additions | (272,669) | (311,475) |
| Proceeds from sale of plant assets | — | 2,840 |
| Proceeds from sales of investment securities | 198,728 | 412,750 |
| Purchases of investment securities | (201,174) | (417,599) |
| Other, net | (62) | (57) |
| Net cash flows used in investing activities | (275,177) | (313,541) |

The accompanying notes, as they relate to PNM, are an integral part of these condensed consolidated financial statements.

Table of Contents

**PUBLIC SERVICE COMPANY OF NEW MEXICO AND SUBSIDIARIES**
**A WHOLLY-OWNED SUBSIDIARY OF TXNM ENERGY, INC.**
**CONDENSED CONSOLIDATED STATEMENTS OF CASH FLOWS**
(Unaudited)

| | Six Months Ended June 30, | |
|---|---|---|
| | **2025** | **2024** |
| | (In thousands) | |
| **Cash Flows From Financing Activities:** | | |
| Revolving credit facilities borrowings | $ 627,700 | $ 737,900 |
| Revolving credit facilities repayments | (756,900) | (804,800) |
| Long-term borrowings | 495,000 | 398,000 |
| Repayment of long-term debt | (107,406) | (198,000) |
| Equity contribution from parent | — | 55,000 |
| Dividends paid | (264) | (264) |
| Valencia's transactions with its owner | (8,918) | (7,853) |
| Transmission interconnection and security deposit arrangements | 2,415 | 58,002 |
| Refunds paid under transmission interconnection and security deposit arrangements | (74,278) | (23,852) |
| Debt issuance costs and other, net | (2,654) | (3,734) |
| Net cash flows from financing activities | 174,695 | 210,399 |
| **Change in Cash, Cash Equivalents, and Restricted Cash** | 42 | 14,518 |
| **Cash, Cash Equivalents, and Restricted Cash at Beginning of Period** | 20,285 | 2,586 |
| **Cash, Cash Equivalents, and Restricted Cash at End of Period** | $ 20,327 | $ 17,104 |
| **Restricted Cash included in Other Current Assets and Other Deferred Charges on Condensed Consolidated Balance Sheets:** | | |
| At beginning of period | $ 17,587 | $ 1,728 |
| At end of period | $ 15,354 | $ 17,085 |
| **Supplemental Cash Flow Disclosures:** | | |
| Interest paid, net of amounts capitalized | $ 53,933 | $ 32,905 |
| Income taxes paid (refunded), net | $ — | $ (1,707) |
| **Supplemental schedule of noncash investing activities:** | | |
| Decrease in accrued plant additions | $ 11,569 | $ 26,848 |

The accompanying notes, as they relate to PNM, are an integral part of these condensed consolidated financial statements.

Table of Contents

**PUBLIC SERVICE COMPANY OF NEW MEXICO AND SUBSIDIARIES**
**A WHOLLY-OWNED SUBSIDIARY OF TXNM ENERGY, INC.**
**CONDENSED CONSOLIDATED BALANCE SHEETS**
(Unaudited)

| | June 30, 2025 | December 31, 2024 |
|---|---|---|
| | (In thousands) | |
| **ASSETS** | | |
| **Current Assets:** | | |
| Cash and cash equivalents | $ 4,973 | $ 2,698 |
| Accounts receivable, net of allowance for credit losses of $1,319 and $1,398 | 106,747 | 95,932 |
| Unbilled revenues | 61,194 | 52,983 |
| Other receivables | 30,847 | 24,174 |
| Affiliate receivables | 8,883 | 9,241 |
| Materials, supplies, and fuel stock | 142,884 | 142,510 |
| Regulatory assets | 32,920 | 36,224 |
| Prepaid assets | 25,200 | 14,746 |
| Income taxes receivable | 16,376 | 16,309 |
| Other current assets | 13,711 | 16,091 |
| Total current assets | 443,735 | 410,908 |
| **Other Property and Investments:** | | |
| Investment securities | 487,033 | 475,524 |
| Other investments | 246 | 184 |
| Non-utility property, net | 13,998 | 13,647 |
| Total other property and investments | 501,277 | 489,355 |
| **Utility Plant:** | | |
| Plant in service and plant held for future use | 6,929,296 | 6,797,493 |
| Less accumulated depreciation and amortization | 2,131,450 | 2,079,363 |
| | 4,797,846 | 4,718,130 |
| Construction work in progress | 392,455 | 328,403 |
| Nuclear fuel, net of accumulated amortization of $32,051 and $28,245 | 76,887 | 72,554 |
| Net utility plant | 5,267,188 | 5,119,087 |
| **Deferred Charges and Other Assets:** | | |
| Regulatory assets | 845,630 | 857,310 |
| Goodwill | 51,632 | 51,632 |
| Operating lease right-of-use assets, net of accumulated amortization | 265,016 | 271,433 |
| Other deferred charges | 218,962 | 207,554 |
| Total deferred charges and other assets | 1,381,240 | 1,387,929 |
| | $ 7,593,440 | $ 7,407,279 |

The accompanying notes, as they relate to PNM, are an integral part of these condensed consolidated financial statements.

Table of Contents

**PUBLIC SERVICE COMPANY OF NEW MEXICO AND SUBSIDIARIES**
**A WHOLLY-OWNED SUBSIDIARY OF TXNM ENERGY, INC.**
**CONDENSED CONSOLIDATED BALANCE SHEETS**
(Unaudited)

| | June 30, 2025 | December 31, 2024 |
|---|---|---|
| | (In thousands, except share information) | |
| **LIABILITIES AND STOCKHOLDER'S EQUITY** | | |
| **Current Liabilities:** | | |
| Short-term debt | $ 234,600 | $ 363,800 |
| Current installments of long-term debt (includes $7,102 and $6,907 related to ETBC I) | 206,995 | 560,637 |
| Accounts payable | 98,057 | 123,883 |
| Affiliate payables | 31,593 | 15,695 |
| Customer deposits | 6,509 | 6,533 |
| Accrued interest and taxes | 51,447 | 46,923 |
| Regulatory liabilities | 21,787 | 33,571 |
| Operating lease liabilities | 13,253 | 13,542 |
| Dividends declared | 132 | 132 |
| Transmission interconnection arrangement liabilities | — | 68,085 |
| Other current liabilities | 54,832 | 50,099 |
| Total current liabilities | 719,205 | 1,282,900 |
| **Long-term Debt, net of Unamortized Premiums, Discounts, and Debt Issuance Costs (includes $328,179 and $331,726 related to ETBC I)** | 2,639,407 | 1,898,955 |
| **Deferred Credits and Other Liabilities:** | | |
| Accumulated deferred income taxes | 775,235 | 756,218 |
| Regulatory liabilities | 502,243 | 518,701 |
| Asset retirement obligations | 245,652 | 243,663 |
| Accrued pension liability and postretirement benefit cost | 17,607 | 22,067 |
| Operating lease liabilities | 245,330 | 254,702 |
| Other deferred credits | 226,423 | 234,346 |
| Total deferred credits and liabilities | 2,012,490 | 2,029,697 |
| Total liabilities | 5,371,102 | 5,211,552 |
| **Commitments and Contingencies (Note 11)** | | |
| **Cumulative Preferred Stock** | | |
| without mandatory redemption requirements ($100 stated value; 10,000,000 shares authorized; issued and outstanding 115,293 shares) | 11,529 | 11,529 |
| **Equity:** | | |
| PNM common stockholder's equity: | | |
| Common stock (no par value; 40,000,000 shares authorized; issued and outstanding 39,117,799 shares) | 1,602,918 | 1,602,918 |
| Accumulated other comprehensive income (loss), net of income taxes | (73,533) | (75,708) |
| Retained earnings | 635,395 | 610,088 |
| Total PNM common stockholder's equity | 2,164,780 | 2,137,298 |
| Non-controlling interest in Valencia | 46,029 | 46,900 |
| Total equity | 2,210,809 | 2,184,198 |
| | $ 7,593,440 | $ 7,407,279 |

The accompanying notes, as they relate to PNM, are an integral part of these condensed consolidated financial statements.

Table of Contents

**PUBLIC SERVICE COMPANY OF NEW MEXICO AND SUBSIDIARIES**
**A WHOLLY-OWNED SUBSIDIARY OF TXNM ENERGY, INC.**
**CONDENSED CONSOLIDATED STATEMENTS OF CHANGES IN EQUITY**
(Unaudited)

| | Attributable to PNM | | | | | |
|---|---|---|---|---|---|---|
| | Common Stock | AOCI | Retained Earnings | Total PNM Common Stockholder's Equity | Non-controlling Interest in Valencia | Total Equity |
| | (In thousands) | | | | | |
| **Balance at March 31, 2025** | $ 1,602,918 | $ (74,586) | $ 611,033 | $ 2,139,365 | $ 46,372 | $ 2,185,737 |
| Net earnings | — | — | 24,494 | 24,494 | 4,305 | 28,799 |
| Total other comprehensive income | — | 1,053 | — | 1,053 | — | 1,053 |
| Dividends declared on preferred stock | — | — | (132) | (132) | — | (132) |
| Valencia's transactions with its owner | — | — | — | — | (4,648) | (4,648) |
| **Balance at June 30, 2025** | $ 1,602,918 | $ (73,533) | $ 635,395 | $ 2,164,780 | $ 46,029 | $ 2,210,809 |
| | | | | | | |
| **Balance at December 31, 2024** | $ 1,602,918 | $ (75,708) | $ 610,088 | $ 2,137,298 | $ 46,900 | $ 2,184,198 |
| Net earnings | — | — | 25,571 | 25,571 | 8,047 | 33,618 |
| Total other comprehensive income | — | 2,175 | — | 2,175 | — | 2,175 |
| Dividends declared on preferred stock | — | — | (264) | (264) | — | (264) |
| Valencia's transactions with its owner | — | — | — | — | (8,918) | (8,918) |
| **Balance at June 30, 2025** | $ 1,602,918 | $ (73,533) | $ 635,395 | $ 2,164,780 | $ 46,029 | $ 2,210,809 |
| | | | | | | |
| **Balance at March 31, 2024** | $ 1,547,918 | $ (73,371) | $ 511,324 | $ 1,985,871 | $ 48,999 | $ 2,034,870 |
| Net earnings | — | — | 30,919 | 30,919 | 3,783 | 34,702 |
| Total other comprehensive income (loss) | — | (1,131) | — | (1,131) | — | (1,131) |
| Dividends declared on preferred stock | — | — | (132) | (132) | — | (132) |
| Equity contributions from parent | 55,000 | — | — | 55,000 | — | 55,000 |
| Valencia's transactions with its owner | — | — | — | — | (3,850) | (3,850) |
| **Balance at June 30, 2024** | $ 1,602,918 | $ (74,502) | $ 542,111 | $ 2,070,527 | $ 48,932 | $ 2,119,459 |
| | | | | | | |
| **Balance at December 31, 2023** | $ 1,547,918 | $ (66,505) | $ 469,404 | $ 1,950,817 | $ 49,958 | $ 2,000,775 |
| Net earnings | — | — | 72,971 | 72,971 | 6,827 | 79,798 |
| Total other comprehensive income (loss) | — | (7,997) | — | (7,997) | — | (7,997) |
| Dividends declared on preferred stock | — | — | (264) | (264) | — | (264) |
| Equity contribution from parent | 55,000 | — | — | 55,000 | — | 55,000 |
| Valencia's transactions with its owner | — | — | — | — | (7,853) | (7,853) |
| **Balance at June 30, 2024** | $ 1,602,918 | $ (74,502) | $ 542,111 | $ 2,070,527 | $ 48,932 | $ 2,119,459 |

The accompanying notes, as they relate to PNM, are an integral part of these condensed consolidated financial statements.

Table of Contents

**TEXAS-NEW MEXICO POWER COMPANY AND SUBSIDIARIES**
**A WHOLLY-OWNED SUBSIDIARY OF TXNM ENERGY, INC.**
**CONDENSED CONSOLIDATED STATEMENTS OF EARNINGS**
(Unaudited)

| | Three Months Ended June 30, | | Six Months Ended June 30, | |
|---|---|---|---|---|
| | 2025 | 2024 | 2025 | 2024 |
| | (In thousands) | | | |
| **Electric Operating Revenues** | $ 164,048 | $ 154,431 | $ 313,460 | $ 283,193 |
| **Operating Expenses:** | | | | |
| Cost of energy | 43,286 | 39,934 | 81,514 | 74,826 |
| Administrative and general | 14,994 | 13,705 | 27,035 | 27,374 |
| Depreciation and amortization | 34,926 | 31,033 | 70,139 | 61,415 |
| Transmission and distribution costs | 10,711 | 9,701 | 20,390 | 18,115 |
| Taxes other than income taxes | 11,444 | 10,743 | 22,948 | 21,410 |
| Total operating expenses | 115,361 | 105,116 | 222,026 | 203,140 |
| Operating income | 48,687 | 49,315 | 91,434 | 80,053 |
| **Other Income and Deductions:** | | | | |
| Interest income | 159 | 127 | 313 | 296 |
| Other income | 1,764 | 2,982 | 4,284 | 4,155 |
| Other (deductions) | (229) | (277) | (497) | (574) |
| Net other income and deductions | 1,694 | 2,832 | 4,100 | 3,877 |
| **Interest Charges** | 23,942 | 14,451 | 41,264 | 27,787 |
| **Earnings before Income Taxes** | 26,439 | 37,696 | 54,270 | 56,143 |
| **Income Taxes** | 5,471 | 7,771 | 11,019 | 11,635 |
| **Net Earnings** | $ 20,968 | $ 29,925 | $ 43,251 | $ 44,508 |

The accompanying notes, as they relate to TNMP, are an integral part of these condensed consolidated financial statements.

Table of Contents

**TEXAS-NEW MEXICO POWER COMPANY AND SUBSIDIARIES**
**A WHOLLY-OWNED SUBSIDIARY OF TXNM ENERGY, INC.**
**CONDENSED CONSOLIDATED STATEMENTS OF CASH FLOWS**
(Unaudited)

| | Six Months Ended June 30, | |
|---|---|---|
| | **2025** | **2024** |
| | (In thousands) | |
| **Cash Flows From Operating Activities:** | | |
| Net earnings | $ 43,251 | $ 44,508 |
| Adjustments to reconcile net earnings to net cash flows from operating activities: | | |
| Depreciation and amortization | 75,899 | 61,963 |
| Deferred income tax expense | 10,464 | 10,322 |
| Allowance for equity funds used during construction and other, net | (2,319) | (1,653) |
| Changes in certain assets and liabilities: | | |
| Accounts receivable and unbilled revenues | (9,880) | (7,466) |
| Materials and supplies | (3,938) | (6,439) |
| Other current assets | (11,469) | 6,979 |
| Other assets | (4,716) | (4,251) |
| Accounts payable | 8,036 | (2,381) |
| Accrued interest and taxes | (23,947) | (8,246) |
| Other current liabilities | 13,888 | 179 |
| Other liabilities | 6,994 | (780) |
| Net cash flows from operating activities | 102,263 | 92,735 |
| **Cash Flows From Investing Activities:** | | |
| Utility plant additions | (317,739) | (253,537) |
| Net cash flows used in investing activities | (317,739) | (253,537) |
| **Cash Flows From Financing Activities:** | | |
| Revolving credit facilities borrowings | 264,600 | 338,900 |
| Revolving credit facilities repayments | (416,200) | (293,400) |
| Long-term borrowings | 1,224,300 | 117,000 |
| Repayment of long-term debt | (1,084,300) | — |
| Equity contribution from parent | 250,000 | — |
| Transmission interconnection and security deposit arrangements | 18,800 | 6,750 |
| Refunds paid under transmission interconnection and security deposit arrangements | (20,750) | (4,850) |
| Debt issuance costs and other, net | (5,207) | (2,324) |
| Net cash flows from financing activities | 231,243 | 162,076 |
| | | |
| **Change in Cash and Cash Equivalents** | 15,767 | 1,274 |
| **Cash and Cash Equivalents at Beginning of Period** | 233 | — |
| **Cash and Cash Equivalents at End of Period** | $ 16,000 | $ 1,274 |
| | | |
| **Supplemental Cash Flow Disclosures:** | | |
| Interest paid, net of amounts capitalized | $ 46,365 | $ 24,624 |
| Income taxes paid (refunded), net | $ 2,350 | $ 1,312 |
| | | |
| **Supplemental schedule of noncash investing activities:** | | |
| Decrease in accrued plant additions | $ 44,636 | $ 14,697 |

The accompanying notes, as they relate to TNMP, are an integral part of these condensed consolidated financial statements.

Table of Contents

**TEXAS-NEW MEXICO POWER COMPANY AND SUBSIDIARIES**
**A WHOLLY-OWNED SUBSIDIARY OF TXNM ENERGY, INC.**
**CONDENSED CONSOLIDATED BALANCE SHEETS**
(Unaudited)

| | June 30, 2025 | December 31, 2024 |
|---|---|---|
| | (In thousands) | |
| **ASSETS** | | |
| **Current Assets:** | | |
| Cash and cash equivalents | $ 16,000 | $ 233 |
| Accounts receivable | 39,697 | 34,419 |
| Unbilled revenues | 20,795 | 16,193 |
| Other receivables | 17,894 | 15,144 |
| Materials and supplies | 28,290 | 24,351 |
| Regulatory assets | 8,971 | 5,268 |
| Prepaid and other current assets | 10,226 | 4,908 |
| Total current assets | 141,873 | 100,516 |
| **Other Property and Investments:** | | |
| Other investments | — | 75 |
| Non-utility property, net | 16,146 | 13,137 |
| Total other property and investments | 16,146 | 13,212 |
| **Utility Plant:** | | |
| Plant in service and plant held for future use | 3,795,571 | 3,635,550 |
| Less accumulated depreciation and amortization | 651,123 | 616,741 |
| | 3,144,448 | 3,018,809 |
| Construction work in progress | 268,957 | 165,527 |
| Net utility plant | 3,413,405 | 3,184,336 |
| **Deferred Charges and Other Assets:** | | |
| Regulatory assets | 108,165 | 104,693 |
| Goodwill | 226,665 | 226,665 |
| Operating lease right-of-use assets, net of accumulated amortization | 388 | 923 |
| Other deferred charges | 16,700 | 18,780 |
| Total deferred charges and other assets | 351,918 | 351,061 |
| | $ 3,923,342 | $ 3,649,125 |

The accompanying notes, as they relate to TNMP, are an integral part of these condensed consolidated financial statements.

Table of Contents

**TEXAS-NEW MEXICO POWER COMPANY AND SUBSIDIARIES**
**A WHOLLY-OWNED SUBSIDIARY OF TXNM ENERGY, INC.**
**CONDENSED CONSOLIDATED BALANCE SHEETS**
(Unaudited)

| | June 30, 2025 | December 31, 2024 |
|---|---|---|
| | (In thousands, except share information) | |
| **LIABILITIES AND STOCKHOLDER'S EQUITY** | | |
| **Current Liabilities:** | | |
| Short-term debt | $ — | $ 151,600 |
| Accounts payable | 30,515 | 67,116 |
| Affiliate payables | 18,414 | 7,339 |
| Accrued interest and taxes | 32,793 | 56,740 |
| Regulatory liabilities | — | 602 |
| Operating lease liabilities | 348 | 713 |
| Other current liabilities | 9,535 | 6,964 |
| Total current liabilities | 91,605 | 291,074 |
| **Long-term Debt, net of Unamortized Premiums, Discounts, and Debt Issuance Costs** | 1,604,722 | 1,464,079 |
| **Deferred Credits and Other Liabilities:** | | |
| Accumulated deferred income taxes | 219,653 | 208,107 |
| Regulatory liabilities | 249,224 | 230,037 |
| Asset retirement obligations | 995 | 955 |
| Accrued pension liability and postretirement benefit cost | 604 | 998 |
| Operating lease liabilities | 31 | 167 |
| Other deferred credits | 98,068 | 88,519 |
| Total deferred credits and other liabilities | 568,575 | 528,783 |
| Total liabilities | 2,264,902 | 2,283,936 |
| **Commitments and Contingencies (Note 11)** | | |
| **Common Stockholder's Equity:** | | |
| Common stock ($10 par value; 12,000,000 shares authorized; issued and outstanding 6,358 shares) | 64 | 64 |
| Paid-in-capital | 1,120,066 | 870,066 |
| Retained earnings | 538,310 | 495,059 |
| Total common stockholder's equity | 1,658,440 | 1,365,189 |
| | $ 3,923,342 | $ 3,649,125 |

The accompanying notes, as they relate to TNMP, are an integral part of these condensed consolidated financial statements.

Table of Contents

**TEXAS-NEW MEXICO POWER COMPANY AND SUBSIDIARIES**
**A WHOLLY-OWNED SUBSIDIARY OF TXNM ENERGY, INC.**
**CONDENSED CONSOLIDATED STATEMENTS OF CHANGES IN COMMON STOCKHOLDER'S EQUITY**
(Unaudited)

| | Common Stock | Paid-in Capital | Retained Earnings | Total Common Stockholder's Equity |
|---|---|---|---|---|
| | | (In thousands) | | |
| **Balance at March 31, 2025** | $ 64 | $ 870,066 | $ 517,342 | $ 1,387,472 |
| Net earnings | — | — | 20,968 | 20,968 |
| Equity contribution from parent | — | 250,000 | — | 250,000 |
| **Balance at June 30, 2025** | $ 64 | $ 1,120,066 | $ 538,310 | $ 1,658,440 |
| | | | | |
| **Balance at December 31, 2024** | $ 64 | $ 870,066 | $ 495,059 | $ 1,365,189 |
| Net earnings | — | — | 43,251 | 43,251 |
| Equity contribution from parent | — | 250,000 | — | 250,000 |
| **Balance at June 30, 2025** | $ 64 | $ 1,120,066 | $ 538,310 | $ 1,658,440 |
| | | | | |
| **Balance at March 31, 2024** | $ 64 | $ 846,066 | $ 406,114 | $ 1,252,244 |
| Net earnings | — | — | 29,925 | 29,925 |
| **Balance at June 30, 2024** | $ 64 | $ 846,066 | $ 436,039 | $ 1,282,169 |
| | | | | |
| **Balance at December 31, 2023** | $ 64 | $ 846,066 | $ 391,531 | $ 1,237,661 |
| Net earnings | — | — | 44,508 | 44,508 |
| **Balance at June 30, 2024** | $ 64 | $ 846,066 | $ 436,039 | $ 1,282,169 |

The accompanying notes, as they relate to TNMP, are an integral part of these condensed consolidated financial statements.

Table of Contents

**TXNM ENERGY, INC. AND SUBSIDIARIES**
**PUBLIC SERVICE COMPANY OF NEW MEXICO AND SUBSIDIARIES**
**TEXAS-NEW MEXICO POWER COMPANY AND SUBSIDIARIES**

**NOTES TO CONDENSED CONSOLIDATED FINANCIAL STATEMENTS**
(Unaudited)

## (1) Significant Accounting Policies and Responsibility for Financial Statements

### Financial Statement Preparation

In the opinion of management, the accompanying unaudited interim Condensed Consolidated Financial Statements reflect all normal and recurring accruals and adjustments that are necessary to present fairly the consolidated financial position at June 30, 2025 and December 31, 2024, and the consolidated results of operations, comprehensive income, and cash flows for the six months ended June 30, 2025 and 2024. The preparation of financial statements in conformity with GAAP requires management to make estimates and assumptions that affect the reported amounts of assets and liabilities, disclosure of contingent assets and liabilities at the date of the financial statements, and the reported amounts of revenues and expenses during the reporting period. Actual results could ultimately differ from those estimated. Weather causes the Company's results of operations to be seasonal in nature and the results of operations presented in the accompanying Condensed Consolidated Financial Statements are not necessarily representative of operations for an entire year.

On August 2, 2024, PNM Resources, Inc. ("PNMR") amended its Articles of Incorporation to change its name to TXNM Energy, Inc. ("TXNM") and increase the number of authorized shares of the Company's common stock from 120,000,000 to 200,000,000. The Notes to Condensed Consolidated Financial Statements include disclosures for TXNM, PNM, and TNMP. This report uses the term "Company" when discussing matters of common applicability to TXNM, PNM, and TNMP. Discussions regarding only TXNM, PNM, or TNMP are so indicated.

On May 18, 2025, TXNM, Parent, and Merger Sub, entered into the Merger Agreement, pursuant to which Merger Sub will merge with and into TXNM, with TXNM surviving the Merger as a direct, wholly-owned subsidiary of Parent. Parent and Merger Sub are affiliates of Blackstone Infrastructure. See Note 17.

These Condensed Consolidated Financial Statements are unaudited. Certain information and note disclosures normally included in the annual audited Consolidated Financial Statements have been condensed or omitted, as permitted under the applicable rules and regulations. Readers of these financial statements should refer to TXNM's, PNM's, and TNMP's audited Consolidated Financial Statements and Notes thereto that are included in their respective 2024 Annual Reports on Form 10-K.

GAAP defines subsequent events as events or transactions that occur after the balance sheet date but before financial statements are issued or are available to be issued. Based on their nature, magnitude, and timing, certain subsequent events may be required to be reflected at the balance sheet date and/or required to be disclosed in the financial statements. The Company has evaluated subsequent events accordingly.

### Principles of Consolidation

The Condensed Consolidated Financial Statements of each of TXNM, PNM, and TNMP include their accounts and those of subsidiaries in which that entity owns a majority voting interest. PNM also consolidates Valencia and ETBC I. See Note 6. PNM owns undivided interests in several jointly-owned power plants and records its pro-rata share of the assets, liabilities, and expenses for those plants. The agreements for the jointly-owned plants provide that if an owner were to default on its payment obligations, the non-defaulting owners would be responsible for their proportionate share of the obligations of the defaulting owner. In exchange, the non-defaulting owners would be entitled to their proportionate share of the generating capacity of the defaulting owner. There have been no such payment defaults under any of the agreements for the jointly-owned plants.

PNMR Services Company expenses, which represent costs that are primarily driven by corporate level activities, are charged to the business segments. These services are billed at cost and are reflected as general and administrative expenses in the business segments. Other significant intercompany transactions between TXNM, PNM, and TNMP include interest and income tax sharing payments, as well as equity transactions. See Note 15. All intercompany transactions and balances have been eliminated.

### Equity Method Investment (Previously held)

As discussed in Note 21 of the Company's 2024 Annual Reports on Form 10-K, PNMR Development and AEP OnSite Partners created NMRD in September 2017 to pursue the acquisition, development, and ownership of renewable energy generation projects, primarily in the state of New Mexico. On February 27, 2024, PNMR Development and AEP OnSite Partners sold their respective interests in NMRD. PNMR Development received net proceeds of $117.0 million and recognized

Table of Contents

**TXNM ENERGY, INC. AND SUBSIDIARIES**
**PUBLIC SERVICE COMPANY OF NEW MEXICO AND SUBSIDIARIES**
**TEXAS-NEW MEXICO POWER COMPANY AND SUBSIDIARIES**

**NOTES TO CONDENSED CONSOLIDATED FINANCIAL STATEMENTS**
(Unaudited)

an after-tax gain of $4.4 million, which was presented as cash flows from operating activities on the Condensed Consolidated Statement of Cash Flows in the six months ended June 30, 2024. The recognition of deferred investment tax credits of $15.7 million was also recognized as an income tax benefit on the Condensed Consolidated Statement of Earnings. In the six months ended June 30, 2024, PNMR Development and AEP OnSite Partners each made cash contributions to NMRD of $12.6 million.

**Dividends on Common Stock**

Dividends on TXNM's common stock are declared by the Board. The timing of the declaration of dividends is dependent on the timing of meetings and other actions of the Board. The Board declared dividends on common stock attributable to the second quarter of 2025 of $0.4075 per share in July 2025 and declared dividends on common stock attributable to the second quarter of 2024 of $0.3875 per share in July 2024, which are reflected as Dividends Declared per Common Share on the TXNM Condensed Consolidated Statement of Earnings.

TXNM made $250.0 million in cash equity contributions to TNMP in the three and six months ended June 30, 2025. TXNM did not make any cash equity contributions to TNMP in the three and six months ended June 30, 2024. TXNM did not make any cash equity contributions to PNM in the three and six months ended June 30, 2025. TXNM made a $55.0 million cash equity contribution to PNM in the three and six months ended June 30, 2024. Neither PNM nor TNMP declared or paid any cash dividends on their common stock to TXNM in the three and six months ended June 30, 2025 and 2024.

**New Accounting Pronouncements**

Information concerning recently issued accounting pronouncements that have not yet been adopted by the Company is presented below. The Company does not expect difficulty in adopting these standards by their required effective dates.

*Accounting Standards Update 2023-09 - Income Taxes (Topic 740): Improvements to Income Tax Disclosures*

In December 2023, the FASB issued ASU 2023-09 enhancing the transparency and decision usefulness of income tax disclosures. Disclosure requirements of this update include (on an annual basis) the disclosure of specific categories in the rate reconciliation and the inclusion of additional information for reconciling items that meet a quantitative threshold (if the effect of the reconciling item is equal to or greater than 5 percent of the amount computed by multiplying pre-tax income by the applicable statutory rate). The amendment also requires the disclosure (on an annual basis) of information about income taxes paid (net of refunds) including the disaggregation by federal, state, and foreign taxes as well as by individual jurisdiction. Additional requirements include the disclosure of income (loss) from continuing operations before income tax expense (benefit) disaggregated between foreign and domestic as well as income tax expense (benefit) from continuing operations disaggregated by federal, state, and foreign. ASU 2023-09 is effective for the Company for the annual reporting period beginning after December 15, 2024, with early adoption being permitted. ASU 2023-09 is to be applied on a prospective basis with retrospective application permitted. The Company expects to adopt the disclosure requirements of ASU 2023-09 with its Annual Report on Form 10-K for the year ended December 31, 2025.

*Accounting Standards Update 2024-03 - Income Statement (Subtopic 220-40): Reporting Comprehensive Income - Expense Disaggregation Disclosures*

In November 2024, the FASB issued ASU 2024-03 that will require disclosure, in the notes to the financial statements, of specified information about certain costs and expenses at each interim and annual period. Disclosures should include amounts for purchases of inventory, employee compensation, depreciation, and intangible asset amortization; certain amounts that are already required to be disclosed under GAAP in the same disclosure as other disaggregation requirements; qualitative descriptions of the amounts remaining in relevant expense categories that are not disaggregated; and the total amount of selling expenses including the entity's definition of selling expenses. In January 2025, ASU 2025-01 was issued to clarify that the amendments of ASU 2024-03 are effective for public business entities for annual reporting periods beginning after December 15, 2026 and interim reporting periods beginning after December 15, 2027.

**(2) Segment Information**

TXNM has three reportable segments, namely PNM, TNMP, and Corporate and Other. The accounting policies of the segments are the same as those described in the summary of significant accounting policies. The measure of profitability used by the CODM is Segment earnings (loss) attributable to TXNM, as presented below. The CODM uses this measure of profitability to allocate resources for each segment predominantly in the annual budget and forecasting process. The CODM

Table of Contents

**TXNM ENERGY, INC. AND SUBSIDIARIES**
**PUBLIC SERVICE COMPANY OF NEW MEXICO AND SUBSIDIARIES**
**TEXAS-NEW MEXICO POWER COMPANY AND SUBSIDIARIES**

**NOTES TO CONDENSED CONSOLIDATED FINANCIAL STATEMENTS**
(Unaudited)

considers budget to actual variances on a regular basis when making decisions about allocating capital and operational expense funding to the segments. TXNM's CODM is its current President and Chief Executive Officer ("CEO") who is also the President and CEO of the PNM segment and the CEO of the TNMP segment.

**PNM**

PNM includes the retail electric utility operations of PNM that are subject to traditional rate regulation by the NMPRC. PNM provides integrated electricity services that include the generation, transmission, and distribution of electricity for retail electric customers in New Mexico. PNM also includes the generation and sale of electricity into the wholesale market, which includes the asset optimization of PNM's jurisdictional capacity as well as providing transmission services to third parties. FERC has jurisdiction over wholesale power and transmission rates. PNM includes the results of ETBC I since its formation in 2023.

**TNMP**

TNMP is an electric utility providing services in Texas under the TECA. TNMP's operations are subject to traditional rate regulation by the PUCT. TNMP provides transmission and distribution services at regulated rates to various REPs that, in turn, provide retail electric service to consumers within TNMP's service area. TNMP also provides transmission services at regulated rates to other utilities that interconnect with TNMP's facilities.

**Corporate and Other**

The Corporate and Other segment includes TXNM holding company activities, primarily related to corporate level debt and PNMR Services Company. The activities of PNMR Development and the equity method investment in NMRD were also included in Corporate and Other until the close of the sale of NMRD on February 27, 2024. Eliminations of intercompany transactions are reflected in the Corporate and Other segment.

The following tables present summarized financial information for TXNM by segment. PNM and TNMP each operate in only one segment. Therefore, tabular segment information is not presented for PNM and TNMP.

**TXNM SEGMENT INFORMATION**

| | PNM | TNMP | Corporate and Other | TXNM |
|---|---|---|---|---|
| | | (In thousands) | | |
| **Three Months Ended June 30, 2025** | | | | |
| **Electric operating revenues** | $ 338,372 | $ 164,048 | $ — | $ 502,420 |
| **Cost of energy** | | | | |
| Fuel burn | 29,927 | — | — | 29,927 |
| Purchases for resale | 88,870 | — | — | 88,870 |
| Transmission by others | 5,539 | 43,286 | — | 48,825 |
| **Significant segment expenses** | | | | |
| Administrative and general - direct | 16,603 | 134 | 50,910 | 67,647 |
| Administrative and general - corporate allocation | 35,317 | 14,110 | (49,427) | — |
| Customer related expenses | 7,606 | 750 | (12) | 8,344 |
| Energy production costs | 26,081 | — | — | 26,081 |
| Depreciation and amortization | 60,778 | 34,926 | 9,531 | 105,235 |
| Transmission and distribution costs | 15,750 | 10,711 | — | 26,461 |
| Taxes other than income taxes | 15,262 | 11,444 | 1,623 | 28,329 |
| **Total operating expenses** | 301,733 | 115,361 | 12,625 | 429,719 |
| Net other income and (deductions) | 26,545 | 1,694 | (1,588) | 26,651 |
| Interest charges | (31,975) | (23,942) | (16,096) | (72,013) |
| Income taxes (benefit) | 2,410 | 5,471 | (6,555) | 1,326 |
| Valencia non-controlling interest | (4,305) | — | — | (4,305) |
| Subsidiary preferred stock dividends | (132) | — | — | (132) |
| **Segment earnings (loss) attributable to TXNM** | $ 24,362 | $ 20,968 | $ (23,754) | $ 21,576 |

Table of Contents

**TXNM ENERGY, INC. AND SUBSIDIARIES**
**PUBLIC SERVICE COMPANY OF NEW MEXICO AND SUBSIDIARIES**
**TEXAS-NEW MEXICO POWER COMPANY AND SUBSIDIARIES**

**NOTES TO CONDENSED CONSOLIDATED FINANCIAL STATEMENTS**
(Unaudited)

| | PNM | TNMP | Corporate and Other | TXNM |
|---|---|---|---|---|
| | | | (In thousands) | |
| **Six Months Ended June 30, 2025** | | | | |
| **Electric operating revenues** | $ 671,752 | $ 313,460 | $ — | $ 985,212 |
| **Cost of energy** | | | | |
| Fuel burn | 56,468 | — | — | 56,468 |
| Purchases for resale | 186,105 | — | — | 186,105 |
| Transmission by others | 12,717 | 81,514 | — | 94,231 |
| **Significant segment expenses** | | | | |
| Administrative and general - direct | 34,469 | (1,918) | 87,480 | 120,031 |
| Administrative and general - corporate allocation | 67,405 | 27,486 | (94,891) | — |
| Customer related expenses | 15,262 | 1,467 | — | 16,729 |
| Energy production costs | 50,627 | — | — | 50,627 |
| Depreciation and amortization | 120,581 | 70,139 | 19,066 | 209,786 |
| Transmission and distribution costs | 31,576 | 20,390 | — | 51,966 |
| Taxes other than income taxes | 28,565 | 22,948 | 3,166 | 54,679 |
| **Total operating expenses** | 603,775 | 222,026 | 14,821 | 840,622 |
| Net other income and (deductions) | 29,805 | 4,100 | (1,777) | 32,128 |
| Interest charges | (61,791) | (41,264) | (32,509) | (135,564) |
| Income taxes (benefit) | 2,373 | 11,019 | (11,048) | 2,344 |
| Valencia non-controlling interest | (8,047) | — | — | (8,047) |
| Subsidiary preferred stock dividends | (264) | — | — | (264) |
| **Segment earnings (loss) attributable to TXNM** | $ 25,307 | $ 43,251 | $ (38,059) | $ 30,499 |
| **At June 30, 2025:** | | | | |
| **Total Assets** | $ 7,593,440 | $ 3,923,342 | $ 158,482 | $ 11,675,264 |
| **Goodwill** | $ 51,632 | $ 226,665 | $ — | $ 278,297 |
| **Three Months Ended June 30, 2024** | | | | |
| **Electric operating revenues** | $ 333,671 | $ 154,431 | $ — | $ 488,102 |
| **Cost of energy** | | | | |
| Fuel burn | 41,821 | — | — | 41,821 |
| Purchases for resale | 68,047 | — | — | 68,047 |
| Transmission by others | 4,904 | 39,934 | — | 44,838 |
| **Significant segment expenses** | | | | |
| Administrative and general - direct | 16,111 | 45 | 34,854 | 51,010 |
| Administrative and general - corporate allocation | 31,023 | 12,885 | (43,908) | — |
| Customer related expenses | 7,742 | 775 | 54 | 8,571 |
| Energy production costs | 24,584 | — | — | 24,584 |
| Depreciation and amortization | 54,230 | 31,033 | 9,150 | 94,413 |
| Transmission and distribution costs | 15,350 | 9,701 | — | 25,051 |
| Taxes other than income taxes | 11,768 | 10,743 | 1,573 | 24,084 |
| **Total operating expenses** | 275,580 | 105,116 | 1,723 | 382,419 |
| Net other income and (deductions) | 8,312 | 2,832 | (64) | 11,080 |
| Interest charges | (25,880) | (14,451) | (15,497) | (55,828) |
| Income taxes (benefit) | 5,821 | 7,771 | (4,621) | 8,971 |
| Valencia non-controlling interest | (3,783) | — | — | (3,783) |
| Subsidiary preferred stock dividends | (132) | — | — | (132) |
| **Segment earnings (loss) attributable to TXNM** | $ 30,787 | $ 29,925 | $ (12,663) | $ 48,049 |

Table of Contents

**TXNM ENERGY, INC. AND SUBSIDIARIES**
**PUBLIC SERVICE COMPANY OF NEW MEXICO AND SUBSIDIARIES**
**TEXAS-NEW MEXICO POWER COMPANY AND SUBSIDIARIES**

**NOTES TO CONDENSED CONSOLIDATED FINANCIAL STATEMENTS**
(Unaudited)

| | PNM | TNMP | Corporate and Other | TXNM |
|---|---|---|---|---|
| | | (In thousands) | | |
| **Six Months Ended June 30, 2024** | | | | |
| **Electric operating revenues** | $ 641,786 | $ 283,193 | $ — | $ 924,979 |
| **Cost of energy** | | | | |
| Fuel burn | 78,502 | — | — | 78,502 |
| Purchases for resale | 122,516 | — | — | 122,516 |
| Transmission by others | 11,166 | 74,826 | — | 85,992 |
| **Significant segment expenses** | | | | |
| Administrative and general - direct | 25,150 | (1,239) | 74,494 | 98,405 |
| Administrative and general - corporate allocation | 66,430 | 27,121 | (93,551) | — |
| Customer related expenses | 15,032 | 1,492 | 79 | 16,603 |
| Energy production costs | 46,796 | — | — | 46,796 |
| Regulatory disallowances | 4,459 | — | — | 4,459 |
| Depreciation and amortization | 107,517 | 61,415 | 18,668 | 187,600 |
| Transmission and distribution costs | 29,700 | 18,115 | — | 47,815 |
| Taxes other than income taxes | 25,477 | 21,410 | 3,131 | 50,018 |
| **Total operating expenses** | 532,745 | 203,140 | 2,821 | 738,706 |
| Net other income and (deductions) | 33,385 | 3,877 | (15,215) | 22,047 |
| Interest charges | (50,996) | (27,787) | (30,807) | (109,590) |
| Income taxes (benefit) | 11,632 | 11,635 | (26,867) | (3,600) |
| Valencia non-controlling interest | (6,827) | — | — | (6,827) |
| Subsidiary preferred stock dividends | (264) | — | — | (264) |
| **Segment earnings (loss) attributable to TXNM** | $ 72,707 | $ 44,508 | $ (21,976) | $ 95,239 |
| **At June 30, 2024:** | | | | |
| **Total Assets** | $ 7,060,151 | $ 3,354,923 | $ 168,336 | $ 10,583,410 |
| **Goodwill** | $ 51,632 | $ 226,665 | $ — | $ 278,297 |

*Significant Segment Expenses*

Reflected above are certain additional categories of operating expenses that are regularly provided to the CODM. Cost of energy consists primarily of fuel and purchase power costs for PNM and costs charged by third-party transmission providers for TNMP. Administrative and general - direct expenses are those that are incurred directly by the segment while Administrative and general - corporate allocation are those costs that are incurred by the Corporate and Other segment and allocated to the utilities based on the nature of the cost incurred. Administrative and general - corporate allocation is eliminated in the Corporate and Other segment. Customer related expenses include meter reading, customer service, and bad debt expenses.

Table of Contents

**TXNM ENERGY, INC. AND SUBSIDIARIES**
**PUBLIC SERVICE COMPANY OF NEW MEXICO AND SUBSIDIARIES**
**TEXAS-NEW MEXICO POWER COMPANY AND SUBSIDIARIES**

**NOTES TO CONDENSED CONSOLIDATED FINANCIAL STATEMENTS**
(Unaudited)

**(3) Accumulated Other Comprehensive Income (Loss)**

Information regarding accumulated other comprehensive income (loss) for the six months ended June 30, 2025 and 2024 is as follows:

| | Accumulated Other Comprehensive Income (Loss) | | | | |
|---|---|---|---|---|---|
| | PNM | | | Corporate and Other | TXNM |
| | Unrealized Gains on Available-for-Sale Debt Securities | Pension Liability Adjustment | Total | Fair Value Adjustment for Cash Flow Hedges | Total |
| | | | (In thousands) | | |
| **Balance at December 31, 2024** | $ 214 | $ (75,922) | $ (75,708) | $ — | $ (75,708) |
| Amounts reclassified from AOCI (pre-tax) | (338) | 2,749 | 2,411 | — | 2,411 |
| Income tax impact of amounts reclassified | 86 | (698) | (612) | — | (612) |
| Other OCI changes (pre-tax) | 504 | — | 504 | (2,493) | (1,989) |
| Income tax impact of other OCI changes | (128) | — | (128) | 633 | 505 |
| Net after-tax change | 124 | 2,051 | 2,175 | (1,860) | 315 |
| **Balance at June 30, 2025** | $ 338 | $ (73,871) | $ (73,533) | $ (1,860) | $ (75,393) |

| | | | | | |
|---|---|---|---|---|---|
| **Balance at December 31, 2023** | $ 10,652 | $ (77,157) | $ (66,505) | $ 3,665 | $ (62,840) |
| Amounts reclassified from AOCI (pre-tax) | (12,566) | 2,433 | (10,133) | 5,563 | (4,570) |
| Income tax impact of amounts reclassified | 3,192 | (618) | 2,574 | (1,413) | 1,161 |
| Other OCI changes (pre-tax) | (587) | — | (587) | (4,307) | (4,894) |
| Income tax impact of other OCI changes | 149 | — | 149 | 1,094 | 1,243 |
| Net after-tax change | (9,812) | 1,815 | (7,997) | 937 | (7,060) |
| **Balance at June 30, 2024** | $ 840 | $ (75,342) | $ (74,502) | $ 4,602 | $ (69,900) |

The Condensed Consolidated Statements of Earnings include pre-tax amounts reclassified from AOCI related to Unrealized Gains on Available-for-Sale Debt Securities in gains on investment securities and Fair Value Adjustment for Cash Flow Hedges in interest charges. The income tax impacts of all amounts reclassified from AOCI are included in income taxes in the Condensed Consolidated Statements of Earnings.

**(4) Earnings Per Share**

Basic earnings per share is computed by dividing net earnings attributable to TXNM by the weighted average number of common shares outstanding during the period. Diluted earnings per share was computed by dividing net earnings attributable to TXNM by the diluted weighted average number of common shares outstanding during the period. Diluted earnings per share reflect the potential dilution that could occur if securities or other agreements to issue common stock were settled. TXNM applies the treasury stock method for restricted stock and the unsettled shares sold under forward sale agreements pursuant to the TXNM ATM Programs.

Table of Contents

**TXNM ENERGY, INC. AND SUBSIDIARIES**
**PUBLIC SERVICE COMPANY OF NEW MEXICO AND SUBSIDIARIES**
**TEXAS-NEW MEXICO POWER COMPANY AND SUBSIDIARIES**

**NOTES TO CONDENSED CONSOLIDATED FINANCIAL STATEMENTS**
(Unaudited)

Information regarding the computation of earnings per share is as follows:

| | Three Months Ended June 30, | | Six Months Ended June 30, | |
|---|---|---|---|---|
| | 2025 | 2024 | 2025 | 2024 |
| | (In thousands, except per share amounts) | | | |
| **Net Earnings Attributable to TXNM** | $ 21,576 | $ 48,049 | $ 30,499 | $ 95,239 |
| **Average Number of Common Shares:** | | | | |
| Outstanding during period | 95,793 | 90,200 | 94,235 | 90,200 |
| Vested awards of restricted stock | 339 | 304 | 348 | 293 |
| **Average Shares – Basic** | 96,132 | 90,504 | 94,583 | 90,493 |
| **Dilutive Effect of Common Stock Equivalents:** | | | | |
| Restricted stock | 65 | 48 | 54 | 40 |
| **Average Shares – Diluted** | 96,197 | 90,552 | 94,637 | 90,533 |
| **Net Earnings Per Share of Common Stock:** | | | | |
| Basic | $ 0.22 | $ 0.53 | $ 0.32 | $ 1.05 |
| Diluted | $ 0.22 | $ 0.53 | $ 0.32 | $ 1.05 |

TXNM's weighted average number of common shares outstanding for the three and six months ended June 30, 2025 was impacted by the settlement of the 1.1 million shares forward sold under the TXNM 2024 ATM Program and the issuance of 11.6 million shares of common stock in private placement transactions. See Note 9.

**(5) Electric Operating Revenues**

TXNM is an investor-owned holding company with two regulated utilities providing electricity and electric services in New Mexico and Texas. TXNM's electric utilities are PNM and TNMP. Additional information concerning electric operating revenue is contained in Note 4 of the Notes to Consolidated Financial Statements in the 2024 Annual Reports on Form 10-K.

**Accounts Receivable and Allowance for Credit Losses**

Accounts receivable consists primarily of trade receivables from customers. In the normal course of business, credit is extended to customers on a short-term basis. The Company estimates the allowance for credit losses on trade receivables based on historical experience and estimated default rates. Accounts receivable balances are reviewed monthly, adjustments to the allowance for credit losses are made as necessary and amounts that are deemed uncollectible are written off. In addition to the allowance for credit losses on trade receivables, the Company has evaluated other receivables for potential credit related losses. These balances include potential exposures for other non-retail utility services. In the three and six months ended June 30, 2025 and 2024, there were no estimated credit losses related to these transactions.

**Contract Balances**

Performance obligations related to contracts with customers are typically satisfied when the energy is delivered and the customer or end-user utilizes the energy. Accounts receivable from customers represent amounts billed, including amounts under ARPs. For PNM, accounts receivable reflected on the Condensed Consolidated Balance Sheets, net of allowance for credit losses, includes $106.7 million at June 30, 2025 and $94.3 million at December 31, 2024 resulting from contracts with customers. All of TNMP's accounts receivable result from contracts with customers.

Contract assets are an entity's right to consideration in exchange for goods or services that the entity has transferred to a customer when that right is conditioned on something other than the passage of time (for example, the entity's future performance). Upon the completion of the Western Spirit Line, PNM entered into a TSA with Pattern Wind under an incremental tariff rate approved by FERC. The terms of the agreement provide for a financing component that benefits the customer. As such, the revenue that PNM recognizes will be in excess of the consideration received at the beginning of the service term resulting in a contract asset. The balance of the contract asset is $36.8 million at June 30, 2025 and $32.0 million at December 31, 2024. This contract asset is presented in Other deferred charges on the Condensed Consolidated Balance Sheets.

Table of Contents

**TXNM ENERGY, INC. AND SUBSIDIARIES**
**PUBLIC SERVICE COMPANY OF NEW MEXICO AND SUBSIDIARIES**
**TEXAS-NEW MEXICO POWER COMPANY AND SUBSIDIARIES**

**NOTES TO CONDENSED CONSOLIDATED FINANCIAL STATEMENTS**
(Unaudited)

**Disaggregation of Revenues**

A disaggregation of revenues from contracts with customers by the type of customer is presented in the table below.

| | PNM | TNMP | TXNM |
|---|---|---|---|
| **Three Months Ended June 30, 2025** | | (In thousands) | |
| **Electric Operating Revenues:** | | | |
| Contracts with customers: | | | |
| Retail electric revenue | | | |
| Residential | $ 120,009 | $ 54,176 | $ 174,185 |
| Commercial | 111,840 | 44,459 | 156,299 |
| Industrial | 34,659 | 14,305 | 48,964 |
| Public authority | 5,694 | 1,988 | 7,682 |
| Economy energy service | 6,762 | — | 6,762 |
| Transmission | 36,352 | 41,279 | 77,631 |
| Wholesale energy sales | 19,895 | — | 19,895 |
| Miscellaneous | 1,448 | 952 | 2,400 |
| Total revenues from contracts with customers | 336,659 | 157,159 | 493,818 |
| Alternative revenue programs | 245 | 6,889 | 7,134 |
| Other electric operating revenues | 1,468 | — | 1,468 |
| **Total Electric Operating Revenues** | $ 338,372 | $ 164,048 | $ 502,420 |
| **Six Months Ended June 30, 2025** | | | |
| **Electric Operating Revenues:** | | | |
| Contracts with customers: | | | |
| Retail electric revenue | | | |
| Residential | $ 244,563 | $ 102,957 | $ 347,520 |
| Commercial | 213,999 | 91,421 | 305,420 |
| Industrial | 68,291 | 25,851 | 94,142 |
| Public authority | 10,712 | 3,982 | 14,694 |
| Economy energy service | 17,998 | — | 17,998 |
| Transmission | 71,369 | 81,498 | 152,867 |
| Wholesale energy sales | 36,824 | — | 36,824 |
| Miscellaneous | 2,860 | 1,906 | 4,766 |
| Total revenues from contracts with customers | 666,616 | 307,615 | 974,231 |
| Alternative revenue programs | 2,391 | 5,845 | 8,236 |
| Other electric operating revenues | 2,745 | — | 2,745 |
| **Total Electric Operating Revenues** | $ 671,752 | $ 313,460 | $ 985,212 |

Table of Contents

**TXNM ENERGY, INC. AND SUBSIDIARIES**
**PUBLIC SERVICE COMPANY OF NEW MEXICO AND SUBSIDIARIES**
**TEXAS-NEW MEXICO POWER COMPANY AND SUBSIDIARIES**

**NOTES TO CONDENSED CONSOLIDATED FINANCIAL STATEMENTS**
(Unaudited)

| | PNM | TNMP | TXNM |
|---|---|---|---|
| **Three Months Ended June 30, 2024** | | (In thousands) | |
| **Electric Operating Revenues:** | | | |
| Contracts with customers: | | | |
| Retail electric revenue | | | |
| Residential | $ 121,065 | $ 47,313 | $ 168,378 |
| Commercial | 109,929 | 40,499 | 150,428 |
| Industrial | 34,201 | 7,917 | 42,118 |
| Public authority | 5,216 | 1,740 | 6,956 |
| Economy energy service | 4,033 | — | 4,033 |
| Transmission | 33,333 | 42,116 | 75,449 |
| Wholesale energy sales | 23,507 | — | 23,507 |
| Miscellaneous | 1,389 | 962 | 2,351 |
| Total revenues from contracts with customers | 332,673 | 140,547 | 473,220 |
| Alternative revenue programs | 830 | 13,884 | 14,714 |
| Other electric operating revenues | 168 | — | 168 |
| **Total Electric Operating Revenues** | $ 333,671 | $ 154,431 | $ 488,102 |
| **Six Months Ended June 30, 2024** | | | |
| **Electric Operating Revenues:** | | | |
| Contracts with customers: | | | |
| Retail electric revenue | | | |
| Residential | $ 241,450 | $ 88,808 | $ 330,258 |
| Commercial | 209,266 | 76,043 | 285,309 |
| Industrial | 58,970 | 17,773 | 76,743 |
| Public authority | 9,614 | 3,456 | 13,070 |
| Economy energy service | 11,595 | — | 11,595 |
| Transmission | 69,482 | 77,925 | 147,407 |
| Wholesale energy sales | 35,197 | — | 35,197 |
| Miscellaneous | 2,814 | 1,917 | 4,731 |
| Total revenues from contracts with customers | 638,388 | 265,922 | 904,310 |
| Alternative revenue programs | 2,736 | 17,271 | 20,007 |
| Other electric operating revenues | 662 | — | 662 |
| **Total Electric Operating Revenues** | $ 641,786 | $ 283,193 | $ 924,979 |

**(6) Variable Interest Entities**

How an enterprise evaluates and accounts for its involvement with variable interest entities focuses primarily on whether the enterprise has the power to direct the activities that most significantly impact the economic performance of a VIE. This evaluation requires continual reassessment of the primary beneficiary of a VIE. Additional information concerning PNM's VIEs is contained in Note 10 of the Notes to Consolidated Financial Statements in the 2024 Annual Reports on Form 10-K.

**Valencia**

PNM has a PPA to purchase all of the electric capacity and energy from Valencia, a 155 MW natural gas-fired power plant near Belen, New Mexico, through May 2028. In May 2025, the NMPRC approved a new PPA for 167 MW, through 2039, in connection with the 2028 Resource Application. A third party built, owns, and operates the facility while PNM is the sole purchaser of the electricity generated. PNM is obligated to pay fixed operation and maintenance and capacity charges in addition to variable operation and maintenance charges. For the three and six months ended June 30, 2025, PNM paid $5.0 million and $9.9 million for fixed charges and $0.9 million and $1.4 million for variable charges. For the three and six months ended June 30, 2024, PNM paid $5.1 million and $10.2 million for fixed charges and $0.4 million and $0.5 million for variable

Table of Contents

**TXNM ENERGY, INC. AND SUBSIDIARIES**
**PUBLIC SERVICE COMPANY OF NEW MEXICO AND SUBSIDIARIES**
**TEXAS-NEW MEXICO POWER COMPANY AND SUBSIDIARIES**

**NOTES TO CONDENSED CONSOLIDATED FINANCIAL STATEMENTS**
(Unaudited)

charges. PNM does not have any other financial obligations related to Valencia. The assets of Valencia can only be used to satisfy its obligations and creditors of Valencia do not have any recourse against PNM's assets. During the term of the original PPA, PNM has the option, under certain conditions, to purchase and own up to 50% of the plant or the VIE. The original PPA specifies that the purchase price would be the greater of 50% of book value reduced by related indebtedness or 50% of fair market value.

PNM sources fuel for the plant, controls when the facility operates through its dispatch, and receives the entire output of the plant, which factors directly and significantly impact the economic performance of Valencia. Therefore, PNM has concluded that the third-party entity that owns Valencia is a VIE and that PNM is the primary beneficiary of the entity since PNM has the power to direct the activities that most significantly impact the economic performance of Valencia and will absorb the majority of the variability in the cash flows of the plant. As the primary beneficiary, PNM consolidates Valencia in its financial statements. Accordingly, the assets, liabilities, operating expenses, and cash flows of Valencia are included in the Condensed Consolidated Financial Statements of PNM although PNM has no legal ownership interest or voting control of the VIE. The assets and liabilities of Valencia are set forth below and are not shown separately on the Condensed Consolidated Balance Sheets. The owner's equity and net income of Valencia are considered attributable to non-controlling interest.

Summarized financial information for Valencia is as follows:

**Results of Operations**

| | Three Months Ended June 30, | | Six Months Ended June 30, | |
|---|---|---|---|---|
| | 2025 | 2024 | 2025 | 2024 |
| | (In thousands) | | | |
| Operating revenues | $ 5,926 | $ 5,476 | $ 11,348 | $ 10,665 |
| Operating expenses | 1,621 | 1,693 | 3,301 | 3,838 |
| Earnings attributable to non-controlling interest | $ 4,305 | $ 3,783 | $ 8,047 | $ 6,827 |

**Financial Position**

| | June 30, 2025 | December 31, 2024 |
|---|---|---|
| | (In thousands) | |
| Current assets | $ 3,592 | $ 3,095 |
| Net property, plant, and equipment | 42,990 | 44,411 |
| Total assets | 46,582 | 47,506 |
| Current liabilities | 553 | 606 |
| Owners' Equity – Non-controlling Interest | $ 46,029 | $ 46,900 |

**Westmoreland San Juan Mining, LLC**

As discussed in the subheading Coal Supply in Note 11, PNM and Westmoreland San Juan Mining, LLC ("WSJ LLC"), a subsidiary of Westmoreland Mining Holdings, LLC have agreements under which mine reclamation services for SJGS will be provided.

TXNM issued $30.3 million in letters of credit to facilitate the issuance of reclamation bonds. The letters of credit support results in TXNM having a variable interest in WSJ LLC since TXNM is subject to possible loss in the event performance by TXNM is required under the letters of credit support. TXNM considers the possibility of loss under the letters of credit support to be remote since the purpose of posting the bonds is to provide assurance that WSJ LLC performs the required reclamation of the mine site in accordance with applicable regulations and the reclamation services agreement provides WSJ LLC the ability to recover the cost of reclamation. As discussed in Note 11, each of the SJGS participants has established and actively fund trusts to meet future reclamation obligations.

WSJ LLC is considered a VIE. TXNM's analysis of its arrangements with WSJ LLC concluded that WSJ LLC has the ability to direct its reclamation services, which are the factors that most significantly impact the economic performance of WSJ LLC. Other than PNM being able to monitor the reclamation activities, the reclamation services were solely under the control of WSJ LLC, including developing reclamation plans, hiring personnel, and incurring operating and maintenance expenses.

Table of Contents

**TXNM ENERGY, INC. AND SUBSIDIARIES**
**PUBLIC SERVICE COMPANY OF NEW MEXICO AND SUBSIDIARIES**
**TEXAS-NEW MEXICO POWER COMPANY AND SUBSIDIARIES**

**NOTES TO CONDENSED CONSOLIDATED FINANCIAL STATEMENTS**
(Unaudited)

Neither TXNM nor PNM has any ability to direct or influence the reclamation activities. PNM's involvement through the reclamation services agreement is a protective right rather than a participating right, and WSJ LLC still has the power to direct the activities that most significantly impact the economic performance of WSJ LLC. If WSJ LLC performs reclamation services more efficiently than anticipated, its economic performance will improve. Conversely, if WSJ LLC does not perform reclamation services as efficiently as anticipated, its economic performance will be negatively impacted. Accordingly, TXNM believes WSJ LLC is the primary beneficiary and, therefore, WSJ LLC is not consolidated by either TXNM or PNM. The amounts outstanding under the letters of credit support continue to be TXNM's maximum exposure to loss from the VIE at June 30, 2025.

**ETBC I**

ETBC I is a wholly-owned, special purpose subsidiary of PNM that was formed in August 2023 for the limited purpose of purchasing, owning, and administering energy transition property, issuing securitized bonds, and performing related activities authorized by the NMPRC. On November 15, 2023, ETBC I issued the ETBC I Securitized Bonds and used the proceeds to purchase energy transition property from PNM. The energy transition property purchased includes the right to impose, bill, collect, and adjust a non-bypassable energy transition charge from all PNM retail customers until the ETBC I Securitized Bonds are paid in full and all allowed financing costs have been recovered. The ETBC I Securitized Bonds are secured by the energy transition property, and cash collections from the Energy Transition Charges are the sole source of funds to satisfy the debt obligation. The bondholders have no recourse to PNM.

PNM acts as the servicer of the energy transition property on behalf of ETBC I and is responsible for metering, calculating, billing, and collecting the Energy Transition Charges. On behalf of ETBC I, PNM is required to remit all collections of the Energy Transition Charges to the trustee for the ETBC I Securitized Bonds. PNM has the power to direct the activities that most significantly impact the economic performance of ETBC I and will absorb the majority of the variability in the cash flows of the entity. As the primary beneficiary, PNM consolidates ETBC I in its financial statements. Accordingly, the assets, liabilities, operating expenses, and cash flows of ETBC I are included in the Consolidated Financial Statements of PNM.

The following tables summarize the impact of ETBC I on PNM's Financial Statements:

| | Results of Operations | | | |
|---|---|---|---|---|
| | Three Months Ended June 30, | | Six Months Ended June 30, | |
| | 2025 | 2024 | 2025 | 2024 |
| | (In thousands) | | | |
| Electric Operating Revenues | $ 6,609 | $ 5,811 | $ 13,408 | $ 11,756 |
| Depreciation and amortization | 1,724 | 821 | 3,424 | 1,643 |
| Interest Charges | 4,947 | 5,039 | 9,918 | 10,064 |
| Other | (62) | (49) | 66 | 49 |
| Net Earnings | $ — | $ — | $ — | $ — |

| | Financial Position | |
|---|---|---|
| | June 30, 2025 | December 31, 2024 |
| | (In thousands) | |
| Regulatory assets - Current | $ — | $ — |
| Restricted cash (included in Other current assets) | 13,610 | 15,838 |
| Restricted cash (included in Other deferred charges) | 1,744 | 1,748 |
| Securitized Cost (included in Regulatory assets - Deferred) | 332,655 | 336,079 |
| Current installments of long-term debt | 7,102 | 6,907 |
| Accrued interest and taxes | 7,380 | 7,452 |
| Regulatory liabilities - Current | 4,739 | 6,975 |
| Long-term Debt | 328,179 | 331,726 |

Table of Contents

**TXNM ENERGY, INC. AND SUBSIDIARIES**
**PUBLIC SERVICE COMPANY OF NEW MEXICO AND SUBSIDIARIES**
**TEXAS-NEW MEXICO POWER COMPANY AND SUBSIDIARIES**

**NOTES TO CONDENSED CONSOLIDATED FINANCIAL STATEMENTS**
(Unaudited)

## (7) Fair Value of Derivative and Other Financial Instruments

Additional information concerning energy related derivative contracts and other financial instruments is contained in Note 9 of the Notes to Consolidated Financial Statements in the 2024 Annual Reports on Form 10-K.

Fair value is defined as the price that would be received for an asset or paid to transfer a liability (an exit price) in the principal or most advantageous market for the asset or liability in an orderly transaction between market participants on the measurement date. Fair value is based on current market quotes as available and is supplemented by modeling techniques and assumptions made by the Company to the extent quoted market prices or volatilities are not available. External pricing input availability varies based on commodity location, market liquidity, and term of the agreement. Valuations of derivative assets and liabilities take into account nonperformance risk, including the effect of counterparties' and the Company's credit risk. The Company regularly assesses the validity and availability of pricing data for its derivative transactions. Although the Company uses its best judgment in estimating the fair value of these instruments, there are inherent limitations in any estimation technique.

### Energy Related Derivative Contracts

**Overview**

The primary objective for the use of commodity derivative instruments, including energy contracts, options, swaps, and futures, is to manage price risk associated with forecasted purchases of energy and fuel used to generate electricity, as well as managing anticipated generation capacity in excess of forecasted demand from existing customers. PNM's energy related derivative contracts manage commodity risk. TNMP does not enter into energy related derivative contracts.

PNM enters into agreements for the purchase and sale of power from third parties. As PNM is required to meet the demand and energy needs of its customers, PNM may be exposed to market risk for the needs of its customers not covered under the FPPAC.

PNM's operations are managed primarily through a net asset-backed strategy, whereby PNM's aggregate net open forward contract position is covered by its forecasted excess generation capabilities or market purchases. PNM could be exposed to market risk if its generation capabilities were to be disrupted or if its load requirements were to be greater than anticipated. If all or a portion of load requirements were required to be covered as a result of such unexpected situations, commitments would have to be met through market purchases.

**Commodity Risk**

Marketing and procurement of energy often involve market risks associated with managing energy commodities and establishing positions in the energy markets, primarily on a short-term basis. PNM routinely enters into various derivative instruments such as forward contracts, option agreements, and price basis swap agreements to economically hedge price and volume risk on power commitments and fuel requirements and to minimize the effect of market fluctuations. PNM monitors the market risk of its commodity contracts in accordance with approved risk and credit policies.

**Accounting for Derivatives**

Under derivative accounting and related rules for energy contracts, PNM accounts for its various instruments for the purchase and sale of energy, which meet the definition of a derivative, based on PNM's intent. During the six months ended June 30, 2025 and the year ended December 31, 2024, PNM was not hedging its exposure to the variability in future cash flows from commodity derivatives through designated cash flow hedges. The derivative contracts recorded at fair value that do not qualify or are not designated for cash flow hedge accounting are classified as economic hedges. Economic hedges are defined as derivative instruments, including long-term power agreements, used to economically hedge generation assets, purchased power and fuel costs, and customer load requirements. Changes in the fair value of economic hedges are reflected in Operating income on the Condensed Consolidated Statements of Earnings and are presented in Electric Operating Revenues and Cost of energy according to the intent of the hedge. PNM also uses such instruments under an NMPRC-approved hedging plan to manage fuel and purchased power costs related to customers covered by its FPPAC. Changes in the fair value of instruments covered by its FPPAC are recorded as Regulatory assets and Regulatory liabilities on the Condensed Consolidated Balance Sheets. The cash impacts of settled derivatives are recorded as operating activities or financing activities on the Condensed Consolidated Statement of Cash Flows consistent with the classification of the hedged transaction. PNM has no trading transactions.

Table of Contents

**TXNM ENERGY, INC. AND SUBSIDIARIES**
**PUBLIC SERVICE COMPANY OF NEW MEXICO AND SUBSIDIARIES**
**TEXAS-NEW MEXICO POWER COMPANY AND SUBSIDIARIES**

**NOTES TO CONDENSED CONSOLIDATED FINANCIAL STATEMENTS**
(Unaudited)

**Commodity Derivatives**

In November 2024, February 2025, and April 2025, PNM entered into agreements to purchase a total of 250 MW from July 1, 2025 through August 31, 2025 in order to ensure that customer demand during the 2025 summer peak load period will be met. In 2024, PNM had existing agreements to purchase a total of 150 MW from July 1, 2024 through July 31, 2024 and 100 MW from August 1, 2024 through August 30, 2024. All of these agreements are related to customers covered by the FPPAC and are reflected in the commodity derivative table for each of the periods presented below.

PNM's commodity derivative instruments that are recorded at fair value, all of which are accounted for as economic hedges and considered Level 2 fair value measurements, are presented in the following line items on the Condensed Consolidated Balance Sheets:

| | Economic Hedges | |
|---|---|---|
| | June 30, 2025 | December 31, 2024 |
| | (In thousands) | |
| Other current assets | $ — | $ — |
| Other current liabilities | (8,940) | (5,737) |
| Net | $ (8,940) | $ (5,737) |

Certain of PNM's commodity derivative instruments in the above table are subject to master netting agreements whereby assets and liabilities could be offset in the settlement process. PNM does not offset fair value and cash collateral for derivative instruments under master netting arrangements and the above table reflects the gross amounts of fair value assets and liabilities for commodity derivatives.

At June 30, 2025 and December 31, 2024, PNM had no commodity derivative instruments, considered economic hedges, that did not pertain to the NMPRC-approved hedging plan discussed above. Changes in fair value had no impact on PNM's net earnings during the six months ended June 30, 2025 and 2024.

Commodity contract volume positions are presented in MMBTU for gas related contracts and in MWh for power related contracts. The table below presents PNM's net buy (sell) volume positions:

| | Economic Hedges | |
|---|---|---|
| | MMBTU | MWh |
| June 30, 2025 | — | 179,800 |
| December 31, 2024 | — | 89,900 |

PNM has contingent requirements to provide collateral under commodity contracts having an objectively determinable collateral provision that are in net liability positions and are not fully collateralized with cash. In connection with managing its commodity risks, PNM enters into master agreements with certain counterparties. If PNM is in a net liability position under an agreement, some agreements provide that the counterparties can request collateral if PNM's credit rating is downgraded; other agreements provide that the counterparty may request collateral to provide it with "adequate assurance" that PNM will perform; and others have no provision for collateral.

The table below presents information about PNM's contingent requirements to provide collateral under certain commodity contracts having an objectively determinable collateral provision, that are in net liability positions, and that are not fully collateralized with cash. Contractual liability represents those commodity derivative contracts recorded at fair value on the balance sheet, determined on an individual contract basis without offsetting amounts for individual contracts that are in an asset position and could be offset under master netting agreements with the same counterparty. Cash collateral posted under these contracts does not reflect letters of credit under the Company's revolving credit facilities that may have been issued as collateral.

Table of Contents

**TXNM ENERGY, INC. AND SUBSIDIARIES**
**PUBLIC SERVICE COMPANY OF NEW MEXICO AND SUBSIDIARIES**
**TEXAS-NEW MEXICO POWER COMPANY AND SUBSIDIARIES**

**NOTES TO CONDENSED CONSOLIDATED FINANCIAL STATEMENTS**
(Unaudited)

Net exposure is the net contractual liability for all contracts, including those designated as normal purchase and normal sale, offset by existing collateral and by any offsets available under master netting agreements, including both assets and liability positions.

| Contingent Feature - Credit Rating | Contractual Liability | Existing Cash Collateral | Net Exposure |
|---|---|---|---|
| | | (In thousands) | |
| June 30, 2025 | $ 8,940 | $ — | $ 8,940 |
| December 31, 2024 | $ 5,737 | $ — | $ 5,737 |

At June 30, 2025 and December 31, 2024, PNM had no amounts recognized for the legal right to reclaim cash collateral. However, amounts posted as cash collateral under margin arrangements were zero at June 30, 2025 and $0.1 million at December 31, 2024. These amounts are included in other current assets on the Condensed Consolidated Balance Sheets. At both June 30, 2025 and December 31, 2024, there were no obligations to return cash collateral.

**Non-Derivative Financial Instruments**

The carrying amounts reflected on the Condensed Consolidated Balance Sheets approximate fair value for cash, receivables, and payables due to the short period of maturity. Investment securities are carried at fair value. Investment securities consist of PNM assets held in the NDT for its share of decommissioning costs of PVNGS, a trust for PNM's share of decommissioning costs at SJGS, and trusts for PNM's share of final reclamation costs related to the coal mines serving SJGS and Four Corners. See Note 11. At June 30, 2025 and December 31, 2024, the fair value of investment securities included $407.0 million and $384.6 million for the NDT, $4.0 million and $8.2 million for the SJGS decommissioning trust, and $76.0 million and $82.7 million for the coal mine reclamation trusts.

PNM records a realized loss as an impairment for any available-for-sale debt security that has a fair value that is less than its carrying value. At June 30, 2025 and December 31, 2024, PNM had no available-for-sale debt securities for which carrying value exceeded fair value, where the impairments were considered to be "other than temporary" and included in AOCI rather than recognized in earnings. All gains and losses resulting from sales and changes in the fair value of equity securities are recognized immediately in earnings. Gains and losses recognized on the Condensed Consolidated Statements of Earnings related to investment securities in the NDT, SJGS decommissioning, and coal mine reclamation trusts are presented in the following table:

| | Three Months Ended June 30, | | Six Months Ended June 30, | |
|---|---|---|---|---|
| | 2025 | 2024 | 2025 | 2024 |
| | (In thousands) | | | |
| Equity securities: | | | | |
| Net gains from equity securities sold | $ 6,940 | $ 6,272 | $ 13,932 | $ 16,143 |
| Net gains (losses) on equity securities still held | 16,616 | (3,880) | 8,373 | (5,085) |
| Total net gains on equity securities | 23,556 | 2,392 | 22,305 | 11,058 |
| Available-for-sale debt securities: | | | | |
| Net gains (losses) on debt securities | — | (1,834) | 10 | 7,498 |
| Net gains on investment securities | $ 23,556 | $ 558 | $ 22,315 | $ 18,556 |

Table of Contents

**TXNM ENERGY, INC. AND SUBSIDIARIES**
**PUBLIC SERVICE COMPANY OF NEW MEXICO AND SUBSIDIARIES**
**TEXAS-NEW MEXICO POWER COMPANY AND SUBSIDIARIES**

**NOTES TO CONDENSED CONSOLIDATED FINANCIAL STATEMENTS**
(Unaudited)

The proceeds and gross realized gains and losses on the disposition of securities held in the NDT, SJGS decommissioning trust, and coal mine reclamation trusts are shown in the following table. Realized gains and losses are determined by specific identification of costs of securities sold. Gross realized losses shown below exclude the (increase)/decrease in realized impairment losses of zero for the three and six months ended June 30, 2025 and $1.6 million and $15.0 million for the three and six months ended June 30, 2024.

| | Three Months Ended June 30, | | Six Months Ended June 30, | |
|---|---|---|---|---|
| | 2025 | 2024 | 2025 | 2024 |
| | (In thousands) | | | |
| Proceeds from sales | $ 108,625 | $ 110,240 | $ 198,728 | $ 412,750 |
| Gross realized gains | 7,859 | 7,549 | 15,541 | 21,228 |
| Gross realized (losses) | (919) | (4,661) | (1,609) | (12,573) |

At June 30, 2025, the available-for-sale debt securities held by PNM, had the following final maturities:

| | Fair Value |
|---|---|
| | (In thousands) |
| Within 1 year | $ 40,966 |
| After 1 year through 5 years | 9,554 |
| | $ 50,520 |

**Fair Value Disclosures**

The Company determines the fair values of its derivative and other financial instruments based on the hierarchy that requires an entity to maximize the use of observable inputs and minimize the use of unobservable inputs when measuring fair value. There are three levels of inputs that may be used to measure fair value. Level 1 inputs are quoted prices (unadjusted) in active markets for identical assets or liabilities that the reporting entity has the ability to access at the measurement date. Level 2 inputs are inputs other than quoted prices included within Level 1 that are observable for the asset or liability, either directly or indirectly. Level 3 inputs are unobservable inputs for the asset or liability.

For investment securities, Level 2 fair values are provided by fund managers utilizing a pricing service. For Level 2 fair values, the pricing provider predominantly uses the market approach using bid side market values based upon a hierarchy of information for specific securities or securities with similar characteristics. Fair values of Level 2 investments in mutual funds are equal to NAV. For commodity derivatives, Level 2 fair values are determined based on market observable inputs, which are validated using multiple broker quotes, including forward price, volatility, and interest rate curves to establish expectations of future prices. Credit valuation adjustments are made for estimated credit losses based on the overall exposure to each counterparty. For the Company's long-term debt, Level 2 fair values are provided by an external pricing service. The pricing service primarily utilizes quoted prices for similar debt in active markets when determining fair value. Management of the Company independently verifies the information provided by pricing services. Uncategorized investments include common/collective investment trusts and real estate funds which are measured at NAV at the end of each reporting period. Financial statements are received for each fund and reviewed by the Company quarterly with audited financial statements received and reviewed on an annual basis. Fair value for these funds is measured using a practical expedient provided under GAAP that allows the NAV per share to be used as fair value for investments in certain entities that do not have readily determinable fair values and are considered to be investment companies. Investments valued using this practical expedient are not required to be presented within the GAAP fair value hierarchy.

Table of Contents

**TXNM ENERGY, INC. AND SUBSIDIARIES**
**PUBLIC SERVICE COMPANY OF NEW MEXICO AND SUBSIDIARIES**
**TEXAS-NEW MEXICO POWER COMPANY AND SUBSIDIARIES**

**NOTES TO CONDENSED CONSOLIDATED FINANCIAL STATEMENTS**
(Unaudited)

Items recorded at fair value by PNM on the Condensed Consolidated Balance Sheets are presented below by level of the fair value hierarchy along with gross unrealized gains on investments in available-for-sale debt securities:

| | | GAAP Fair Value Hierarchy | | |
|---|---|---|---|---|
| | Total | Quoted Prices in Active Markets for Identical Assets (Level 1) | Significant Other Observable Inputs (Level 2) | Unrealized Gains |
| | | (In thousands) | | |
| **June 30, 2025** | | | | |
| Cash and cash equivalents | $ 33,831 | $ 33,831 | $ — | |
| Equity securities: | | | | |
| Corporate stocks, common | 145,610 | 145,610 | — | |
| Mutual funds and other | 196,710 | 196,710 | — | |
| Available-for-sale debt securities: | | | | |
| U.S. government | 41,173 | 41,173 | — | $ 325 |
| Corporate and other | 9,347 | — | 9,347 | 165 |
| Investments categorized within the fair value hierarchy | $ 426,671 | $ 417,324 | $ 9,347 | $ 490 |
| Uncategorized collective investment trust | 43,442 | | | |
| Uncategorized real estate fund | 16,920 | | | |
| Total investment securities | $ 487,033 | | | |
| **December 31, 2024** | | | | |
| Cash and cash equivalents | $ 150,745 | $ 150,745 | $ — | |
| Equity securities: | | | | |
| Corporate stocks, common | 134,553 | 134,553 | — | |
| Mutual funds and other | 135,779 | 135,779 | — | |
| Available-for-sale debt securities: | | | | |
| U.S. government | 25,148 | 25,148 | — | $ 202 |
| Corporate and other | 7,196 | — | 7,196 | 122 |
| Investments categorized within the fair value hierarchy | $ 453,421 | $ 446,225 | $ 7,196 | $ 324 |
| Uncategorized collective investment trust | 22,103 | | | |
| Total investment securities | $ 475,524 | | | |

Table of Contents

**TXNM ENERGY, INC. AND SUBSIDIARIES**
**PUBLIC SERVICE COMPANY OF NEW MEXICO AND SUBSIDIARIES**
**TEXAS-NEW MEXICO POWER COMPANY AND SUBSIDIARIES**

**NOTES TO CONDENSED CONSOLIDATED FINANCIAL STATEMENTS**
(Unaudited)

The carrying amounts and fair values of long-term debt, all of which are considered Level 2 fair value measurements and are not recorded at fair value on the Condensed Consolidated Balance Sheets, are presented below:

| | Carrying Amount | Fair Value |
|---|---|---|
| **June 30, 2025** | (In thousands) | |
| TXNM | $ 5,199,237 | $ 5,231,061 |
| PNM | 2,846,402 | 2,719,072 |
| TNMP | 1,604,722 | 1,586,972 |
| **December 31, 2024** | | |
| TXNM | $ 4,923,368 | $ 4,706,076 |
| PNM | 2,459,592 | 2,284,362 |
| TNMP | 1,464,079 | 1,324,194 |

The carrying amount and fair value of the Company's other investments presented on the Condensed Consolidated Balance Sheets are not material and not shown in the above table.

**(8) Stock-Based Compensation**

TXNM has various stock-based compensation programs, which provide restricted stock awards, that are performance-based and time-based, under the PEP. Although certain PNM and TNMP employees are eligible to participate in the TXNM plans, PNM and TNMP do not have separate employee stock-based compensation plans. Performance stock awards granted under the PEP are awarded for a three-year, overlapping performance period. Performance stock awards with performance periods ending in 2024 and 2025 do not include market targets. Performance stock awards with performance periods ending after 2025 are subject to achieving both performance and market targets. Other awards of restricted stock are only subject to time-based vesting requirements. Additional information concerning stock-based compensation under the PEP is contained in Note 12 of the Notes to Consolidated Financial Statements in the 2024 Annual Reports on Form 10-K.

Restricted stock under the PEP refers to awards of stock subject to vesting, performance, or market conditions rather than to shares with contractual post-vesting restrictions. Generally, the awards vest ratably over three years from the grant date of the award. However, awards with performance or market conditions vest upon satisfaction of those conditions. In addition, plan provisions provide that upon retirement, participants become 100% vested in certain stock awards. The vesting period for awards of restricted stock to non-employee members of the Board is one-year.

The stock-based compensation expense related to restricted stock awards without performance or market conditions to participants that are retirement eligible on the grant date is recognized immediately at the grant date and is not amortized. Compensation expense for other such awards is amortized over the shorter of the requisite vesting period or the period until the participant becomes retirement eligible. Compensation expense for performance-based shares is recognized ratably over the performance period as required service is provided and is adjusted periodically to reflect the level of achievement expected to be attained. Compensation expense related to market-based shares is recognized ratably over the measurement period, regardless of the actual level of achievement, provided the employees meet their service requirements. At June 30, 2025, TXNM had unrecognized expense related to stock awards of $9.4 million, which is expected to be recognized over an average of 1.9 years.

The grant date fair value for restricted stock and stock awards with internal TXNM performance targets is determined based on the market price of TXNM common stock on the date of the agreements reduced by the present value of future dividends that will not be received prior to vesting. The grant date fair value is applied to the total number of shares that are anticipated to vest, although the number of performance shares that ultimately vest cannot be determined until after the performance periods end. The grant date fair value of stock awards with market targets were determined using Monte Carlo simulation models, which provide grant date fair values that include an expectation of the number of shares to vest at the end of the measurement period.

Table of Contents

**TXNM ENERGY, INC. AND SUBSIDIARIES**
**PUBLIC SERVICE COMPANY OF NEW MEXICO AND SUBSIDIARIES**
**TEXAS-NEW MEXICO POWER COMPANY AND SUBSIDIARIES**

**NOTES TO CONDENSED CONSOLIDATED FINANCIAL STATEMENTS**
(Unaudited)

The following table summarizes the weighted-average assumptions used to determine the awards grant date fair value:

| | Six Months Ended June 30, | |
|---|---|---|
| **Restricted Shares and Performance Based Shares** | **2025** | **2024** |
| Expected quarterly dividends per share | $ 0.4075 | $ 0.3875 |
| Risk-free interest rate | 4.00 % | 4.27 % |
| **Market-Based Shares** | | |
| Dividend yield | 3.12 % | 4.21% |
| Expected volatility | 15.67 % | 13.09% |
| Risk-free interest rate | 4.12 % | 4.31% |

The following table summarizes activity in restricted stock awards, including performance-based and market-based shares for the six months ended June 30, 2025:

| | Restricted Stock | |
|---|---|---|
| | **Shares** | **Weighted-Average Grant Date Fair Value** |
| **Outstanding at December 31, 2024** | 241,237 | $ 37.05 |
| Granted | 170,560 | 47.61 |
| Released | (156,284) | 40.79 |
| Forfeited | (4,343) | 34.92 |
| **Outstanding at June 30, 2025** | 251,170 | $ 41.93 |

Included, as granted and released, in the table above are 50,923 previously awarded performance-based shares that were earned for the 2022 - 2024 performance measurement period and ratified by the Board in February 2025 (based upon achieving targets at above “threshold,” below “target” levels). Also included, as granted and released, are 341 of other restricted stock awards for participants who retired and immediately vested. Excluded from the table above are 156,359, 252,375, and 214,085 shares for the three-year performance periods ending in 2025, 2026, and 2027 that will be awarded if all performance and market criteria are achieved at maximum levels and all executives remain eligible.

On December 4, 2023, the Company entered into a retention agreement with its President and Chief Operating Officer under which he would receive a retention bonus of $1.0 million to be paid in increments beginning in December 2023 and continuing each December until 2025. On April 8, 2024, pursuant to the retention agreement, the Board elected to convert the unvested portion of the retention bonus of $0.8 million into restricted stock rights whereby each share of restricted stock is equal to one share of Company common stock as of the first trading day after expiration of the then current black-out period. On May 3, 2024, subsequent to the expiration of the black-out period, 19,851 restricted stock rights were awarded that will vest in accordance with the original terms of the retention agreement.

On September 16, 2024, in connection with a one-time sign-on equity grant, the Company’s newly appointed General Counsel, Senior Vice President Regulatory and Public Policy, and Corporate Secretary was awarded 9,300 shares of restricted stock, of which 50% vested immediately and the remaining 50% will vest on the first anniversary of his start date, subject to continued employment through the vesting date.

The following table provides additional information concerning restricted stock activity, including performance-based and market-based shares:

| | Six Months Ended June 30, | |
|---|---|---|
| **Restricted Stock** | **2025** | **2024** |
| Weighted-average grant date fair value | $ 47.61 | $ 32.43 |
| Total fair value of restricted shares that vested (in thousands) | $ 6,374 | $ 6,180 |

Table of Contents

**TXNM ENERGY, INC. AND SUBSIDIARIES**
**PUBLIC SERVICE COMPANY OF NEW MEXICO AND SUBSIDIARIES**
**TEXAS-NEW MEXICO POWER COMPANY AND SUBSIDIARIES**

**NOTES TO CONDENSED CONSOLIDATED FINANCIAL STATEMENTS**
(Unaudited)

## (9) Financing

The Company's financing strategy includes both short-term and long-term borrowings. The Company utilizes short-term revolving credit facilities, as well as cash flows from operations, to provide funds for both construction and operating expenditures. Depending on market and other conditions, the Company will periodically sell long-term debt, enter into term loan arrangements, or equity arrangements and use the proceeds to reduce borrowings under the revolving credit facilities or refinance other debt. Each of the Company's revolving credit facilities, term loans, and other debt agreements contains a single financial covenant that requires the maintenance of a debt-to-capitalization ratio. For the TXNM agreements, this ratio must be maintained at less than or equal to 70%, and for the PNM and TNMP agreements, this ratio must be maintained at less than or equal to 65%. The Company's revolving credit facilities, term loans, and other debt agreements generally also contain customary covenants, events of default, cross-default provisions, and change-of-control provisions. PNM must obtain NMPRC approval for any financing transaction having a maturity of more than 18 months. In addition, PNM files its annual informational financing filing and short-term financing plan with the NMPRC. Additional information concerning financing activities is contained in Note 7 of the Notes to Consolidated Financial Statements in the 2024 Annual Reports on Form 10-K.

On February 28, 2025, TXNM filed a shelf registration that provides for the issuance of various types of debt and equity securities. The TXNM shelf registration statement expires in February 2028.

### Financing Activities

On July 31, 2025, PNM entered into an agreement (the "PNM July 2025 Note Purchase Agreement") with institutional investors for the sale and issuance of $350.0 million aggregate principal amount of two series of SUNs (the "PNM July 2025 SUNs") offered in private placement transactions. The PNM July 2025 SUNs were issued on July 31, 2025. PNM issued $200.0 million of the PNM July 2025 SUNs at 5.47%, due July 31, 2031, and another $150.0 million at 6.03%, due July 31, 2036. PNM used the proceeds from the PNM July 2025 SUNs to repay the PNM $250.0 million SUNs and for general corporate purposes. The PNM July 2025 Note Purchase Agreement includes the customary covenants discussed above. In the event of a change of control, PNM will be required to offer to prepay the PNM July 2025 SUNs at par. Although there are customary change of control provisions in the PNM debt agreements, the change of control provisions in the agreements, including the PNM July 2025 Note Purchase Agreement, will not be triggered by the closing of the Merger. PNM has the right to redeem any or all of the PNM July 2025 SUNs prior to their maturities, subject to payment of a customary make-whole premium. As PNM demonstrated the intent and ability to refinance the obligation due under the PNM $250.0 million SUNs prior to the issuance of this Form 10-Q, as of June 30, 2025 this has been presented as Long-term Debt on the Condensed Consolidated Balance Sheets.

On July 21, 2025, TNMP entered into an agreement (the "TNMP July 2025 Bond Purchase Agreement") with institutional investors for the sale of $1,084.3 million aggregate principal amount of six series of TNMP first mortgage bonds (the "TNMP July 2025 FMBs") offered in private placement transactions. TNMP issued the bonds on July 21, 2025 with the following terms:

| Principal Amount | Interest Rate | Due Date |
|---|---|---|
| (in thousands) | | |
| $ 245,000 | 4.83 % | July 31, 2030 |
| 245,000 | 5.12 | July 31, 2032 |
| 240,000 | 5.44 | July 31, 2035 |
| 100,000 | 5.54 | July 31, 2037 |
| 154,300 | 5.93 | July 31, 2045 |
| 100,000 | 6.02 | July 31, 2055 |
| $ 1,084,300 | | |

The proceeds were used to repay borrowings under the TNMP Merger Backstop Term Loan (defined below). The TNMP July 2025 FMBs are subject to continuing compliance with the representations, warranties, and covenants set forth in the governing supplemental indentures. In the event of certain changes of control of TNMP, TNMP will be required to offer to prepay the TNMP July 2025 FMBs at par. Although there are customary change of control provisions in the TNMP July 2025 FMBs, the change of control provisions will not be triggered by the closing of the Merger. TNMP has the right to redeem any or all of the TNMP July 2025 FMBs prior to their maturity, subject to payment of a customary make-whole premium.

Table of Contents

**TXNM ENERGY, INC. AND SUBSIDIARIES**
**PUBLIC SERVICE COMPANY OF NEW MEXICO AND SUBSIDIARIES**
**TEXAS-NEW MEXICO POWER COMPANY AND SUBSIDIARIES**

**NOTES TO CONDENSED CONSOLIDATED FINANCIAL STATEMENTS**
(Unaudited)

At June 30, 2025, TXNM had a series of treasury lock agreements, with terms ranging from 5 years to 30 years, aggregating a total notional amount of $730.0 million to reduce interest rate exposure on the TNMP July 2025 FMBs that were issued in July 2025. The treasury lock agreements had an average fixed rate of 4.18% and TXNM had designated them as cash flow hedges, measured at fair value, which was recorded as a loss of $2.5 million in Other current liabilities at June 30, 2025. Fair values, provided by an external pricing service, were determined using Level 2 inputs of quoted prices for similar agreements in active markets. On July 1, 2025, TXNM terminated all of the treasury lock agreements, realizing a pre-tax net loss of $1.6 million recorded in Accumulated other comprehensive income. The loss will be amortized through interest expense over a range of 5 to 30 years, in accordance with the terms of the TNMP July 2025 FMBs issued July 21, 2025.

On June 24, 2025, TXNM entered into an agreement (the “June 2025 Purchase Agreement”) whereby TXNM sold, in a private placement transaction, and the purchasers named therein agreed to purchase 3,615,003 shares of TXNM common stock for a purchase price of $55.325 per share (for an aggregate amount of approximately $200 million). The closing of the issuance occurred on June 27, 2025. TXNM used the proceeds to repay an equal amount under the TXNM 2023 Term Loan. TXNM has granted the purchasers customary registration rights with respect to the shares, pursuant to which TXNM is required to register such shares for resale with the SEC no later than five business days after TXNM files this Quarterly Report on Form 10-Q for the quarterly period ending June 30, 2025 (this “Form 10-Q”).

The documents governing an aggregate $1,505.0 million of TNMP’s outstanding FMBs ("TNMP FMBs") obligated TNMP to offer (“the Offer”), within 30 business days following the signing of the Merger Agreement, to prepay all outstanding TNMP FMBs at 100% of the principal amount, plus accrued and unpaid interest thereon, but without any make-whole amount or other premium. On June 14, 2025, the Offer expired and $1,084.3 million in aggregate principal amount of the bonds were validly tendered. TNMP accepted for purchase all validly tendered bonds. On June 24, 2025, holders whose bonds were validly tendered and accepted for purchase received 100% of the aggregate principal amount of bonds prepaid plus accrued and unpaid interest using funds drawn under the TNMP Merger Backstop Term Loan, discussed below. The documents governing the TNMP FMBs currently require TNMP to make another offer, within 30 business days of closing of the Merger, to prepay the remaining outstanding TNMP FMBs, totaling $420.7 million, at par. TNMP will make such offer to prepay the TNMP FMBs in accordance with the terms of the TNMP FMBs; however, holders of the TNMP FMBs are not required to tender their TNMP FMBs and may accept or reject such offer to prepay.

The information in this Form 10-Q is for informational purposes only and is neither an offer to purchase, nor a solicitation of an offer to sell, subscribe for or buy any securities in any jurisdiction pursuant to the proposed transactions or otherwise, nor shall there be any sale, issuance or transfer of securities in any jurisdiction in contravention of applicable law. Similar to the offer to prepay made after signing the Merger Agreement, the post-Merger closing offer to prepay the TNMP FMBs will be made only pursuant to an offer to prepay, which will set forth the terms and conditions of the offer to prepay.

On May 27, 2025, TXNM physically settled all shares under the TXNM 2024 ATM Program by issuing 1,104,641 shares to the forward purchasers, aggregating net proceeds of $49.6 million, including $0.5 million for equity issuance costs. TXNM used the proceeds from the settled shares to repay borrowings under the TXNM Revolving Credit Facility. Following this settlement, no additional shares of TXNM’s common stock remain subject to future settlement under the TXNM 2024 ATM Program.

On May 18, 2025, the execution of the Merger Agreement constituted a “Change of Control” under certain TXNM and TNMP debt agreements. Under each of the specified debt agreements, a “Change of Control” constitutes an “Event of Default,” pursuant to which the lender parties thereto had the right to accelerate the indebtedness under the debt agreements. The definition of Change of Control under the PNM debt agreements and PNM note purchase agreements are not triggered by the execution of the Merger Agreement.

On May 23, 2025, TXNM and TNMP entered into amendments in connection with the TXNM Revolving Credit Facility, TXNM 2023 Term Loan, WFB LOC Facility, and TNMP Revolving Credit Facility with the lender parties thereto (the “Lender Consents”) to (i) amend the definition of "Change of Control" in such agreements such that the entry into the Merger Agreement would not constitute a Change of Control and (ii) waive the Event of Default arising from entry into the Merger Agreement. The amended Change of Control definition under the TXNM and TNMP debt agreements will, however, be triggered again upon the closing of the Merger. Prior to the closing of the Merger, the Company intends to coordinate with the lenders to either (a) seek to amend the definition of Change of Control permitting the Merger; or (b) to refinance or enter into new debt agreements that would permit the Merger. The Change of Control provisions in the PNM debt agreements are not triggered by the close of the Merger.

Table of Contents

**TXNM ENERGY, INC. AND SUBSIDIARIES**
**PUBLIC SERVICE COMPANY OF NEW MEXICO AND SUBSIDIARIES**
**TEXAS-NEW MEXICO POWER COMPANY AND SUBSIDIARIES**

**NOTES TO CONDENSED CONSOLIDATED FINANCIAL STATEMENTS**
(Unaudited)

To ensure sufficient liquidity pending the Lender Consents, on May 18, 2025, TXNM entered into a $910.0 million 364-day revolving credit facility (the "TXNM Merger Backstop Revolving Facility") between TXNM, the lenders party thereto, and Wells Fargo Bank, National Association, as administrative agent. The TXNM Merger Backstop Revolving Facility was available to provide liquidity in the event the Company was unable to obtain the Lender Consents. On May 19, 2025, TXNM borrowed approximately $4.0 million under the TXNM Merger Backstop Revolving Facility and subsequently repaid the entire balance by May 21, 2025. The TXNM Merger Backstop Revolving Facility expired according to its terms as TXNM did not make any additional borrowings thereunder by the commitment termination date of May 23, 2025, and the Company was able to obtain the Lender Consents.

On May 18, 2025, concurrent with the execution of the TXNM Merger Backstop Revolving Facility, TNMP entered into a $1,505.0 million 364-day delayed-draw term loan (the "TNMP Merger Backstop Term Loan") between TNMP, the lenders party thereto, and Wells Fargo Bank, National Association, as administrative agent. The TNMP Merger Backstop Term Loan was available to provide liquidity to repurchase TNMP's FMBs that were tendered for prepayment pursuant to the Offer. Borrowings under the TNMP Merger Backstop Term Loan are short-term in nature, and bear interest at a variable rate, which was 5.42% at June 30, 2025. On July 21, 2025 TNMP issued the TNMP July 2025 FMBs and used the proceeds to repay the outstanding principal balance under the TNMP Merger Backstop Term Loan on July 22, 2025, terminating that agreement. As TNMP demonstrated the intent and ability to refinance this short-term obligation prior to the issuance of this Form 10-Q, the obligation that existed as of June 30, 2025 has been presented as Long-term Debt on the Condensed Consolidated Balance Sheets.

On May 18, 2025, concurrent with the execution of the Merger Agreement, TXNM entered into an agreement (the "May 2025 Stock Purchase Agreement") whereby TXNM sold, in a private placement transaction, 8,000,000 shares of TXNM common stock for a purchase price of $50.00 per share (aggregating $400.0 million). The consummation of the May 2025 Stock Purchase Agreement occurred on June 2, 2025. TXNM used the proceeds to make a cash equity contribution of $160.0 million to TNMP, to repay borrowings under the TXNM Revolving Credit Facility, and for general corporate purposes.

On May 16, 2025, TXNM paid the remaining balance due under its TXNM 2021 Delayed Draw Term Loan in accordance with its terms.

On April 23, 2025, PNM entered into an agreement (the "PNM April 2025 Note Purchase Agreement") with institutional investors for the sale and issuance of $300.0 million aggregate principal amount of two series of SUNs (the "PNM April 2025 SUNs") offered in private placement transactions. The PNM April 2025 SUNs were issued on April 23, 2025. PNM issued $125.0 million of the PNM April 2025 SUNs at 5.75%, due June 1, 2032, and another $175.0 million at 6.13%, due June 1, 2037. PNM used proceeds from the PNM April 2025 SUNs for the repayment of existing indebtedness, funding of capital expenditures, and general corporate purposes. The PNM April 2025 Note Purchase Agreement includes the customary covenants discussed above. In the event of a change of control, PNM will be required to offer to prepay the PNM April 2025 SUNs at par. Although there are customary change of control provisions in the PNM debt agreements, the change of control provisions in the agreements, including the PNM April 2025 Note Purchase Agreement, are not triggered by the closing of the Merger. PNM has the right to redeem any or all of the PNM April 2025 SUNs prior to their maturities, subject to payment of a customary make-whole premium.

On February 14, 2025, TNMP entered into an agreement (the "TNMP February 2025 Bond Purchase Agreement") with institutional investors for the sale and issuance of $140.0 million aggregate principal amount of first mortgage bonds (the "TNMP February 2025 Bonds") offered in private placement transactions. TNMP issued all $140.0 million of the TNMP February 2025 Bonds on February 14, 2025 at a 5.19% interest rate, due April 1, 2031. The proceeds were used to repay borrowings under the TNMP Revolving Credit Facility, for funding of capital expenditures, and for other corporate purposes. The TNMP February 2025 Bonds are subject to continuing compliance with the representations, warranties, and covenants set forth in the supplemental indentures governing the TNMP February 2025 Bonds. The terms of the supplemental indentures governing the TNMP February 2025 Bonds include the customary covenants discussed above. In the event of a change of control, TNMP will be required to offer to prepay the TNMP February 2025 Bonds at par. The definition of change of control in the supplemental indentures governing the TNMP February 2025 Bonds were triggered by the execution of the Merger Agreement and the TNMP February 2025 Bonds were included in the Offer, with $40.0 million validly tendered by the bondholders and accepted for purchase by TNMP. The change of control for the remaining $100.0 million of TNMP February 2025 Bonds will again be triggered by the close of the Merger. TNMP has the right to redeem any or all of the TNMP February 2025 Bonds prior to their maturity, subject to payment of a customary make-whole premium.

Table of Contents

**TXNM ENERGY, INC. AND SUBSIDIARIES**
**PUBLIC SERVICE COMPANY OF NEW MEXICO AND SUBSIDIARIES**
**TEXAS-NEW MEXICO POWER COMPANY AND SUBSIDIARIES**

**NOTES TO CONDENSED CONSOLIDATED FINANCIAL STATEMENTS**
(Unaudited)

On January 21, 2025, PNM entered into a $195.0 million term loan agreement (the "PNM 2025 Term Loan"), among PNM, the lenders party thereto and Canadian Imperial Bank of Commerce, New York Branch, as administrative agent. PNM used the proceeds of the PNM 2025 Term Loan to repay borrowings under the PNM Revolving Credit Facility and the PNM New Mexico Credit Facility, and for general corporate purposes. The PNM 2025 Term Loan bears interest at a variable rate, which was 5.32% at June 30, 2025, and must be repaid on or before July 21, 2026.

On May 6, 2024, TXNM entered into a distribution agreement with BofA Securities, Inc., Citigroup Global Markets, Inc., MUFG Securities Americas Inc., RBC Capital Markets, LLC, Scotia Capital (USA) Inc., and Wells Fargo Securities, LLC, as sales agents and Bank of America, N.A., Citibank, N.A., MUFG Securities EMEA plc, Royal Bank of Canada, The Bank of Nova Scotia, and Wells Fargo Bank, N.A., as forward purchasers, pursuant to which the Company may sell, from time to time, up to an aggregate sales amount of $100.0 million of its common stock, no par value, through the sales agents (the "TXNM 2024 ATM Program"). On August 5, 2024, subsequent to approval by shareholders to increase TXNM's authorized shares, the Company amended the distribution agreement increasing the aggregate sales amount from $100.0 million to $300.0 million of its common stock, no par value, that may be sold under the TXNM 2024 ATM Program. The Company did not initially receive any proceeds from the execution of the distribution agreement.

During the second quarter of 2024, TXNM entered into a forward sale agreement with a forward purchaser for the sale of 262,025 shares of common stock under the TXNM 2024 ATM Program (the "Q2 2024 Forward Sale Agreement") with an initial forward sale price of $37.77 per share. TXNM physically settled these shares on December 30, 2024.

On May 10, 2024, PNM entered into a $200.0 million term loan agreement (the "PNM 2024 Term Loan"), among PNM, the lenders party thereto and U.S. Bank National Association, as administrative agent. PNM used the proceeds of the PNM 2024 Term Loan to repay borrowings under the PNM Revolving Credit Facility, the PNM New Mexico Credit Facility, and for general corporate purposes. The PNM 2024 Term Loan bears interest at a variable rate, which was 5.32% at June 30, 2025, and must be repaid on or before November 10, 2025.

On June 10, 2024, TXNM issued $500.0 million aggregate principal amount of junior subordinated convertible notes due 2054 (the "Convertible Notes") in a private offering to qualified institutional buyers pursuant to Rule 144A under the Securities Act. The Convertible Notes are unsecured obligations of the Company and rank junior and subordinate in right of payment to the prior payment in full of the Company's existing and future senior indebtedness. The Convertible Notes bear interest at a rate of 5.75% per year, payable semi-annually in arrears on June 1 and December 1, and mature on June 1, 2054, unless earlier converted, redeemed, or repurchased in accordance with their terms. On June 21, 2024, TXNM issued an additional $50.0 million aggregate principal amount of the Convertible Notes, pursuant to an overallotment option granted by TXNM to the initial purchasers of the $500.0 million Convertible Notes. Proceeds from the Convertible Notes were used to prepay $449.0 million of borrowings under the TXNM 2021 Delayed Draw Term Loan and $90.0 million of borrowings under the TXNM 2023 Term Loan, without penalty, and for other corporate purposes.

At December 31, 2023, PNM had outstanding $37.0 million of 3.00% PCRBs and $125.0 million of 1.15% PCRBs issued by the City of Farmington, New Mexico with a mandatory remarketing date of June 1, 2024 and final maturities of June 2040 and $36.0 million of 3.00% PCRBs issued by Maricopa County, Arizona with a mandatory remarketing date of June 1, 2024 and a final maturity of January 2038. On June 3, 2024, PNM remarketed these PCRBs aggregating $198.0 million to new investors at 3.875% with a mandatory tender date of June 1, 2029.

On March 28, 2024, TNMP entered into the TNMP 2024 Bond Purchase Agreement with institutional investors for the sale of $285.0 million aggregate principal amount of four series of the TNMP 2024 Bonds offered in private placement transactions. TNMP issued the first two series on March 28, 2024, consisting of $32.0 million at a 5.26% interest rate, due March 28, 2029, and $85.0 million at a 5.55% interest rate, due March 28, 2036. The third and fourth series were issued on July 1, 2024, consisting of $40.0 million at a 5.65% interest rate, due July 1, 2039, and $128.0 million at a 5.79% interest rate, due July 1, 2054. The proceeds were used to repay existing debt, including the $80.0 million of 4.03% TNMP FMBs that were due July 2024 and borrowings under the TNMP Revolving Credit Facility, for funding of capital expenditures, and for other corporate purposes. The TNMP 2024 Bonds are subject to continuing compliance with the representations, warranties, and covenants set forth in the supplemental indentures governing the TNMP 2024 Bonds. The terms of the supplemental indentures governing the TNMP 2024 Bonds include the customary covenants discussed above. In the event of certain changes of control of TXNM or TNMP, TNMP will be required to offer to prepay the TNMP 2024 Bonds at par. The definition of change of control in the supplemental indentures governing the TNMP 2024 Bonds were triggered by the execution of the Merger Agreement and the TNMP 2024 Bonds were included in the Offer, with $125.0 million validly tendered by the bondholders and accepted for purchase by TNMP. The change of control for the remaining $160.0 million of TNMP 2024 Bonds will again be

Table of Contents

**TXNM ENERGY, INC. AND SUBSIDIARIES**
**PUBLIC SERVICE COMPANY OF NEW MEXICO AND SUBSIDIARIES**
**TEXAS-NEW MEXICO POWER COMPANY AND SUBSIDIARIES**

**NOTES TO CONDENSED CONSOLIDATED FINANCIAL STATEMENTS**
(Unaudited)

triggered by the close of the Merger. TNMP has the right to redeem any or all of the TNMP 2024 Bonds prior to their maturity, subject to payment of a customary make-whole premium.

At June 30, 2025, variable interest rates were 5.78% on the TXNM 2023 Term Loan that matures in June 2026, 5.32% on the PNM 2024 Term Loan that matures in November 2025, and 5.32% on the PNM 2025 Term Loan that matures in July 2026.

**Short-term Debt and Liquidity**

As of June 30, 2025, the TXNM Revolving Credit Facility had a financing capacity of $300.0 million and the PNM Revolving Credit Facility had a financing capacity of $400.0 million. Each of these facilities matures on March 30, 2029 and contains two one-year extension options that, if exercised, would extend the maturity to March 2031, subject to approval by a majority of the lenders. PNM also has the $40.0 million PNM New Mexico Credit Facility with a maturity of May 20, 2026. On July 25, 2025, PNM amended its PNM New Mexico Credit Facility to, among other things, extend the maturity to May 31, 2030. As of June 30, 2025, the TNMP Revolving Credit Facility has a capacity of $200.0 million and is secured by $200.0 million aggregate principal amount of TNMP first mortgage bonds and has a maturity of March 30, 2029, with two one-year extension options that, if exercised, would extend the maturity to March 2031, subject to approval by a majority of the lenders. Variable interest rates under the TXNM, PNM, and TNMP revolving credit facilities are based on SOFR. Short-term debt outstanding consists of:

| | June 30, 2025 | | December 31, 2024 | |
|---|---|---|---|---|
| | Balance Outstanding | Weighted Average Interest Rate | Balance Outstanding | Weighted Average Interest Rate |
| | (In thousands) | | (In thousands) | |
| PNM: | | | | |
| PNM Revolving Credit Facility | $ 194,600 | 5.66% | $ 323,800 | 5.73% |
| PNM New Mexico Credit Facility | 40,000 | 5.67 | 40,000 | 5.81 |
| | 234,600 | | 363,800 | |
| TNMP Revolving Credit Facility | — | — | 151,600 | 5.37 |
| TXNM Revolving Credit Facility | 111,100 | 5.92 | 93,900 | 5.96 |
| | $ 345,700 | | $ 609,300 | |

In addition to the above borrowings, TXNM, PNM, and TNMP had letters of credit outstanding of $3.1 million, zero, and zero at June 30, 2025 that reduce the available capacity under their respective revolving credit facilities. TXNM also had $30.3 million of letters of credit outstanding under the WFB LOC Facility. The above table excludes intercompany debt. As of June 30, 2025 and December 31, 2024, PNM had no intercompany borrowings from TXNM. TNMP had no intercompany borrowings from TXNM as of June 30, 2025 and December 31, 2024. TXNM had $1.6 million and $1.5 million in short-term borrowings from PNMR Development at June 30, 2025 and December 31, 2024.

PNM has $3.5 million and $3.6 million in scheduled principal payments due for the ETBC I Securitized Bonds in August 2025 and February 2026. PNM also has $200.0 million under the PNM 2024 Term Loan due in November 2025 and $195.0 million under the PNM 2025 Term Loan due in July 2026. TXNM has $210.0 million under the TXNM 2023 Term Loan due in June 2026. The Company's debt arrangements have various maturities and expiration dates. Additional information on debt maturities is contained in Note 7 of the Notes to Consolidated Financial Statements in the 2024 Annual Reports on Form 10-K.

**(10) Pension and Other Postretirement Benefit Plans**

TXNM and its subsidiaries maintain qualified defined benefit pension plans, postretirement benefit plans providing medical and dental benefits, and executive retirement programs (collectively, the "PNM Plans" and "TNMP Plans"). TXNM maintains the legal obligation for the benefits owed to participants under these plans. The periodic costs or income of the PNM Plans and TNMP Plans are included in regulated rates to the extent attributable to regulated operations. The Company presents the service cost component of its net periodic benefit costs in administrative and general expenses and the non-service costs components in other income (deductions), net of amounts capitalized or deferred to regulatory assets and liabilities, on the Condensed Consolidated Statements of Earnings. PNM and TNMP receive a regulated return on the amounts funded for

Table of Contents

**TXNM ENERGY, INC. AND SUBSIDIARIES**
**PUBLIC SERVICE COMPANY OF NEW MEXICO AND SUBSIDIARIES**
**TEXAS-NEW MEXICO POWER COMPANY AND SUBSIDIARIES**

**NOTES TO CONDENSED CONSOLIDATED FINANCIAL STATEMENTS**
(Unaudited)

pension and OPEB plans in excess of accumulated periodic cost or income to the extent included in retail rates (a "prepaid pension asset").

Additional information concerning pension and OPEB plans is contained in Note 11 of the Notes to Consolidated Financial Statements in the 2024 Annual Reports on Form 10-K. Annual net periodic benefit cost for the plans is actuarially determined using the methods and assumptions set forth in that note and is recognized ratably throughout the year. Differences between TNMP's annual net periodic costs (income) and amounts included in its regulated rates are deferred to regulatory assets or liabilities, for recovery or refund in future rate proceedings.

**PNM Plans**

The following table presents the components of the PNM Plans' net periodic benefit cost:

| | Three Months Ended June 30, | | | | | |
|---|---|---|---|---|---|---|
| | Pension Plan | | OPEB Plan | | Executive Retirement Program | |
| | 2025 | 2024 | 2025 | 2024 | 2025 | 2024 |
| | (In thousands) | | | | | |
| **Components of Net Periodic Benefit Cost** | | | | | | |
| Service cost | $ — | $ — | $ — | $ — | $ — | $ — |
| Interest cost | 5,385 | 5,428 | 566 | 597 | 122 | 124 |
| Expected return on plan assets | (7,459) | (7,757) | (1,384) | (1,391) | — | — |
| Amortization of net loss | 3,124 | 2,662 | — | — | 47 | 50 |
| Amortization of prior service cost | — | — | — | — | — | — |
| **Net Periodic Benefit Cost (Income)** | $ 1,050 | $ 333 | $ (818) | $ (794) | $ 169 | $ 174 |

| | Six Months Ended June 30, | | | | | |
|---|---|---|---|---|---|---|
| | Pension Plan | | OPEB Plan | | Executive Retirement Program | |
| | 2025 | 2024 | 2025 | 2024 | 2025 | 2024 |
| | (In thousands) | | | | | |
| **Components of Net Periodic Benefit Cost** | | | | | | |
| Service cost | $ — | $ — | $ — | $ — | $ — | $ — |
| Interest cost | 10,770 | 10,855 | 1,133 | 1,194 | 244 | 248 |
| Expected return on plan assets | (14,917) | (15,514) | (2,768) | (2,782) | — | — |
| Amortization of net loss | 6,247 | 5,323 | — | — | 94 | 100 |
| Amortization of prior service cost | — | — | — | — | — | — |
| **Net Periodic Benefit Cost (Income)** | $ 2,100 | $ 664 | $ (1,635) | $ (1,588) | $ 338 | $ 348 |

PNM did not make any contributions to its pension plan trust in the three and six months ended June 30, 2025 and 2024 and does not anticipate making any contributions to the pension plan in 2025 through 2028, but PNM does expect to make a cash contribution of $7.9 million in 2029 based on current law, funding requirements, and estimates of portfolio performance. Funding assumptions were developed using a discount rate of 5.31% in 2025 declining to a rate of approximately 5.03% in 2027 and later years. Actual amounts to be funded in the future will be dependent on the actuarial assumptions at that time, including the appropriate discount rate. PNM may make additional contributions at its discretion. PNM did not make any cash contributions to the OPEB trust in the three and six months ended June 30, 2025 and 2024, however, a portion of the disbursements attributable to the OPEB trust is paid by PNM and are therefore considered to be contributions to the OPEB plan. Payments by PNM on behalf of the PNM OPEB plan were $0.1 million for the three and six months ended June 30, 2025 and less than 0.1 million and 0.1 million for the three and six months ended June 30, 2024. These payments are expected to total $2.0 million in 2025 and $11.1 million for 2026-2029. Disbursements under the executive retirement program, which are funded by PNM and considered to be contributions to the plan, were $0.2 million and $0.6 million in the three and six months ended June 30, 2025 and $0.3 million and $0.6 million in the three and six months ended June 30, 2024 and are expected to total $1.2 million during 2025 and $4.2 million for 2026-2029.

Table of Contents

**TXNM ENERGY, INC. AND SUBSIDIARIES**
**PUBLIC SERVICE COMPANY OF NEW MEXICO AND SUBSIDIARIES**
**TEXAS-NEW MEXICO POWER COMPANY AND SUBSIDIARIES**

**NOTES TO CONDENSED CONSOLIDATED FINANCIAL STATEMENTS**
(Unaudited)

**TNMP Plans**

The following table presents the components of the TNMP Plans' net periodic benefit cost:

| | Three Months Ended June 30, | | | |
|---|---|---|---|---|
| | Pension Plan | | OPEB Plan | |
| | 2025 | 2024 | 2025 | 2024 |
| | (In thousands) | | | |
| **Components of Net Periodic Benefit Cost** | | | | |
| Service cost | $ — | $ — | $ 4 | $ 6 |
| Interest cost | 536 | 554 | 93 | 97 |
| Expected return on plan assets | (733) | (687) | (120) | (128) |
| Amortization of net (gain) loss | 168 | 139 | (124) | (160) |
| Amortization of prior service cost | — | — | — | — |
| **Net Periodic Benefit Cost (Income)** | $ (29) | $ 6 | $ (147) | $ (185) |

| | Six Months Ended June 30, | | | |
|---|---|---|---|---|
| | Pension Plan | | OPEB Plan | |
| | 2025 | 2024 | 2025 | 2024 |
| | (In thousands) | | | |
| **Components of Net Periodic Benefit Cost** | | | | |
| Service cost | $ — | $ — | $ 8 | $ 11 |
| Interest cost | 1,072 | 1,107 | 186 | 193 |
| Expected return on plan assets | (1,466) | (1,374) | (240) | (257) |
| Amortization of net (gain) loss | 336 | 278 | (248) | (321) |
| Amortization of prior service cost | — | — | — | — |
| **Net Periodic Benefit Cost (Income)** | $ (58) | $ 11 | $ (294) | $ (374) |

TNMP did not make any contributions to its pension plan trust in the three and six months ended June 30, 2025 and 2024 and does not anticipate making any contributions to the pension plan in 2025 through 2029 based on current law, funding requirements, and estimates of portfolio performance. Funding assumptions were developed using a discount rate of 5.32% in 2025 declining to a rate of approximately 5.05% in 2027 and later years. Actual amounts to be funded in the future will depend on the actuarial assumptions at that time, including the appropriate discount rate. TNMP may make additional contributions at its discretion. TNMP did not make any contributions to the OPEB trust in the three and six months ended June 30, 2025 and 2024 and does not expect to make contributions to the OPEB trust during the period 2025-2029.

**(11) Commitments and Contingencies**

**Merger-Related Litigation**

Counsel for TXNM has received a number of demand letters from certain law firms on behalf of individuals who are purported TXNM shareholders, accompanied by draft complaints naming TXNM and its directors as defendants and alleging that TXNM's preliminary proxy statement with respect to the Merger omitted or misrepresented certain material information. Such draft complaints include a request for injunctive relief with respect to the TXNM shareholder vote to approve, and the closing of, the Merger, as well as other remedies, including counsel fees. TXNM believes that the allegations set forth in the demand letters and draft complaints are without merit and, if such complaints are actually filed, will defend such actions vigorously.

Table of Contents

**TXNM ENERGY, INC. AND SUBSIDIARIES**
**PUBLIC SERVICE COMPANY OF NEW MEXICO AND SUBSIDIARIES**
**TEXAS-NEW MEXICO POWER COMPANY AND SUBSIDIARIES**

**NOTES TO CONDENSED CONSOLIDATED FINANCIAL STATEMENTS**
(Unaudited)

***Overview***

There are various claims and lawsuits pending against the Company. In addition, the Company is subject to federal, state, and local environmental laws and regulations and periodically participates in the investigation and remediation of various sites. In addition, the Company periodically enters into financial commitments in connection with its business operations. Also, the Company is involved in various legal and regulatory proceedings in the normal course of its business. See Note 12. It is not possible at this time for the Company to determine fully the effect of all litigation and other legal and regulatory proceedings on its financial position, results of operations, or cash flows.

With respect to some of the items listed below, the Company has determined that a loss is not probable or that, to the extent probable, cannot be reasonably estimated. In some cases, the Company is not able to predict with any degree of certainty the range of possible loss that could be incurred. The Company assesses legal and regulatory matters based on current information and makes judgments concerning their potential outcome, giving due consideration to the nature of the claim, the amount and nature of any damages sought, and the probability of success. Such judgments are made with the understanding that the outcome of any litigation, investigation, or other legal proceeding is inherently uncertain. The Company records liabilities for matters where it is probable a loss has been incurred and the amount of loss is reasonably estimatable. The actual outcomes of the items listed below could ultimately differ from the judgments made and the differences could be material. The Company cannot make any assurances that the amount of reserves or potential insurance coverage will be sufficient to cover the cash obligations that might be incurred as a result of litigation or regulatory proceedings. Except as otherwise disclosed, the Company does not expect that any known lawsuits, environmental costs, or commitments will have a material effect on its financial condition, results of operations, or cash flows.

Additional information concerning commitments and contingencies is contained in Note 16 of the Notes to Consolidated Financial Statements in the 2024 Annual Reports on Form 10-K.

***Commitments and Contingencies Related to the Environment***

**Nuclear Spent Fuel and Waste Disposal**

Nuclear power plant operators are required to enter into spent fuel disposal contracts with the DOE that require the DOE to accept and dispose of all spent nuclear fuel and other high-level radioactive wastes generated by domestic power reactors. Although the Nuclear Waste Policy Act required the DOE to develop a permanent repository for the storage and disposal of spent nuclear fuel by 1998, the DOE announced that it would not be able to open the repository by 1998 and sought to excuse its performance of these requirements. In November 1997, the DC Circuit issued a decision preventing the DOE from excusing its own delay but refused to order the DOE to begin accepting spent nuclear fuel. Based on this decision and the DOE's delay, a number of utilities, including APS (on behalf of itself and the other PVNGS owners, including PNM), filed damages actions against the DOE in the Court of Federal Claims. The lawsuits filed by APS alleged that damages were incurred due to DOE's continuing failure to remove spent nuclear fuel and high-level waste from PVNGS. APS and the DOE entered into a settlement agreement, subsequently extended, that established a process for the payment of claims for costs incurred through December 31, 2025. Under the settlement agreement, APS must submit claims annually for payment of allowable costs. PNM records estimated claims on a quarterly basis. The benefit from the claims is passed through to customers under the FPPAC.

PNM estimates that it will incur approximately $55.6 million (in 2023 dollars) for its share of the costs related to the on-site interim storage of spent nuclear fuel at PVNGS for the remaining term of the operating licenses. PNM accrues these costs as a component of fuel expense as the nuclear fuel is consumed. At June 30, 2025 and December 31, 2024, PNM had a liability for interim storage costs of $14.6 million and $13.4 million, which is included in other deferred credits.

PVNGS has sufficient capacity at its on-site Independent Spent Fuel Storage Installation ("ISFSI") to store all of the nuclear fuel that will be irradiated during the initial operating license period, which ends in December 2027. Additionally, PVNGS has sufficient capacity at its on-site ISFSI to store a portion of the fuel that will be irradiated during the period of extended operation, which ends in November 2047. If uncertainties regarding the U.S. Government's obligation to accept and store spent fuel are not favorably resolved, APS will evaluate alternative storage solutions that may obviate the need to expand the ISFSI to accommodate all of the fuel that will be irradiated during the period of extended operation.

Table of Contents

**TXNM ENERGY, INC. AND SUBSIDIARIES**
**PUBLIC SERVICE COMPANY OF NEW MEXICO AND SUBSIDIARIES**
**TEXAS-NEW MEXICO POWER COMPANY AND SUBSIDIARIES**

**NOTES TO CONDENSED CONSOLIDATED FINANCIAL STATEMENTS**
(Unaudited)

**The New Mexico Energy Transition Act**

The New Mexico Energy Transition Act ("ETA") sets a statewide standard that requires investor-owned electric utilities to have specified percentages of their electric-generating portfolios be from renewable and zero-carbon generating resources. The ETA requires utilities operating in New Mexico to have renewable portfolios equal to 40% by 2025, 50% by 2030, 80% by 2040, and 100% zero-carbon energy by 2045. The ETA also allows for the recovery of undepreciated investments and decommissioning costs related to qualifying EGUs that the NMPRC has required be removed from retail jurisdictional rates, provided replacement resources to be included in retail rates have lower or zero-carbon emissions. The ETA requires the NMPRC to review and approve utilities' annual renewable portfolio plans to ensure compliance with the RPS. Also pursuant to the ETA, the NM Environmental Improvement Board adopted standards of performance that limit $CO_2$ emissions to no more than 1,100 lbs. per MWh beginning January 1, 2023 for new and existing coal-fired EGUs with original installed capacities exceeding 300 MW.

The ETA provides for a transition from fossil-fuel generation resources to renewable and other carbon-free resources through certain provisions relating to the abandonment of coal-fired generating facilities. These provisions include the use of energy transition bonds to finance certain costs of abandoning coal-fired facilities that are retired prior to January 1, 2023 for facilities operated by a "qualifying utility," or prior to January 1, 2032 for facilities that are not operated by a qualifying utility. The amount of energy transition bonds that can be issued to recover abandonment costs is limited to the lesser of $375.0 million or 150% of the undepreciated investment of the facility as of the abandonment date. Proceeds provided by energy transition bonds must be used only for purposes related to providing utility service to customers and to pay energy transition costs (as defined by the ETA). These costs may include plant decommissioning and coal mine reclamation costs provided those costs have not previously been recovered from customers or disallowed by the NMPRC or by a court order. Proceeds from energy transition bonds may also be used to fund severances for employees of the retired facility and related coal mine and to promote economic development, education and job training in areas impacted by the retirement of the coal-fired facilities. Energy transition bonds must be issued under a NMPRC-approved financing order, are secured by "energy transition property," are non-recourse to the issuing utility, and are repaid by a non-bypassable charge paid by all customers of the issuing utility. These customer charges are subject to an adjustment mechanism designed to provide for timely and complete payment of principal and interest due under the energy transition bonds.

The ETA also provides that utilities must obtain NMPRC approval of competitively procured replacement resources that shall be evaluated based on their cost, economic development opportunity, ability to provide jobs with comparable pay and benefits to those lost upon retirement of the facility, and that do not exceed emissions thresholds specified in the ETA. In determining whether to approve replacement resources, the NMPRC must give preference to resources with the least environmental impacts, those with higher ratios of capital costs to fuel costs, and those located in the school district of the abandoned facility. The ETA also provides for the procurement of energy storage facilities and gives utilities discretion to maintain, control, and operate these systems to ensure reliable and efficient service.

The ETA has had and will have a significant impact on PNM's future generation portfolio, including PNM's retirement of SJGS in 2022. PNM cannot predict the full impact of the ETA with respect to Four Corners or the outcome of its future generating resource abandonment and replacement resource filings with the NMPRC.

**The Clean Air Act**

*Regional Haze*

Pursuant to the CAA, states are required to establish goals for improving visibility in national parks and wilderness areas (also known as Class I areas) and to develop long-term strategies for reducing emissions of air pollutants that cause visibility impairment in their own states and for preventing degradation in other states. States must establish a series of interim goals to ensure continued progress by adopting a new SIP every ten years. In the first SIP planning period, states were required to conduct best available retrofit technology determinations for certain covered facilities, including utility boilers, built between 1962 and 1977 that have the potential to emit more than 250 tons per year of visibility impairing pollution. For all future SIP planning periods, states must evaluate whether additional emissions reduction measures may be needed to continue making reasonable progress toward natural visibility conditions.

SIPs for the second planning period were due in July 2021, which deadline NMED was unable to meet. NMED is currently preparing its SIP for the second compliance period and has notified PNM that it will not be required to submit a regional haze four-factor analysis for SJGS since PNM retired its share of SJGS in 2022. On August 30, 2022, EPA published in the Federal Register an official "Finding of Failure to Submit" for states, including New Mexico, that have not yet submitted

Table of Contents

**TXNM ENERGY, INC. AND SUBSIDIARIES**
**PUBLIC SERVICE COMPANY OF NEW MEXICO AND SUBSIDIARIES**
**TEXAS-NEW MEXICO POWER COMPANY AND SUBSIDIARIES**

**NOTES TO CONDENSED CONSOLIDATED FINANCIAL STATEMENTS**
(Unaudited)

a round 2 regional haze SIP. This action by EPA started a two-year clock for it to issue a FIP, which deadline has now passed. NMED petitioned the NM Environmental Improvement Board to adopt a proposed SIP and submitted a final revised plan to the NM Environmental Improvement Board on March 3, 2025. PNM submitted comments on the proposed SIP in response to a request for comments by NMED. On March 12, 2025, as part of EPA's list of 31 deregulatory actions, EPA announced it would restructure the Regional Haze Program. The NM Environmental Improvement Board held a public hearing from April 28 to April 30, 2025 and is expected to deliberate and deliver a final rule during its regular meeting on October 24, 2025.

*Carbon Dioxide Emissions*

In 2015, EPA established standards to limit $CO_2$ emissions from power plants, including (1) Carbon Pollution Standards for new, modified, and reconstructed power plants; and (2) the Clean Power Plan for existing power plants. Challengers successfully petitioned the U.S. Supreme Court for a stay of the Clean Power Plan. In 2019, EPA repealed the Clean Power Plan, promulgated the ACE Rule, and revised the implementing regulations for all emission guidelines. The ACE Rule was also challenged, and on January 19, 2021, the DC Circuit issued an opinion in American Lung Association and American Public Health Association v. EPA, et al., vacating the ACE Rule.

Numerous parties sought review by the U.S. Supreme Court, and on June 30, 2022, the U.S. Supreme Court held that the "generation shifting" approach in the Clean Power Plan exceeded the powers granted to EPA by Congress. Of broader significance in administrative law, the Court's opinion expressly invoked the "major question" doctrine, which requires rules involving issues of "vast economic or political significance" to be supported by clear statutory authorization. In cases where there is no clear statement of authority, courts need not defer to the agency's statutory interpretation on "major questions." The decision sets legal precedent for future rulemakings by EPA and other federal regulatory agencies whereby the agencies' authority may be limited based upon similar reasoning.

The litigation over the Carbon Pollution Standards remains held in abeyance but could be reactivated by the parties upon a determination by the court that reconsideration of the rule has concluded.

In 2024, EPA adopted regulatory actions under CAA Sections 111(b) and (d) to replace the Clean Power Plan and the ACE Rule. The final rules include revised new source performance standards under Section 111(b) for all new natural gas-fired combustion turbines and emission guidelines under Section 111(d) requiring states to develop standards of performance for GHG emissions from existing fossil-fuel-fired electric steam generating units. In the final rules, EPA determined that the standards for existing coal- or gas-fired steam generating units must be based on the use of either CCS (long-term), natural gas co-firing (medium-term), or exempt from the rule via early retirement. The standards for new combustion turbines must be based on CCS (base load), efficient simple cycle design (intermediate load), or lower-emitting fuels (low load). Over a dozen states, several industry groups and some power companies and labor unions filed challenges to the rule at the DC Circuit, which heard oral arguments on December 6, 2024. However, President Trump issued several executive orders on January 20, 2025, directing his Administration to review all agency actions and suspend, revise, or rescind those identified as imposing an undue burden on domestic energy resources. On March 12, 2025, as part of EPA's reconsideration of 31 environmental regulations, EPA announced the agency will reconsider the previous Administration's regulations on GHG standards and guidelines for power plants. On June 17, 2025, EPA published a two-part proposed rule in the Federal Register to repeal and revise the GHG emission standards for EGUs. EPA primarily proposes to find that GHG emissions from fossil fuel-fired power plants "do not contribute significantly to dangerous air pollution" under the meaning of CAA Section 111, which would preclude EPA from regulating GHG emissions from those plants. As a result, EPA is proposing to repeal all GHG standards for the power sector promulgated under CAA Section 111 in both 2015 and 2024. EPA also proposed, in the alternative, to find that CCS is not adequately demonstrated and that neither CCS nor gas co-firing are the best system of emission reduction for GHG emissions from power plants, which findings also support repeal of those specific requirements from the rules adopted in 2024. Comments are due by August 7, 2025 and EPA has indicated it intends to finalize the proposed rule by the end of 2025.

Because the CAA 111 rule does not contain provisions for existing natural gas units, on March 26, 2024, EPA announced it was opening a non-regulatory docket and issued framing questions to gather input about ways to design a stronger, more durable approach to GHG regulation of existing gas combustion turbines. The docket was open for public comment from March 26, 2024 to May 28, 2024 and the agency held a policy forum to bring stakeholders together to share ideas with EPA and others. Under the Trump Administration, EPA is unlikely to propose a rule based on this non-regulatory docket.

In 2021, President Biden signed an extensive executive order aimed at addressing climate change concerns domestically and internationally. The order was intended to build on the initial climate-related actions the Biden Administration took on

Table of Contents

**TXNM ENERGY, INC. AND SUBSIDIARIES**
**PUBLIC SERVICE COMPANY OF NEW MEXICO AND SUBSIDIARIES**
**TEXAS-NEW MEXICO POWER COMPANY AND SUBSIDIARIES**

**NOTES TO CONDENSED CONSOLIDATED FINANCIAL STATEMENTS**
(Unaudited)

January 20, 2021. It addressed a wide range of issues, including establishing climate change concerns as an essential element of U.S. foreign and security policy, identifying a process to determine the U.S. INDC under the Paris Agreement, and establishing a Special Presidential Envoy for Climate that would sit on the National Security Council. On April 22, 2021, at the Earth Day Summit, as part of the U.S.'s re-entry into the Paris Agreement, President Biden unveiled the goal to cut U.S. emissions by 50% - 52% from 2005 levels by 2030, nearly double the GHG emissions reduction target set by the Obama Administration. The 2030 goal joined President Biden's other climate goals which included a carbon pollution-free power sector by 2035 and a net-zero emissions economy by no later than 2050. In an executive order issued on January 20, 2025, President Trump ordered his Administration to withdraw the U.S. from the Paris Agreement and from any agreement, pact, accord, or similar commitment made under the United Nations Framework Convention on Climate Change.

PNM's review of the GHG emission reductions standards that have or may occur as a result of legislation or regulation is ongoing. We are currently determining what impact, if any, the final rules will have on our business, results of operations, and financial condition.

*National Ambient Air Quality Standards ("NAAQS")*

The CAA requires EPA to set NAAQS for pollutants reasonably anticipated to endanger public health or welfare. EPA has set NAAQS for certain pollutants, including NOx, $SO_2$, ozone, and particulate matter.

*NOx Standard* – In 2018, EPA published the final rule to retain the current primary health-based NOx standards of which $NO_2$ is the constituent of greatest concern and is the indicator for the primary NAAQS. EPA concluded that the current 1-hour and annual primary $NO_2$ standards are requisite to protect public health with an adequate margin of safety. The rule became effective on May 18, 2018. The State of New Mexico has attained the current NOx NAAQS standards.

*$SO_2$ Standard* – In 2019, EPA announced its final decision to retain, without changes, the primary health-based NAAQS for $SO_2$. Specifically, EPA retained the current 1-hour standard for $SO_2$, which is 75 parts per billion, based on the 3-year average of the 99th percentile of daily maximum 1-hour $SO_2$ concentrations. In 2021, EPA published in the Federal Register the initial air quality designations for all remaining areas not yet designated under the 2010 $SO_2$ Primary NAAQS. All areas of New Mexico have been designated attainment/unclassifiable through four rounds of designations by EPA.

*Ozone Standard* – In 2015, EPA finalized the new ozone NAAQS and lowered both the primary and secondary 8-hour standard from 75 to 70 parts per billion. With ozone standards becoming more stringent, fossil-fueled generation units will come under increasing pressure to reduce emissions of NOx and volatile organic compounds since these are the pollutants that form ground-level ozone. During 2017 and 2018, EPA released rules establishing area designations for ozone. In those rules, San Juan County, New Mexico, where Four Corners is located, is designated as attainment/unclassifiable and only a small area in Doña Ana County, New Mexico is designated as marginal non-attainment. Although Afton Generating Station is located in Doña Ana County, it is not located within the small area designated as non-attainment for the 2015 ozone standard.

PNM does not believe there will be material impacts to its facilities because of the non-attainment designation of the small area within Doña Ana County. Until EPA approves attainment designations for the Navajo Nation and releases a proposal to implement the revised ozone NAAQS, PNM is unable to predict what impact the adoption of these standards may have on Four Corners. On July 13, 2020, EPA proposed to retain the existing ozone NAAQS based on a review of the full body of currently available scientific evidence and exposure/risk information, but on August 21, 2023, EPA announced an entirely new review of the ozone standard. PNM cannot predict the outcome of this matter.

In 2019, EPA issued findings that several states, including New Mexico, had failed to submit interstate transport SIPs for the 2015 8-hour ozone NAAQS, triggering an obligation for EPA to issue a FIP within two years. In response, NMED submitted a Good Neighbor SIP on July 27, 2021 that demonstrates that there are no significant contributions from New Mexico to downwind problems in meeting the federal ozone standard. On March 15, 2023, EPA Administrator Regan signed a final action imposing a FIP on multiple states but did not include a FIP for New Mexico because the most updated modeling available at the time of the proposal confirmed the state did not contribute to downwind ozone nonattainment or maintenance areas. However, the updated modeling EPA used in the final rule indicated that New Mexico may be significantly contributing to one or more non-attainment or maintenance areas. In light of that modeling result, on February 16, 2024, the EPA published a proposed rule partially disapproving the SIPs for New Mexico and four other states (Arizona, Iowa, Kansas, and Tennessee) and expanding the Good Neighbor FIP to apply to these states. The FIP aspect of the proposed rule would have required fossil fuel-fired power plants in these five states to participate in an allowance-based ozone season NOx emissions trading program beginning in 2025, but the outgoing Biden Administration did not finalize the rule. On March 10, 2025, in the DC Circuit, the

Table of Contents

**TXNM ENERGY, INC. AND SUBSIDIARIES**
**PUBLIC SERVICE COMPANY OF NEW MEXICO AND SUBSIDIARIES**
**TEXAS-NEW MEXICO POWER COMPANY AND SUBSIDIARIES**

**NOTES TO CONDENSED CONSOLIDATED FINANCIAL STATEMENTS**
(Unaudited)

EPA filed a motion for voluntary remand of its ozone interstate transport FIP for the 2015 ozone NAAQS to reconsider the rule and anticipates completing a new rulemaking by Fall 2026. The FIP is listed for reconsideration under the EPA's March 2025 list of deregulatory actions.

*PM Standard* – In 2023, EPA published, in the Federal Register, a proposal to lower the annual fine PM standard to between 9-10 µg/m3 but retain the rest of its PM standards, including the current daily fine PM standard, the daily coarse PM standard, and the secondary PM standards. The final rule was published on March 6, 2024, lowering the primary annual PM 2.5 NAAQS to 9 ug/m3, and became effective May 6, 2024. States will have until March 2032 to attain compliance with the new standard. During the multi-year implementation process, EPA will designate attainment/nonattainment areas by March 6, 2026, and states will submit a SIP to EPA by September 6, 2027. This implementation process also applies to the Albuquerque-Bernalillo County Environmental Health Department who may combine efforts with NMED. Bernalillo County does not currently meet the 9 ug/m3 standard which may impact future air permitting activities at Rio Bravo and Reeves Generating Stations if the county is designated as nonattainment. However, even before any designations are made, the new standard is effective for conducting required modeling for permit applications and revisions. The lower standard is expected to result in new nonattainment areas throughout the country and could prompt additional PM control requirements, but PNM cannot predict the impacts of the outcome of future rulemaking. The March 2024 rule is listed for reconsideration under EPA's March 2025 list of deregulatory actions.

**Cooling Water Intake Structures**

In 2014, EPA issued a rule establishing national standards for certain cooling water intake structures at existing power plants and other facilities under the Clean Water Act to protect fish and other aquatic organisms by minimizing impingement mortality (the capture of aquatic wildlife on intake structures or against screens) and entrainment mortality (the capture of fish or shellfish in water flow entering and passing through intake structures).

To minimize impingement mortality, the rule provides operators of facilities, such as Four Corners, seven options for meeting Best Technology Available ("BTA") standards for reducing impingement. The permitting authority must establish the BTA for entrainment on a site-specific basis, taking into consideration an array of factors, including endangered species and social costs and benefits. Affected sources must submit source water baseline characterization data to the permitting authority to assist in the BTA determination. Compliance deadlines under the rule are tied to permit renewals, including any subject to a schedule of compliance established by the permitting authority in the permit itself.

In 2018, several environmental groups sued EPA Region IX in the U.S. Court of Appeals for the Ninth Circuit over EPA's failure to timely reissue the Four Corners NPDES permit. The petitioners asked the court to issue a *writ of mandamus* compelling EPA Region IX to take final action on the pending NPDES permit by a reasonable date. EPA subsequently reissued the NPDES permit. The permit did not contain conditions related to the cooling water intake structure rule, because EPA determined that the facility had achieved BTA for both impingement and entrainment by operating a closed-cycle recirculation system. Several environmental groups filed a petition for review with EPA's Environmental Appeals Board ("EAB") concerning the reissued permit. The environmental groups alleged that the permit was reissued in contravention of the Clean Water Act and did not contain limits or conditions required by EPA's ELG applicable to Four Corners or EPA's cooling water intake structures rule, among others. EPA withdrew the Four Corners NPDES permit in order to examine the issues raised by the environmental groups and then issued an updated NPDES permit in 2019. The permit was once again appealed to the EAB and was stayed before the effective date, but the EAB issued an order denying the petition for review on September 30, 2020. Thereafter, the Regional Administrator of the EPA signed a notice of final permit decision, and the NPDES permit was issued on November 9, 2020. The permit became effective December 1, 2020. On January 22, 2021, the environmental groups filed a petition for review of the EAB's decision with the U.S. Court of Appeals for the Ninth Circuit. The September 2019 permit remained in effect pending the outcome of this appeal. On March 21, 2022, EPA provided notice in the Federal Register of a proposed settlement agreement with the environmental groups. The parties subsequently executed the settlement agreement as of May 2, 2022. Under the settlement, the lawsuit was administratively closed through September 6, 2023, during which time a third-party consultant spent 12 months sampling discharges from Four Corners and EPA spent three months completing an analysis. On December 1, 2023, EPA issued a modification, effective December 31, 2023, to the NPDES permit that had been issued on November 9, 2020. The modification applies to permit elements related to effluent discharge. PNM cannot predict whether the analysis required to be performed by EPA under the settlement agreement will result in further changes to the NPDES permit but does not anticipate that it will have a material impact on PNM's financial position, results of operations, or cash flows.

Table of Contents

**TXNM ENERGY, INC. AND SUBSIDIARIES**
**PUBLIC SERVICE COMPANY OF NEW MEXICO AND SUBSIDIARIES**
**TEXAS-NEW MEXICO POWER COMPANY AND SUBSIDIARIES**

**NOTES TO CONDENSED CONSOLIDATED FINANCIAL STATEMENTS**
(Unaudited)

**Effluent Limitation Guidelines**

In 2013, EPA published proposed revised wastewater ELG establishing technology-based wastewater discharge limitations for fossil fuel-fired electric power plants. EPA signed the final Steam Electric ELG rule in 2015. The final rule, which became effective on January 4, 2016, phased in the new, more stringent requirements in the form of effluent limits for arsenic, mercury, selenium, and nitrogen for wastewater discharged from wet scrubber systems and zero discharge of pollutants in ash transport water that must be incorporated into plants' NPDES permits. The 2015 rule required each plant to comply between 2018 and 2023 depending on when it needed a new or revised NPDES permit.

The Steam Electric ELG rule was challenged in the U.S. Court of Appeals for the Fifth Circuit by numerous parties. In 2017, EPA signed a notice indicating its intent to reconsider portions of the rule, and the Fifth Circuit issued an order severing the issues under reconsideration and holding the case in abeyance as to those issues. However, the court allowed challenges to other portions of the rule to proceed. In 2019, the Fifth Circuit granted those challenges and issued an opinion vacating several portions of the rule, specifically those related to legacy wastewater and leachate, for which the court deemed the standards selected by EPA arbitrary and capricious.

In 2017, EPA published a final rule for postponement of certain compliance dates. The rule postponed the earliest date on which compliance with the ELG for these waste streams would be required from November 1, 2018 until November 1, 2020. In 2019, EPA published a proposed rule revising the original ELG while maintaining the compliance dates. In 2020, EPA published in the Federal Register the final Steam Electric ELG and Standards for the Steam Electric Power Generating Point Source Category, revising the final 2015 guidelines for both flue gas desulfurization wastewater and bottom ash transport water. The 2020 rule required compliance with new limits as soon as possible on or after October 13, 2021, but no later than December 31, 2025.

In 2021, EPA published notice that it would undertake a supplemental rulemaking to revise the ELG after completing its review of the rules reconsidered in 2020. As part of this process, EPA committed to determine whether more stringent limitations and standards would be appropriate. On March 29, 2023, EPA published the proposed ELG Rule in the Federal Register. The proposed rule included stricter limitations for wastewater discharges for coal-fired facilities, but allowed for flexibilities for those coal-powered facilities that would soon decommission or repower. With this proposed rule EPA extended the date of decommissioning or repowering from December 31, 2028, to December 31, 2032.

On May 9, 2024, EPA published a final rule to further revise the ELG. This final supplemental rule updated the technology-based limitations applicable to flue gas desulfurization wastewater, bottom ash transport water, and legacy wastewater at existing sources, as well as combustion residual leachate at new and existing sources. The 2024 rule was challenged in the U.S. Court of Appeals for the Eighth Circuit, but the court denied motions for a stay, so the rule remains in effect. On March 12, 2025, EPA announced it would reconsider the ELGs for the steam electric power generating industry.

Reeves Station discharges cooling tower blowdown to a publicly owned treatment plant and no longer holds an NPDES permit; therefore, it is expected that no ELG requirements will be imposed.

See "Cooling Water Intake Structures" above for additional discussion of Four Corners' current NPDES permit. Four Corners may be required to change equipment and operating practices affecting boilers and ash handling systems, as well as change its waste disposal techniques during the next NPDES permit renewal. PNM is unable to predict the outcome of these matters or a range of the potential costs of compliance.

**Santa Fe Generating Station**

PNM and NMED are parties to agreements under which PNM has installed a remediation system to treat water from a City of Santa Fe municipal supply well and an extraction well to address gasoline contamination in the groundwater at the site of PNM's former Santa Fe Generating Station and service center. A 2008 NMED site inspection report states that neither the source nor extent of contamination at the site has been determined and that the source may not be the former Santa Fe Generating Station. During 2013 and 2014, PNM and NMED collected additional samples that showed elevated concentrations of nitrate and volatile organic compounds in some of the monitoring wells at the site. In addition, one monitoring well contained free-phase hydrocarbon products. PNM collected a sample of the product for "fingerprint" analysis. The results of this analysis indicated the product was a mixture of older and newer fuels. The presence of newer fuels in the sample suggests the hydrocarbon product likely originated from off-site sources. In 2015, PNM and NMED entered into a memorandum of understanding to address changing groundwater conditions at the site under which PNM agreed to continue hydrocarbon investigation under the supervision of NMED. Qualified costs are eligible for payment through the New Mexico Corrective

Table of Contents

**TXNM ENERGY, INC. AND SUBSIDIARIES**
**PUBLIC SERVICE COMPANY OF NEW MEXICO AND SUBSIDIARIES**
**TEXAS-NEW MEXICO POWER COMPANY AND SUBSIDIARIES**

**NOTES TO CONDENSED CONSOLIDATED FINANCIAL STATEMENTS**
(Unaudited)

Action Fund ("CAF"), which is administered by the NMED Petroleum Storage Tank Bureau. In 2019, PNM received notice from NMED that an abatement plan for the site is required to address concentrations of previously identified compounds, unrelated to those discussed above, found in the groundwater. NMED approved PNM's abatement plan proposal, which covers field work and reporting.

Field work related to the investigation under both the CAF and abatement plan requirements was completed and activities and findings associated with the field work were presented in two separate reports and released to stakeholders in early 2020. Subsequent field work was completed in July 2020 and two reports were released supporting PNM's contention that off-site sources have impacted, and are continuing to impact, the local groundwater in the vicinity of the former Santa Fe Generating Station.

In 2021, NMED approved both the field work plans required for site characterization and associated work activities which were completed by the end of 2022 and a report was submitted to NMED in 2023. Groundwater sampling for the abatement plan's first semiannual work was completed in 2023, and the associated report was completed and submitted to NMED. In addition, the work plan for the 2023 CAF work was completed and submitted to NMED in July 2023. NMED approved this work plan in December 2023. The activities from the work plan include the installation of three monitoring wells which were completed in December 2024. A report summarizing the well installation is under preparation. Site wide sampling will take place in 2025, with reports provided to NMED.

The City of Santa Fe has stopped operating its well at the site, which is needed for PNM's groundwater remediation system to operate. As a result, PNM has stopped performing remediation activities at the site. However, PNM's monitoring and other abatement activities at the site are ongoing and will continue until the groundwater meets applicable federal and state standards or until NMED determines that remediation is not required, whichever is earlier. PNM is not able to assess the duration of this project or estimate the impact on its obligations if PNM is required to resume groundwater remediation activities at the site. PNM is unable to predict the outcome of these matters.

**Coal Combustion Residuals Waste Disposal**

CCRs consisting of fly ash, bottom ash, and gypsum generated from coal combustion and emission control equipment at SJGS have been disposed of in the surface mine pits adjacent to the plant. SJGS does not operate any onsite CCR impoundments or landfills. The NMMMD currently regulates mine reclamation activities at the San Juan mine, including placement of CCRs in the surface mine pits, with federal oversight by the OSM. APS disposes of CCRs in onsite ponds and dry storage areas at Four Corners. Ash management at Four Corners is regulated by EPA and the New Mexico State Engineer's Office.

EPA's 2015 coal ash rule included a non-hazardous waste determination for coal ash and sets minimum criteria for existing and new CCR landfills and surface impoundments. In 2016, the Water Infrastructure Improvements for the Nation Act (the "WIIN Act") was signed into law to address critical water infrastructure needs in the U.S. and contained a number of provisions related to CCRs. Among other things, the WIIN Act allowed, but did not require, states to develop and submit CCR permit programs for EPA approval, provided flexibility for states to incorporate EPA's 2015 rule for CCRs or develop other criteria that are at least as protective as EPA's rule, and required EPA to approve state permit programs within 180 days of submission by the state. Because states are not required to implement their own CCR permit programs, EPA was required to develop a federal permit program in states that chose not to implement a program, subject to congressional funding. Until state or federal permit programs are in effect, the 2015 rule continues to be self-implementing in nature, subject to enforcement by EPA or citizen groups. For facilities located within the boundaries of Native American reservations, such as the Navajo Nation where Four Corners is located, EPA is required to develop a federal permit program regardless of appropriated funds.

In 2018, EPA published a rule that constitutes "Phase One, Part One" of its ongoing reconsideration and revision of the 2015 CCR rule. The final Phase One, Part One rule extended the deadline to allow EGUs with unlined impoundments or that fail to meet the uppermost aquifer requirement to continue to receive coal ash until October 31, 2020, which was again extended by subsequent amendments. The rule also authorized a "Participating State Director" or EPA to approve suspension of groundwater monitoring requirements and to issue certifications related to the location restrictions, design criteria, groundwater monitoring, remedy selection and implementation. The rule also modified groundwater protection standards for certain constituents, which include cobalt, molybdenum, lithium, and lead without a maximum contamination level.

In 2019, EPA published a second round of proposed revisions, which are commonly referred to as the "Phase Two" revisions, to address reporting and accessibility to public information, "CCR piles" and "beneficial use" definitions, and the

Table of Contents

**TXNM ENERGY, INC. AND SUBSIDIARIES**
**PUBLIC SERVICE COMPANY OF NEW MEXICO AND SUBSIDIARIES**
**TEXAS-NEW MEXICO POWER COMPANY AND SUBSIDIARIES**

**NOTES TO CONDENSED CONSOLIDATED FINANCIAL STATEMENTS**
(Unaudited)

requirements for management of CCR piles. EPA reopened and extended the Phase Two comment period several times. To date, EPA has not yet finalized provisions in Phase Two related to beneficial use of CCR and CCR piles.

Since its Phase Two proposal, EPA has finalized three other rules addressing various CCR rule provisions. In 2020, EPA promulgated its proposed Holistic Approach to Closure Part A ("Part A"), which proposed a new deadline of August 31, 2020, for companies to initiate closure of unlined CCR impoundments. In accordance with the DC Circuit's vacatur of portions of the 2015 CCR Rule, Part A also changed the classification of compacted soil-lined or clay-lined surface impoundments from "lined" to "unlined", triggering closure or retrofit requirements for those impoundments. In addition, Part A delineated a process for owners/operators to submit requests for alternative closure deadlines based on lack of alternate disposal capacity and gave operators of unlined impoundments until April 11, 2021 to cease receipt of waste at these units and initiate closure.

EPA also issued the Holistic Approach to Closure Part B ("Part B") in 2020, which delineated the process for owners/operators to submit alternate liner demonstrations for clay-lined surface impoundments that could otherwise meet applicable requirements. This rule did not include beneficial use of CCR for closure, which EPA explained would be addressed in subsequent rulemaking actions. On May 18, 2023, EPA published a proposed rule on the regulatory requirements for inactive surface impoundments at inactive facilities and a new category of regulated unit called a CCR management unit ("CCRMU"), including groundwater monitoring, corrective action, closure, and post-closure care requirements for all CCR management units (regardless of how or when that CCR was placed), and several technical corrections to the existing regulations. Comments on the proposed rule were due July 17, 2023.

On May 8, 2024, EPA published a final rule that extended federal CCR regulatory requirements to (1) inactive CCR surface impoundments at inactive utilities and (2) CCRMU (Legacy Rule), including CCR impoundments and landfills that closed prior to the effective date of the 2015 CCR rule, inactive CCR landfills, and other areas where CCR was managed directly on the land. The rule became effective on November 8, 2024. EPA included deferral options for smaller CCRMU containing between one and 1,000 tons of CCR, CCRMU located beneath critical infrastructure or large buildings or structures vital to the continuation of current site activities, and CCRMU that closed prior to the effective date of the new rule (subject to certain eligibility conditions). EPA also codified the controversial definitions of infiltration and liquids that were litigated in the DC Circuit. Six petitions for review of the Legacy Rule were filed and were consolidated into one case by the DC Circuit. The Utility Solid Waste Activities Group, of which TXNM is a member, is a petitioner jointly with the National Rural Electric Cooperative Association, and American Public Power Association. The U.S. Supreme Court denied a requested stay of the rule by East Kentucky Power Cooperative. The DC Circuit has agreed to hold the case in abeyance until August 11, 2025. On July 17, 2025, EPA announced a direct final rule and companion proposal revising the compliance deadlines for CCRMU requirements under the Legacy Rule.

As of the effective date of the rule, one CCRMU was identified at SJGS. SJGS is required, at a minimum, to conduct a two-part evaluation of historic and current CCRMUs with reporting due dates of February 9, 2026, and February 8, 2027 (or not later than February 8, 2027 for both under EPA's most recent regulatory actions), with each report posted to a company website by the due date.

At this time, PNM is still evaluating the financial impacts of this final regulation for Four Corners. Initial CCRMU site surveys and final site investigation reports expected to be finalized by February 2027. Based on the information available to the Company at this time, PNM cannot reasonably estimate the fair value of the entire CCRMU ARO. PNM cannot predict the outcome of the CCRMU site evaluations and investigations, or how these outcomes might affect the associated costs, which might have a material impact on PNM's operations, financial position, or cash flows.

In 2020, EPA published a proposed rule establishing a federal permitting program for the handling of CCR within the boundaries of Native American reservations and in states without their own federally authorized state programs. Permits for units within the boundaries of Native American reservations would be due 18 months after the effective date of the rule. EPA projected finalizing the rule in October 2024 but still has not submitted a final version to the Office of Management and Budget ("OMB"). Given the change in administration, it is not clear whether or when EPA will finalize the rule. EPA has coordinated with the affected permits for the three facilities with CCR disposal units located on Native American lands. PNM cannot predict the outcome of EPA's rulemaking activity or the outcome of any related litigation, and whether or how such a ruling would affect operations at Four Corners.

EPA's CCR rule does not cover mine placement of coal ash. In the preamble to its 2015 rule, EPA explained that the OSM and, as necessary, EPA would address the management of CCR in mine fills in a separate regulatory action, recognizing OSM's expertise in this area. EPA's decision to defer to OSM was based on a recommendation from the National Academy of

Table of Contents

**TXNM ENERGY, INC. AND SUBSIDIARIES**
**PUBLIC SERVICE COMPANY OF NEW MEXICO AND SUBSIDIARIES**
**TEXAS-NEW MEXICO POWER COMPANY AND SUBSIDIARIES**

**NOTES TO CONDENSED CONSOLIDATED FINANCIAL STATEMENTS**
(Unaudited)

Sciences ("NAS"), which was commissioned by Congress in 2006 to investigate the health, safety and environmental risks associated with the use of CCR for mine reclamation. The NRC report recommended that enforceable federal standards be established for the disposal of CCR in mine fills to ensure that states have specific authority and that states implement adequate safeguards. In 2007, OSM published an advance notice of proposed rulemaking on the placement of CCR at mine sites. In that notice, OSM explained its intent to develop the proposed regulations based on its existing authority under the Surface Mining Control and Reclamation Act. Since 2007, however, OSM has not taken any further action to advance this rulemaking. PNM cannot predict the outcome of OSM's proposed rulemaking regarding CCR regulation, including mine placement of CCRs, or whether OSM's actions will have a material impact on PNM's operations, financial position, or cash flows.

As noted above, SJGS does not operate any onsite CCR impoundments or landfills that are regulated under the 2015 CCR rule, and as of November 8, 2024, identified only one CCRMU that would be regulated under the Legacy Rule. That CCRMU has since been removed from that unit and PNM will conduct the requisite site investigation reports. PNM would seek recovery from its retail customers of all CCR costs for jurisdictional assets that are ultimately incurred.

Utilities that own or operate CCR disposal units, such as those at Four Corners, as indicated above, were required to collect sufficient groundwater sampling data to initiate a detection monitoring program. Four Corners completed the analysis for its CCR disposal units, which identified several units that needed corrective action or needed to cease operations and initiate closure by April 11, 2021. Work is ongoing. Four Corners continues to gather additional groundwater data and perform remedial evaluations and activities. At this time, PNM does not anticipate its share of the cost to complete these corrective actions to close the CCR disposal units, or to gather and perform remedial evaluations on groundwater at Four Corners, will have a significant impact on its operations, financial position, or cash flows.

***Other Commitments and Contingencies***

**Coal Supply**

*Four Corners*

APS purchases all of Four Corners' coal requirements from NTEC, an entity owned by the Navajo Nation, under the Four Corners CSA that expires in 2031. The coal comes from reserves located within the Navajo Nation. The contract provides for pricing adjustments over its term based on economic indices and certain minimum payments that may be required if no deliveries of coal are taken. PNM's share of the coal costs is being recovered through the FPPAC. See additional discussion of the Four Corners CSA in Note 17 of the Notes to Consolidated Financial Statements in the 2024 Annual Reports on Form 10-K.

*Coal Mine Reclamation*

As indicated under Coal Combustion Residuals Waste Disposal above, SJGS disposed of CCRs in the surface mine pits adjacent to the plant and Four Corners disposes of CCRs in ponds and dry storage areas.

PNM and the other SJGS owners are obligated to compensate WSJ LLC for all reclamation costs associated with the supply of coal from the San Juan mine. PNM and Westmoreland have entered into an agreement under which mine reclamation services for SJGS would be provided. A mine reclamation cost study was completed in the first quarter of 2024 and PNM remeasured its liability, which resulted in an increase in overall reclamation costs of $20.9 million, due primarily to higher inflationary factors. As a result, PNM recorded the increase in the liability related to the underground mine of $17.0 million as a regulatory asset on the Condensed Consolidated Balance Sheets. Due to the NMPRC cap on the amount that can be collected from retail customers for final reclamation of the surface mines at $100.0 million, PNM was required to record $4.0 million of the increase related to the surface mine liability plus an additional $0.5 million, related to other costs, as a regulatory disallowance on the Condensed Consolidated Statements of Earnings for the six months ended June 30, 2024.

PNM's estimate of the costs necessary to reclaim the mine that serves SJGS is subject to many assumptions, including the timing of reclamation, generally accepted practices at the time reclamation activities occur, and current inflation and discount rates. PNM cannot predict the ultimate cost to reclaim the mine that serves SJGS and would seek to recover all costs related to reclaiming the underground mine from its customers but could be exposed to additional loss related to surface mine reclamation. In connection with certain mining permits relating to the operation of the San Juan mine, Westmoreland was required to post reclamation bonds of $118.7 million with the NMMMD. In order to facilitate the posting of reclamation bonds by sureties on behalf of Westmoreland, TXNM entered into the WFB LOC Facility under which letters of credit aggregating $30.3 million have been issued.

Table of Contents

**TXNM ENERGY, INC. AND SUBSIDIARIES**
**PUBLIC SERVICE COMPANY OF NEW MEXICO AND SUBSIDIARIES**
**TEXAS-NEW MEXICO POWER COMPANY AND SUBSIDIARIES**

**NOTES TO CONDENSED CONSOLIDATED FINANCIAL STATEMENTS**
(Unaudited)

A coal mine reclamation study for the surface mine that serves Four Corners was completed in December 2024. The study reflected operation of the mine through 2031, the term of the Four Corners CSA. PNM remeasured its liability, which resulted in a decrease in overall reclamation costs of $1.6 million, due primarily to lower overhead costs, contractor management costs, and taxes and royalties. Due to the NMPRC cap on the amount that can be collected from retail customers for final reclamation of the surface mines at $100.0 million, PNM recorded the decrease related to the surface mine liability as a regulatory disallowance on the Consolidated Statements of Earnings for the year ended December 31, 2024.

Based on the most recent estimates, PNM's remaining payments as of June 30, 2025 for mine reclamation, in future dollars, are estimated to be $41.1 million for the surface mines at both SJGS and Four Corners and $62.7 million for the underground mine at SJGS. At June 30, 2025 and December 31, 2024, liabilities, in current dollars, of $29.6 million and $38.3 million for surface mine reclamation and $54.1 million and $52.9 million for underground mine reclamation were recorded in other deferred credits.

The SJGS owners are parties to a reclamation trust funds agreement to provide financial assurance for post-term coal mine reclamation obligations. The trust funds agreement requires each owner to enter into an individual trust agreement with a financial institution as trustee, create an irrevocable reclamation trust, and meet year-end funding targets set by funding curves that are approved by the SJGS ownership. PNM began using its mine reclamation trust to pay for final mine reclamation costs in April 2023. Because the trust agreement requires meeting specific funding targets at year end, it may be necessary for PNM to make additional contributions to meet those targets. PNM funded $27.3 million in 2024. Based on PNM's reclamation trust fund balance at June 30, 2025, current forecasts, and current funding curve targets, PNM anticipates contributing $1.6 million in 2025, $1.0 million in 2026, and $0.4 million in 2027.

Under the Four Corners CSA, PNM is required to fund its share of estimated final reclamation costs in annual installments into an irrevocable escrow account solely dedicated to the final reclamation cost of the surface mine at Four Corners. PNM contributed $3.2 million in 2024 and anticipates providing additional funding of $0.5 million per year for 2025, 2026 and 2027.

PNM recovers from retail customers reclamation costs associated with the underground mine. However, the NMPRC capped the amount collected from retail customers for final reclamation of the surface mines at $100.0 million for both SJGS and Four Corners. If future estimates increase the liability for surface mine reclamation, the excess would be expensed at that time. The impacts of changes in New Mexico state law as a result of the enactment of the ETA and regulatory determinations made by the NMPRC may also affect PNM's financial position, results of operations, and cash flows. PNM is currently unable to determine the outcome of these matters or the range of possible impacts.

**SJGS Decommissioning**

On November 9, 2021, the San Juan County Commission approved the Coal-Fired Electricity Generating Facility Demolition and Remediation Ordinance ("Ordinance 121"), requiring the full demolition of SJGS upon its complete and permanent closure. Ordinance 121 required the SJGS owners to submit a proposed demolition and remediation plan no later than three months after SJGS was retired. The SJGS owners submitted the decommissioning and remediation plan on December 28, 2022. In connection with restructuring of the SJGS ownership on December 31, 2017, PNM and the other SJGS owners entered into the San Juan Decommissioning and Trust Funds Agreement, which requires PNM to fund its ownership share of final decommissioning costs into an irrevocable trust. Under the agreement, PNM made an initial funding of $14.7 million in December 2022 and made an additional contribution of $7.0 million in 2024. The amount and timing of additional trust funding is subject to revised decommissioning cost studies and agreement among the SJGS owners. PNM began using its decommissioning trust to pay for demolition and decommissioning costs in October 2023. PNM has posted a surety bond in the amount of $46.0 million in connection with certain environmental decommissioning obligations and must maintain the bond or other financial assurance until those obligations are satisfied. The surety bond only represents a liability if the SJGS owners fail to deliver on its contractual liability.

PNM records its share of the SJGS decommissioning obligation as an ARO on its Condensed Consolidated Balance Sheets. Studies on the decommissioning costs of SJGS are performed periodically and revisions to the ARO liability are recorded. In the third quarter of 2022, a new decommissioning cost study was completed, which required PNM to remeasure its SJGS decommissioning ARO. The new study resulted in an estimated decrease to PNM's share of the decommissioning obligation of $21.1 million, which was recorded in September 2022.

Table of Contents

**TXNM ENERGY, INC. AND SUBSIDIARIES**
**PUBLIC SERVICE COMPANY OF NEW MEXICO AND SUBSIDIARIES**
**TEXAS-NEW MEXICO POWER COMPANY AND SUBSIDIARIES**

**NOTES TO CONDENSED CONSOLIDATED FINANCIAL STATEMENTS**
(Unaudited)

On July 29 2025, PNM received a letter from the NMED indicating that the NMED designated PNM as a responsible party and requiring a Stage 1 Abatement Plan ("S1AP") proposal for SJGS for groundwater and soil contamination associated with former operations at SJGS. NMED has requested PNM to submit the S1AP within 60 days of July 29, 2025. PNM is currently assessing the letter and its response.

**PVNGS Liability and Insurance Matters**

Public liability for incidents at nuclear power plants is governed by the Price-Anderson Nuclear Industries Indemnity Act, which limits the liability of nuclear reactor owners to the amount of insurance available from both commercial sources and an industry-wide retrospective payment plan. The insurance limit is subject to an adjustment every five years based upon the aggregate percentage change in the Consumer Price Index. The most recent adjustment took effect on January 1, 2024. As of that date, in accordance with this act, the PVNGS participants are insured against public liability exposure for a nuclear incident up to $16.3 billion per occurrence. PVNGS maintains the maximum available nuclear liability insurance in the amount of $500 million, which is provided by American Nuclear Insurers. The remaining $15.8 billion is provided through a mandatory industry-wide retrospective assessment program. If losses at any nuclear power plant covered by the program exceed the accumulated funds, PNM could be assessed retrospective premium adjustments. The maximum retrospective premium per reactor under the program for each nuclear liability incident is $165.9 million, subject to a maximum annual premium of $24.7 million per incident. Based on PNM's ownership interest in the three units, PNM's maximum retrospective premium per incident for all three units is $36.3 million, with a maximum annual payment limitation of $5.4 million, to be adjusted periodically for inflation.

The PVNGS participants maintain insurance for damage to, and decontamination of, property at PVNGS in the aggregate amount of $2.8 billion, a substantial portion of which must first be applied to stabilization and decontamination. These coverages are provided by Nuclear Electric Insurance Limited ("NEIL"). The primary policy offered by NEIL contains a sublimit of $2.25 billion for non-nuclear property damage. If NEIL's losses in any policy year exceed accumulated funds, PNM is subject to retrospective premium adjustments of $5.3 million. The insurance coverages discussed in this and the previous paragraph are subject to certain policy conditions, sublimits, and exclusions.

**(12) Regulatory and Rate Matters**

The Company is involved in various regulatory matters, some of which contain contingencies that are subject to the same uncertainties as those described in Note 11. Additional information concerning regulatory and rate matters is contained in Note 17 of the Notes to Consolidated Financial Statements in the 2024 Annual Reports on Form 10-K.

**PNM**

*New Mexico General Rate Case*

*2025 Rate Request*

On June 14, 2024, PNM filed an application with the NMPRC for a general increase in retail electric rates. The proposed base rate changes would be implemented in two phases, with the first phase effective July 1, 2025 and the second phase effective January 1, 2026. Key aspects of PNM's request include:

- Recovery on total rate base of $3.0 billion, based on a FTY with the 12 months ending June 30, 2026
- An increase of $174.3 million in retail revenues, comprised of a $92.2 million increase in base rates and a $82.1 million increase in revenues collected under PNM's FPPAC
- Drivers of revenue deficiency:
  - Needed investments across distribution, transmission, and generation facilities to ensure safe, reliable delivery of electricity
  - Increased operations and maintenance expenses to meet operational needs, including wildfire risk mitigation
  - Costs associated with ESAs, previously approved by the NMPRC, necessary to serve our customers
  - ROE of 10.45%
  - Proposed capital structure of 52.5% equity
  - An increased cost of borrowing
  - Adjustments to Four Corners depreciation rates to recover remaining plant investments through July 2031, the expected abandonment date of the facility
- Proposed ratemaking treatment of ESAs to be recovered through PNM's FPPAC beginning July 1, 2025

Table of Contents

**TXNM ENERGY, INC. AND SUBSIDIARIES**
**PUBLIC SERVICE COMPANY OF NEW MEXICO AND SUBSIDIARIES**
**TEXAS-NEW MEXICO POWER COMPANY AND SUBSIDIARIES**

**NOTES TO CONDENSED CONSOLIDATED FINANCIAL STATEMENTS**
(Unaudited)

On November 26, 2024, PNM filed an unopposed comprehensive stipulation with the NMPRC. Key components agreed upon by the signatories are as follows:

- Overall revenue requirement increase of $105.0 million with the first phase effective July 1, 2025 and the second phase effective April 1, 2026
- ROE of 9.45%
- Capital structure of 51.0% equity
- Maintain currently approved depreciation rates for Four Corners as established in PNM's 2024 Rate Change and PNM's NM 2015 Rate Case
- Modification of PNM's current amortization period through December 31, 2028 on the unprotected Excess Deferred Federal Income Taxes ("EDFIT") regulatory liability to reflect amortization of remaining unprotected EDFIT through December 31, 2027
- Costs associated with ESAs shall be recovered through base rates
    - PNM will establish a regulatory asset or regulatory liability for the difference in actual ESA costs compared to the forecasted $82.1 million included in base rates in the test period and thereafter until new rates are effective from PNM's next general rate case filing. The regulatory asset or regulatory liability will be subject to NMPRC approval in PNM's next rate case
- PNM will establish a regulatory liability associated with investment tax credits for the Sandia energy storage system as proposed in its application
- PNM will establish a regulatory liability equal to the return on legacy meters currently included in rates, as the legacy meters are retired during PNM's deployment of its approved Grid Modernization Plan
- PNM will make a one-time shareholder contribution of $1.5 million to the Good Neighbor Fund

A hearing was held on February 17 and 18, 2025. On April 8, 2025, the hearing examiners issued a certification of stipulation recommending approval of the unopposed stipulation and on May 15, 2025, the NMPRC issued a final order adopting the unopposed stipulation. This matter is now concluded.

*2024 Rate Change*

In December 2022, PNM filed an application with the NMPRC for a general increase in retail electric rates. On January 3, 2024, the NMPRC issued a final order authorizing PNM to implement an increase in non-fuel base rates of $15.3 million, effective for service beginning January 15, 2024. The final order included an ROE of 9.26% and a capital structure of 49.61% equity, 50.10% debt, and 0.29% preferred stock. As a result of the final order, PNM recorded a regulatory disallowance of $55.5 million and a corresponding reduction to Utility Plant in the year ended December 31, 2023, after accounting for previous impairments, to reflect the remedy adopted in the Final Order for Four Corners. In addition, PNM had recorded a reduction to electric operating revenues of $38.4 million with a corresponding increase to current regulatory liability of $19.2 million and deferred regulatory liability of $19.2 million for the PVNGS rate refunds that are being returned to customers over a two-year period ending March 2026. PNM had also recorded a regulatory disallowance of $8.2 million and a corresponding reduction to Utility Plant for the disallowance of construction work in progress ("CWIP") from PVNGS.

In March 2024, notice of appeals were separately filed with the NM Supreme Court by NEE and PNM, and a joint notice of appeal was filed by the NM Department of Justice, Bernalillo County, and Albuquerque Bernalillo County Water Utility Authority ("ABCWUA"). NEE's appeal was subsequently consolidated with the joint notice of appeal. In the statements of issues submitted in the parties' appellate dockets, PNM took issue with the NMPRC's ruling on capital structure; other appellants primarily challenged the NMPRC rulings related to Four Corners and Palo Verde cost recovery. On June 20, 2025, PNM filed an uncontested motion to dismiss its appeal. PNM cannot predict the outcome of this matter.

*Renewable Energy Portfolio Standard*

As discussed in Note 11, the ETA amends the REA including removal of diversity requirements and certain customer caps and exemptions relating to the application of the RPS under the REA. The REA provides for streamlined proceedings for approval of utilities' renewable energy procurement plans, assures that utilities recover costs incurred consistent with approved procurement plans, and requires the NMPRC to establish a Reasonable Cost Threshold ("RCT") for the procurement of renewable resources to prevent excessive costs being added to rates. The ETA sets a RCT of $60 per MWh, adjusted for inflation, using an average annual levelized resource cost basis. PNM makes renewable procurements consistent with the NMPRC approved plans and recovers certain renewable procurement costs from customers through the renewable energy rider billed on a KWh basis.

Table of Contents

**TXNM ENERGY, INC. AND SUBSIDIARIES**
**PUBLIC SERVICE COMPANY OF NEW MEXICO AND SUBSIDIARIES**
**TEXAS-NEW MEXICO POWER COMPANY AND SUBSIDIARIES**

**NOTES TO CONDENSED CONSOLIDATED FINANCIAL STATEMENTS**
(Unaudited)

Included in PNM's approved procurement plans are the following renewable energy resources:

- 158 MW of PNM-owned solar-PV facilities
- A PPA through 2044 for the output of New Mexico Wind, having a current aggregate capacity of 200 MW, and a PPA through 2035 for the output of Red Mesa Wind, having an aggregate capacity of 102 MW
- A PPA through 2040 for 140 MW of output from La Joya Wind II
- A PPA through 2042 for the output of the Lightning Dock Geothermal facility with a capacity of 11 MW
- Solar distributed generation, aggregating 320.5 MW at June 30, 2025, owned by customers or third parties from whom PNM purchases any net excess output and RECs

The NMPRC has authorized PNM to recover certain renewable procurement costs through a rate rider billed on a per KWh basis. In its 2025 renewable energy procurement plan, which became effective on January 1, 2025, PNM proposed to collect $58.7 million for the year. PNM recorded revenues from the rider of $14.6 million and $31.6 million in the three and six months ended June 30, 2025 and $15.3 million and $30.6 million in the three and six months ended June 30, 2024.

Under the renewable rider, if PNM's earned rate of return on jurisdictional equity in a calendar year, adjusted for items not representative of normal operations, exceeds the NMPRC-approved rate by 0.5%, PNM is required to refund the excess to customers during May through December of the following year. PNM did not exceed such limitation in 2024. On May 30, 2025, PNM filed its application for its 2026 renewable energy procurement plan, requesting to collect $54.3 million for the year.

*Energy Efficiency and Load Management*

*Program Costs and Incentives/Disincentives*

The EUEA requires public utilities to achieve specified levels of energy savings and to obtain NMPRC approval to implement energy efficiency and load management programs. The EUEA requires the NMPRC to remove utility disincentives to implementing energy efficiency and load management programs and to provide incentives for such programs. The NMPRC has adopted a rule to implement this act. PNM's costs to implement approved programs and incentives are recovered through a rate rider. During the 2019 New Mexico legislative session, the EUEA was amended to, among other things, include a decoupling mechanism for disincentives, preclude a reduction to a utility's ROE based on approval of disincentive or incentive mechanisms, establish energy savings targets for the period 2021 through 2025, and require that annual program funding be 3% to 5% of an electric utility's annual customer bills excluding gross receipt taxes, franchise and right-of-way access fees, provided that a customer's annual cost does not exceed seventy-five thousand dollars.

In 2023, PNM filed an application for energy efficiency and load management programs to be offered in 2024, 2025, and 2026 (the "2024 Plan"). The 2024 Plan proposed to continue ten existing energy efficiency programs with modification and a total annual budget of $34.5 million in 2024, $35.4 million in 2025, and $36.5 million in 2026. The application also sought approval of an annual base incentive of 7.1% of the portfolio budget and a sliding scale that provides additional incentive for additional energy saved as a percentage of program cost, up to the maximum allowed by the energy efficiency rule which for PNM is 8.82%. On January 26, 2024, the hearing examiners in the case issued a RD. The RD largely approved PNM's 2024 Plan but with modifications that include the pursuit of demand response resources, additional analysis in future filings, adjustments to certain energy efficiency programs, and modification of the incentive sliding scale cap to reflect a new maximum. On March 7, 2024, the NMPRC approved the RD in its entirety.

*Integrated Resource Plans*

NMPRC rules require that investor-owned utilities file an IRP every three years and is required to cover a 20-year planning period and contain an action plan covering the first three years of that period. The IRP establishes a collaborative facilitated process for a utility and stakeholders to agree on a statement of need for potential new or additional resources, as well as an action plan to guide procurement or development of resources to meet the stated need. A most-cost-effective portfolio of resources shall be derived from the statement of need analysis. The statement of need and action plan must be accepted before the utility begins the resource solicitation process pursuant to the IRP Rule. Following acceptance of the statement of need and action plan, a utility will provide the NMPRC and intervenors drafts of the RFP and a timeline for issuing, receiving, evaluating, and ranking bids. The NMPRC will then appoint an Independent Monitor ("IM") to oversee the RFP process, which allows for parties and the IM to comment on the RFP consistency with the IRP, after which the utility issues the RFP. Within 120 days of receiving bids the utility shall provide the IM with results including pricing and non-price

Table of Contents



evaluation criteria, ranking of bids, chosen portfolio and alternatives that also meet the needs; the IM then rules on the fairness of the RFP execution. Acceptance of the statement of need and action plan will not constitute a finding of prudency or pre-approval of costs associated with the additional resources. Following the RFP and IM processes, the utility may apply for approvals, and any costs incurred to implement the action plan will be considered in a general rate case and/or resource acquisition proceeding.

*2023 IRP*

On December 15, 2023, PNM filed its 2023 IRP with a continued focus on a carbon-free energy system by 2040. The plan highlights the need for the significant sustained addition of resources over the next two decades, replacing retiring or expiring capacity, meeting concurrent load growth, while reducing the carbon intensity of PNM's portfolio. On April 4, 2024, the NMPRC accepted PNM's 2023 IRP.

On December 30, 2024, PNM issued its 2029-2032 RFP for at least 900 MW of new energy resources to come online between 2029 and 2032, with at least 500 MW needed by 2030. The RFP is consistent with the needs identified in PNM's 2023 IRP, which identified a range of 900 to 2,900 MW of new capacity needed by 2032, depending on the type of resources selected. The 2029-2032 RFP is anticipated to identify potential replacement resources for PNM's current natural gas generation capacity as well as PNM's ownership interest in Four Corners.

*2028 Resource Application*

On November 22, 2024, PNM filed an application with the NMPRC seeking approval of ESAs, a PPA, and a CCN for system resources in 2028 to be available to meet summer 2028 customer needs. PNM's request includes:

- Two 150 MW ESAs
- A 167 MW PPA for the Valencia power plant through 2039
- A CCN for a 100 MW solar facility and a 30 MW battery to be PNM-owned and located in San Juan County. The request provides the opportunity to increase the 30 MW battery by an additional 20 MW

On March 12, 2025, PNM and intervening parties filed an unopposed comprehensive stipulation with the NMPRC. The stipulation supports approval of PNM's application, including the proposed option to increase the 30 MW battery by an additional 20 MW. On May 6, 2025, the hearing examiners issued a certification of stipulation recommending approval of the unopposed stipulation and on June 26, 2025, the NMPRC approved the unopposed stipulation. This matter is now concluded.

*Grid Modernization Plan*

In October 2022, in compliance with New Mexico Grid Modernization Statute, PNM filed its Grid Modernization Plan with the NMPRC. The projects included in the application improve customers' ability to customize their use of energy and ensure that customers, including low-income customers, are a top priority and will benefit consistent with the Grid Modernization Statute. PNM's proposal to modernize its electricity grid through infrastructure and technology improvements also increases the efficiency, reliability, resilience, and security of PNM's electric system. PNM's application included grid modernization investments of approximately $344 million for the first six years of a broader 11-year strategy. The approved rate rider will recover capital costs, operating expenses, and taxes associated with the investments included in the plan. On October 17, 2024, the NMPRC issued a final order which largely approved PNM's application with minor modifications.

On June 20, 2025, PNM filed its first annual Grid Modernization Plan review to provide updates on year one implementation progress and outline planned activities for year two, in alignment with regulatory expectations. Additionally, PNM has updated key portions of the forecasted strategy including increasing investments from approximately $344 million to $367 million in the first six years, while decreasing projected operations and maintenance costs by approximately 18%.

*Transportation and Electrification Program (TEP)*

On June 1, 2023, PNM filed its 2024-2026 TEP with the NMPRC, requesting approval of a $37.1 million total three-year budget and continuation of the current TEP Rider. Approximately 22% of the budget, $8.0 million, will be dedicated to low-income customers. On February 2, 2024, the hearing examiners in the case issued a RD largely approving PNM's 2024-2026 TEP but with certain modifications. On February 23, 2024, the NMPRC approved the RD with modifications that reduced the three-year budget by $4.0 million, for a total revised budget of $32.9 million. The TEP rider became effective on April 26, 2024.

Table of Contents

**TXNM ENERGY, INC. AND SUBSIDIARIES**
**PUBLIC SERVICE COMPANY OF NEW MEXICO AND SUBSIDIARIES**
**TEXAS-NEW MEXICO POWER COMPANY AND SUBSIDIARIES**

**NOTES TO CONDENSED CONSOLIDATED FINANCIAL STATEMENTS**
(Unaudited)

*Meta Platforms Inc. Data Center - Phase IV*

PNM has a special service contract to provide service to Meta for a data center in PNM's service area. Meta's service requirements include the acquisition by PNM of a sufficient amount of new renewable energy resources and RECs to match the energy and capacity requirements of the data center. The cost of renewable energy procured is passed through to Meta under a rate rider. A special service rate is applied to Meta's energy consumption in those hours of the month when their consumption exceeds the energy production from the renewable resources.

On June 13, 2025, PNM filed an application with the NMPRC for an amended special service contract, PPAs, ESAs, special service rate, and an amended rate rider to service a new phase of the data center, the Greater Kudo, LLC Data Center. This amended special service contract requests:

- three 20-year solar PPAs totaling 290 MW
- three 20-year ESAs totaling 268 MW of storage
- a third revised and restated special service contract with Greater Kudo, LLC Data Center; and
- updates to the special service rate - Renewable Energy Resources, the Green Energy Rider, and the Production Cost Allocation Rider.

On July 3, 2025 a procedural order was issued, with a hearing scheduled for October 27, 2025. PNM is unable to predict the outcome of this matter.

**TNMP**

On June 20, 2025, Texas House Bill 5247 ("HB 5247") was signed into law by Governor Gregg Abbott. HB 5247, which took effect immediately, added Section 36.216 to the Public Regulatory Act ("PURA 36.216"), authorizing certain electric utilities with total capital expenditures that exceeded 300 percent of annual depreciation in a calendar year, to elect, in the following calendar year, to file a single, annual proceeding to adjust nonfuel rates on a system-wide basis to reflect changes in transmission and distribution rates previously authorized under certain other interim rate mechanisms. A utility seeking to make this election under PURA 36.216 is required to file a notice with the PUCT informing them of its intent and provide supporting documentation of the applicable capital expenditures at least 60 days before filing the single, annual proceeding and correspondingly must notify the PUCT if the utility determines that it no longer qualifies for continued use of the election. Management has evaluated the application of HB 5247 and PURA 36.216 and determined that TNMP qualifies as the type of electric utility that would be eligible for the election. Currently, TNMP expects to make its first comprehensive filing under Section 36.216 in 2026 with a view towards recovering costs associated with eligible transmission and distribution investments that were placed into service after December 31, 2024 and that are not currently reflected in rates. In the interim, TNMP plans to immediately begin to recognize a regulatory asset for depreciation associated with eligible capital investments placed into service after December 31, 2024. At June 30, 2025 the regulatory asset associated with these costs totals $0.6 million.

*Sales and Use Tax Refund*

On March 12, 2025, TNMP filed a refund claim with the Texas Comptroller's office for overpaid sales and use taxes primarily related to asset purchases. The $33.6 million refund request covers periods from January 2022 to October 2024. Although the Company is unable to predict the outcome of the refund claim, the bulk of any refund amounts received, net of consultant fees, are expected to be applied to 2025 TNMP capital projects.

*Transmission Cost of Service Rates*

TNMP can update its TCOS rates twice per year to reflect changes in its invested capital although updates are not allowed while a general rate case is in process. Updated rates reflect the addition and retirement of transmission facilities, including appropriate depreciation, federal income tax and other associated taxes, and the approved rate of return on such facilities.

Table of Contents

**TXNM ENERGY, INC. AND SUBSIDIARIES**
**PUBLIC SERVICE COMPANY OF NEW MEXICO AND SUBSIDIARIES**
**TEXAS-NEW MEXICO POWER COMPANY AND SUBSIDIARIES**

**NOTES TO CONDENSED CONSOLIDATED FINANCIAL STATEMENTS**
(Unaudited)

The following sets forth TNMP's recent interim transmission cost rate increases:

| Effective Date | Approved Increase in Rate Base | Annual Increase in Revenue |
|---|---|---|
| | (In millions) | |
| September 6, 2023 | $ 21.4 | $ 4.2 |
| March 15, 2024 | 97.4 | 13.1 |
| September 20, 2024 | 20.6 | 3.9 |
| March 25, 2025 | 83.5 | 11.5 |

On July 24. 2025, TNMP filed an application to further update its transmission rates to reflect an increase in total rate base of $87.4 million, which would increase revenues by $12.3 million annually. The application is pending before the PUCT.

*Periodic Distribution Rate Adjustment*

PUCT rules permit interim rate adjustments twice per year to reflect changes in investments in distribution assets. Additionally, a DCRF may be filed during a pending rate case proceeding as long as that DCRF request is not filed until the 185th day after the rate case proceeding was initiated. The following sets forth TNMP's recent interim distribution rate increases:

| Effective Date | Approved Increase in Rate Base | Annual Increase in Revenue |
|---|---|---|
| | (In millions) | |
| September 1, 2023 | $ 157.0 | $ 14.5 |
| July 28, 2024 | 205.9 | 15.6 |
| November 17, 2024 | 43.7 | 7.7 |
| June 29, 2025 | 176.6 | 25.0 |

On July 31, 2025, TNMP filed its second 2025 DCRF that requested an increase in TNMP annual distribution revenues of $5.4 million based on an increase in rate base of $27.9 million. The case is pending review by the PUCT.

*Energy Efficiency*

TNMP recovers the costs of its energy efficiency programs through an energy efficiency cost recovery factor ("EECRF"), which includes projected program costs, under and over collected costs from prior years, rate case expenses, and performance bonuses (if programs exceed mandated savings goals). On May 31, 2024, TNMP filed its request to adjust the EECRF to reflect changes in costs for 2025. On October 24, 2024, the PUCT approved the total amount requested, authorizing recovery of $7.0 million, which includes a performance bonus of $1.3 million based on TNMP's energy efficiency achievements in the 2023 plan year and became effective March 1, 2025. On May 30, 2025, TNMP filed its request to adjust the EECRF to reflect changes in costs for 2026. The total amount requested was $8.1 million, which includes a performance bonus of $2.5 million based on TNMP's energy efficiency achievements in 2024. The case is pending review by the PUCT.

*Hurricane Beryl*

On July 8, 2024, Hurricane Beryl made landfall in the Texas Gulf Coast leaving approximately 116,000 customers in the TNMP service area without power. As of June 30, 2025, TNMP incurred $53.8 million of costs, of which $33.4 million has been recorded in Utility Plant and $20.4 million has been recorded as a Regulatory Asset on the Condensed Consolidated Balance Sheets. TNMP will seek collection of such costs in a future regulatory proceeding.

*System Resiliency Plan ("SRP")*

In 2023, the Texas Legislature enacted House Bill No, 2555 ("HB 2555"), permitting an electric utility to seek approval of, and cost recovery for, a system resiliency plan. On August 28, 2024, TNMP filed its first SRP with the PUCT designed to benefit customers through enhanced resiliency of its distribution system, as intended under HB 2555. The SRP includes approximately $600 million of capital investments and approximately $151 million of other related costs over three

Table of Contents



years and was developed using a comprehensive and data-driven approach which evaluated various types of resiliency events posing material risk to the safe and reliable operation of TNMP's distribution system. TNMP's service territory includes non-contiguous areas across different regions of Texas, ranging from small communities and rural areas to communities around large metropolitan areas, each with unique risks. Investments in the SRP are prioritized based on customer benefit, physical protection of infrastructure, foundational investments in operational and cybersecurity technologies, and wildfire risk reduction and are focused on lower-performing areas in the context of reliability. Eight different resiliency measures are outlined in the SRP with associated programs and infrastructure impacts to improve the system's ability to prevent, withstand, mitigate and/or more promptly recover from resiliency events: distribution system resiliency, distribution system protection modernization, vegetation management, wildfire mitigation, flood mitigation, enhanced operations system technology, cybersecurity, and physical security resiliency. Recovery of investments and costs are permissible primarily through semi-annual DCRF filings, with deferral of depreciation and other certain expenses until recovery begins.

On December 11, 2024, TNMP filed an unopposed settlement with the PUCT. The settlement includes $565.8 million of capital investments over 2025 through 2027, reflecting 94% of TNMP’s proposed plan investments. The settlement also encompasses $128.2 million of operations and maintenance expenses associated with several programs, including vegetation management and wildfire mitigation. On March 26, 2025, TNMP received the final order from the PUCT which included modifications reflecting capital investments of $545.8 million and $86.1 million of operating and maintenance costs.

**(13) Lease Commitments**

The Company leases office buildings, vehicles, energy storage facilities, and other equipment. In addition, certain rights-of-way agreements are classified as leases. All of the Company’s leases with terms in excess of one year are recorded on the balance sheet by recording a present value lease liability and a corresponding right-of-use asset. Operating lease expense is recognized within operating expenses according to the use of the asset on a straight-line basis. Financing lease costs, which are comprised primarily of fleet and office equipment leases commencing after January 1, 2019, are recognized by amortizing the right-of-use asset on a straight-line basis and by recording interest expense on the lease liability. Financing lease right-of-use assets amortization is reflected in depreciation and amortization and interest on financing lease liabilities is reflected as interest charges on the Company’s Condensed Consolidated Statements of Earnings. See additional discussion of the Company’s leasing activities in Note 8 of the Notes to Consolidated Financial Statements in the 2024 Annual Reports on Form 10-K.

*PVNGS*

In 1985 and 1986, PNM entered into leases for its interest in PVNGS Unit 1 and 2. The leases initially were scheduled to expire in January 2015 for four Unit 1 leases and January 2016 for four Unit 2 leases. Following procedures set forth in the PVNGS leases, PNM notified four of the lessors under the Unit 1 leases and one lessor under the Unit 2 lease that it would elect to renew those leases on the expiration date of the original leases. The four Unit 1 leases expired in January 2023 and the one Unit 2 lease expired in January 2024. PNM has no further lease payments related to PVNGS Unit 1 or 2.

On April 5, 2021, PNM and Salt River Project entered into an Asset Purchase and Sale Agreement, pursuant to which PNM agreed to sell to Salt River Project certain PNM-owned assets and nuclear fuel necessary to the ongoing operation and maintenance of leased capacity in PVNGS Unit 1 and Unit 2. In January 2023, the Unit 1 leases expired, and PNM closed on the associated sale to Salt River Project. In January 2024, the Unit 2 leases expired, and PNM closed on the associated sale to Salt River Project, receiving payments totaling $3.4 million, of which $2.8 million was recorded as a reduction to Net utility plant on the Condensed Consolidated Balance Sheets and was presented as cash flows from investing activities on the Condensed Consolidated Statement of Cash Flows. In addition, $0.6 million was recorded as a reduction to Materials, supplies and fuel stock on the Condensed Consolidated Balance Sheets and was presented as cash flows from operating activities on the Condensed Consolidated Statement of Cash Flows.

*Land Easements and Rights-of-Way*

Many of PNM’s electric transmission and distribution facilities are located on lands that require the grant of rights-of-way from governmental entities, Native American tribes, or private parties. PNM has completed several renewals of rights-of-way, the largest of which is a renewal with the Navajo Nation. PNM is obligated to pay the Navajo Nation annual payments of $6.0 million, subject to adjustment each year based on the Consumer Price Index, through 2029. PNM’s April 2025 payment for the amount due under the Navajo Nation right-of-way lease was $8.8 million, which included amounts due under the Consumer Price Index adjustment. Changes in the Consumer Price Index subsequent to January 1, 2019 are considered variable lease payments.

Table of Contents

**TXNM ENERGY, INC. AND SUBSIDIARIES**
**PUBLIC SERVICE COMPANY OF NEW MEXICO AND SUBSIDIARIES**
**TEXAS-NEW MEXICO POWER COMPANY AND SUBSIDIARIES**

**NOTES TO CONDENSED CONSOLIDATED FINANCIAL STATEMENTS**
(Unaudited)

PNM has other prepaid rights-of-way agreements that are not accounted for as leases or recognized as a component of plant in service. PNM reflects the unamortized balance of these prepayments in other deferred charges on the Condensed Consolidated Balance Sheets and recognizes amortization expense associated with these agreements in the Condensed Consolidated Statement of Earnings over their term. As of June 30, 2025 and December 31, 2024, the unamortized balance of these rights-of-ways was $61.3 million and $67.1 million. PNM recognized amortization expense associated with these agreements of $1.2 million and $2.2 million in the three and six months ended June 30, 2025 and $1.0 million and $2.1 million in the three and six months ended June 30, 2024.

*Fleet Vehicles and Equipment*

Fleet vehicle and equipment leases commencing on or after January 1, 2019 are classified as financing leases. Fleet vehicle and equipment leases existing as of December 31, 2018 are classified as operating leases. The Company's fleet vehicle and equipment lease agreements include non-lease components for insignificant administrative and other costs that are billed over the life of the agreement. At June 30, 2025, residual value guarantees on fleet vehicle and equipment leases are $0.7 million, $0.7 million, and $1.4 million for PNM, TNMP, and TXNM Consolidated.

*Energy Storage Agreements*

The Company has ESAs with fixed payments over the life of the agreements, that are accounted for as operating leases, for which Company records the initial lease liabilities and corresponding right-of-use assets. The Company also has ESAs with monthly payments that vary, depending on the available capacity of the energy storage facility, that are also accounted for as operating leases. However, due to the variable nature of the consideration, these agreements do not require a lease liability or a right-of-use asset to be recorded upon inception. Expenses for this type of lease are reflected in variable lease expense in the tables below. In addition, the Company has elected to separate lease components from non-lease components for ESAs and accordingly, does not include non-lease components in the measurement of the lease liability or right-of-use asset. The non-lease components, which are not included in the measurement of the lease liability or the corresponding right-of-use asset, comprise 25.5% of the value of the agreements.

Information related to the Company's operating leases recorded on the Condensed Consolidated Balance Sheets is presented below:

| | June 30, 2025 | | | December 31, 2024 | | |
|---|---|---|---|---|---|---|
| | PNM | TNMP | TXNM | PNM | TNMP | TXNM |
| | (In thousands) | | | | | |
| Operating leases: | | | | | | |
| Operating lease assets, net of amortization | $ 265,016 | $ 388 | $ 265,919 | $ 271,433 | $ 923 | $ 272,894 |
| Current portion of operating lease liabilities | 13,253 | 348 | 13,640 | 13,542 | 713 | 14,293 |
| Long-term portion of operating lease liabilities | 245,330 | 31 | 245,847 | 254,702 | 167 | 255,376 |

As discussed above, the Company classifies its fleet vehicle and equipment leases and its office equipment leases commencing on or after January 1, 2019 as financing leases. Information related to the Company's financing leases recorded on the Condensed Consolidated Balance Sheets is presented below:

| | June 30, 2025 | | | December 31, 2024 | | |
|---|---|---|---|---|---|---|
| | PNM | TNMP | TXNM | PNM | TNMP | TXNM |
| | (In thousands) | | | | | |
| Financing leases: | | | | | | |
| Non-utility property | $ 25,717 | $ 27,843 | $ 54,912 | $ 24,548 | $ 24,420 | $ 50,144 |
| Accumulated depreciation | (11,814) | (13,825) | (25,989) | (10,997) | (13,411) | (24,604) |
| Non-utility property, net | 13,903 | 14,018 | 28,923 | 13,551 | 11,009 | 25,540 |
| | | | | | | |
| Other current liabilities | $ 4,685 | $ 5,270 | $ 10,284 | $ 4,311 | $ 4,527 | $ 9,126 |
| Other deferred credits | 9,242 | 8,776 | 18,716 | 9,262 | 6,504 | 16,470 |

Table of Contents

**TXNM ENERGY, INC. AND SUBSIDIARIES**
**PUBLIC SERVICE COMPANY OF NEW MEXICO AND SUBSIDIARIES**
**TEXAS-NEW MEXICO POWER COMPANY AND SUBSIDIARIES**

**NOTES TO CONDENSED CONSOLIDATED FINANCIAL STATEMENTS**
(Unaudited)

Information concerning the weighted average remaining lease terms and the weighted average discount rates used to determine the Company's lease liabilities is presented below:

| | June 30, 2025 | | | December 31, 2024 | | |
|---|---|---|---|---|---|---|
| | PNM | TNMP | TXNM | PNM | TNMP | TXNM |
| Weighted average remaining lease term (years): | | | | | | |
| Operating leases | 17.30 | 0.67 | 17.26 | 17.52 | 1.10 | 17.45 |
| Financing leases | 3.31 | 3.16 | 3.23 | 3.51 | 2.80 | 3.20 |
| Weighted average discount rate: | | | | | | |
| Operating leases | 5.70 % | 4.46 % | 5.70 % | 5.68 % | 4.41 % | 5.68 % |
| Financing leases | 5.26 % | 5.43 % | 5.33 % | 5.08 % | 5.19 % | 5.12 % |

Information for the components of lease expense is as follows:

| | Three Months Ended June 30, 2025 | | | Six Months Ended June 30, 2025 | | |
|---|---|---|---|---|---|---|
| | PNM | TNMP | TXNM | PNM | TNMP | TXNM |
| | (In thousands) | | | | | |
| Operating lease cost: | | | | | | |
| Energy storage leases | $ 5,084 | $ — | $ 5,084 | $ 10,167 | $ — | $ 10,167 |
| Other operating leases | 1,863 | 131 | 2,012 | 3,726 | 285 | 4,048 |
| Amounts capitalized | (11) | (106) | (117) | (22) | (236) | (258) |
| Total operating lease expense | 6,936 | 25 | 6,979 | 13,871 | 49 | 13,957 |
| Financing lease cost: | | | | | | |
| Amortization of right-of-use assets | 1,230 | 1,549 | 2,864 | 2,431 | 2,843 | 5,452 |
| Interest on lease liabilities | 184 | 213 | 411 | 364 | 357 | 750 |
| Amounts capitalized | (898) | (1,455) | (2,354) | (1,778) | (2,650) | (4,428) |
| Total financing lease expense | 516 | 307 | 921 | 1,017 | 550 | 1,774 |
| Variable lease expense | 6,579 | — | 6,579 | 13,135 | — | 13,135 |
| Short-term lease expense | 178 | 8 | 198 | 369 | 12 | 423 |
| Total lease expense for the period | $ 14,209 | $ 340 | $ 14,677 | $ 28,392 | $ 611 | $ 29,289 |

| | Three Months Ended June 30, 2024 | | | Six Months Ended June 30, 2024 | | |
|---|---|---|---|---|---|---|
| | PNM | TNMP | TXNM | PNM | TNMP | TXNM |
| | (In thousands) | | | | | |
| Operating lease cost: | | | | | | |
| Energy storage leases | $ 2,947 | $ — | $ 2,947 | $ 5,893 | $ — | $ 5,893 |
| Other operating leases | 1,908 | 237 | 2,157 | 3,967 | 507 | 4,486 |
| Amounts capitalized | (28) | (209) | (237) | (63) | (442) | (505) |
| Total operating lease expense | 4,827 | 28 | 4,867 | 9,797 | 65 | 9,874 |
| Financing lease cost: | | | | | | |
| Amortization of right-of-use assets | 1,120 | 1,315 | 2,463 | 2,337 | 2,631 | 5,005 |
| Interest on lease liabilities | 143 | 147 | 294 | 287 | 299 | 591 |
| Amounts capitalized | (756) | (1,161) | (1,917) | (1,597) | (2,343) | (3,940) |
| Total financing lease expense | 507 | 301 | 840 | 1,027 | 587 | 1,656 |
| Variable lease expense | 433 | — | 433 | 793 | — | 793 |
| Short-term lease expense | 148 | 7 | 165 | 352 | 12 | 381 |
| Total lease expense for the period | $ 5,915 | $ 336 | $ 6,305 | $ 11,969 | $ 664 | $ 12,704 |

Table of Contents

**TXNM ENERGY, INC. AND SUBSIDIARIES**
**PUBLIC SERVICE COMPANY OF NEW MEXICO AND SUBSIDIARIES**
**TEXAS-NEW MEXICO POWER COMPANY AND SUBSIDIARIES**

**NOTES TO CONDENSED CONSOLIDATED FINANCIAL STATEMENTS**
(Unaudited)

Supplemental cash flow information related to the Company's leases is as follows:

| | Six Months Ended June 30, 2025 | | | Six Months Ended June 30, 2024 | | |
|---|---|---|---|---|---|---|
| | PNM | TNMP | TXNM | PNM | TNMP | TXNM |
| | (In thousands) | | | | | |
| Cash paid for amounts included in the measurement of lease liabilities: | | | | | | |
| Operating cash flows from operating leases | $ 17,114 | $ 27 | $ 17,173 | $ 13,701 | $ 26 | $ 13,737 |
| Operating cash flows from financing leases | 131 | 97 | 256 | 94 | 53 | 152 |
| Finance cash flows from financing leases | 884 | 447 | 1,499 | 919 | 533 | 1,487 |
| Non-cash information related to right-of-use assets obtained in exchange for lease obligations: | | | | | | |
| Operating leases | $ 49 | $ 9 | $ 58 | $ 27 | $ 69 | $ 663 |
| Financing leases | 2,789 | 5,855 | 8,848 | 831 | 1,736 | 2,885 |

Capitalized lease costs are reflected as investing activities on the Company's Condensed Consolidated Statements of Cash Flows for the six months ended June 30, 2025 and 2024. Future expected lease payments are shown below:

| | As of June 30, 2025 | | | | | | | |
|---|---|---|---|---|---|---|---|---|
| | PNM | | | TNMP | | TXNM | | |
| | | Operating | | | | | Operating | |
| | Financing | Energy Storage | Other | Financing | Operating | Financing | Energy Storage | Other |
| | (In thousands) | | | | | | | |
| Remainder of 2025 | $ 2,748 | $ 10,167 | $ 135 | $ 3,184 | $ 346 | $ 6,117 | $ 10,167 | $ 514 |
| 2026 | 5,045 | 20,333 | 7,045 | 5,122 | 16 | 10,537 | 20,333 | 7,130 |
| 2027 | 3,727 | 20,333 | 7,049 | 3,561 | 14 | 7,637 | 20,333 | 7,134 |
| 2028 | 2,307 | 20,333 | 7,052 | 2,090 | 11 | 4,564 | 20,333 | 7,135 |
| 2029 | 876 | 20,333 | 7,039 | 1,125 | — | 2,035 | 20,333 | 7,114 |
| Later years | 277 | 287,100 | 3,660 | 180 | — | 456 | 287,100 | 4,012 |
| Total minimum lease payments | 14,980 | 378,599 | 31,980 | 15,262 | 387 | 31,346 | 378,599 | 33,039 |
| Less: Imputed interest | 1,053 | 148,145 | 3,851 | 1,216 | 8 | 2,346 | 148,145 | 4,006 |
| Lease liabilities | $ 13,927 | $ 230,454 | $ 28,129 | $ 14,046 | $ 379 | $ 29,000 | $ 230,454 | $ 29,033 |

The above table includes $12.9 million, $12.2 million, and $25.2 million for PNM, TNMP, and TXNM at June 30, 2025 for expected future payments on fleet vehicle and equipment leases that could be avoided if the leased assets were returned and the lessor is able to recover estimated market value for the equipment from third parties.

At June 30, 2025, the Company has various lease arrangements that have been executed but have not yet commenced, which are primarily related to ESAs. The Company currently expects that certain leases with commencement dates in 2025 and 2029, that have lease terms expiring in 2045 and 2044, will be recognized as lease assets and liabilities upon the lease commencement. The expected total fixed consideration to be paid for these arrangements, which includes non-lease payments, is approximately $226.3 million over the 20-year terms of the agreements.

**(14) Income Taxes**

The Company makes an estimate of its anticipated effective tax rate for the year as of the end of each quarterly period within its fiscal year. In interim periods, income tax expense is calculated by applying the anticipated annual effective tax rate to year-to-date earnings before income taxes. Certain unusual or infrequently occurring items are excluded from the estimated annual rate calculation. Such items include regulatory disallowances, Merger-related costs, and excess tax benefits or deficiencies related to stock awards. At June 30, 2025, TXNM, PNM, and TNMP estimated their effective income tax rates for

Table of Contents

**TXNM ENERGY, INC. AND SUBSIDIARIES**
**PUBLIC SERVICE COMPANY OF NEW MEXICO AND SUBSIDIARIES**
**TEXAS-NEW MEXICO POWER COMPANY AND SUBSIDIARIES**

**NOTES TO CONDENSED CONSOLIDATED FINANCIAL STATEMENTS**
(Unaudited)

the year ended December 31, 2025 would be 13.37%, 9.35%, and 20.52%. The primary difference between the statutory income tax rates and the effective tax rates is the effect of the reduction in income tax expense resulting from the amortization of excess deferred federal income taxes.

During the six months ended June 30, 2025, income tax expense calculated by applying the expected annual effective income tax rate to earnings before income taxes was further decreased by excess tax benefits related to stock awards of $0.4 million for TXNM, of which $0.3 million was allocated to PNM and $0.1 million was allocated to TNMP, and by tax benefits on Merger-related costs of $3.6 million for TXNM, with immaterial amounts allocated to PNM and TNMP.

Beginning February 2018, PNM's NM 2016 Rate Case reflected the reduction in the federal corporate income tax rate resulting from enactment of legislation commonly known as the Tax Cuts and Jobs Act (the "TCJA"), including amortization of excess deferred federal income taxes. In accordance with the order in that case, PNM is returning the protected portion of excess deferred federal income taxes to customers over the average remaining life of plant in service as of December 31, 2017, and had been returning the unprotected portion of excess deferred federal income taxes to customers over a period of approximately twenty-three years. Pursuant to the final order in the 2024 Rate Change, the remaining balance of $62.7 million of unprotected excess deferred income taxes is being returned over a four-year period. The approved settlement in the TNMP 2018 Rate Case includes a reduction in customer rates to reflect the impacts of the TCJA beginning on January 1, 2019. TXNM, PNM, and TNMP will amortize federal excess deferred income taxes of $25.6 million, $22.9 million, and $2.7 million in 2025. See additional discussion of the impacts of the TCJA in Note 18 of the Notes to Consolidated Financial Statements in the 2024 Annual Reports on Form 10-K.

On July 4, 2025, changes in U.S. federal income tax laws were enacted through the OBBBA. The OBBBA generally extends and makes permanent the changes from the TCJA, including maintaining the 21% corporate tax rate, interest deductibility for regulated electric utilities, and state and local tax deductibility. The OBBBA also accelerates the phase-out of certain Inflation Reduction Act of 2022 energy tax credits and restricts the availability of credits for "foreign entities of concern." TXNM is evaluating the full effects of the OBBBA on its estimated annual effective tax rate and cash tax position but does not expect the OBBBA to have a material impact on its financial statements. As the OBBBA was signed into law after the close of the second quarter of 2025, no impacts are included in TXNM's operating results for the three and six months ended June 30, 2025.

**(15) Related Party Transactions**

TXNM, PNM, TNMP, and NMRD are considered related parties, as is PNMR Services Company, a wholly-owned subsidiary of TXNM that provides corporate services to TXNM and its subsidiaries in accordance with shared services agreements. These services are billed at cost on a monthly basis to the business units. In addition, prior to the sale of NMRD, PNM purchased renewable energy from certain NMRD-owned facilities at a fixed price per MWh of energy produced. On February 27, 2024, PNMR Development and AEP OnSite Partners sold their respective interests in NMRD and the table below reflects transactions with NMRD prior to the sale. The table below summarizes the nature and amount of related party transactions of TXNM, PNM, TNMP, and NMRD:

| | Three Months Ended June 30, | | Six Months Ended June 30, | |
|---|---|---|---|---|
| | 2025 | 2024 | 2025 | 2024 |
| | (In thousands) | | | |
| Services billings: | | | | |
| TXNM to PNM | $ 35,317 | $ 31,023 | $ 67,404 | $ 66,430 |
| TXNM to TNMP | 14,109 | 12,885 | 27,485 | 27,121 |
| PNM to TNMP | 86 | 109 | 165 | 190 |
| TNMP to TXNM | 28 | — | 56 | 10 |
| TXNM to NMRD | — | — | — | 66 |
| Renewable energy purchases: | | | | |
| PNM from NMRD | — | — | — | 1,523 |
| Interest billings: | | | | |
| TXNM to PNM | 76 | 25 | 84 | 39 |
| PNM to TXNM | 132 | 154 | 265 | 309 |
| TXNM to TNMP | 41 | 22 | 186 | 179 |

Table of Contents

**TXNM ENERGY, INC. AND SUBSIDIARIES**
**PUBLIC SERVICE COMPANY OF NEW MEXICO AND SUBSIDIARIES**
**TEXAS-NEW MEXICO POWER COMPANY AND SUBSIDIARIES**

**NOTES TO CONDENSED CONSOLIDATED FINANCIAL STATEMENTS**
(Unaudited)

## (16) Goodwill

The excess purchase price over the fair value of the assets acquired and the liabilities assumed by TXNM for its 2005 acquisition of TNP Enterprises, Inc. and Subsidiaries ("TNP") was recorded as goodwill and was pushed down to the businesses acquired. In 2007, the TNMP assets that were included in its New Mexico operations, including goodwill, were transferred to PNM. TXNM's reporting units that currently have goodwill are PNM and TNMP.

The Company evaluates its goodwill for impairment annually at the reporting unit level or more frequently if circumstances indicate that the goodwill may be impaired. Application of the impairment test requires judgment, including the identification of reporting units, assignment of assets and liabilities to reporting units, and determination of the fair value of each reporting unit.

In certain circumstances an entity may perform a qualitative analysis to conclude that the goodwill of a reporting unit is not impaired. Under a qualitative assessment an entity considers macroeconomic conditions, industry and market considerations, cost factors, overall financial performance, other relevant entity-specific events affecting a reporting unit, as well as whether a sustained decrease (both absolute and relative to its peers) in share price has occurred. An entity considers the extent to which each of the adverse events and circumstances identified could affect the comparison of a reporting unit's fair value with its carrying amount. An entity places more weight on the events and circumstances that most affect a reporting unit's fair value or the carrying amount of its net assets. An entity also considers positive and mitigating events and circumstances that may affect its determination of whether it is more likely than not that the fair value of a reporting unit is less than its carrying amount. An entity evaluates, on the basis of the weight of evidence, the significance of all identified events and circumstances in the context of determining whether it is more likely than not that the fair value of a reporting unit is less than its carrying amount. A quantitative analysis is not required if, after assessing events and circumstances, an entity determines that it is not more likely than not that the fair value of a reporting unit is less than its carrying amount.

In other circumstances, an entity may perform a quantitative analysis to reach the conclusion regarding impairment with respect to a reporting unit. An entity may choose to perform a quantitative analysis without performing a qualitative analysis and may perform a qualitative analysis for certain reporting units, but a quantitative analysis for others. The first step of the quantitative impairment test requires an entity to compare the fair value of the reporting unit with its carrying value, including goodwill. If, as a result of this analysis, the entity concludes there is an indication of impairment in a reporting unit having goodwill, the entity is required to perform the second step of the impairment analysis, determining the amount of goodwill impairment to be recorded. The amount is calculated by comparing the implied fair value of the goodwill to its carrying amount. This exercise would require the entity to allocate the fair value determined in step one to the individual assets and liabilities of the reporting unit. Any remaining fair value would be the implied fair value of goodwill on the testing date. To the extent the recorded amount of goodwill of a reporting unit exceeds the implied fair value determined in step two, an impairment loss would be reflected in results of operations.

TXNM periodically updates its quantitative analysis for both PNM and TNMP. The use of a quantitative approach in a given period is not necessarily an indication that a potential impairment has been identified under a qualitative approach.

When TXNM performs a quantitative analysis for PNM or TNMP, a discounted cash flow methodology is primarily used to estimate the fair value of the reporting unit. This analysis requires significant judgments, including estimations of future cash flows, which is dependent on internal forecasts, estimations of long-term growth rates for the business, and determination of appropriate weighted average cost of capital for the reporting unit. Changes in these estimates and assumptions could materially affect the determination of fair value and the conclusion of impairment.

When TXNM performs a qualitative or quantitative analysis for PNM or TNMP, TXNM considers market and macroeconomic factors including changes in growth rates, changes in the WACC, and changes in discount rates. TXNM also evaluates its stock price relative to historical performance, industry peers, and to major market indices, including an evaluation of TXNM's market capitalization relative to the carrying value of its reporting units.

For its annual evaluations performed as of April 1, 2025, TXNM performed a qualitative analysis for both the PNM and TNMP reporting units. In addition to the typical considerations discussed above, the qualitative analysis considered changes in the Company's expectations of future financial performance since the April 1, 2024 quantitative analysis performed for PNM, as well as the April 1, 2020 quantitative analysis and the previous qualitative analyses through April 1, 2024 performed for TNMP. This analysis considered Company-specific events such as the Merger, potential impacts of legal and regulatory matters discussed in Note 11 and Note 12, including the outcomes in the 2025 Rate Request, PNM's Grid Modernization Plan, and TNMP's System Resiliency Plan. Based on an evaluation of these and other factors, the Company determined it was not more likely than not that the April 1, 2025 carrying values of PNM and TNMP exceeded their fair value.

Table of Contents

**TXNM ENERGY, INC. AND SUBSIDIARIES**
**PUBLIC SERVICE COMPANY OF NEW MEXICO AND SUBSIDIARIES**
**TEXAS-NEW MEXICO POWER COMPANY AND SUBSIDIARIES**

**NOTES TO CONDENSED CONSOLIDATED FINANCIAL STATEMENTS**
(Unaudited)

For its annual evaluations performed as of April 1, 2024, TXNM performed a quantitative analysis for the PNM reporting unit and a qualitative analysis for the TNMP reporting unit. The quantitative analysis, discussed above, indicated that the fair value of the PNM reporting unit, which has goodwill of $51.6 million, exceeded its carrying value by approximately 54%. The qualitative analysis, in addition to the typical considerations discussed above, considered changes in the Company's expectations of future financial performance since the April 1, 2020 quantitative analysis and the previous qualitative analyses through April 1, 2023 performed for TNMP. The April 1, 2020 quantitative evaluations indicated the fair value of the TNMP reporting unit, which has goodwill of $226.7 million, exceeded its carrying value by approximately 38%. This analysis considered events specific to TNMP such as the potential impacts of legal and regulatory matters discussed in Note 11 and Note 12. Based on an evaluation of these and other factors, the Company determined it was not more likely than not that the April 1, 2024 carrying values of PNM and TNMP exceeded their fair value. Since the April 1, 2024 annual evaluation, there have been no events, including the Merger, or indications that the fair values of the reporting units with recorded goodwill have decreased below their carrying values.

**(17) Merger**

On May 18, 2025, TXNM, Parent, and Merger Sub, entered into the Merger Agreement, pursuant to which Merger Sub will merge with and into TXNM, with TXNM surviving the Merger as a direct wholly-owned subsidiary of Parent. Parent and Merger Sub are affiliates of Blackstone Infrastructure.

Pursuant to the Merger Agreement, each issued and outstanding share of the common stock of TXNM (other than (i) the issued shares of TXNM common stock that are owned by TXNM, Parent, Merger Sub, or any other wholly-owned subsidiaries of Parent or TXNM, in each case, not held on behalf of third parties, which will be automatically cancelled at the Effective Time and (ii) shares of TXNM common stock outstanding immediately prior to the Effective Time and held by a holder who has not voted in favor of, or consented in writing to, the Merger who is entitled to, and who has demanded, payment for fair value of such shares in accordance with applicable New Mexico law) will, at the Effective Time, be converted into the right to receive $61.25 in cash, without interest.

The proposed Merger has been unanimously approved by the Board. Consummation of the Merger is subject to the satisfaction or waiver of certain customary conditions, including, without limitation, the approval by at least a majority of the holders of outstanding shares of TXNM common stock entitled to vote thereon, the absence of any material adverse effect on TXNM, no legal prohibition on the consummation of the Merger (a "Legal Restraint"), and the receipt of certain required regulatory approvals (including PUCT, NMPRC, FERC, NRC and under the Hart-Scott-Rodino Antitrust Improvements Act of 1976). The Merger Agreement does not contain any financing condition. The Merger is currently expected to close in the second half of 2026.

The Merger Agreement provides that under limited specified circumstances, the Board may change its recommendation in respect of the Merger prior to the receipt of shareholder approval if it determines that an alternative acquisition proposal constitutes a Superior Proposal (as defined in the Merger Agreement) or if an event or circumstance (other than an acquisition proposal or an action taken pursuant to regulatory approval covenants) that is material, first becomes known to the Board after the execution of the Merger Agreement and affects or would reasonably be expected to affect the business of TXNM and its subsidiaries, taken as a whole, or the shareholders of TXNM (including the benefits of the Merger to the shareholders of TXNM), in which case Parent will have the right to terminate the Merger Agreement and receive the TXNM Termination Fee (as defined below).

The Merger Agreement may be terminated by each of TXNM and Parent under certain circumstances, including if the Merger is not consummated by the 15-month anniversary of the execution of the Merger Agreement (as extended, the "End Date"), so long as failure of the Merger to consummate on or before the End Date was not due to the breach of the Merger Agreement by such party, subject to an automatic extension of the End Date until December 31, 2026 and an additional three-month extension by mutual agreement of the parties, in each case if all of the conditions to the closing, other than the conditions related to obtaining regulatory approvals or the absence of a Legal Restraint, have been satisfied or waived. The Merger Agreement also provides for other customary termination rights for both Parent (including if the Board changes its recommendation in respect of the Merger) and TXNM. The Merger Agreement further provides that, upon termination of the Merger Agreement under certain specified circumstances (including if Parent terminates the Merger Agreement due to a change in recommendation of the Board or if TXNM terminates the Merger Agreement to accept a Superior Proposal), TXNM will be required to pay Parent a termination fee of $210.0 million plus costs and expenses ("TXNM Termination Fee"). In addition, the Merger Agreement provides that (i) if the Merger Agreement is terminated by either party as a result of a Legal Restraint (solely in connection with required regulatory approvals), (ii) if the Merger Agreement is terminated by either party as a result of the Merger not being consummated by the End Date, (iii) the Merger Agreement is terminated by TXNM as a result of a

Table of Contents

**TXNM ENERGY, INC. AND SUBSIDIARIES**
**PUBLIC SERVICE COMPANY OF NEW MEXICO AND SUBSIDIARIES**
**TEXAS-NEW MEXICO POWER COMPANY AND SUBSIDIARIES**

**NOTES TO CONDENSED CONSOLIDATED FINANCIAL STATEMENTS**
(Unaudited)

terminable breach by Parent, (iv) Parent fails to effect the closing when all closing conditions have been satisfied and it is otherwise obligated to do so under the Merger Agreement or (v) TXNM terminates the June 2025 Purchase Agreement (as defined below) as a result of Purchaser (as defined below) failing to timely consummate the Stock Purchase Closing (as defined below), then, in any such case, upon termination of the Merger Agreement, Parent will be required to pay TXNM a termination fee of $350.0 million plus costs and expenses as the sole and exclusive remedy (the "Parent Termination Fee").

Parent and Merger Sub have obtained equity and debt financing commitments for the transactions contemplated by the Merger Agreement. Pursuant to an equity commitment letter dated May 18, 2025 (the "Equity Commitment Letter"), Blackstone Infrastructure committed to provide Parent, at the consummation of the Merger, with an equity contribution in the amount set forth therein. In addition, pursuant to debt commitment letters ("Debt Commitment Letters") delivered to Merger Sub, Royal Bank of Canada, MUFG Bank, Ltd., BNP Paribas, Sumitomo Mitsui Banking Corporation and Canadian Imperial Bank of Commerce have agreed to provide debt financing to Merger Sub following the Closing on the terms and subject to the conditions set forth therein. The equity financing, when funded in accordance with the Equity Commitment Letter together with the debt financing when funded in accordance with the Debt Commitment Letters, will provide an amount that is sufficient to fund the payment of (i) the aggregate per share merger consideration, (ii) the repayment of certain TXNM debt to be satisfied at Closing and (iii) all related fees, costs and expenses. Additionally, following Closing, Parent and TXNM will have sufficient funds to repay, prepay or discharge certain other debt obligations of TXNM. In addition, Blackstone Infrastructure has entered into a limited guarantee with TXNM (the "Limited Guarantee"), pursuant to which Blackstone Infrastructure has guaranteed the obligations of Parent and Merger Sub to pay the Parent Termination Fee and certain costs and expenses reimbursement obligations of TXNM under the Merger Agreement. The Limited Guarantee is capped at $375.0 million.

Upon consummation of the Merger, the outstanding shares of TXNM common stock will be delisted from the New York Stock Exchange ("NYSE") and deregistered under the Exchange Act.

Table of Contents

## ITEM 2. MANAGEMENT'S DISCUSSION AND ANALYSIS OF FINANCIAL CONDITION AND RESULTS OF OPERATIONS

The following Management's Discussion and Analysis of Financial Condition and Results of Operations for TXNM is presented on a combined basis, including certain information applicable to PNM and TNMP. The MD&A for PNM and TNMP is presented as permitted by Form 10-Q General Instruction H(2). This report uses the term "Company" when discussing matters of common applicability to TXNM, PNM, and TNMP. A reference to a "Note" in this Item 2 refers to the accompanying Notes to Condensed Consolidated Financial Statements (Unaudited) included in Item 1, unless otherwise specified. Certain of the tables below may not appear visually accurate due to rounding.

### *MD&A FOR TXNM*

### EXECUTIVE SUMMARY

**Overview**

TXNM is a holding company with two regulated electric utilities, PNM and TNMP, serving approximately 839,000 residential, commercial, and industrial customers in New Mexico and Texas. TXNM strives to create a clean and bright energy future for customers, communities, and shareholders. TXNM's strategy and decision-making are focused on safely providing reliable, affordable, and environmentally responsible power built on a foundation of sustainability.

***Recent Developments***

*Merger*

On May 18, 2025, TXNM, Parent, and Merger Sub (both Parent and Merger Sub are affiliates of Blackstone Infrastructure) entered into the Merger Agreement pursuant to which Merger Sub will merge with and into TXNM, with TXNM surviving the Merger as a direct, wholly-owned subsidiary of Parent. Pursuant to the Merger Agreement, each issued and outstanding share of the common stock of TXNM (other than those listed in Note 17) at the Effective Time will be converted into the right to receive $61.25 in cash, without interest.

The proposed Merger has been unanimously approved by the Board. However, consummation of the Merger remains subject to the satisfaction or waiver of certain customary conditions, including, without limitation, the approval by at least a majority of the holders of the common stock of TXNM, no Legal Restraint, and the receipt of certain required regulatory approvals (including the PUCT, the NMPRC, the FERC, the NRC and under the Hart-Scott-Rodino Antitrust Improvements Act of 1976). The Merger Agreement does not contain any financing condition and is currently expected to close in the second half of 2026.

*2025 Rate Request*

In June 2024, PNM filed an application with the NMPRC for a general increase in retail electric rates. The application proposed an increase of $174.3 million in retail revenues which is comprised of a $92.2 million increase in base rates and a $82.1 million increase in revenues collected under PNM's FPPAC and reflected an ROE of 10.45%. The proposed base rate changes would be implemented in two phases, with the first phase effective July 1, 2025 and the second phase effective January 1, 2026. The requested changes reflect recovery of needed investments across distribution, transmission, and generation facilities to ensure safe reliable delivery of electricity, increased operations and maintenance expenses to meet operational needs including wildfire risk mitigation, necessary costs to service customers associated with ESAs previously approved by the NMPRC, and adjustments to Four Corners depreciation rates to recover remaining plant investments through July 2031, the expected abandonment date of the facility.

In November 2024, PNM filed its unopposed comprehensive stipulation with the NMPRC. Key components include an increase of $105.0 million in retail revenues with the first phase effective July 1, 2025, and the second phase effective April 1, 2026, reflecting an ROE of 9.45%. On April 8, 2025, the hearing examiners issued a certification of stipulation recommending approval of the unopposed stipulation and on May 15, 2025, the NMPRC issued a final order adopting the unopposed stipulation. This matter is now concluded.

***Vision, Values, and Business Objectives***

TXNM's vision is to create a clean and bright energy future while fulfilling its purpose to work together with customers and communities to meet their energy needs. TXNM's core values of Safety, Caring, and Integrity are the foundation for the Company's business objectives focused on safety excellence and customer satisfaction, including reliability.

Table of Contents

To reach these objectives, the Company is committed to:

- Preparing our workforce with the knowledge and skills to thrive in a customer-focused world
- Purposefully delivering an intentional customer experience that exceeds our evolving customer and stakeholder expectations
- Enabling an environmentally sustainable future and deploying technologically advanced solutions that empower and benefit customers
- Demonstrating the relationship between customer excellence and our dedicated focus on financial strength

Meeting the business objectives above will drive key financial results, including:

- Earning authorized returns on regulated businesses
- Delivering at or above industry-average long-term earnings growth, with a dividend payout ratio between 50 and 60 percent of earnings
- Maintaining investment grade credit ratings

***Business Focus***

To achieve its business objectives, focus is directed in key areas: Safe, Reliable, and Affordable Power; Utility Plant Investments; Superior Customer Experience; Environmentally Responsible Power; and Stakeholder and Community Engagement. The Company works closely with its stakeholders to ensure that resource plans and infrastructure investments benefit from robust public dialogue and balance the diverse needs of our communities. Equally important is the focus of TXNM's utilities on customer satisfaction and community engagement.

*Safe, Reliable, and Affordable Power*

Safety is the first priority of our business and a core value of the Company. TXNM utilizes a Safety Management System to provide clear direction, objectives and targets for managing safety performance and minimizing risks and empowers employees to "Be the Reason Everyone Goes Home Safe."

TXNM measures reliability and benchmark performance of PNM and TNMP against other utilities using industry-standard metrics, including System Average Interruption Duration Index and System Average Interruption Frequency Index. PNM's and TNMP's investment plans include projects designed to support reliability and reduce the amount of time customers are without power.

TXNM and its utilities are aware of the important roles they play in enhancing economic vitality in their service territories. Management believes that maintaining strong and modern electric infrastructure is critical to ensuring reliability and supporting economic growth. When contemplating expanding or relocating their operations, businesses consider energy affordability and reliability to be important factors. PNM and TNMP strive to balance service affordability with infrastructure investment to maintain a high level of electric reliability and to deliver a safe and superior customer experience. Investing in PNM's and TNMP's infrastructure is critical to ensuring reliability and meeting future energy needs. Both utilities have long-established records of providing customers with safe and reliable electric service.

PNM participates in the EIM, a real-time wholesale energy trading market operated by the CAISO, that enables participating electric utilities to buy and sell energy. The EIM aggregates the variability of electricity generation and load for multiple balancing authority areas and utility jurisdictions. In addition, the EIM facilitates greater integration of renewable resources through the aggregation of flexible resources by capturing diversity benefits from the expanding geographic footprint and the expanded potential uses for those resources. PNM passes the cost savings achieved by participating in the EIM through to customers under PNM's FPPAC. PNM also plans to join the Extended Day Ahead Market ("EDAM"), which is a voluntary day-ahead regional market that expands on CAISO's EIM market, in the fall of 2027.

PNM joined the WRAP in April 2023 to bolster PNM's preparations for times of critical need. WRAP is a first-of-its-kind program in the West that adds a region-wide coordination between power providers for assessing and addressing resource adequacy. This step helps ensure regional resource availability is visible and coordinated in the event PNM customers are critically impacted by a resource emergency. WRAP is currently in the non-binding phases of the program, which is expected to continue through the summer of 2027.

*Utility Plant Investments*

During the 2023 and 2024 periods, PNM and TNMP together invested $2.3 billion in utility plant, including transmission and distribution systems, substations, power plants, and nuclear fuel. Investment plans emphasize new investments in transmission and distribution infrastructure to support growing demand with grid reliability and resilience and to

Table of Contents

deliver clean energy. The Company has been improving the diversification of its rate base among regulatory jurisdictions, moving TNMP and FERC transmission rate base to over half of the consolidated rate base.

Investments at TNMP support the continued high growth across each region of its service territory. Economic growth across Texas continues to push the demands on TNMP's system to new levels, including a new system peak in February 2025. Additionally, the Texas legislature in 2023 passed a series of bills aimed at encouraging investments to enhance grid reliability and resilience. The PUCT has developed, and continues to develop, rules associated with the new legislation. TNMP will continue to submit filings for investments and recovery in accordance with these new rules in addition to the existing rate recovery mechanisms. In June 2025, HB 5247 added Section 36.216 to PURA, which immediately authorized certain electric utilities, like TNMP to elect to defer depreciation expenses for qualifying investments to a regulatory asset until the following year in which they would file a single, annual proceeding upon notification to the PUCT.

Investments at PNM are aimed at advancing the infrastructure beyond its original architecture to a more flexible and redundant system accommodating growing amounts of intermittent and distributed generation resources and integrating evolving technologies that provide long-term customer value. New Mexico's clean energy future depends on a reliable, resilient, secure grid to deliver an evolving mix of energy resources to customers. In addition, projects included in the Grid Modernization Plan will improve customers' ability to customize their use of energy and modernize PNM's electric grid through infrastructure and technology improvements.

See the subheading Capital Requirements included in the full discussion of Liquidity and Capital Resources below for additional discussion of the Company's projected capital requirements.

*Superior Customer Experience*

The Company strives to deliver a superior customer experience. With reliability being the primary role of a transmission and distribution service provider in Texas' deregulated market, TNMP continues to focus on keeping end-users updated about interruptions and to encourage consumer preparation when severe weather is forecasted. In 2024, TNMP made significant strides in improving customer satisfaction related to power outages by providing a more user-friendly experience on TNMP's outage map information system, making it easier for customers to access real-time outage information. In addition, TNMP introduced a new system that allows customers to receive outage alerts through multiple communication channels to enhance transparency and to ensure customers stay informed during outages. In September 2024, TNMP sent employees to assist in restoring power to those communities impacted by Hurricane Helene and in January 2025 TNMP was announced as an EEI Emergency Response Award recipient. The EEI Emergency Response Awards recognize recovery and assistance efforts of electric companies following service disruptions caused by extreme weather or other natural events.

Throughout 2024 and into 2025, PNM continues to hold in-person engagements with residential and business customers through customer advisory councils. These engagements have helped PNM to build and improve customer relationships and have provided PNM with valuable customer insights to gauge customer interest levels towards programs and services to be highly customer centric. Additionally, PNM continues to focus its efforts to enhance the customer experience through customer service improvements, including enhanced digital payment options, strategic customer outreach, and improved communications. In 2025, PNM introduced a redesigned customer bill to make it easier for customers to understand their bill as a part of a broader commitment improving transparency and usability. While the electric utility industry continues to experience declines in customer satisfaction, as measured by J.D. Power, PNM's ranking in 2025 remains stable, reflecting the Company's sustained efforts to improve the customer journey through a more seamless and customer-friendly experience. PNM continues to focus on addressing energy affordability by promoting participation in utility programs among households with high energy burden to offset high bills. PNM has implemented efforts to increase participation in low-income energy efficiency programs, providing additional aid through the PNM Good Neighbor Fund, partnering with state agencies to make it easier to access funding, improving access to clean energy through expanded outreach and communication, and the implementation of low-income transportation electrification programs. As a result of these communication efforts, 2,859 families in need have received emergency assistance through the PNM Good Neighbor Fund in the six months ended June 30, 2025.

*Environmentally Responsible Power*

TXNM has a long-standing record of environmental stewardship. PNM's environmental focus is in three key areas:

- Developing strategies to provide reliable and affordable power while transitioning to a 100% carbon-free generating portfolio by 2040
- Preparing PNM's system to meet New Mexico's increasing renewable energy requirements as cost-effectively as possible
- Increasing energy efficiency participation

Table of Contents

TXNM's corporate website (www.txnmenergy.com) includes a dedicated section providing key environmental and other information related to PNM's and TNMP's operations, including information that collectively demonstrates the Company's commitment to sustainability. This information highlights plans for PNM to be coal-free no later than 2031 and to achieve a carbon-free generating portfolio by 2040.

PNM's Grid Modernization Plan is a major step forward to providing reliable, affordable and sustainable energy. As part of that plan, PNM will promote energy equity where technology like smart meters and distribution upgrades will be provided to low-income areas first in order to allow customers to gain insights into their energy usage in order to improve affordability and create fairer access to energy. In addition, PNM's Time-of-Day pilot approved in the 2024 Rate Change final order incentivizes customers, through price signals, to use energy during the day when renewable generation is abundant.

The IRA provided benefits for TXNM and its customers by extending and enhancing clean energy incentives such as the investment tax credit and production tax credit. As the Company continues its transition away from carbon emitting sources, these credits reduce the cost of renewable investments. In addition, the IRA includes a new production tax credit for existing nuclear facilities that may create an added benefit for PNM's ownership in the carbon-free PVNGS. Other IRA provisions encourage transportation electrification with new EV credits and added incentives for vehicle charging infrastructure. In July 2025, the newly enacted OBBBA began to accelerate the phase-out of certain IRA energy tax credits and restricts the availability of credits for "foreign entities of concern."

*Electric Vehicles*

TXNM is building upon its goal of 100% carbon-free generation by 2040 with plans for additional emissions reductions through the electrification of its vehicle fleet. Growing the number of EVs within the Company's fleet will benefit the environment and lower fuel costs furthering the commitment to sustainability. Under the commitment, existing fleet vehicles will be replaced as they are retired with an increasing percentage of EVs. The goals call for 25% of all light duty fleet purchases to be electric by 2025 and 50% to be electric by 2030.

To demonstrate TXNM's commitment to increase the electrification of vehicles in its service territory, PNM implemented its first TEP in 2022 and received approval of its 2024-2026 TEP in 2024. PNM has launched new transportation electrification offerings that support customer adoption of EVs by addressing barriers to adoption. PNM's TEP program budget provides financial support to residential and non-residential customers towards the purchase of EV chargers and/or site make-ready costs, as well as customer education and outreach on EV-specific electricity rates to encourage charging during off-peak periods. More than 25% of the program budget is dedicated to low- and moderate-income customers to plan for an equitable transition to an electrified transportation sector.

PNM participates in the National Electric Highway Coalition, which plans to build fast-charging ports along major U.S. travel corridors. The coalition, with approximately 50 investor-owned electric companies, is committed to providing EV fast charging ports that will allow the public to drive EVs with confidence throughout the country's major roadways. To support this initiative, PNM's TEP program includes the installation of a charging network along major roadways in New Mexico.

*Renewable Energy and Energy Storage*

PNM's utility-owned solar and energy storage capacity, as well as solar, energy storage, wind, and geothermal procurements in service as of June 30, 2025, have a total net generation capacity of 2,779 MW. In addition to PNM's owned and third-party contracted solar facilities, PNM also has a customer distributed solar generation program that represented 320.5 MW at June 30, 2025. The NMPRC has approved plans for PNM to procure energy and RECs from additional resources to serve retail customers and a data center located in PNM's service territory. PNM's approved resources have a generation capacity of 1,360 MW. This includes approximately 310 MW of capacity under the Community Solar Act which will allow PNM to provide customers the option of accessing solar energy.

PNM will continue to seek approval to procure renewable resources while balancing the impact to customers' electricity costs in order to meet forecasted peak load requirements to serve its customers and New Mexico's escalating RPS and carbon-free resource requirements.

*Energy Efficiency*

Energy efficiency plays a significant role in helping to keep customers' electricity costs low while meeting their energy needs and is one of the Company's approaches to supporting environmentally responsible power. PNM's and TNMP's energy efficiency and load management portfolios continue to achieve robust results. In 2024, incremental energy saved as a result of new participation in PNM's portfolio of energy efficiency programs is estimated to be 86 GWh. This is equivalent to the annual consumption of approximately 11,891 homes in PNM's service territory. PNM's load management and annual energy efficiency programs also help lower peak demand requirements. In 2024, TNMP's incremental energy saved as a result of new participation in TNMP's energy efficiency programs is estimated to be approximately 16 GWh. This is equivalent to the annual consumption of approximately 2,211 homes' electricity use in TNMP's service territory using a national average avoided

Table of Contents

emissions rate. TNMP's high-performance homes residential new construction energy efficiency program has earned the Energy Star Partner of the Year award for 8 years, including 6 years receiving the Sustained Excellence Award, recognizing long-term commitment to fighting climate change and protecting public health through energy efficiency.

*Water Conservation and Solid Waste Reduction*

PNM continues its efforts to reduce the amount of fresh water used to make electricity (about 45% more efficient than in 2005). Continued growth in PNM's fleet of solar and wind energy sources, energy efficiency programs, and innovative uses of air-cooling technology have contributed to this reduction. Water usage has continued to decline as PNM has substituted less fresh-water-intensive generation resources to replace SJGS. As the Company moves forward with its mission to achieve 100% carbon-free generation by 2040, it expects that more significant water savings will be gained. Shutting down SJGS in 2022 and Four Corners in 2031 will allow the Company to reach our goals for reduced freshwater use at 80% by 2035 and 90% by 2040 from 2005 levels. Focusing on responsible stewardship of New Mexico's scarce water resources improves PNM's water-resilience in the face of persistent drought and ever-increasing demands for water to spur the growth of New Mexico's economy.

In addition to the above areas of focus, the Company is working to reduce the amount of solid waste going to landfills through increased recycling and reduction of waste. In 2024, 21 of the Company's 22 facilities met or exceeded the solid waste diversion goal of a 65% diversion rate. The Company expects to continue to do well in this area in the future.

*Stakeholder and Community Engagement*

The Company is committed to fostering relationships with its customers, stakeholders, and communities. Through outreach, collaboration, and various community-oriented programs, the Company has demonstrated a commitment to building productive relationships with stakeholders, including customers, community partners, regulators, intervenors, legislators, and shareholders. Local relationships and one-on-one communications remain two of the most valuable ways both PNM and TNMP connect with their stakeholders. Both companies maintain long-standing relationships with governmental representatives and key electricity consumers to ensure that these stakeholders are updated on Company investments and initiatives. Key electricity consumers also have dedicated Company contacts that support their important service needs.

The Company utilizes a number of communications channels and strategic content to serve and engage its many stakeholders. PNM's website provides the details of major regulatory filings, including general rate requests, as well as the background on PNM's efforts to maintain reliability, keep prices affordable, and protect the environment. TNMP's website provides information on customized energy efficiency programs and TNMP rates, in addition to other community outreach information. The Company's website is also a resource for information about PNM's operations and community outreach efforts, including plans for building a sustainable energy future for New Mexico and to transition to a carbon-free generating portfolio by 2040. PNM also leverages social media in communications with customers on various topics such as education, outage alerts, safety, customer service, and PNM's community partnerships in philanthropic projects. As discussed above, TXNM's corporate website includes a dedicated section providing additional information regarding the Company's commitment to sustainability.

TXNM has a long tradition of supporting the communities that it serves in New Mexico and Texas and is committed to fostering positive relationships with stakeholders. During the three years ended December 31, 2024, corporate giving contributed $9.0 million to tribal communities and civic, educational, environmental, low income, and economic development organizations. Additionally, the PNM Resources Foundation (the "Foundation") has provided an annual average of $1.3 million in grant funding over the past three years across New Mexico and Texas. Throughout 2024, the Foundation has focused on grants for nontraditional pathways to education and grants for the environment. These grants help nonprofits innovate or sustain programs to grow and develop their mission, develop and implement environmental programs, and provide educational opportunities. The Foundation continues to expand its matching and volunteer grant programs and the annual amount of matching donations available to each of its employees. The Foundation has also approved an increase to the amount awarded to employees, through the employee crisis management fund, who have been affected by the wildfires, floods, and hurricanes. In response to the South Fork and Salt wildfires that have caused devastation in the Ruidoso and Mescalero Apache Tribe communities, PNM and the Foundation have donated to the Ruidoso Fire Emergency Action Fund, hosted by the Community Foundation of Southern New Mexico, and to the Mescalero Apache Tribe Tribal Relief Fund. PNM is also collaborating with community foundations to help support the effort and direct funds where they are most needed. To support our team members impacted by Hurricane Beryl, the Foundation has increased the employee crisis fund, which is available to help our employees with financial support for catastrophic emergencies and basic living needs during times of crises.

TXNM recognizes its responsibility to support programs and organizations that enrich the quality of life across its service territories and seeks opportunities to further demonstrate its commitment in these areas as needs arise. In response to community needs, TXNM partners with other corporate funders to support nonprofits and small businesses. TXNM also collaborates on community projects, low-income customer assistance programs, and employee volunteerism.

Table of Contents

PNM stands out as one of the few investor-owned utilities dedicated to operating a tribal relations office, which is focused on serving and collaborating with 18 of the 23 sovereign nations in New Mexico and the Southwest. PNM created the Navajo Nation Workforce Training Scholarship Program to provide support for Navajo tribal members and to encourage the pursuit of education and training in existing and emerging jobs in the communities in which they live. PNM has invested in paid summer college engineering internship programs for American Indian students available in the greater Albuquerque area, established the PNM Pueblo Education Scholarship and Endowment to invest in higher education for Native American Indian students, and supported the development of an entrepreneur complex located in Albuquerque and operated by the Indian Pueblo Cultural Center. PNM continues to partner with the Navajo Nation in the Light up Navajo project, piloted in 2019 and modeled as a mutual aid project to connect Navajo homes without electricity to the power grid. PNM is one of 44 utilities across 16 states to participate in improving the quality of life for families by bringing electricity to over 700 homes since inception of the project. PNM has also partnered with New Mexico universities to enhance intern programs and developed a business coalition model to drive economic development through intern partnerships. PNM continues to partner with key nonprofit organizations to initiate funding and action for programs focused on diversity, equity and inclusion.

Employee volunteers are the lifeblood of a healthy corporate culture. Community giving through volunteers' time and effort is at the heart of employee engagement. Throughout 2024, the Company held large-scale volunteer events, working alongside nonprofits, schools, and vulnerable communities throughout New Mexico and Texas. More than 600 employees in both states participated in the annual "Day of Service," a workday event encouraging employee volunteerism and serving more than 50 organizations. Throughout the year, employees volunteer their time generously through independent volunteer activities and board participation. Employees strengthen community resilience by giving more than 6,000 volunteer hours each year to support the health, safety, and well-being of diverse communities.

***Financial Focus***

*Earning Authorized Returns on Regulated Businesses*

TXNM's success in accomplishing its financial objectives is highly dependent on two key factors: fair and timely regulatory treatment for its utilities and the utilities' strong operating performance. The Company has multiple strategies to achieve favorable regulatory treatment, all of which have as their foundation a focus on the basics: safety, operational excellence, and customer satisfaction, while engaging stakeholders to build productive relationships. Both PNM and TNMP seek cost recovery for their investments through general rate cases, periodic cost of service filings, and various rate riders. The rates PNM and TNMP charge customers are subject to traditional rate regulation by the NMPRC, FERC, and the PUCT. Additional information about rate filings is provided in Note 17 of the Notes to Consolidated Financial Statements in the 2024 Annual Reports on Form 10-K.

Fair and timely rate treatment from regulators is crucial to PNM and TNMP in earning their allowed returns and critical for TXNM to achieve its financial objectives. TXNM believes that earning allowed returns is viewed positively by credit rating agencies and that improvements in the Company's ratings could lower costs to utility customers.

*State Regulation and Legislation*

TNMP

In the 2023 and 2025 Texas Legislative sessions several bills were passed to support utility reliability and resiliency by encouraging and protecting utility infrastructure investments. Amongst the bills passed was DCRF legislation that adds a second filing per year and shortens the regulatory timeframe for the proceedings. Other bills include system resiliency and temporary mobile generation, which provide opportunities for added investment in TNMP's service territory and reduce uncertainty around rate recovery. Another bill directs ERCOT to develop reliability plans for the Permian Basin which could result in the need for additional investments in the West Texas service territory. Additionally, the Damaging Critical Infrastructure Bill helps protect TNMP's investments in response to criminal offenses damaging critical infrastructure facilities. HB 5247 incentivizes utilities who continue to invest in the Permian Basin territory by allowing for the deferral of depreciation expenses and carrying costs of investments in excess of 300 percent of annual depreciation, that are not currently reflected in rates, to a regulatory asset until such time a single, annual proceeding can be filed to adjust nonfuel rates. These pieces of legislation demonstrate that Texas continues to encourage utility investment and prioritizes timely rate recovery. TNMP will look to prioritize investments aligned with these measures that improve the quality of service for current and future customers.

The regulatory framework in Texas strongly encourages investments into the grid by providing timely recovery through rate mechanisms outside of general rate cases. The PUCT has approved mechanisms that allow TNMP to recover capital invested in transmission and distribution projects without having to file a general rate case. The PUCT also approved rate riders that allow TNMP to recover amounts related to energy efficiency and third-party transmission costs. TNMP also has approximately 280,000 advanced meters across its service territory, the costs of which are being recovered through base rates.

Table of Contents

PNM

The 2025 New Mexico Legislative session included several bills that were passed to support economic development, clean energy, grid modernization, and wildfire preparedness. Amongst the bills passed were the Strategic Economic Development Site Readiness Bill (the "Site Readiness Bill") and the New Mexico Finance Authority Definitions, Funds & Rates Bill (the "Power Readiness Bill").

The Site Readiness Bill creates a dedicated funding mechanism and a structured process for identifying, assessing, and preparing strategic economic development sites across the state, positioning New Mexico to compete with other states actively investing in site readiness. It appropriates approximately $24 million for the site readiness fund for site-characterization studies of proposed economic development sites and site preparations of strategic economic development sites. The Site Readiness Bill also creates the Strategic Economic Development Site Advisory Committee to advise the New Mexico Development Department ("NMEDD") in selecting sites and awarding funding.

The Power Readiness Bill reduces risk, lead times, and regulatory uncertainty in acquiring additional generation resources and in building large-scale infrastructure needed to competitively serve economic development customers that create jobs. It allows a public utility to annually increase generation capacity by up to 10% of the public utility's total system peak load. The Power Readiness Bill also shortens the time for regulatory approval of CCN filings for new, major infrastructure and allows a public utility to defer costs of economic development projects, placing them into a regulatory asset until a customer signs a contract or begins taking service.

*The New Mexico Energy Transition Act ("ETA")*

The ETA requires utilities operating in New Mexico to have renewable portfolios equal to 40% by 2025, 50% by 2030, 80% by 2040, and 100% zero-carbon energy by 2045. The ETA also allows for the recovery of undepreciated investments and decommissioning costs related to qualifying EGUs that the NMPRC has required be removed from retail jurisdictional rates, provided replacement resources to be included in retail rates have lower or zero-carbon emissions. The ETA provides for a transition from fossil-fueled generating resources to renewable and other carbon-free resources by allowing utilities to issue securitized bonds related to the retirement of certain coal-fired generating facilities to qualified investors. ETBC I issued the ETBC I Securitized Bonds in November 2023 under the provisions of the ETA.

*Grid Modernization Plan*

In October 2024, the NMPRC approved PNM's Grid Modernization Plan which will improve customers' ability to customize their use of energy and ensure that customers, including low-income customers, are a top priority and will benefit from the electricity grid consistent with the Grid Modernization Statute. PNM's plan to modernize its electricity grid through infrastructure and technology improvements also increases the efficiency, reliability, resilience, and security of PNM's electric system. The approved plan includes grid modernization investments of approximately $344 million for the first six years of a broader 11-year strategy. The approved rate rider will recover capital costs, operating expenses, and taxes associated with the investments included in the plan. In June 2025, the Grid Modernization Plan was updated to reflect an increase in investments from approximately $344 million to $367 million in the first six years and a decrease in projected operations and maintenance costs by approximately 18%.

*Integrated Resource Plan*

NMPRC rules require that investor-owned utilities file an IRP every three years. The IRP is required to cover a 20-year planning period and contain an action plan covering the first three years of that period. PNM's approved 2023 IRP maintains a continued focus on a carbon-free energy system by 2040. The plan highlights the need for the significant sustained addition of resources over the next two decades, replacing retiring or expiring capacity, meeting concurrent load growth, while reducing the carbon intensity of PNM's portfolio.

In December 2024, PNM issued its 2029-2032 RFP for at least 900 MW of new energy resources to come online between 2029 and 2032, with at least 500 MW needed by 2030 and is anticipated to identify potential replacement resources for PNM's current natural gas generation capacity as well as PNM's ownership interest in Four Corners.

*2028 Resource Application*

On November 22, 2024, PNM filed an application with the NMPRC seeking approval of two 150 MW ESAs, a 167 MW PPA for the Valencia power plant, and a CCN for a 100 MW solar facility and a 30 MW battery, with a proposed additional 20 MW option, to be available to meet summer 2028 customer needs. On March 12, 2025, PNM and intervening parties filed an unopposed comprehensive stipulation with the NMPRC which supports approval of PNM's application, including the proposed option to increase the 30 MW battery by an additional 20 MW. On May 6, 2025, the hearing examiners

Table of Contents

issued a certification of stipulation recommending approval of the unopposed stipulation and on June 26, 2025, the NMPRC approved the unopposed stipulation. This matter is now concluded.

*PNM Rate Riders and other*

The NMPRC has approved PNM recovering fuel costs through the FPPAC, as well as rate riders for renewable energy, energy efficiency, and the TEP. These mechanisms allow for more timely recovery of investments.

*FERC Regulation*

Rates PNM charges wholesale transmission customers are subject to traditional rate regulation by FERC. Rates charged to wholesale electric transmission customers, other than customers on the Western Spirit Line, are based on a formula rate mechanism pursuant to which rates for wholesale transmission service are calculated annually in accordance with an approved formula. The formula includes updating cost of service components, including investment in plant and operating expenses, based on information contained in PNM's annual financial report filed with FERC, as well as including projected transmission capital projects to be placed into service in the following year. The projections included are subject to true-up. Certain items, including changes to return on equity and depreciation rates, require a separate filing to be made with FERC before being included in the formula rate.

*Delivering At or Above Industry-Average Long-Term Earnings Growth*

TXNM's financial objective to deliver at or above industry-average long-term earnings growth enables investors to realize the value of their investment in the Company's business. Earnings growth is based on ongoing earnings, which is a non-GAAP financial measure that excludes from GAAP earnings certain non-recurring, infrequent, and other items that are not indicative of fundamental changes in the earnings capacity of the Company's operations. TXNM uses ongoing earnings to evaluate the operations of the Company and to establish goals, including those used for certain aspects of incentive compensation, for management and employees.

TXNM targets a dividend payout ratio in the 50% to 60% range of its ongoing earnings. The Board will continue to evaluate the dividend on an annual basis, considering sustainability and growth, capital planning, and industry standards.

The Board approved the following increases in the indicated annual common stock dividend:

| Approval Date | Percent Increase |
|---|---|
| December 2023 | 5.4% |
| December 2024 | 5.2% |

Under the terms of the Merger Agreement, TXNM has agreed not to declare, set aside, make or pay any dividend or other distribution, payable in cash, stock, property or otherwise, with respect to any of its equity securities, or make any other actual, constructive or deemed dividend or distribution in respect of any of its equity securities (except (i) TXNM may continue the declaration and payment of regular quarterly cash dividends on TXNM common stock for each quarterly period ending after the date of the Merger Agreement, in an amount not to exceed $0.4275 in 2025 or 2026, with usual record and payment dates for such quarterly dividends in accordance with past dividend practice, (ii) for any cash dividend or cash distribution by a wholly-owned subsidiary of TXNM to TXNM or another wholly-owned subsidiary of TXNM, and (iii) a "stub period" dividend to holders of record of TXNM common stock as of immediately prior to the Effective Time equal to the product of (1) the number of days from the record date for payment of the last quarterly dividend paid by TXNM prior to the Effective Time, multiplied by (2) a daily dividend rate determined by dividing the amount of the last quarterly dividend paid prior to the Effective Time by ninety-one ).

*Maintaining Investment Grade Credit Ratings*

The Company is committed to maintaining investment grade issuer credit ratings in order to reduce the cost of debt financing and to help ensure access to credit markets, when required. On January 15, 2024, S&P revised TXNM, PNM, and TNMP's outlook to stable from positive. See the subheading Liquidity included in the full discussion of Liquidity and Capital Resources below for the specific credit ratings for TXNM, PNM, and TNMP. All of the credit ratings issued by both Moody's and S&P on the Company's senior debt continue to be investment grade.

**Economic Factors**

*TNMP* – In the three and six months ended June 30, 2025, TNMP experienced an increase in volumetric weather normalized retail load of 5.1% and 3.2% compared to 2024. Weather normalized demand-based load, excluding retail transmission and data center consumers, increased 2.6% and 6.1% in the three and six months ended June 30, 2025 compared to

Table of Contents

2024. Data center load, including distribution and transmission, has increased 71.7% and 86.8% in the three and six months ended June 30, 2025 compared to 2024.

*PNM* – In the three and six months ended June 30, 2025, PNM experienced a decrease of 2.2% and 0.6% in weather normalized residential load. Weather normalized commercial load experienced an increase of 2.9% and 2.3% in the three and six months ended June 30, 2025 compared to 2024. In addition, PNM experienced an increase in industrial load of 20.3% and 20.4% in the three and six months ended June 30, 2025 compared to 2024.

The Company is closely monitoring the impacts on the capital markets of other macroeconomic conditions, including actions by the Federal Reserve to address inflationary concerns or other market conditions, recently enacted federal legislation, and geopolitical activity, including the potential impacts of tariffs. The Company has not experienced, nor does it expect significant negative impacts to customer usage at PNM and TNMP resulting from these economic impacts. However, if current economic conditions worsen, the Company may be required to implement additional measures such as reducing or delaying operating and maintenance expenses and planned capital expenditures.

**Results of Operations**

Net earnings attributable to TXNM were $30.5 million, or $0.32 per diluted share, in the six months ended June 30, 2025 compared to $95.2 million, or $1.05 per diluted share, in 2024. Among other things, earnings in the six months ended June 30, 2025 benefited from higher transmission and distribution rates at TNMP, higher demand-based load at TNMP, colder weather at TNMP, higher weather normalized retail load at PNM and TNMP, and increased performance by PNM's NDT, coal mine reclamation, and SJGS decommissioning investment securities. These increases were partially offset by higher operating expenses at PNM and TNMP, increased depreciation at PNM and TNMP due to increased plant in service, lower transmission margin at PNM, capacity arrangements at PNM, milder weather at PNM, and higher interest charges at PNM, TNMP, and Corporate and Other. Additional information on factors impacting results of operations for each segment is discussed below under Results of Operations.

**Liquidity and Capital Resources**

As of June 30, 2025, TXNM, PNM, and TNMP had revolving credit facilities with capacities of $300.0 million, $440.0 million, and $200.0 million. Total availability for TXNM on a consolidated basis was $565.3 million at July 25, 2025. The Company utilizes these credit facilities and cash flows from operations to provide funds for both construction and operational expenditures. TXNM also has intercompany loan agreements with each of its subsidiaries.

TXNM projects that its consolidated capital requirements, consisting of construction expenditures and dividends, will total $8.6 billion for 2025 - 2029, including amounts expended through June 30, 2025. These construction expenditures include TNMP's investments to support continued high growth in system demand across TNMP's service territories and growing encouragement for infrastructure investments from the Texas legislature to support grid reliability and resilience. PNM's capital initiatives include investments in transmission and distribution infrastructure to deliver clean energy, enhance customer satisfaction, and increase grid resilience. Construction expenditures also include investments proposed in PNM's Grid Modernization Plan and TNMP's SRP.

To fund capital spending requirements to meet growth that balances earnings goals, credit metrics, and liquidity needs, the Company has entered into a number of other financing arrangements. A complete listing of current financing arrangements is contained in Note 9 and Note 7 of the Notes to Consolidated Financial Statements in the 2024 Annual Reports on Form 10-K.

After considering the effects of these financings and the Company's short-term liquidity position as of July 25, 2025, the Company has consolidated maturities of long-term and short-term debt aggregating approximately $983.7 million through July 2026. In addition to internal cash generation, the Company anticipates that it will be necessary to obtain additional long-term financing in the form of debt refinancing, new debt issuances, and/or new equity, including those provided for under the Merger Agreement, in order to fund its capital requirements during the 2025-2029 period. The Company currently believes that its internal cash generation, existing credit arrangements, and access to public and private capital markets will provide sufficient resources to meet the Company's capital requirements for at least the next twelve months. As of June 30, 2025 and July 25, 2025, the Company was in compliance with its debt covenants.

Table of Contents

## RESULTS OF OPERATIONS

The following discussion and analysis should be read in conjunction with the Condensed Consolidated Financial Statements and Notes thereto. Trends and contingencies of a material nature are discussed to the extent known. Refer also to Disclosure Regarding Forward Looking Statements and to Part II, Item 1A. Risk Factors.

A summary of net earnings attributable to TXNM is as follows:

| | Three Months Ended June 30, | | | Six Months Ended June 30, | | |
|---|---|---|---|---|---|---|
| | 2025 | 2024 | Change | 2025 | 2024 | Change |
| | (In millions, except per share amounts) | | | | | |
| Net earnings attributable to TXNM | $ 21.6 | $ 48.0 | $ (26.4) | $ 30.5 | $ 95.2 | $ (64.7) |
| Average diluted common and common equivalent shares | 96.2 | 90.6 | 5.6 | 94.6 | 90.5 | 4.1 |
| Net earnings attributable to TXNM per diluted share | $ 0.22 | $ 0.53 | $ (0.31) | $ 0.32 | $ 1.05 | $ (0.73) |

The components of the change in net earnings attributable to TXNM are:

| | Three Months Ended June 30, 2025 | Six Months Ended June 30, 2025 |
|---|---|---|
| | (In millions) | |
| TNMP | $ (8.9) | $ (1.2) |
| PNM | (6.4) | (47.4) |
| Corporate and Other | (11.1) | (16.1) |
| Net change | $ (26.4) | $ (64.7) |

Information regarding the factors impacting TXNM's operating results by segment are set forth below.

### Segment Information

The following discussion is based on the segment methodology that TXNM's management uses for making operating decisions and assessing performance of its various business activities. See Note 2 for more information on TXNM's operating segments.

### TNMP

### Non-GAAP Financial Measures

TNMP defines utility margin as electric operating revenues less cost of energy, which consists of costs charged by third-party transmission providers. TNMP believes that utility margin provides a more meaningful basis for evaluating operations than electric operating revenues since all third-party transmission costs are passed on to consumers through a transmission cost recovery factor. Utility margin is not a financial measure required to be presented and is considered a non-GAAP measure. TNMP does not intend for utility margin to represent any financial measure as defined by GAAP however, the calculation of utility margin, as presented, most closely compares to gross margin as defined by GAAP. Reconciliations between utility margin and gross margin are presented below.

| | Three Months Ended June 30, | | | Six Months Ended June 30, | | |
|---|---|---|---|---|---|---|
| | 2025 | 2024 | Change | 2025 | 2024 | Change |
| | (In millions) | | | | | |
| Gross margin | $ 75.1 | $ 73.8 | $ 1.3 | $ 141.4 | $ 128.8 | $ 12.6 |
| Transmission and distribution costs | 10.7 | 9.7 | 1.0 | 20.4 | 18.1 | 2.3 |
| Depreciation and amortization | 34.9 | 31.0 | 3.9 | 70.1 | 61.4 | 8.7 |
| Utility margin | $ 120.8 | $ 114.5 | $ 6.3 | $ 231.9 | $ 208.4 | $ 23.5 |

Table of Contents

The following table summarizes the operating results for TNMP:

| | Three Months Ended June 30, | | | Six Months Ended June 30, | | |
|---|---|---|---|---|---|---|
| | 2025 | 2024 | Change | 2025 | 2024 | Change |
| | (In millions) | | | | | |
| Electric operating revenues | $ 164.0 | $ 154.4 | $ 9.6 | $ 313.5 | $ 283.2 | $ 30.3 |
| Cost of energy | 43.3 | 39.9 | 3.4 | 81.5 | 74.8 | 6.7 |
| Utility margin | 120.8 | 114.5 | 6.3 | 231.9 | 208.4 | 23.5 |
| Operating expenses | 37.1 | 34.1 | 3.0 | 70.4 | 66.9 | 3.5 |
| Depreciation and amortization | 34.9 | 31.0 | 3.9 | 70.1 | 61.4 | 8.7 |
| Operating income | 48.7 | 49.3 | (0.6) | 91.4 | 80.1 | 11.3 |
| Other income | 1.7 | 2.8 | (1.1) | 4.1 | 3.9 | 0.2 |
| Interest charges | (23.9) | (14.5) | (9.4) | (41.3) | (27.8) | (13.5) |
| Segment earnings before income taxes | 26.4 | 37.7 | (11.3) | 54.3 | 56.1 | (1.8) |
| Income (taxes) | (5.5) | (7.8) | 2.3 | (11.0) | (11.6) | 0.6 |
| Segment earnings | $ 21.0 | $ 29.9 | $ (8.9) | $ 43.3 | $ 44.5 | $ (1.2) |

The following table shows total sales, including the impacts of weather, by retail tariff consumer class and average number of consumers:

| | Three Months Ended June 30, | | | Six Months Ended June 30, | | |
|---|---|---|---|---|---|---|
| | 2025 | 2024 | Percentage Change | 2025 | 2024 | Percentage Change |
| Volumetric load [1] (GWh) | | | | | | |
| Residential | 837.0 | 832.5 | 0.5 % | 1,546.2 | 1,474.7 | 4.8 % |
| Commercial and other | 11.5 | 11.5 | — | 23.6 | 23.5 | 0.4 % |
| Total volumetric load | 848.5 | 844.0 | 0.5 % | 1,569.8 | 1,498.2 | 4.8 % |
| Demand-based load [2] (MW) | 9,435.8 | 8,114.9 | 16.3 % | 18,831.6 | 15,523.9 | 21.3 % |
| Average retail consumers (thousands) [3] | 281.4 | 276.5 | 1.8 % | 280.9 | 275.8 | 1.8 % |

[1] Volumetric load consumers are billed on KWh usage.
[2] Demand-based load includes consumers billed on monthly KW peak and also includes retail transmission customers that are primarily billed under rate riders.
[3] TNMP provides transmission and distribution services to REPs that provide electric service to customers in TNMP's service territories. The number of consumers above represents the customers of these REPs. Under TECA, consumers in Texas have the ability to choose any REP to provide energy.

*Operating Results – Three Months Ended June 30, 2025, compared to 2024*

The following table summarizes the significant changes to gross margin:

| | Three Months Ended June 30, 2025 Change |
|---|---|
| *Gross margin:* | (In millions) |
| Utility margin (see below) | $ 6.3 |
| Depreciation and amortization (see below) | (3.9) |
| Higher vegetation management, outside services and employee related expenses, excluding administrative costs | (1.0) |
| Other | (0.1) |
| Net Change | $ 1.3 |

Table of Contents

The following table summarizes the significant changes to utility margin:

| | Three Months Ended June 30, 2025 Change |
|---|---|
| *Utility margin:* | (In millions) |
| *Transmission rate relief/load* – Transmission cost of service rate increases in September 2024 and March 2025 more than offset by a decrease in ERCOT approved demand | $ (0.8) |
| *Distribution rate relief* – Distribution cost of service rate increases in July 2024, November 2024, and June 2025 | 6.3 |
| *Volumetric-based consumer usage/load* – Weather normalized KWh sales increased 5.1%; the number of volumetric consumers increased 1.8% | 1.3 |
| *Demand-based consumer usage/load* – Weather normalized demand-based MW sales for large commercial and industrial consumers excluding retail transmission consumers increased 2.3% | 0.6 |
| *Weather* – Milder weather in Q2 2025 | (1.1) |
| Deferral of excess deferred income tax benefits refunded through base rates | (0.3) |
| *Rate Riders and other* – Impacts of rate riders, including transmission cost recovery factor and energy efficiency rider which are partially offset in operating expenses | 0.3 |
| Net Change | $ 6.3 |

The following tables summarize the primary drivers for changes in operating expenses, depreciation and amortization, other income (deductions), interest charges, and income taxes:

| | Three Months Ended June 30, 2025 Change |
|---|---|
| *Operating expenses:* | (In millions) |
| Higher vegetation management expenses, outside services and employee related expenses | $ 2.4 |
| Higher capitalization of administrative and general expenses due to higher construction expenditures | (0.9) |
| Higher allocated depreciation and amortization expense from Corporate and Other | 0.3 |
| Higher property tax due to increased utility plant in service | 0.7 |
| Higher insurance premiums primarily related to wildfire risk | 0.8 |
| Other | (0.3) |
| Net Change | $ 3.0 |

| | |
|---|---|
| *Depreciation and amortization:* | |
| Increased utility plant in service | $ 4.5 |
| Deferred depreciation related to HB 5247 (Note 12) | (0.6) |
| Net Change | $ 3.9 |

| | |
|---|---|
| *Other income (deductions):* | |
| Higher equity AFUDC | $ 0.2 |
| Lower CIAC | (1.6) |
| Other | 0.3 |
| Net Change | $ (1.1) |

Table of Contents

| | Three Months Ended June 30, 2025 Change |
|---|---|
| *Interest charges:* | (In millions) |
| TNMP Merger Backstop Term Loan (Note 9) | $ (1.3) |
| Loss on reacquired debt | (5.3) |
| Issuance of FMBs | (4.1) |
| Repayment of FMBs | 1.5 |
| Higher interest on revolving short-term borrowings | (0.8) |
| Higher debt AFUDC | 0.8 |
| Other | (0.2) |
| Net Change | $ (9.4) |

| | |
|---|---|
| *Income (taxes) benefits:* | |
| Lower segment earnings before income taxes | $ 2.4 |
| Lower amortization of excess deferred income taxes | (0.3) |
| Other | 0.2 |
| Net Change | $ 2.3 |

*Operating Results – Six Months Ended June 30, 2025 compared to 2024*

The following table summarizes the significant changes to gross margin:

| | Six Months Ended June 30, 2025 Change |
|---|---|
| *Gross margin:* | (In millions) |
| Utility margin (see below) | $ 23.5 |
| Depreciation and amortization (see below) | (8.7) |
| Higher employee related, outside services, and vegetation management expenses, excluding administrative costs | (2.1) |
| Other | (0.1) |
| Net Change | $ 12.6 |

The following table summarizes the significant changes to utility margin:

| | Six Months Ended June 30, 2025 Change |
|---|---|
| *Utility margin:* | (In millions) |
| *Transmission rate relief/load* – Transmission cost of service rate increases in March 2024, September 2024, and March 2025 partially offset by a decrease in ERCOT approved demand | $ 3.6 |
| *Distribution rate relief* – Distribution cost of service rate increase in July 2024, November 2024, and June 2025 | 12.6 |
| *Volumetric-based consumer usage/load* – Weather normalized KWh sales increased 3.2%; the number of volumetric consumers increased 1.8% | 1.1 |
| *Demand-based consumer usage/load* – Weather normalized demand-based MW sales for large commercial and industrial consumers excluding retail transmission consumers increased 6.4% | 3.9 |
| *Leap Year* - Decrease in revenue due to additional day in 2024 | (0.3) |
| *Weather* – Colder weather in the first quarter of 2025 was partially offset by milder weather in the second quarter of 2025 | 1.3 |
| Deferral of excess deferred income tax benefits refunded through base rates | (0.2) |
| *Rate Riders and other* – Impacts of rate riders, including transmission cost recovery factor and energy efficiency rider which are partially offset in operating expenses | 1.5 |
| Net Change | $ 23.5 |

Table of Contents

The following tables summarize the primary drivers for changes in operating expenses, depreciation and amortization, other income (deductions), interest charges, and income taxes:

| | Six Months Ended June 30, 2025 Change |
|---|---|
| *Operating expenses:* | (In millions) |
| Higher employee related, outside services, and vegetation management expenses | $ 2.8 |
| Higher property taxes due to increased utility plant in service | 1.3 |
| Higher capitalization of administrative and general expenses due to higher construction expenditures | (3.7) |
| Higher allocated depreciation and amortization expense from Corporate and Other | 0.6 |
| Higher insurance premiums primarily related to wildfire risk | 2.3 |
| Other | 0.2 |
| Net Change | $ 3.5 |

| | |
|---|---|
| *Depreciation and amortization:* | |
| Increased utility plant in service | $ 9.3 |
| Deferred depreciation related to HB 5247 (Note 12) | (0.6) |
| Net Change | $ 8.7 |

| | |
|---|---|
| *Other income (deductions):* | |
| Lower CIAC | $ (0.6) |
| Higher equity AFUDC | 0.5 |
| Other | 0.3 |
| Net Change | $ 0.2 |

| | |
|---|---|
| *Interest charges:* | |
| TNMP Merger Backstop Term Loan (Note 9) | $ (1.3) |
| Loss on reacquired debt | (5.3) |
| Issuance of FMBs | (9.0) |
| Repayment of FMBs | 2.3 |
| Higher interest on revolving short-term borrowings | (1.5) |
| Higher debt AFUDC | 1.7 |
| Other | (0.4) |
| Net Change | $ (13.5) |

| | |
|---|---|
| *Income (taxes) benefits:* | |
| Lower segment earnings before income taxes | $ 0.4 |
| Lower amortization of excess deferred federal income taxes | (0.2) |
| Other | 0.4 |
| Net Change | $ 0.6 |

**PNM**

**Non-GAAP Financial Measures**

PNM defines utility margin as electric operating revenues less cost of energy, which consists primarily of fuel and purchase power costs. PNM believes that utility margin provides a more meaningful basis for evaluating operations than electric operating revenues since substantially all fuel and purchase power costs are offset in revenues as those costs are passed through to customers under PNM's FPPAC. Utility margin is not a financial measure required to be presented and is considered a non-GAAP measure. PNM does not intend for utility margin to represent any financial measure as defined by GAAP however, the calculation of utility margin, as presented, most closely compares to gross margin as defined by GAAP.

Table of Contents

Reconciliations between utility margin and gross margin are presented below.

| | Three Months Ended June 30, | | | Six Months Ended June 30, | | |
|---|---|---|---|---|---|---|
| | 2025 | 2024 | Change | 2025 | 2024 | Change |
| | (In millions) | | | | | |
| Gross margin | $ 111.4 | $ 124.7 | $ (13.3) | $ 213.7 | $ 245.6 | $ (31.9) |
| Energy production costs | 26.1 | 24.6 | 1.5 | 50.6 | 46.8 | 3.8 |
| Transmission and distribution costs | 15.8 | 15.4 | 0.4 | 31.6 | 29.7 | 1.9 |
| Depreciation and amortization | 60.8 | 54.2 | 6.6 | 120.6 | 107.5 | 13.1 |
| Utility margin | $ 214.0 | $ 218.9 | $ (4.9) | $ 416.5 | $ 429.6 | $ (13.1) |

The following table summarizes the operating results for PNM:

| | Three Months Ended June 30, | | | Six Months Ended June 30, | | |
|---|---|---|---|---|---|---|
| | 2025 | 2024 | Change | 2025 | 2024 | Change |
| | (In millions) | | | | | |
| Electric operating revenues | $ 338.4 | $ 333.7 | $ 4.7 | $ 671.8 | $ 641.8 | $ 30.0 |
| Cost of energy | 124.3 | 114.8 | 9.5 | 255.3 | 212.2 | 43.1 |
| Utility margin | 214.0 | 218.9 | (4.9) | 416.5 | 429.6 | (13.1) |
| Operating expenses | 116.6 | 106.6 | 10.0 | 227.9 | 213.0 | 14.9 |
| Depreciation and amortization | 60.8 | 54.2 | 6.6 | 120.6 | 107.5 | 13.1 |
| Operating income | 36.6 | 58.1 | (21.5) | 68.0 | 109.0 | (41.0) |
| Other income (deductions) | 26.5 | 8.3 | 18.2 | 29.8 | 33.4 | (3.6) |
| Interest charges | (32.0) | (25.9) | (6.1) | (61.8) | (51.0) | (10.8) |
| Segment earnings before income taxes | 31.2 | 40.5 | (9.3) | 36.0 | 91.4 | (55.4) |
| Income (taxes) benefit | (2.4) | (5.8) | 3.4 | (2.4) | (11.6) | 9.3 |
| Valencia non-controlling interest | (4.3) | (3.8) | (0.5) | (8.0) | (6.8) | (1.2) |
| Preferred stock dividend requirements | (0.1) | (0.1) | — | (0.3) | (0.3) | — |
| Segment earnings | $ 24.4 | $ 30.8 | $ (6.4) | $ 25.3 | $ 72.7 | $ (47.4) |

The following table shows total GWh sales, including the impacts of weather, by customer class and average number of customers:

| | Three Months Ended June 30, | | | Six Months Ended June 30, | | |
|---|---|---|---|---|---|---|
| | 2025 | 2024 | Percentage Change | 2025 | 2024 | Percentage Change |
| | (Gigawatt hours, except customers) | | | | | |
| Residential | 772.1 | 794.2 | (2.8)% | 1,544.8 | 1,570.7 | (1.6)% |
| Commercial | 899.6 | 878.5 | 2.4 | 1,752.6 | 1,726.6 | 1.5 |
| Industrial [1] | 599.2 | 500.6 | 19.7 | 1,183.7 | 985.4 | 20.1 |
| Public authority | 56.5 | 50.2 | 12.5 | 104.2 | 93.7 | 11.2 |
| Economy energy service [2] | 99.1 | 121.4 | (18.4) | 248.8 | 285.7 | (12.9) |
| Other sales for resale [3] | 1,111.6 | 1,219.5 | (8.8) | 2,008.8 | 1,973.7 | 1.8 |
| | 3,538.1 | 3,564.4 | (0.7)% | 6,842.9 | 6,635.8 | 3.1 % |
| Average retail customers (thousands) | 556.3 | 552.5 | 0.7 % | 555.9 | 551.8 | 0.7 % |

[1] Includes energy provided by PNM for renewable energy resources to match the energy and capacity requirements of Meta data center. PNM purchases renewable energy which is passed through to Meta under a rate rider. A special service rate is applied to Meta's energy consumption in those hours of the month when their consumption exceeds the energy production from the renewable resources.
[2] PNM purchases energy for a large customer on the customer's behalf and delivers the energy to the customer's location through PNM's transmission system. PNM charges the customer for the cost of the energy as a direct pass through to the customer with only a minor impact in utility margin resulting from providing ancillary services.
[3] Includes sales for resale activity resulting from PNM's participation in the EIM.

Table of Contents

*Operating Results – Three Months Ended June 30, 2025, compared to 2024*

The following table summarizes the significant changes to gross margin:

| | Three Months Ended June 30, 2025 Change |
|---|---|
| *Gross margin:* | (In millions) |
| Utility margin (see below) | $ (4.9) |
| Depreciation and amortization (see below) | (6.6) |
| Higher plant maintenance costs at Four Corners and gas fired plants, partially offset by lower costs at PVNGS | (0.9) |
| Higher employee related and outside services expenses partially offset by lower vegetation management expenses, excluding administrative costs | (0.2) |
| Other | (0.7) |
| Net Change | $ (13.3) |

The following table summarizes the significant changes to utility margin:

| | Three Months Ended June 30, 2025 Change |
|---|---|
| *Utility margin:* | (In millions) |
| *Retail customer usage/load* – Weather normalized retail KWh sales increased 2.9% for commercial customers and 20.3% for industrial customers, partially offset by decreased sales to residential customers of 2.2% | $ 1.1 |
| *Weather* – Milder weather in 2025 | (0.9) |
| *Transmission* – Increase in revenues primarily due to higher market prices in the second quarter of 2025, partially offset by lower volumes | 0.8 |
| *Capacity arrangements* – Additional energy storage agreements starting in the fourth quarter of 2024 partially offset with sales agreement in 2025 | (10.1) |
| *Rate riders and other* – Includes renewable energy, FPPAC, energy efficiency, energy transition charge, and transportation electrification riders which are partially offset in operating expenses, depreciation and amortization, other income (deductions), and interest charges | 4.2 |
| Net Change | $ (4.9) |

The following tables summarize the primary drivers for changes in operating expenses, depreciation and amortization, other income (deductions), interest charges, and income taxes:

| | Three Months Ended June 30, 2025 Change |
|---|---|
| *Operating expenses:* | (In millions) |
| Higher costs at Four Corners and gas fired plants partially offset with lower costs at PVNGS | $ 1.2 |
| Higher employee related and outside services expenses partially offset by lower vegetation management expenses | 0.5 |
| Higher insurance premiums primarily related to wildfire risk | 1.9 |
| Higher property taxes associated with increased utility plant in service | 3.3 |
| Higher allocated depreciation and amortization expense from Corporate and Other | 0.7 |
| Higher allocated charitable contributions from Corporate and Other related to the 2025 Rate Request | 1.5 |
| Higher costs associated with rate riders included in utility margin | 0.6 |
| Other | 0.3 |
| Net Change | $ 10.0 |

Table of Contents

| | Three Months Ended June 30, 2025 Change |
|---|---|
| *Depreciation and amortization:* | (In millions) |
| Increased utility plant in service | $ 5.7 |
| Amortization related to ETBC I Securitized Costs, offset in utility margin | 0.9 |
| Net Change | $ 6.6 |
| *Other income (deductions):* | |
| Increased performance on investment securities in the NDT and coal mine reclamation trusts | $ 23.0 |
| Lower interest income and higher trust expenses related to investment securities in the NDT and coal mine reclamation trust | (2.3) |
| Lower equity AFUDC | (1.3) |
| Higher non-service post-retirement benefit costs | (0.7) |
| Other | (0.5) |
| Net Change | $ 18.2 |
| *Interest charges:* | |
| Higher interest on term loans | $ (3.6) |
| Higher interest related to remarketed PCRBs in June 2024 | (0.7) |
| Issuance of SUNs in 2025 | (3.4) |
| Repayment of SUNs in 2025 | 0.5 |
| Higher interest on revolving short-term borrowings | (0.9) |
| Lower interest on transmission interconnection and security deposit arrangements | 0.8 |
| Higher debt AFUDC | 1.1 |
| Other | 0.1 |
| Net Change | $ (6.1) |
| *Income (taxes) benefits:* | |
| Lower segment earnings before income taxes | $ 2.5 |
| Higher amortization of federal excess deferred income taxes | 0.9 |
| Net Change | $ 3.4 |

*Operating Results – Six Months Ended June 30, 2025 compared to 2024*

The following table summarizes the significant changes to gross margin:

| | Six Months Ended June 30, 2025 Change |
|---|---|
| *Gross margin:* | (In millions) |
| Utility margin (see below) | $ (13.1) |
| Depreciation and amortization (see below) | (13.1) |
| Higher plant maintenance costs at Four Corners and gas fired plants, partially offset by lower costs at PVNGS | (2.6) |
| Higher employee related and outside services expenses partially offset by lower vegetation management expenses, excluding administrative costs | (1.9) |
| Other | (1.2) |
| Net Change | $ (31.9) |

Table of Contents

The following table summarizes the significant changes to utility margin:

| | Six Months Ended June 30, 2025 Change |
|---|---|
| *Utility margin:* | (In millions) |
| *Retail customer usage/load* – Weather normalized retail KWh sales increased 2.3% for commercial customers and 20.4% for industrial customers, partially offset by decreased sales to residential customers of 0.6% | $ 5.4 |
| *Weather* – Milder weather in 2025 | (1.1) |
| *Leap Year* – Decrease in revenue due to additional day in 2024 | (1.9) |
| *Transmission* – Decrease in revenues primarily due to lower market prices and lower volumes in 2025 | (1.7) |
| *Capacity arrangements* – Additional energy storage agreements starting in the fourth quarter of 2024 partially offset with sales agreement in 2025 | (20.1) |
| *Rate riders and other* – Includes renewable energy, FPPAC, energy efficiency, energy transition charge, and transportation electrification riders which are partially offset in operating expenses, depreciation and amortization, other income (deductions), and interest charges | 6.3 |
| Net Change | $ (13.1) |

The following tables summarize the primary drivers for changes in operating expenses, depreciation and amortization, other income (deductions), interest charges, and income taxes:

| | Six Months Ended June 30, 2025 Change |
|---|---|
| *Operating expenses:* | (In millions) |
| Higher costs at Four Corners and gas fired plants partially offset with lower costs at PVNGS | $ 4.8 |
| Higher employee related and outside services expenses offset by lower vegetation management expenses | 0.3 |
| Higher insurance premiums primarily related to wildfire risk | 5.0 |
| Higher property taxes associated with increased utility plant in service | 2.8 |
| Higher allocated depreciation and amortization expense from Corporate and Other | 1.3 |
| Higher allocated charitable contributions from Corporate and Other related to the 2025 Rate Request | 1.5 |
| Unrecoverable portion of San Juan Coal Mine reclamation remeasurement related to the capped surface mine liability in 2024 | (4.5) |
| Higher costs associated with rate riders included in utility margin | 3.2 |
| Other | 0.5 |
| Net Change | $ 14.9 |

| | |
|---|---|
| *Depreciation and amortization:* | |
| Increased utility plant in service | $ 11.1 |
| Amortization related to ETBC I Securitized Costs, offset in utility margin | 1.8 |
| Other | 0.2 |
| Net Change | $ 13.1 |

| | |
|---|---|
| *Other income (deductions):* | |
| Increased performance on investment securities in the NDT and coal mine reclamation trusts | $ 3.7 |
| Lower interest income and higher trust expenses related to investment securities in the NDT and coal mine reclamation trust | (2.4) |
| Lower equity AFUDC | (3.4) |
| Higher non-service post-retirement benefit costs | (1.5) |
| Net Change | $ (3.6) |

Table of Contents

| | Six Months Ended June 30, 2025 Change |
|---|---|
| *Interest charges:* | (In millions) |
| Higher interest on term loans | $ (8.3) |
| Higher interest related to remarketed PCRBs in June 2024 | (1.6) |
| Issuance of SUNs in 2025 | (3.4) |
| Repayment of SUNs in 2025 | 0.5 |
| Higher interest on revolving short-term borrowings | (2.4) |
| Lower interest on transmission interconnection and security deposit arrangements | 2.2 |
| Higher debt AFUDC | 2.0 |
| Other | 0.2 |
| Net Change | $ (10.8) |
| *Income (taxes) benefits:* | |
| Lower segment earnings before income taxes | $ 14.4 |
| Lower amortization of federal excess deferred income taxes | (4.2) |
| Other | (0.9) |
| Net Change | $ 9.3 |

**Corporate and Other**

The table below summarizes the operating results for Corporate and Other:

| | Three Months Ended June 30, | | | Six Months Ended June 30, | | |
|---|---|---|---|---|---|---|
| | 2025 | 2024 | Change | 2025 | 2024 | Change |
| | (In millions) | | | | | |
| Electric operating revenues | $ — | $ — | $ — | $ — | $ — | $ — |
| Cost of energy | — | — | — | — | — | — |
| Utility margin | — | — | — | — | — | — |
| Operating expenses | 3.1 | (7.4) | 10.5 | (4.2) | (15.8) | 11.6 |
| Depreciation and amortization | 9.5 | 9.2 | 0.3 | 19.1 | 18.7 | 0.4 |
| Operating (loss) | (12.6) | (1.7) | (10.9) | (14.8) | (2.8) | (12.0) |
| Other income (deductions) | (1.6) | (0.1) | (1.5) | (1.8) | (15.2) | 13.4 |
| Interest charges | (16.1) | (15.5) | (0.6) | (32.5) | (30.8) | (1.7) |
| Segment (loss) before income taxes | (30.3) | (17.3) | (13.0) | (49.1) | (48.8) | (0.3) |
| Income (taxes) benefit | 6.6 | 4.6 | 2.0 | 11.0 | 26.9 | (15.9) |
| Segment (loss) | $ (23.8) | $ (12.7) | $ (11.1) | $ (38.1) | $ (22.0) | $ (16.1) |

Corporate and Other operating expenses shown above are net of amounts allocated to PNM and TNMP under shared services agreements. The amounts allocated include certain expenses shown as depreciation and amortization and other income (deductions) in the table above. The change in operating expense for the three and six months ended June 30, 2025 includes increases of $11.9 million and $12.7 million in costs related to the Merger. Substantially all depreciation and amortization expense is offset in operating expenses as a result of allocation of these costs to other business segments.

Table of Contents

*Operating Results – Three Months Ended June 30, 2025 compared to 2024*

The following tables summarize the primary drivers for changes in other income (deductions), interest charges, and income taxes:

| | Three Months Ended June 30, 2025 Change |
|---|---|
| *Other income (deductions):* | (In millions) |
| Higher charitable contributions allocated to PNM | $ (1.5) |
| Net Change | $ (1.5) |

| | |
|---|---|
| *Interest charges:* | |
| Issuance of $550.0 million Convertible Notes in June 2024 | $ (6.2) |
| Higher interest on short-term borrowings | (0.2) |
| Lower interest on term loans | 5.7 |
| Other | 0.1 |
| Net Change | $ (0.6) |

| | |
|---|---|
| *Income (taxes) benefits:* | |
| Higher segment loss before income taxes | $ 3.3 |
| Impact of difference in effective tax rates used by TXNM and its subsidiaries in the calculation of income taxes in interim periods | (1.3) |
| Net Change | $ 2.0 |

*Operating Results – Six Months Ended June 30, 2025 compared to 2024*

The following tables summarize the primary drivers for changes in other income (deductions), interest charges, and income taxes:

| | Six Months Ended June 30, 2025 Change |
|---|---|
| *Other income (deductions):* | (In millions) |
| Sale of NMRD equity method investment in 2024 | $ 15.1 |
| Higher charitable contributions allocated to PNM | (1.5) |
| Other | (0.2) |
| Net Change | $ 13.4 |

| | |
|---|---|
| *Interest charges:* | |
| Issuance of $550.0 million Convertible Notes | $ (14.1) |
| Higher interest on short-term borrowings | (0.7) |
| Lower interest on term loans | 13.1 |
| Net Change | $ (1.7) |

| | |
|---|---|
| *Income (taxes) benefits:* | |
| Higher segment loss before income taxes | $ 0.1 |
| Impact of difference in effective tax rates used by TXNM and its subsidiaries in the calculation of income taxes in interim periods | (0.2) |
| Investment Tax Credits related to the sale of NMRD in 2024 | (15.7) |
| Other | (0.1) |
| Net Change | $ (15.9) |

Table of Contents

## LIQUIDITY AND CAPITAL RESOURCES

### Statements of Cash Flows

The changes in TXNM's cash flows for the six months ended June 30, 2025, compared to June 30, 2024, are summarized as follows:

| | Six Months Ended June 30, | | |
|---|---|---|---|
| | 2025 | 2024 | Change |
| | (In millions) | | |
| Net cash flows from (used in): | | | |
| Operating activities | $ 144.8 | $ 169.5 | $ (24.7) |
| Investing activities | (611.3) | (479.5) | (131.8) |
| Financing activities | 481.9 | 326.4 | 155.5 |
| Net change in cash, cash equivalents, and restricted cash | $ 15.4 | $ 16.4 | $ (1.0) |

*Cash Flows from Operating Activities*

Changes in TXNM's cash flow from operating activities result from net earnings, adjusted for items impacting earnings that do not provide or use cash. See Results of Operations above. Certain changes in assets and liabilities resulting from normal operations, including the effects of the seasonal nature of the Company's operations, also impact operating cash flows.

*Cash Flows from Investing Activities*

The changes in TXNM's cash flows used in investing activities relate primarily to changes in utility plant additions. Cash flows from investing activities include purchases and sales of investment securities in the NDT, SJGS decommissioning trust, and coal mine reclamation trusts as well as the sale of NMRD on February 27, 2024.

Major components of TXNM's cash inflows and (outflows) from investing activities are shown below:

| | Six Months Ended June 30, | | |
|---|---|---|---|
| | 2025 | 2024 | Change |
| **Cash (Outflows) for Utility Plant Additions** | (In millions) | | |
| PNM: | | | |
| Generation | $ (60.5) | $ (54.6) | $ (5.9) |
| Transmission and distribution | (200.5) | (246.0) | 45.5 |
| Nuclear fuel | (11.7) | (10.9) | (0.8) |
| | (272.7) | (311.5) | 38.8 |
| TNMP: | | | |
| Transmission | (144.1) | (79.8) | (64.3) |
| Distribution | (173.6) | (173.7) | 0.1 |
| | (317.7) | (253.5) | (64.2) |
| Corporate and Other: | | | |
| Computer hardware, software, general services, and other | (18.4) | (16.8) | (1.6) |
| | (608.8) | (581.8) | (27.0) |
| **Other Cash Flows from Investing Activities** | | | |
| Proceeds from sale of plant assets | $ — | $ 2.8 | $ (2.8) |
| Proceeds from sales of investment securities | 198.7 | 412.8 | (214.1) |
| Purchases of investment securities | (201.2) | (417.6) | 216.4 |
| Proceeds from sale of NMRD | — | 116.9 | (116.9) |
| Investments in NMRD | — | (12.6) | 12.6 |
| | (2.5) | 102.3 | (104.8) |
| Net cash flows used in investing activities | $ (611.3) | $ (479.5) | $ (131.8) |

Table of Contents

*Cash Flows from Financing Activities*

The changes in TXNM's cash flows from financing activities include:

- Short-term borrowings decreased $263.6 million in 2025 compared to an increase of $64.5 million in 2024, resulting in a net decrease in cash flows from financing activities of $328.1 million
- In 2025, TNMP issued $140.0 million aggregate principal amount of TNMP 2025A Bonds and used the proceeds to repay borrowings under the TNMP Revolving Credit Facility, to fund capital expenditures, and for other corporate purposes
- In 2025, TNMP offered to prepay an aggregate $1,505.0 million of outstanding TNMP FMBs as a result of the signing of the Merger Agreement. TNMP drew $1,084.3 million on the TNMP Merger Backstop Term Loan to fund the prepayment of the validly-tendered bonds
- In 2025, PNM entered into the PNM 2025 Term Loan for $195.0 million and used the proceeds to repay borrowings under the PNM Revolving Credit Facility, the PNM New Mexico Credit Facility, and for other corporate purposes
- In 2025, PNM issued $300.0 million aggregate principal amount of PNM 2025A SUNs and used the proceeds to repay existing indebtedness, including the $104.0 million of SUNs that were due in May 2025, to fund capital expenditures, and for other corporate purposes
- In 2025, TXNM physically settled all remaining shares under the TXNM 2024 ATM by issuing 1.1 million shares of TXNM common stock aggregating net proceeds of $49.6 million that were used to repay borrowings under the TXNM Revolving Credit Facility
- In 2025, TXNM repaid $51.0 million in borrowings under the TXNM 2021 Delayed Draw Term Loan
- In 2025, TXNM sold 8,000,000 shares of TXNM common stock in a private placement transaction aggregating $400.0 million and used the proceeds to make a cash equity contribution of $160.0 million to TNMP, to repay borrowings under the TXNM Revolving Credit Facility, and for general corporate purposes
- In 2025, TXNM sold 3,615,003 shares of TXNM common stock in a private placement transaction aggregating $200.0 million and used the proceeds to repay an equal amount of the TXNM 2023 Term Loan

**Financing Activities**

See Note 7 of the Notes to Consolidated Financial Statements in the 2024 Annual Reports on Form 10-K and Note 9 for additional information concerning the Company's financing activities. PNM must obtain NMPRC approval for any financing transaction having a maturity of more than 18 months. In addition, PNM files its annual informational financing filing and short-term financing plan with the NMPRC.

The Company's ability to access the credit and capital markets at a reasonable cost is largely dependent upon its:

- Ability to earn a fair return on equity
- Results of operations
- Ability to obtain required regulatory approvals
- Conditions in the financial markets
- Credit ratings

The Company is closely monitoring the impacts on the capital markets of other macroeconomic conditions, including actions by the Federal Reserve to address inflationary concerns or other market conditions, and geopolitical activity, including the potential impacts of tariffs. The Company currently believes it has adequate liquidity but cannot predict the effects of any of these macroeconomic conditions on the global, national, or local economy, including the Company's ability to access capital in the financial markets, or on the Company's financial position, results of operations, and cash flows.

Each of the Company's revolving credit facilities and term loans contain a single financial covenant that requires the maintenance of a debt-to-capitalization ratio. For the TXNM agreements, this ratio must be maintained at less than or equal to 70%, and for the PNM and TNMP agreements, this ratio must be maintained at less than or equal to 65%. The Company's revolving credit facilities, term loans, and other debt agreements generally also contain customary covenants, events of default, cross-default provisions, and change-of-control provisions. The Company is in compliance with its debt covenants.

In January 2025, PNM entered into the PNM 2025 Term Loan. PNM used the proceeds of the PNM 2025 Term Loan to repay borrowings under the PNM Revolving Credit Facility, the PNM New Mexico Credit Facility, and for general corporate purposes. The PNM 2025 Term Loan bears interest at a variable rate, which was 5.32% at June 30, 2025, and must be repaid on or before July 21, 2026.

In February 2025, TNMP entered into the TNMP February 2025 Bond Purchase Agreement for the sale of $140.0 million aggregate principal amount of the TNMP February 2025 Bonds. TNMP issued all $140.0 million at a 5.19%

Table of Contents

interest rate, due April 1, 2031. The proceeds were used to repay borrowings under the TNMP Revolving Credit Facility, for funding of capital expenditures, and for other corporate purposes.

In April 2025, PNM entered into the PNM April 2025 Note Purchase Agreement with institutional investors for the sale and issuance of $300.0 million aggregate principal amount of the PNM April 2025 SUNs, offered in private placement transactions. The PNM April 2025 SUNs were issued on April 23, 2025 in two series. PNM issued $125.0 million of the PNM April 2025 SUNs at 5.75%, due June 1, 2032, and another $175.0 million at 6.13%, due June 1, 2037. Proceeds from the PNM April 2025 SUNs were used for the repayment of existing indebtedness, funding of capital expenditures, and general corporate purposes.

In May 2025, TXNM paid the remaining balance due under its TXNM 2021 Delayed Draw Term Loan in accordance with its terms.

In May 2025, TXNM physically settled all shares under the TXNM 2024 ATM Program by issuing 1,104,641 shares to the forward purchasers, aggregating net proceeds of $49.6 million, including $0.5 million for equity issuance costs. TXNM used the proceeds from the settled shares to repay borrowings under the TXNM Revolving Credit Facility. Following this settlement, no additional shares of TXNM's common stock remain subject to future settlement under the TXNM 2024 ATM Program.

In May 2025, the execution of the Merger Agreement constituted a "Change of Control" under certain TXNM and TNMP debt agreements. Under each of the specified debt agreements, a "Change of Control" constitutes an "Event of Default," pursuant to which the lender parties thereto had the right to accelerate the indebtedness under the debt agreements. The definition of Change of Control under the PNM debt agreements and PNM note purchase agreements are not triggered by the execution of the Merger Agreement.

In May 2025, TXNM entered the May 2025 Stock Purchase Agreement whereby TXNM sold, in a private placement transaction, 8,000,000 shares of TXNM common stock for a purchase price of $50.00 per share (aggregating $400.0 million). The consummation of the May 2025 Stock Purchase Agreement occurred on June 2, 2025. TXNM used the proceeds to make a cash equity contribution of $160.0 million to TNMP, to repay borrowings under the TXNM Revolving Credit Facility, and for general corporate purposes.

To ensure sufficient liquidity, TXNM entered into the TXNM Merger Backstop Revolving Facility to provide liquidity in the event TXNM was unable to obtain the Lender Consents. The TXNM Merger Backstop Revolving Facility expired according to its terms as TXNM did not make any additional borrowings thereunder by the commitment termination date of May 23, 2025, and TXNM was able to obtain the necessary Lender Consents.

Concurrent with the execution of the TXNM Merger Backstop Revolving Facility, TNMP entered into the TNMP Merger Backstop Term Loan to provide liquidity to repurchase TNMP's FMBs that were tendered for prepayment pursuant to the Offer (defined below). Borrowings under the TNMP Merger Backstop Term Loan were short-term in nature and bore interest at a variable rate, which was 5.42% at June 30, 2025. On July 21, 2025 TNMP issued the TNMP July 2025 FMBs and used the proceeds to repay the outstanding principal balance under the TNMP Merger Backstop Term Loan on July 22, 2025, terminating that agreement. As TNMP demonstrated the intent and ability to refinance this short-term obligation prior to the issuance of this Form 10-Q, the obligation that existed as of June 30, 2025 has been presented as long-term debt on the Condensed Consolidated Balance Sheets.

The documents governing an aggregate $1,505.0 million of TNMP's outstanding FMBs obligated TNMP to offer (the "Offer"), within 30 business days following the signing of the Merger Agreement, to prepay all outstanding TNMP FMBs at 100% of the principal amount, plus accrued and unpaid interest thereon, but without any make-whole amount or other premium. On June 14, 2025, the Offer expired and $1,084.3 million in aggregate principal amount of the bonds were validly tendered. On June 24, 2025, holders whose bonds were validly tendered and accepted for purchase received 100% of the aggregate principal amount of bonds prepaid plus accrued and unpaid interest using funds drawn under the TNMP Merger Backstop Term Loan. The documents governing the TNMP FMBs currently require TNMP to make another offer, within 30 business days of closing of the Merger, to prepay all the remaining outstanding TNMP FMBs at par. TNMP will make such offer to prepay the TNMP FMBs in accordance with the terms of the TNMP FMBs; however, holders of the TNMP FMBs are not required to tender their TNMP FMBs and may accept or reject such offer to prepay.

The information in this Form 10-Q is for informational purposes only and is neither an offer to purchase, nor a solicitation of an offer to sell, subscribe for or buy any securities in any jurisdiction pursuant to the proposed transactions or otherwise, nor shall there be any sale, issuance or transfer of securities in any jurisdiction in contravention of applicable law. Similar to the offer to prepay made after signing the Merger Agreement, the post-Merger closing offer to prepay the TNMP FMBs will be made only pursuant to an offer to prepay, which will set forth the terms and conditions of the offer to prepay.

Table of Contents

In June 2025, TXNM entered into the June 2025 Stock Purchase Agreement whereby TXNM sold and the purchasers named therein agreed to purchase 3,615,003 shares of TXNM common stock for a purchase price of $55.325 per share (for an aggregate amount of approximately $200 million). The closing of the issuance occurred on June 27, 2025. TXNM used the proceeds to repay an equal amount due under the TXNM 2023 Term Loan. TXNM has granted the purchasers customary registration rights with respect to the shares, pursuant to which TXNM is required to register such shares for resale with the SEC no later than five business days after TXNM files this Form 10-Q for the quarterly period ending June 30, 2025.

On July 21, 2025, TNMP entered into the TNMP July 2025 Bond Purchase Agreement with institutional investors for the sale of $1,084.3 million aggregate principal amount of six series of TNMP July 2025 FMBs offered in private placement transactions. The proceeds were used to repay borrowings under the TNMP Merger Backstop Term Loan. See Note 9 for the terms of the TNMP July 2025 FMBs.

On July 31, 2025, PNM entered into the PNM July 2025 Note Purchase Agreement with institutional investors for the sale and issuance of $350.0 million aggregate principal amount of two series of the PNM July 2025 SUNs offered in private placement transactions. PNM used the proceeds from the PNM July 2025 SUNs to repay the PNM $250.0 million SUNs and for general corporate purposes. See Note 9 for the terms of the PNM July 2025 SUNs. As PNM demonstrated the intent and ability to refinance the obligation due under the PNM $250.0 million SUNs prior to the issuance of this Form 10-Q, as of June 30, 2025 this has been presented as Long-term Debt on the Condensed Consolidated Balance Sheets.

**Capital Requirements**

TXNM's total capital requirements consist of construction expenditures and cash dividend requirements for TXNM common stock and PNM preferred stock.

Key activities in TXNM's current construction program include:

- Investing in transmission and distribution infrastructure
- Upgrading generation resources and delivering clean energy
- Purchasing nuclear fuel

Projected capital requirements, including amounts expended through June 30, 2025, are:

| | 2025 | 2026-2029 | Total |
|---|---|---|---|
| | | (In millions) | |
| Construction expenditures | $ 1,321.3 | $ 6,513.0 | $ 7,834.3 |
| Dividends on TXNM common stock | 151.0 | 611.3 | 762.3 |
| Dividends on PNM preferred stock | 0.5 | 2.1 | 2.6 |
| Total capital requirements | $ 1,472.8 | $ 7,126.4 | $ 8,599.2 |

The construction expenditure estimates are under continuing review and subject to ongoing adjustment, as well as to Board review and approval. The construction expenditures above include TNMP's investments to support continued high growth in system demand across TNMP's service territories and growing encouragement for infrastructure investments from the Texas legislature to support grid reliability and resilience. PNM's capital initiative that includes investments in transmission and distribution infrastructure to deliver clean energy, enhance customer satisfaction, and increase grid resilience. Construction expenditures also include investments in PNM's Grid Modernization Plan and TNMP's SRP. These investments provide for a more resilient, reliable, efficient, and decarbonized electric system. Not included in the table above are incremental expenditures for new customer growth in New Mexico and Texas, and other transmission and renewable energy expansion in New Mexico. The ability of TXNM to pay dividends on its common stock is dependent upon the ability of PNM and TNMP to pay dividends to TXNM and the Merger (See Note 17). See Note 6 of the Notes to the Consolidated Financial Statements in the 2024 Annual Reports on Form 10-K for a discussion of regulatory and contractual restrictions on the payment of dividends by PNM and TNMP.

During the six months ended June 30, 2025, TXNM met its capital requirements and construction expenditures through cash generated from operations, as well as its liquidity arrangements and the borrowings discussed in Financing Activities above.

In addition to the capital requirements for construction expenditures and dividends, the Company has long-term debt and term loans that must be paid or refinanced at maturity. PNM has $3.5 million and $3.6 million in scheduled principal payments due for the ETBC I Securitized Bonds in August 2025 and February 2026. PNM also has $200.0 million under the PNM 2024 Term Loan due in November 2025 and $195.0 million under the PNM 2025 Term Loan due in July 2026. TXNM has $210.0 million under the TXNM 2023 Term Loan due in June 2026. See Note 9 and Note 7 of the Notes to Consolidated Financial Statements in the 2024 Annual Reports on Form 10-K for additional information about the Company's long-term debt

Table of Contents

and equity arrangements. The Company may also enter into new arrangements similar to the existing agreements, borrow under the revolving credit facilities, or issue new long-term debt or equity in the public or private capital markets, or a combination of these sources. The Company has from time to time refinanced or repurchased portions of its outstanding debt before scheduled maturity. Depending on market conditions, the Company may refinance other debt issuances or make additional debt repurchases in the future.

**Liquidity**

TXNM's liquidity arrangements include the $300.0 million TXNM Revolving Credit Facility, the $400.0 million PNM Revolving Credit Facility, and the $200.0 million TNMP Revolving Credit Facility. Each of these facilities matures on March 30, 2029 and contains two one-year extension options that, if exercised, would extend the maturity to March 2031, subject to approval by a majority of the lenders. PNM also has the $40.0 million PNM New Mexico Credit Facility with a maturity of May 20, 2026. On July 25, 2025, PNM amended its PNM New Mexico Credit Facility to, among other things, extend the maturity to May 31, 2030. Variable interest rates under the TXNM, PNM, and TNMP revolving credit facilities are based on SOFR. The Company believes the terms and conditions of these facilities are consistent with those of other investment grade revolving credit facilities in the utility industry. The Company expects that it will be able to extend or replace these credit facilities under similar terms and conditions prior to their expirations.

The revolving credit facilities and the PNM New Mexico Credit Facility provide short-term borrowing capacity. The revolving credit facilities also allow letters of credit to be issued. Letters of credit reduce the available capacity under the facilities. The Company utilizes these credit facilities and cash flows from operations to provide funds for both construction and operational expenditures. The Company's business is seasonal with more revenues and cash flows from operations being generated in the summer months. In general, the Company relies on the credit facilities to be the initial funding source for construction expenditures. Accordingly, borrowings under the facilities may increase over time. Depending on market and other conditions, the Company will periodically issue long-term debt and use the proceeds to reduce the borrowings under the credit facilities or refinance other debt. Information regarding the range of borrowings for each facility is as follows:

| | Three Months Ended June 30, 2025 | | Six Months Ended June 30, 2025 | |
|---|---|---|---|---|
| **Range of Borrowings** | **Low** | **High** | **Low** | **High** |
| | (In millions) | | | |
| PNM: | | | | |
| PNM Revolving Credit Facility | $ — | $ 293.7 | $ — | $ 325.2 |
| PNM New Mexico Credit Facility | 20.0 | 40.0 | 20.0 | 40.0 |
| TNMP Revolving Credit Facility | — | 199.4 | — | 200.0 |
| TXNM Revolving Credit Facility | — | 258.0 | — | 258.0 |

At June 30, 2025, the weighted average interest rates were 5.66% for the PNM Revolving Credit Facility, 5.67% for the PNM New Mexico Credit Facility, and 5.92% for the TXNM Revolving Credit Facility. There were no outstanding borrowings under the TNMP Revolving Credit Facility.

The Company currently believes that its capital requirements for at least the next twelve months can be met through internal cash generation, existing, extended, or new credit arrangements, and access to public and private capital markets as discussed above and in Note 9. The Company anticipates that additional long-term financing, in the form of debt and/or equity issuances, will be necessary to fund its capital requirements and to balance its capital structure during the 2025-2029 period. To cover the difference in the amounts and timing of internal cash generation and cash requirements, the Company intends to use short-term borrowings under its current and future liquidity arrangements or other short-term loans. Market conditions, such as rising interest rates, may raise the cost of borrowing under the Company's current and future liquidity arrangements or other variable debt. In addition, if market conditions worsen, the Company may not be able to access the capital markets or renew credit facilities when they expire. Should that occur, the Company would seek to improve cash flows by reducing capital expenditures and exploring other available alternatives.

Table of Contents

As of July 25, 2025, ratings on the Company's securities were as follows:

| | TXNM | PNM | TNMP |
|---|---|---|---|
| S&P | | | |
| Issuer rating | BBB | BBB | BBB+ |
| Senior secured debt | * | * | A |
| Senior unsecured debt | BBB- | BBB | * |
| Junior subordinated debt | BB+ | * | * |
| Preferred stock | * | BB+ | * |
| Moody's | | | |
| Issuer rating | Baa3 | Baa2 | Baa1 |
| Senior secured debt | * | * | A2 |
| Senior unsecured debt | Baa3 | Baa2 | * |
| Junior subordinated debt | Ba1 | * | * |
| * Not applicable | | | |

In its June 2025 credit opinion, Moody's commented that the announced terms of the proposed Merger are not expected to adversely affect the ratings or outlooks of TXNM or its two utility subsidiaries. Investors are cautioned that a security rating is not a recommendation to buy, sell, or hold securities, that each rating is subject to revision or withdrawal at any time by the rating organization, and that each rating should be evaluated independently of any other rating.

A summary of liquidity arrangements as of July 25, 2025, is as follows:

| | PNM | TNMP | TXNM Separate | TXNM |
|---|---|---|---|---|
| | (In millions) | | | |
| Financing capacity: | | | | |
| Revolving Credit Facility | $ 400.0 | $ 200.0 | $ 300.0 | $ 900.0 |
| PNM New Mexico Credit Facility | 40.0 | — | — | 40.0 |
| Total financing capacity | 440.0 | 200.0 | 300.0 | 940.0 |
| Amounts outstanding as of July 25, 2025: | | | | |
| Revolving Credit Facility | 231.8 | 14.3 | 85.5 | 331.6 |
| PNM New Mexico Credit Facility | 40.0 | — | — | 40.0 |
| Letters of credit | — | — | 3.1 | 3.1 |
| Total short-term debt and letters of credit | 271.8 | 14.3 | 88.6 | 374.7 |
| Remaining availability as of July 25, 2025 | $ 168.2 | $ 185.7 | $ 211.4 | $ 565.3 |
| Invested cash as of July 25, 2025 | $ — | $ — | $ 0.9 | $ 0.9 |

In addition to the above, TXNM has $30.3 million of letters of credit issued under the WFB LOC Facility. See Note 9. The above table excludes intercompany debt. As of July 25, 2025, neither PNM or TNMP had any borrowings from TXNM under their respective intercompany loan agreements. TXNM had $1.7 million of intercompany borrowings from PNMR Development as of July 25, 2025. The remaining availability under the revolving credit facilities at any point in time varies based on a number of factors, including the timing of collections of accounts receivables and payments for construction and operating expenditures.

TXNM has an automatic shelf registration that provides for the issuance of various types of debt and equity securities that expires February 2028. PNM has a shelf registration statement for up to $650.0 million of SUNs that expires in May 2026.

**Other Material Cash Requirements**

TXNM, PNM, and TNMP have contractual obligations for long-term debt, minimum lease payments, coal contracts, coal mine reclamation, nuclear decommissioning, SJGS plant decommissioning, pension and retiree medical contributions, and other long-term obligations. See MD&A – Other Material Cash Requirements in the 2024 Annual Reports on Form 10-K.

**Contingent Provisions of Certain Obligations**

As discussed in the 2024 Annual Reports on Form 10-K, TXNM, PNM, and TNMP have a number of debt obligations and other contractual commitments that contain contingent provisions. Some of these, if triggered, could affect the liquidity of

Table of Contents

the Company. In the unlikely event that the contingent requirements were to be triggered, TXNM, PNM, or TNMP could be required to provide security, immediately pay outstanding obligations, or be prevented from drawing on unused capacity under certain credit agreements. The contingent provisions also include contractual increases in the interest rate charged on certain of the Company's short-term debt obligations in the event of a downgrade in credit ratings. The Company believes its financing arrangements are sufficient to meet the requirements of the contingent provisions. No conditions have occurred that would result in any of the above contingent provisions being implemented.

**Capital Structure**

The capitalization tables below include the current maturities of long-term debt but does not include short-term debt or lease obligations as debt.

| | June 30, 2025 | December 31, 2024 |
|---|---|---|
| **TXNM** | | |
| TXNM common equity | 37.9 % | 33.9 % |
| Preferred stock of subsidiary | 0.1 | 0.2 |
| Long-term debt [1] | 62.0 | 65.9 |
| Total capitalization | 100.0 % | 100.0 % |
| **PNM** | | |
| PNM common equity | 43.1 % | 46.4 % |
| Preferred stock | 0.2 | 0.2 |
| Long-term debt | 56.7 | 53.4 |
| Total capitalization | 100.0 % | 100.0 % |
| **TNMP** | | |
| Common equity | 50.8 % | 48.3 % |
| Long-term debt | 49.2 | 51.7 |
| Total capitalization | 100.0 % | 100.0 % |

[1] TXNM's long-term debt as of June 30, 2025 includes Convertible Notes (Note 9), which receive 50% equity credit from ratings organizations.

## OTHER ISSUES FACING THE COMPANY

**Climate Change Issues**

*Background*

For the past several years, management has identified multiple risks and opportunities related to climate change, including the impacts of severe weather events, potential environmental regulation, technological innovation, and availability of fuel and water for operations, as among the most significant risks facing the Company. Accordingly, these risks are overseen by the Board in order to facilitate more integrated risk and strategy oversight and planning. Board oversight includes understanding the various challenges and opportunities presented by these risks, including the financial consequences that might result from enacted and potential federal and/or state regulation of GHG; plans to mitigate these risks; and the impacts these risks may have on the Company's strategy. In addition, the Board approves certain procurements of grid modernization technologies and replacement resources.

Management is also responsible for assessing significant risks, developing and executing appropriate responses, and reporting to the Board on the status of risk activities. For example, management periodically updates the Board on the implementation of corporate environmental policy, and the Company's environmental management systems, including the promotion of energy efficiency programs, and the use of renewable resources. The Board is also informed of the Company's practices and procedures to assess the impacts of operations on the environment. The Board considers issues associated with climate change, the Company's GHG exposures, and the financial consequences that might result from enacted and potential federal and/or state regulation of GHG. Management has published, with Board oversight, a Climate Change Report available at https://www.txnmenergy.com/sustainability/environment/climate_change_report that details the Company's efforts to transition to a carbon-free generating portfolio by 2040.

As part of management's continuing effort to monitor climate-related risks and assess opportunities, the Company has advanced its understanding of climate change by participating in the "2 Degree Scenario" planning by participating in the Electric Power Research Institute ("EPRI") Understanding Climate Scenarios & Goal Setting Activities program. The program focused on characterizing and analyzing the relationship of individual electric utility company's carbon emissions and global temperature goals. Activities included analyzing the scientific understanding of global emissions pathways that are consistent with limiting global warming and providing insight to assist companies in developing approaches to climate scenario planning. As PNM expands its sustainability efforts, EPRI's environmental and climate analysis programs have also been useful in

Table of Contents

gaining a better understanding of energy and environmental policy and regulations, advanced clean energy technologies, decarbonization trends and climate impacts. In 2022, PNM joined EPRI's Climate READi program which is a strategic initiative convening a global collaborative of electric utilities, thought leaders, scientific researchers and other key stakeholders to strengthen the power sector's collective approach to managing climate risk to the power system. The program is a three-year initiative, through work across three concurrent workstreams, and PNM will benefit from the development of a first-of-its-kind comprehensive framework for managing physical climate risk and investment prioritization that is scheduled to launch in May 2025.

The Company cannot anticipate or predict the potential long-term effects of climate change or climate change related regulation on its results of operations, financial position, or cash flows.

*Greenhouse Gas Emissions Exposures*

In 2024, GHG emissions associated with PNM's interests in its fossil-fueled generating plants included approximately 1.5 million metric tons of $CO_2$, which comprises the vast majority of PNM's GHG emissions.

As of June 30, 2025, approximately 28% of PNM's generating capacity, including resources owned, leased, under PPAs or ESAs, all of which is located within the U.S., consisted of coal or gas-fired generation that produces GHG emissions. As PNM shifts its generation to cleaner energy resources, the Company's output of GHG emissions continues to decrease. Many factors affect the amount of GHG emitted, including total electricity sales, plant performance, economic dispatch, and the availability of renewable resources. For example, wind generation performance from PNM's largest single renewable energy resource, New Mexico Wind, varies each year as a result of highly seasonal wind patterns and annual wind resource variability. Similarly, if PVNGS experienced prolonged outages or if PNM's entitlement from PVNGS were reduced, PNM might be required to utilize other power supply resources such as gas-fired generation, which could increase GHG emissions.

PNM has several programs underway to reduce or offset GHG emissions from its generation resource portfolio, thereby reducing its exposure to climate change regulation. PNM shut down SJGS Units 2 and 3 as part of its strategy to address the regional haze requirements of the CAA. The shutdown of SJGS Units 2 and 3 resulted in a reduction of GHG emissions for the entire station of approximately 54% for 2018, reflecting a reduction of 32% of GHG emissions from the Company's owned interests in SJGS, below 2005 levels. PNM shut down the remaining SJGS Units 1 and 4 on June 30, 2022 and September 30, 2022, respectively, resulting in additional reductions GHG emissions. Retiring PNM's share of SJGS in 2022 resulted in a GHG emissions reduction from 2021 levels of 67% of PNM's GHG emissions based upon 2021 GHG emissions from generation.

PNM's utility-owned solar and energy storage capacity, as well as solar, energy storage, wind, and geothermal procurements in service as of June 30, 2025 have a total net generation capacity of 2,779 MW. The NMPRC has approved plans for PNM to procure energy and RECs from additional resources to serve retail customers and a data center located in PNM's service territory. PNM's approved resource plans have a generation capacity of 1,360 MW. This includes approximately 310 MW of capacity under the Community Solar Act which will allow PNM to provide customers the option of accessing solar energy. PNM will continue to seek approval to procure renewable resources while balancing the impact to customers' electricity costs in order to meet forecasted peak load requirements to serve its customers and New Mexico's escalating RPS and carbon-free resource requirements.

PNM also has a customer distributed solar generation program that represented 320.5 MW at June 30, 2025. PNM's distributed solar programs will generate an estimated 641.0 GWh of emission-free solar energy available this year to offset PNM's annual production from fossil-fueled electricity generation. PNM has offered its customers a comprehensive portfolio of energy efficiency and load management programs since 2007. PNM's cumulative savings from these programs were an estimated 8,227 GWh of electricity through 2024. PNM projects energy efficiency and load management programs between 2025 and 2039 will provide the equivalent of approximately 11,900 GWh of electricity savings, which will avoid approximately 1.2 million tons of $CO_2$ based upon projected emissions from PNM's portfolio of resources. These estimates are subject to change because of the uncertainty of many of the underlying variables, including changes in PNM's generation portfolio, demand for electricity, energy efficiency, and complex relationships between those variables.

Because of PNM's dependence on fossil-fueled generation, legislation or regulation that imposes a limit or cost on GHG could impact the cost at which electricity is produced. While PNM expects to recover any such costs through rates, the timing and outcome of proceedings for cost recovery are uncertain. In addition, to the extent that any additional costs are recovered through rates, customers may reduce their usage, relocate facilities to other areas with lower energy costs, or take other actions that ultimately could adversely impact PNM.

*Other Climate Change Risks*

PNM's generating stations are located in the arid southwest. Access to water for cooling for some of these facilities is critical to continued operations. Forecasts for the impacts of climate change on water supply in the southwest range from reduced precipitation to changes in the timing of precipitation. In either case, PNM's generating facilities requiring water for

Table of Contents

cooling will need to mitigate the impacts of climate change through adaptive measures. Current measures employed by PNM generating stations include the use of sustainable, less variable groundwater supplies, and investments in technologies such as air cooling and cooling water recycling. These types of actions will continue to be important to sustain operations.

PNM's service areas occasionally experience periodic high winds and severe thunderstorms. TNMP has operations in the Gulf Coast area of Texas, which experiences periodic hurricanes and other extreme weather conditions. In addition to potentially causing physical damage to Company-owned facilities, which disrupts the ability to transmit and/or distribute energy, weather and other events of nature can temporarily reduce customers' usage and demand for energy. In addition, other events influenced by climate change, such as wildfires, could disrupt Company operations or result in third-party claims against the Company. PNM has enhanced its wildfire prevention efforts and maintains a wildfire mitigation plan and a public safety power shutoff plan. TNMP has also developed a wildfire mitigation plan. However, both PNM and TNMP remain at risk for wildfires outside of their control and the resulting damages in their service areas.

*EPA Regulation*

In 2007, the U.S. Supreme Court held that EPA has the authority to regulate GHG emissions under the CAA, and in 2009, EPA released its endangerment finding for GHG from new motor vehicles, stating that the atmospheric concentrations of six key greenhouse gases ($CO_2$, methane, nitrous oxides, hydrofluorocarbons, perfluorocarbons, and sulfur hexafluoride) endanger the public health and welfare. These actions triggered new GHG permitting requirements for stationary sources, including the energy industry, under the Prevention of Significant Deterioration ("PSD") and Title V program, although the U.S. Supreme Court held the CAA does not authorize EPA to require a source to obtain a PSD permit solely on the basis of its potential GHG emissions.

EPA also determined that its finding of endangerment requires it to issue performance standards under Section 111 of the CAA to regulate GHG emissions from new and existing stationary sources, including fossil fuel fired EGUs. Accordingly, in 2015, EPA issued Carbon Pollution Standards for new, modified, and reconstructed power plants (under Section 111(b)) and the Clean Power Plan for existing power plants (under Section 111(d)).

Multiple states, utilities, and trade groups challenged both the Carbon Pollution Standards for new sources and the Clean Power Plan for existing sources in separate cases, and the challengers successfully petitioned the U.S. Supreme Court for a stay of the Clean Power Plan.

In 2019, EPA repealed the Clean Power Plan, promulgated the ACE Rule, and revised the implementing regulations for all emission guidelines issued under CAA Section 111(d). The ACE Rule was also challenged, and on January 19, 2021, the DC Circuit issued an opinion in American Lung Association and American Public Health Association v. EPA, et al. vacating the ACE Rule.

Numerous parties sought review by the U.S. Supreme Court and on June 30, 2022, the Court held that the "generation shifting" approach in the Clean Power Plan exceeded the powers granted to EPA by Congress, though the Court did not address the related issue of whether Section 111 of the CAA only authorizes EPA to require measures that can be implemented entirely within the fence line at an individual source. Of broader significance in administrative law, the Court's opinion expressly invoked the major questions doctrine, which requires rules involving issues of "vast economic or political significance," to be supported by clear statutory authorization. In cases where there is no clear statement of authority, courts need not defer to the agency's statutory interpretation on "major questions." The decision sets legal precedent for future rulemakings by EPA and other federal regulatory agencies whereby the agency's authority may be limited based upon similar reasoning.

The litigation over the Carbon Pollution Standards remains held in abeyance but could be reactivated by the parties upon a determination by the court that reconsideration of the rule has concluded.

In 2024, EPA adopted regulatory actions under CAA Sections 111(b) and (d) to replace the Clean Power Plan and the ACE Rule. The final rules include revised new source performance standards under Section 111(b) for all new natural gas-fired combustion turbines and emission guidelines under Section 111(d) requiring states to develop standards of performance for GHG emissions from existing fossil-fuel-fired electric steam generating units. In the final rules, EPA determined that the standards for existing coal- or gas-fired steam generating units must be based on the use of either CCS (long-term), natural gas co-firing (medium-term), or exempt from the rule via early retirement. The standards for new combustion turbines must be based on CCS (base load), efficient simple cycle design (intermediate load), or lower-emitting fuels (low load). Over a dozen states, several industry groups and some power companies and labor unions filed challenges to the rule at the DC Circuit, which heard oral arguments on December 6, 2024.

On January 20, 2025, President Trump signed an executive order entitled "Unleashing American Energy" directing all agencies, including EPA, to review all agency actions and suspend, revise, or rescind those identified as imposing an undue burden on domestic energy resources. The order also disbands the Interagency Working Group on the Social Cost of Greenhouse Gases, eliminates the "social cost of carbon" from consideration in any Federal permitting or regulatory decision,

Table of Contents

and expressly directs EPA to submit joint recommendations on the legality and continuing applicability of the 2009 endangerment finding for greenhouse gases that currently provides the legal basis for EPA to regulate greenhouse gases under the CAA. On March 12, 2025, EPA announced it will formally reconsider the 2009 endangerment finding in collaboration with the OMB and other relevant agencies. On June 17, 2025, EPA published a two-part proposed rule in the Federal Register to repeal and revise the GHG emission standards for EGUs. EPA primarily proposes to find that GHG emissions from fossil fuel-fired power plants "do not contribute significantly to dangerous air pollution" under the meaning of CAA Section 111, which would preclude EPA from regulating GHG emissions from those plants. As a result, EPA is proposing to repeal all GHG standards for the power sector promulgated under CAA Section 111 in both 2015 and 2024. EPA also proposed in the alternative to find that CCS is not adequately demonstrated and that neither CCS nor gas co-firing are the best system of emission reduction for GHG emissions from power plants, which findings also support repeal of those specific requirements from the rules adopted in 2024. Comments are due by August 7, 2025 and EPA intends to finalize the proposed rule by the end of 2025.

*Federal Legislation*

In July 2025, President Trump signed the OBBBA, significantly altering the landscape of climate action and clean energy initiatives in the United States. The legislation revises and, in some cases, phases out tax credits established under the IRA and also includes restrictions on the availability of credits for "foreign entities of concern." It is uncertain under the new Trump Administration, given the control of both houses of Congress by the Republican Party, what additional Federal legislation on climate change is expected during this Congress.

*State and Regional Activity*

Pursuant to New Mexico law, each utility must submit an IRP to the NMPRC every three years to evaluate renewable energy, energy efficiency, load management, distributed generation, and conventional supply-side resources on a consistent and comparable basis. The IRP is required to take into consideration risk and uncertainty of fuel supply, price volatility, and costs of anticipated environmental regulations when evaluating resource options to meet supply needs of the utility's customers. The NMPRC requires that New Mexico utilities factor a standardized cost of carbon emissions into their IRPs using prices ranging between $8 and $40 per metric ton of $CO_2$ emitted and escalating these costs by 2.5% per year. Under the NMPRC order, each utility must analyze these standardized prices as projected operating costs. Reflecting the evolving nature of this issue, the NMPRC order states that these prices may be changed in the future to account for additional information or changed circumstances. Although these prices may not reflect the costs that ultimately will be incurred, PNM is required to use these prices for purposes of its IRP. PNM's 2023 filing has a continued focus on a carbon-free energy system by 2040. The plan highlights the need for the significant sustained addition of resources over the next two decades, replacing retiring or expiring capacity, meeting concurrent load growth, while reducing the carbon intensity of PNM's portfolio.

The ETA, among other things, requires that investor-owned utilities obtain specified percentages of their energy from renewable and carbon-free resources. The ETA requires utilities operating in New Mexico to have renewable portfolios equal to 40% by 2025, 50% by 2030, 80% by 2040, and 100% zero-carbon energy by 2045. Under the ETA provisions, PNM will also be required to meet a generation emission standard of no more than 400 lbs. of $CO_2$ per MWh beginning in 2023 and not more than 200 lbs. per MWh beginning in 2032. PNM takes this requirement into account in its resource planning and will manage compliance with the standards based upon existing generation resources and approved resource retirements and replacements. The ETA provides for a transition from fossil-fuel generating resources to renewable and other carbon-free resources by allowing investor-owned utilities to issue securitized bonds related to the retirement of coal-fired generating facilities to qualified investors.

The ETA has a significant impact on PNM's future generation portfolio. In 2022, in compliance with the ETA, the NMED announced a new rulemaking, Carbon Dioxide Emission Standards for Electric Generating Facilities, to develop carbon emission standards for new and existing electric coal-fired generating facilities. In 2022, the rule was passed which adopts new carbon emission standards for new and existing coal-fired power plants. In compliance with the ETA, PNM filed its first $CO_2$ Emissions Measurement and Compliance Annual Report on March 14, 2025.

In 2020, the NMPRC approved PNM's San Juan abandonment application and for the issuance of securitized bonds consistent with the requirements of the ETA and in 2023 PNM issued the ETBC I Securitized Bonds. PNM cannot predict the full impact of the ETA with respect to Four Corners.

The State of California has enacted comprehensive climate-related disclosure laws that will require large entities doing business in the state to measure and disclose Scope 1 and Scope 2 GHG emissions beginning in 2026, Scope 3 GHG emissions beginning in 2027, and to publish biennial reports detailing climate-related financial risk beginning in January 2026. The State of California has yet to issue implementing regulations for its laws, and we are closely monitoring developments to determine if any TXNM entity would be required to make disclosures under California law and for the nature of any such required disclosures.

Table of Contents

*International Accords*

The United Nations Framework Convention on Climate Change ("UNFCCC") is an international environmental treaty that was negotiated at the 1992 United Nations Conference on Environment and Development (informally known as the Earth Summit) and entered into force in March 1994. The objective of the treaty is to "stabilize greenhouse gas concentrations in the atmosphere at a level that would prevent dangerous anthropogenic interference with the climate system." Parties to the UNFCCC, including the U.S., have been meeting annually in Conferences of the Parties ("COP") to assess progress in meeting the objectives of the UNFCCC.

In 2015, the Paris Agreement was finalized during the 2015 COP. The aim of the Paris Agreement is to limit global temperature rise to two degrees Celsius above pre-industrial levels. The agreement, which was agreed to by approximately 200 parties, requires that countries submit INDCs. INDCs reflect national targets and actions that arise out of national policies and elements relating to oversight, guidance and coordination of actions to reduce emissions by all countries. In November 2014, then President Obama announced the United States' commitment to reduce GHG, on an economy-wide basis, by 26%-28% from 2005 levels by the year 2025. The U.S. INDC was part of an overall effort by the former administration to have the U.S. achieve economy-wide reductions of around 80% by 2050. The former administration's GHG reduction target for the electric utility industry was a key element of its INDC and was based on EPA's GHG regulations for new, existing, and modified and reconstructed sources at that time. Thresholds for the number of countries necessary to ratify or accede to the Paris Agreement and total global GHG percentage were achieved on October 5, 2016 and the Paris Agreement entered into force on November 4, 2016. In 2017, President Trump announced that the U.S. would withdraw from the Paris Agreement. As a result of the President's notice to the United Nations, the U.S. officially withdrew from the Paris Agreement on November 4, 2020. On January 20, 2021, President Biden signed an instrument that will allow the U.S. to rejoin the Paris Agreement. The instrument was deposited with the United Nations on January 21, 2021, and the U.S. officially became a party to the Paris Agreement on February 19, 2021. On January 20, 2025, President Trump signed an executive order entitled "Putting America First in International Environmental Agreements," directing the United States Ambassador to the United Nations to immediately submit formal written notification of the United States' withdrawal from the Paris Agreement and any other agreement, pact, accord, or similar commitment made under the United Nations Framework Convention on Climate Change.

PNM calculated GHG reductions that resulted from scenarios that captured PNM's retirement of its share of the SJGS in 2022 and assumed exiting Four Corners in 2031. With that PNM set a goal to have a 100% carbon-free generating portfolio by 2040. While the Company has not conducted an independent 2 Degree Scenario analysis, our commitment to becoming 100% carbon-free by 2040 produces a carbon emissions reduction pathway that tracks within the ranges of climate scenario pathways that are consistent with limiting the global warming average to less than 2 degrees Celsius. In addition, as an investor-owned utility operating in the state of New Mexico, PNM is required to comply with the ETA, which requires utilities' generating portfolio be 100% carbon-free by 2045. The requirements of the ETA and the Company's goal compare favorably to the U.S. INDC of 50% to 52% carbon emissions reduction by 2030 and the Biden Administration's goal of net-zero carbon emissions economy-wide by 2050.

PNM will continue to monitor the United States' move to withdraw from the Paris Agreement and other parties' involvement in these types of international accords, but the potential impact that such accords may have on the Company cannot be determined at this time.

*Assessment of Legislative/Regulatory Impacts*

The Company has assessed, and continues to assess, the impacts of climate change legislation and regulation on its business. This assessment is ongoing and future changes arising out of the legislative or regulatory process could impact the assessment significantly. PNM's assessment includes assumptions regarding specific GHG limits; the timing of implementation of these limits; the possibility of a market-based trading program, including the associated costs and the availability of emission credits or allowances; the development of emission reduction and/or renewable energy technologies; and provisions for cost containment. Moreover, the assessment assumes various market reactions such as the price of coal and gas and regional plant economics. These assumptions are, at best, preliminary and speculative. However, based upon these assumptions, the enactment of climate change legislation or regulation could, among other things, result in significant compliance costs, including large capital expenditures by PNM, and could jeopardize the Company's reputation as well as the economic viability of certain generating facilities. The ultimate consequences of increased stakeholder scrutiny related to climate change and environmental regulation could lead to increased costs to customers and affect results of operations, cash flows, and financial condition if the incurred costs are not fully recovered through regulated rates. Higher rates could also contribute to reduced usage of electricity. PNM's assessment process is evolving and is too speculative at this time for a meaningful prediction of the long-term financial impact.

**Transmission Issues**

At any given time, FERC has various notices of inquiry and rulemaking dockets related to transmission issues pending. Such actions may lead to changes in FERC administrative rules or ratemaking policy but have no time frame in which action must be taken or a docket closed with no further action. Further, such notices and rulemaking dockets do not apply strictly to

Table of Contents

PNM but will have industry-wide effects in that they will apply to all FERC-regulated entities. PNM monitors and often submits comments taking a position in such notices and rulemaking dockets or may join in larger group responses. PNM often cannot determine the full impact of a proposed rule and policy change until the final determination is made by FERC and PNM is unable to predict the outcome of these matters.

**Other Matters**

See Notes 11 and 12 herein and Notes 16 and 17 of the Notes to Consolidated Financial Statements in the 2024 Annual Reports on Form 10-K for a discussion of commitments and contingencies and rate and regulatory matters.

## CRITICAL ACCOUNTING POLICIES AND ESTIMATES

The preparation of financial statements in accordance with GAAP requires Company management to select and apply accounting policies that best provide the framework to report the results of operations and financial position for TXNM, PNM, and TNMP. The selection and application of those policies requires management to make difficult, subjective, and/or complex judgments concerning reported amounts of revenue and expenses during the reporting period and the reported amounts of assets and liabilities at the date of the financial statements. As a result, there exists the likelihood that materially different amounts would be reported under different conditions or using different assumptions.

As of June 30, 2025, there have been no significant changes with regard to the critical accounting policies disclosed in TXNM's, PNM's, and TNMP's 2024 Annual Reports on Forms 10-K. The policies disclosed included regulatory accounting, impairments, decommissioning and reclamation costs, pension and other postretirement benefits, accounting for contingencies, and income taxes.

## *MD&A FOR TNMP*

## RESULTS OF OPERATIONS

TNMP operates in only one reportable segment, as presented above in Results of Operations for TXNM.

## *MD&A FOR PNM*

## RESULTS OF OPERATIONS

PNM operates in only one reportable segment, as presented above in Results of Operations for TXNM.

## DISCLOSURE REGARDING FORWARD LOOKING STATEMENTS

Statements made in this filing that relate to future events or TXNM's, PNM's, or TNMP's expectations, projections, estimates, intentions, goals, targets, and strategies are made pursuant to the Private Securities Litigation Reform Act of 1995. Readers are cautioned that all forward-looking statements are based upon current expectations and estimates and apply only as of the date of this report. TXNM, PNM, and TNMP assume no obligation to update this information.

Because actual results may differ materially from those expressed or implied by these forward-looking statements, TXNM, PNM, and TNMP caution readers not to place undue reliance on these statements. TXNM's, PNM's, and TNMP's business, financial condition, cash flows, and operating results are influenced by many factors, which are often beyond their control, that can cause actual results to differ from those expressed or implied by the forward-looking statements.
These factors, which are neither presented in order of importance nor weighted, include:

- The failure of Parent to obtain any equity, debt, or other financing necessary to complete the Merger
- The expected timing and likelihood of completion of the pending Merger, including the timing, receipt and terms and conditions of any required governmental and regulatory approvals of the pending Merger that could reduce anticipated benefits or cause the parties to abandon the transaction
- The occurrence of any event, change or other circumstances that could give rise to the termination of the Merger Agreement, including in circumstances requiring TXNM to pay a termination fee
- The possibility that TXNM's shareholders may not approve the Merger Agreement
- The receipt of an unsolicited offer from another party to acquire our assets or capital stock that could interfere with the Merger
- The outcome of any legal proceedings, regulatory proceedings, or enforcement matters that may be instituted relating to the Merger
- Risks related to disruption of management time from ongoing business operations due to the proposed Merger
- The risk that the proposed transaction and its announcement could have an adverse effect on the ability of TXNM to retain and hire key personnel and maintain relationships with its customers and suppliers, and on its operating results and businesses generally

Table of Contents

- The announcement and pendency of the Merger, during which TXNM is subject to certain operating restrictions, could have an adverse effect on TXNM's businesses, results of operations, financial condition or cash flows
- The costs incurred to consummate the Merger
- The risk that the price of TXNM's common stock may fluctuate during the pendency of the proposed transaction and may decline significantly if the proposed transaction is not completed
- The ability of PNM and TNMP to recover costs and earn allowed returns in regulated jurisdictions and the impact on service levels for PNM customers if the ultimate outcomes do not provide for the recovery of costs and operating and capital expenditures, as well as other impacts of federal or state regulatory and judicial actions
- The ability of the Company to successfully forecast and manage its operating and capital expenditures, including aligning expenditures with the revenue levels resulting from the ultimate outcomes of regulatory proceedings
- Uncertainty surrounding the status of PNM's participation in jointly-owned generation projects
- Uncertainty regarding the requirements and related costs of decommissioning power plants and reclamation of coal mines, as well as the ability to recover those costs from customers, including the potential impacts of current and future regulatory proceedings
- The impacts on the electricity usage of customers and consumers due to performance of state, regional, and national economies, energy efficiency measures, weather, seasonality, alternative sources of power, advances in technology, and other changes in supply and demand
- Uncertainty related to the potential for regulatory orders, legislation or rulemakings that provide for municipalization of utility assets or public ownership of utility assets, including generation resources, or which would delay or otherwise impact the procurement of necessary resources in a timely manner
- The Company's ability to maintain its debt, including convertible debt, and access the financial markets in order to repay or refinance debt as it comes due and for ongoing operations and construction expenditures due to disruptions in the capital or credit markets, actions by ratings agencies, and fluctuations in interest rates resulting from any negative impacts from regulatory proceedings, actions by the Federal Reserve, entry into the Merger Agreement, geopolitical activity, including tariffs, or the risk of wildfires and storms
- The risks associated with the cost and completion of generation, transmission, distribution, and other projects, including uncertainty related to regulatory approvals and cost recovery, the ability of counterparties to meet their obligations under certain arrangements (including renewable energy resources, approved PPAs and ESAs), and supply chain or other outside support services that may be disrupted
- The potential unavailability of cash from TXNM's subsidiaries due to regulatory, statutory, or contractual restrictions or subsidiary earnings or cash flows
- The performance of generating units, transmission systems, and distribution systems, which could be negatively affected by operational issues, fuel quality and supply chain issues (disruptions), unplanned outages, extreme weather conditions, wildfires, storms, terrorism, cybersecurity breaches, and other catastrophic events, including the costs the Company may incur to repair its facilities and/or the liabilities the Company may incur to third parties in connection with such issues beyond the extent of insurance coverage
- State and federal regulation or legislation relating to environmental matters and renewable energy requirements, the resultant costs of compliance, and other impacts on the operations and economic viability of PNM's generating plants
- State and federal regulatory, legislative, executive, and judicial decisions and actions on ratemaking, tariffs, and taxes, including guidance related to the interpretation of changes in tax laws, the Inflation Reduction Act, the Infrastructure Investment and Jobs Act of 2021, the OBBBA, and other matters
- Risks related to climate change, including potential financial and reputational risks resulting from increased stakeholder scrutiny related to climate change, litigation, legislative and regulatory efforts to limit GHG, including the impacts of the ETA
- Employee workforce factors, including cost control efforts and issues arising out of collective bargaining agreements and labor negotiations with union employees
- Variability of prices and volatility and liquidity in the wholesale power and natural gas markets, including the impacts to transmission margins
- Changes in price and availability of fuel and water supplies, including the ability of the mine supplying coal to Four Corners and the companies involved in supplying nuclear fuel to provide adequate quantities of fuel
- Regulatory, financial, and operational risks inherent in the operation of nuclear facilities, including spent fuel disposal uncertainties
- The impacts of decreases in the values of marketable securities maintained in trusts to provide for decommissioning, reclamation, pension benefits, and other postretirement benefits, including potential increased volatility resulting from actions by the Federal Reserve to address inflationary concerns, and international developments
- Uncertainty surrounding counterparty performance and credit risk, including the ability of counterparties to supply fuel and perform reclamation activities and impacts to financial support provided to facilitate reclamation and decommissioning at SJGS
- The effectiveness of risk management regarding commodity transactions and counterparty risk
- The outcome of legal proceedings, including the extent of insurance coverage
- Changes in applicable accounting principles or policies

Any material changes to risk factors occurring after the filing of TXNM's, PNM's, and TNMP's 2024 Annual Reports on Form 10-K are disclosed in Item 1A, Risk Factors, in Part II of this Form 10-Q.

Table of Contents

For information about the risks associated with the use of derivative financial instruments, see Item 3. “Quantitative and Qualitative Disclosures About Market Risk.”

**SECURITIES ACT DISCLAIMER**

Certain securities described or cross-referenced in this report have not been registered under the Securities Act, or any state securities laws and may not be reoffered or sold in the United States absent registration or an applicable exemption from the registration requirements of the Securities Act and applicable state securities laws. This Form 10-Q does not constitute an offer to sell or the solicitation of an offer to buy any securities.

**WEBSITES**

The TXNM website, www.txnmenergy.com, is an important source of Company information. New or updated information for public access is routinely posted. TXNM encourages analysts, investors, and other interested parties to register on the website to automatically receive Company information by e-mail. This information includes news releases, notices of webcasts, and filings with the SEC. Participants will not receive information that was not requested and can unsubscribe at any time.

Our corporate internet addresses are:

- TXNM: www.txnmenergy.com
- PNM: www.pnm.com
- TNMP: www.tnmp.com

TXNM’s corporate website includes a dedicated section providing key environmental and other information related to PNM’s and TNMP’s operations, including information that collectively demonstrates the Company’s commitment to sustainability. This information highlights plans for PNM to be coal-free no later than 2031 and to have a carbon-free generating portfolio by 2040.

The contents of these websites are not a part of this Form 10-Q. The SEC filings of TXNM, PNM, and TNMP, including annual reports on Form 10-K, quarterly reports on Form 10-Q, current reports on Form 8-K, and amendments to those reports filed or furnished pursuant to Section 13(a) or 15(d) of the Exchange Act, are accessible free of charge on the TXNM website as soon as reasonably practicable after they are filed with, or furnished to, the SEC. Reports filed with the SEC are available on its website, www.sec.gov. These reports are also available in print upon request from TXNM free of charge.

Also available on the Company’s website at https://www.txnmenergy.com/sustainability/governance/governance-documents.aspx and in print upon request from any shareholder are TXNM’s:

- Corporate Governance Principles
- Code of Ethics (*Do the Right Thing – Principles of Business Conduct; Supplier Code of Conduct*)
- Charters of the Audit and Ethics Committee, Nominating and Governance Committee, Compensation and Human Resources Committee, and Finance Committee
- Restated Articles of Incorporation and Bylaws

The Company will post amendments to or waivers from its code of ethics (to the extent applicable to the Company’s executive officers and directors) on its website.

**ITEM 3. QUANTITATIVE AND QUALITATIVE DISCLOSURES ABOUT MARKET RISK**

The Company manages the scope of its various forms of market risk through a comprehensive set of policies and procedures with oversight by senior level management through the Risk Management Committee (“RMC”). The Board’s Finance Committee sets the risk limit parameters. The RMC has oversight over the risk control organization. The RMC is assigned responsibility for establishing and enforcing the policies, procedures, and limits and evaluating the risks inherent in proposed transactions on an enterprise-wide basis.

The RMC’s responsibilities include:

- Establishing policies regarding risk tolerance levels and activities in each of the business segments
- Approving new types of derivatives entered into for marketing and hedging
- Reviewing and approving hedging risk activities
- Establishing policies regarding counterparty credit exposure and limits
- Authorizing and delegating transaction limits
- Reviewing and approving controls and procedures for derivative activities
- Reviewing and approving models and assumptions used to calculate mark-to-market and market risk exposure

Table of Contents

- Proposing risk limits to the Board's Finance Committee for its approval
- Reporting to the Board's Audit and Finance Committees on these activities

To the extent an open position exists, fluctuating commodity prices, interest rates, equity prices, and economic conditions can impact financial results and financial position, either favorably or unfavorably. As a result, the Company cannot predict with certainty the impact that its risk management decisions may have on its businesses, operating results, or financial position.

**Commodity Risk**

Information concerning accounting for derivatives and the risks associated with commodity contracts is set forth in Note 7, including a summary of the fair values of mark-to-market energy related derivative contracts included in the Condensed Consolidated Balance Sheets. During the six months ended June 30, 2025, and the year ended December 31, 2024, the Company had no commodity derivative instruments designated as cash flow hedging instruments.

Commodity contracts that meet the definition of a derivative are recorded at fair value on the Condensed Consolidated Balance Sheets. In the six months ended June 30, 2025 and 2024, the effects of mark-to-market commodity derivative instruments had no impact to PNM's net earnings and $3.2 million and $4.5 million of fair value losses have been recorded as a regulatory asset. All of the fair values as of June 30, 2025 and December 31, 2024, were determined based on prices provided by external sources other than actively quoted market prices. The net mark-to-market amounts will settle by the end of 2025.

PNM may be exposed to changes in the market prices of electricity and natural gas for the positions in its wholesale portfolio not covered by the FPPAC. The Company manages risks associated with market fluctuations by utilizing various commodity instruments that may qualify as derivatives, including futures, forwards, options, and swaps. PNM uses such instruments to hedge its exposure to changes in the market prices of electricity and natural gas. PNM also uses such instruments under an NMPRC approved hedging plan to manage fuel and purchased power costs related to customers covered by its FPPAC.

**Credit Risk**

The Company is exposed to credit risk from its retail and wholesale customers, as well as the counterparties to derivative instruments. The Company conducts counterparty risk analysis across business segments and uses a credit management process to assess the financial conditions of counterparties. The following table provides information related to credit exposure by the credit worthiness (credit rating) and concentration of credit risk for wholesale counterparties, all of which will mature in less than two years.

**Schedule of Credit Risk Exposure**
**June 30, 2025**

| Rating[1] | Credit Risk Exposure[2] | Number of Counter-parties >10% | Net Exposure of Counter-parties >10% |
|---|---|---|---|
| | (Dollars in thousands) | | |
| External ratings: | | | |
| Investment grade | $ 1,837 | 2 | $ 1,519 |
| Non-investment grade | — | — | — |
| Split ratings | — | — | — |
| Internal ratings: | | | |
| Investment grade | 230 | — | — |
| Non-investment grade | — | — | — |
| Total | $ 2,067 | | $ 1,519 |

(1) The rating "Investment Grade" is for counterparties, or a guarantor, with a minimum S&P rating of BBB- or Moody's rating of Baa3. The category "Internal Ratings – Investment Grade" includes those counterparties that are internally rated as investment grade in accordance with the guidelines established in the Company's credit policy.

(2) The Credit Risk Exposure is the gross credit exposure, including long-term contracts, forward sales, and short-term sales. The gross exposure captures the amounts from receivables/payables for realized transactions, delivered and unbilled revenues, and mark-to-market gains/losses. Gross exposures can be offset according to legally enforceable netting arrangements but are not reduced by posted credit collateral. At June 30, 2025, TXNM held no cash collateral to offset its credit exposure.

Net credit risk for the Company's largest counterparty as of June 30, 2025, was $1.1 million.

Other investments have no significant counterparty credit risk.

Table of Contents

**Interest Rate Risk**

The majority of PNM's and TNMP's long-term debt is fixed-rate debt, which does not expose earnings to adverse changes in market interest rates. PNM and TNMP earnings are exposed to adverse changes in market interest rates when long-term debt must be refinanced, repriced or redeemed. TXNM's debt and the revolving credit facilities of PNM and TNMP are exposed to interest rate risk to the extent variable interest rates continue to rise. The Company periodically makes plans to reduce its variable interest rate exposures through various instruments including fixed rate debt and equity and hedging arrangements and otherwise expects that it will be able to extend or replace variable rate debt under similar terms and conditions prior to their expirations. Variable interest rates under the TXNM, PNM, and TNMP revolving credit facilities and term loans are based on SOFR.

At July 25, 2025, variable rate debt balances and weighted average interest rates were as follows:

| Variable Rate Debt | Weighted Average Interest Rate | Balance Outstanding | Capacity |
|---|---|---|---|
| | | (In thousands) | |
| Short-term Debt: | | | |
| TXNM Revolving Credit Facility | 5.93 % | $ 85,500 | $ 300,000 |
| PNM Revolving Credit Facility | 5.69 | 231,800 | 400,000 |
| PNM New Mexico Credit Facility | 5.70 | 40,000 | 40,000 |
| TNMP Revolving Credit Facility | 5.28 | 14,300 | 200,000 |
| | | $ 371,600 | $ 940,000 |
| Long-term Debt: | | | |
| TXNM 2023 Term Loan | 5.78 | 210,000 | |
| PNM 2024 Term Loan | 5.35 | 200,000 | |
| PNM 2025 Term Loan | 5.35 | 195,000 | |
| | | $ 605,000 | |

The investments held by PNM in trusts for decommissioning and reclamation had an estimated fair value of $487.0 million at June 30, 2025, of which 10.4% were fixed-rate debt securities that subject PNM to risk of loss of fair value with increases in market interest rates. If interest rates were to increase by 50 basis points from their levels at June 30, 2025, the decrease in the fair value of the fixed-rate securities would be 0.3%, or $0.2 million.

PNM does not directly recover or return through rates any losses or gains on the securities, including equity investments discussed below, in the trusts for decommissioning and reclamation. However, the overall performance of these trusts does enter into the periodic determinations of expense and funding levels, which are factored into the rate making process to the extent applicable to regulated operations. PNM is at risk for shortfalls in funding of obligations due to investment losses, including those from the equity market risks discussed below, to the extent not ultimately recovered through rates charged to customers.

**Equity Market Risk**

The investments held by PNM in trusts for decommissioning and reclamation include certain equity securities at June 30, 2025. These equity securities expose PNM to losses in fair value should the market values of the underlying securities decline. Equity securities comprised 82.7% of the securities held by the trusts as of June 30, 2025. A hypothetical 10% decrease in equity prices would reduce the fair values of these funds by $40.3 million.

**ITEM 4. CONTROLS AND PROCEDURES**

**Evaluation of disclosure controls and procedures**

As of the end of the period covered by this quarterly report, each of TXNM, PNM, and TNMP conducted an evaluation, under the supervision and with the participation of its management, including its Chief Executive Officer and Chief Financial Officer, of the effectiveness of the design and operation of the disclosure controls and procedures (as defined in Rules 13a-15(e) and 15d-15(e) under the Securities Exchange Act of 1934). Based upon this evaluation, the Chief Executive Officer and the Chief Financial Officer of each of TXNM, PNM, and TNMP concluded that the disclosure controls and procedures are effective.

**Changes in internal controls over financial reporting**

There have been no changes in each of TXNM's, PNM's, and TNMP's internal control over financial reporting (as such term is defined in Rules 13a-15(f) and 15d-15(f) under the Securities Exchange Act of 1934) during the quarter ended June 30,

2025, that have materially affected, or are reasonably likely to materially affect, each of TXNM's, PNM's, and TNMP's internal control over financial reporting.

**PART II. OTHER INFORMATION**

[None]

**ITEM 1. LEGAL PROCEEDINGS**

See Notes 11 and 12 for information related to the following matters, for TXNM, PNM, and TNMP, incorporated in this item by reference.

**Note 11**

- TXNM – Merger Related Litigation

**Note 12**

- PNM – 2024 Rate Change
- PNM – Integrated Resource Plans
- PNM – Grid Modernization Plan
- TNMP – Transmission Cost of Service Rates
- TNMP – Periodic Distribution Rate Adjustment

**ITEM 1A. RISK FACTORS**

As of the date of this report, there have been no material changes with regard to the Risk Factors disclosed in TXNM's, PNM's, and TNMP's Annual Reports on Form 10-K for the year ended December 31, 2024, except as set forth below.

***Risks Relating to the Proposed Merger with Blackstone Infrastructure***

**There is no assurance when or if the proposed Merger will be completed.**

Completion of the proposed Merger is subject to the satisfaction or waiver of a number of conditions as set forth in the Merger Agreement, including approval by the holders of at least a majority of outstanding shares of TXNM common stock entitled to vote thereon, regulatory approvals and other customary closing conditions. There can be no assurance that the conditions to completion of the proposed Merger will be satisfied or waived or that other events will not intervene to delay or result in the failure to close the proposed Merger. In addition, each of Blackstone Infrastructure and TXNM may unilaterally terminate the Merger Agreement under certain circumstances, and Blackstone Infrastructure and TXNM may agree at any time to terminate the Merger Agreement, even if TXNM shareholders have already approved the Merger Agreement and thereby approved the Merger and the other transactions contemplated by the Merger Agreement.

**Blackstone Infrastructure and TXNM may be unable to obtain the regulatory approvals required to complete the proposed Merger.**

In addition to other conditions set forth in the Merger Agreement, completion of the proposed Merger is conditioned upon the receipt of various state and U.S. federal regulatory approvals, including, but not limited to, expiration or termination of the applicable waiting period under HSR and approval by NMPRC, PUCT, FERC, and NRC. Blackstone Infrastructure and TXNM will make various filings and submissions and will pursue all required consents, orders and approvals in accordance with the Merger Agreement. These consents, orders and approvals may impose requirements, limitations or costs or place restrictions, and if such consents, orders and approvals require an extended period of time to be obtained, such extended period of time could increase the chance that an event occurs that constitutes a material adverse effect with respect to TXNM and thereby may allow Blackstone Infrastructure not to complete the proposed Merger. Such extended period of time also may increase the chance that other adverse effects with respect to TXNM could occur, such as the loss of key personnel. Further, no assurance can be given that the required consents, orders and approvals will be obtained or that the required conditions to closing will be satisfied.

**The announcement and pendency of the proposed Merger, during which TXNM is subject to certain operating restrictions, could have an adverse effect on TXNM's businesses, results of operations, financial condition, or cash flows.**

The announcement and pendency of the proposed Merger could disrupt TXNM's businesses, and uncertainty about the effect of the Merger may have an adverse effect on TXNM. These uncertainties could disrupt the business of TXNM and cause suppliers, vendors, partners, and others that deal with TXNM to defer entering into contracts with TXNM or making other decisions concerning TXNM or seek to change or cancel existing business relationships with TXNM. In addition, TXNM's employees may experience uncertainty regarding their roles after the Merger; for example, employees may depart either before

the completion of the Merger because of such uncertainty and issues relating to the difficulty of coordination or a desire not to remain following the Merger; and the pendency of the Merger may adversely affect TXNM's ability to retain, recruit, and motivate key personnel. Additionally, the attention of TXNM's management may be directed towards the completion of the Merger including obtaining regulatory approvals and other transaction-related considerations and may be diverted from the day-to-day business operations of TXNM and matters related to the Merger may require commitments of time and resources that could otherwise have been devoted to other opportunities that might have been beneficial to TXNM. Additionally, the Merger requires TXNM to obtain Blackstone Infrastructure's consent prior to taking certain specified actions while the Merger is pending. These restrictions may prevent TXNM from pursuing otherwise attractive business opportunities or other capital structure alternatives and making other changes to its business or executing certain of its business strategies prior to the completion of the Merger. Further, the Merger may give rise to potential liabilities, including as a result of pending and future shareholder lawsuits relating to the Merger. Any of these matters could adversely affect the businesses of, or harm the results of operations, financial condition or cash flows of TXNM.

**TXNM will incur substantial transaction fees and costs in connection with the proposed Merger.**

TXNM has incurred and expects to incur additional material non-recurring expenses in connection with the proposed Merger and completion of the transactions contemplated by the Merger Agreement. Further, even if the proposed Merger is not completed, TXNM will need to pay certain costs relating to the proposed Merger incurred prior to the date the proposed Merger was abandoned, such as legal, accounting, financial advisory, filing, and printing fees.

**The termination of the Merger Agreement could negatively impact TXNM.**

If the Merger is not completed for any reason, the ongoing business of TXNM may be adversely affected and, without realizing any of the anticipated benefits of having completed the Merger, TXNM would be subject to a number of risks, including the following:

- TXNM may experience negative reactions from the financial markets, including a decline of its stock price (which may reflect a market assumption that the Merger will be completed);
- TXNM may experience negative reactions from its customers, regulators and employees;
- TXNM may be required to pay certain costs relating to the Merger, whether or not the Merger is completed; and
- Matters relating to the Merger will have required substantial commitments of time and resources by TXNM management, which would otherwise have been devoted to day-to-day operations and other opportunities that may have been beneficial to TXNM as an independent company.

If the Merger Agreement is terminated and the Board seeks another merger, business combination or other transaction, TXNM shareholders cannot be certain that TXNM will be able to find a party willing to offer equivalent or more attractive consideration than the consideration TXNM shareholders would receive in the Merger. If the Merger Agreement is terminated under certain circumstances specified in the Merger Agreement (including if Blackstone Infrastructure terminates the Merger Agreement due to a change in recommendation of the Board or if TXNM terminates the Merger Agreement to accept a Superior Proposal), TXNM will be required to pay Blackstone Infrastructure a termination fee of $210.0 million, plus costs and expenses.

**Litigation may be instituted against TXNM and members of the Board challenging the proposed Merger, and adverse judgments in these lawsuits may prevent the proposed Merger from becoming effective within the expected timeframe or at all.**

TXNM and members of the Board may be named as defendants in putative class action lawsuits or other proceedings that may be brought by TXNM shareholders challenging the proposed Merger. If the plaintiffs in any of these actions seek a preliminary or permanent injunction and are successful in obtaining one, the parties may be prevented from completing the proposed Merger in the expected timeframe, if at all. Even if the plaintiffs in these potential actions are not successful in obtaining an injunction, they may nevertheless continue the action and seek damages after the transaction has closed. In addition, the costs of defending against such claims could adversely affect the financial condition of TXNM and such actions could adversely affect the reputation of TXNM and members of its Board or management.

Counsel for TXNM received a number of demand letters from law firms on behalf of individuals who are purported TXNM shareholders, accompanied by draft complaints naming TXNM and its directors as defendants and alleging that TXNM's preliminary proxy statement with respect to the Merger, omitted or misrepresented certain material information. Such draft complaints include a request for injunctive relief with respect to the TXNM shareholder vote to approve, and the closing of, the Merger, as well as other remedies, including counsel fees. TXNM believes that the allegations set forth in the demand letters and draft complaints are without merit and, if such complaints are actually filed, will defend such actions vigorously.

**The Merger Agreement contains provisions that could discourage a potential alternative acquirer that might be willing to pay more to acquire TXNM.**

The Merger Agreement contains customary "no shop" provisions which state that we will not solicit or facilitate proposals regarding a merger or similar transaction with another party except in certain limited circumstances. While the Board may withdraw or change its recommendation regarding the Merger Agreement in response to an unsolicited third-party proposal to acquire TXNM that the Board determines to be superior to the Merger, there are restrictions on its ability to do so, and in certain circumstances, TXNM may also be required to pay Blackstone Infrastructure a termination fee. These provisions could discourage a potential third-party acquirer from considering or proposing an alternative acquisition, even if it were prepared to pay consideration with a higher value than that proposed to be paid in the Merger.

## ITEM 5. OTHER INFORMATION

During the three months ended June 30, 2025, no director or officer (as defined by Rule 16a-1(f) of the Exchange Act) of the Company adopted or terminated a "Rule 10b5-1 trading arrangement" or "non-Rule 10b5-1 trading arrangement," as each term is defined in Item 408(a) of Regulation S-K.

**PNM July 2025 SUNs**

On July 31, 2025, PNM, entered into the PNM July 2025 Note Purchase Agreement with the institutional investor parties thereto for the sale of $350.0 million aggregate principal amount of senior unsecured notes in the following series and denominations: (i) $200.0 million aggregate principal amount of its 5.47% Senior Unsecured Notes, Series C, due July 31, 2031, and (ii) $150.0 million aggregate principal amount of its 6.03% Senior Unsecured Notes, Series D, due July 31, 2036 (the "PNM July 2025 SUNs"). The PNM July 2025 SUNs were issued on July 31, 2025 in a private placement transaction in reliance on an exemption from registration under the Securities Act. Interest on the PNM July 2025 SUNs is payable semiannually on January 31 and July 31 of each year, commencing on January 31, 2026.

PNM will use the gross proceeds from the PNM July 2025 SUNs for the repayment of existing indebtedness, funding of capital expenditures, and general corporate purposes.

The terms of the PNM July 2025 Note Purchase Agreement, which continue to apply so long as any of the PNM July 2025 SUNs are outstanding, include customary covenants, including a covenant that requires PNM to maintain a debt-to-capitalization ratio of less than or equal to 65%, customary events of default, including a cross-default provision, and covenants regarding parity of financial covenants, liens and guarantees with respect to PNM's material credit facilities. In the event of a change of control (as defined in the PNM July 2025 Note Purchase Agreement), PNM will be required to offer to prepay the PNM July 2025 SUNs at par. The proposed transaction between TXNM and Blackstone Infrastructure would not constitute a change in control under the PNM July 2025 SUNs. PNM has the right to redeem any or all of the PNM July 2025 SUNs prior to their maturities, subject to payment of a customary make-whole premium.

The foregoing description is qualified in its entirety by the PNM July 2025 Note Purchase Agreement, which is filed as Exhibit 10.12 to this Form 10-Q and is incorporated herein by reference.

The PNM July 2025 SUNs are not registered under the Securities Act and may not be offered or sold in the United States absent registration or an applicable exemption from registration requirements and applicable state laws. This Form 10-Q does not constitute an offer to sell nor a solicitation of an offer to purchase the PNM July 2025 SUNs or any other securities, and shall not constitute an offer, solicitation or sale in any state or jurisdiction in which such an offer, solicitation or sale would be unlawful.

## ITEM 6. EXHIBITS

| | | |
|---|---|---|
| 2.1 | TXNM | Agreement and Plan of Merger, dated as of May 18, 2025, by and among TXNM Energy, Inc., Troy ParentCo LLC and Troy Merger Sub Inc. (incorporated by reference to Exhibit 2.1 to TXNM's Current Report on Form 8-K filed May 19, 2025) |
| 3.1 | TXNM | Restated Articles of Incorporation of TXNM, as amended to date (incorporated by reference to Exhibit 3.1 to TXNM's Current Report on Form 8-K filed August 5, 2024) |
| 3.2 | PNM | Restated Articles of Incorporation of PNM, as amended through May 31, 2002 (incorporated by reference to Exhibit 3.1.1 to PNM's Quarterly Report on Form 10-Q for the quarter ended June 30, 2002) |
| 3.3 | TNMP | Articles of Incorporation of TNMP, as amended through July 7, 2005 (incorporated by reference to Exhibit 3.1.2 to TNMP's Quarterly Report on Form 10-Q for the quarter ended June 30, 2005) |

Table of Contents

| | | |
|---|---|---|
| 3.4 | TXNM | Bylaws of TXNM, with all amendments to and including August 2, 2024 (incorporated by reference to Exhibit 3.2 to TXNM's Current Report on Form 8-K filed August 5, 2024) |
| 3.5 | PNM | Bylaws of PNM, with all amendments to and including July 1, 2022 (incorporated by reference to Exhibit 3.5 to PNM's Current Report on Form 8-K filed July 1, 2022) |
| 3.6 | TNMP | Bylaws of TNMP, with all amendments to and including June 18, 2013 (incorporated by reference to Exhibit 3.6 to TNMP's Current Report on Form 8-K filed June 20, 2013) |
| 4.1 | TNMP | Twenty-Fourth Supplemental Indenture, dated as of July 21, 2025, between Texas-New Mexico Power Company and U.S. Bank Trust Company, National Association, as Trustee. (incorporated by reference to Exhibit 4.1 to TNMP's Current Report on Form 8-K filed July 22, 2025) |
| 10.1 | TXNM | TXNM Merger Backstop Revolving Facility, dated as of May 18, 2025, by and among TXNM Energy, Inc., the lenders party thereto and Wells Fargo Bank, National Association, as administrative agent. (incorporated by reference to Exhibit 10.1 to TXNM's Current Report on Form 8-K filed May 19, 2025) |
| 10.2 | TXNM | Stock Purchase Agreement, dated as of May 18, 2025 by and between TXNM Energy, Inc. and Troy TopCo LP. (incorporated by reference to Exhibit 10.3 to TXNM's Current Report on Form 8-K filed May 19, 2025) |
| 10.3 | TXNM | Fourteenth Amendment to Credit Agreement, dated as of May 23, 2025, among TXNM Energy, Inc., the lenders party thereto, and Wells Fargo Bank, National Association, as administrative agent. (incorporated by reference to Exhibit 10.1 to TXNM's Current Report on Form 8-K filed May 27, 2025) |
| 10.4 | TXNM | First Amendment to Term Loan Agreement, dated as of May 23, 2025, among TXNM Energy, Inc., the lenders party thereto, and Wells Fargo Bank, National Association, as administrative agent. (incorporated by reference to Exhibit 10.2 to TXNM's Current Report on Form 8-K filed May 27, 2025) |
| 10.5 | TXNM | Consent and Waiver to Standby Letter of Credit, dated May 18, 2025, between TXNM Energy, Inc., and Wells Fargo Bank, National Association. (incorporated by reference to Exhibit 10.3 to TXNM's Current Report on Form 8-K filed May 27, 2025) |
| 10.6 | TXNM | Stock Purchase Agreement, dated as of June 24, 2025 by and among TXNM Energy, Inc., Zimmer Partners, LP and the Purchasers set forth on Schedule I thereto. (incorporated by reference to Exhibit 10.1 to TXNM's Current Report on Form 8-K filed June 24, 2025) |
| 10.7 | TXNM | First Amendment dated July 29, 2025 to TXNM 2025 Officer Annual Incentive Plan |
| 10.8 | TXNM | First Amendment dated July 29, 2025 to TXNM 2025 Long-Term Incentive Plan |
| 10.9 | TXNM | Fourth Amendment dated July 29, 2025 to TXNM 2024 Long-Term Incentive Plan |
| 10.10 | TXNM | Fifth Amendment dated July 29, 2025 to TXNM 2023 Long-Term Incentive Plan |
| 10.11 | PNM | Note Purchase Agreement, dated April 23, 2025, between Public Service Company of New Mexico and the purchasers named therein (incorporated by reference to Exhibit 10.1 to PNM's Current Report on Form 8-K filed April 23, 2025) |
| 10.12 | PNM | Note Purchase Agreement, dated July 31, 2025, between Public Service Company of New Mexico and the purchasers named therein |
| 10.13 | TNMP | TNMP Merger Backstop Term Loan, dated as of May 18, 2025, by and among Texas-New Mexico power Company, the lenders party thereto and Wells Fargo Bank, National Association, as administrative agent. (incorporated by reference to Exhibit 10.2 to TNMP's Current Report on Form 8-K filed May 19, 2025) |
| 10.14 | TNMP | First Amendment to Credit Agreement, dated May 23, 2025, between Texas-New Mexico power Company, the lenders party thereto, and Wells Fargo Bank, National Association. (incorporated by reference to Exhibit 10.4 to TNMP's Current Report on Form 8-K filed May 27, 2025) |
| 10.15 | TNMP | Bond Purchase Agreement, dated July 21, 2025, between Texas-New Mexico Power Company and the purchasers named therein. (incorporated by reference to Exhibit 10.1 to TNMP's Current Report on Form 8-K filed July 22, 2025) |
| 31.1 | TXNM | Chief Executive Officer Certification Pursuant to Section 302 of the Sarbanes-Oxley Act of 2002 |
| 31.2 | TXNM | Chief Financial Officer Certification Pursuant to Section 302 of the Sarbanes-Oxley Act of 2002 |
| 31.3 | PNM | Chief Executive Officer Certification Pursuant to Section 302 of the Sarbanes-Oxley Act of 2002 |
| 31.4 | PNM | Chief Financial Officer Certification Pursuant to Section 302 of the Sarbanes-Oxley Act of 2002 |
| 31.5 | TNMP | Chief Executive Officer Certification Pursuant to Section 302 of the Sarbanes-Oxley Act of 2002 |

Table of Contents

| | | |
|---|---|---|
| 31.6 | TNMP | Chief Financial Officer Certification Pursuant to Section 302 of the Sarbanes-Oxley Act of 2002 |
| 32.1 | TXNM | Chief Executive Officer and Chief Financial Officer Certification Pursuant to Section 906 of the Sarbanes-Oxley Act of 2002 |
| 32.2 | PNM | Chief Executive Officer and Chief Financial Officer Certification Pursuant to Section 906 of the Sarbanes-Oxley Act of 2002 |
| 32.3 | TNMP | Chief Executive Officer and Chief Financial Officer Certification Pursuant to Section 906 of the Sarbanes-Oxley Act of 2002 |
| 101.INS | TXNM, PNM, and TNMP | XBRL Instance Document - The instance document does not appear in the interactive data file because XBRL tags are embedded within the Inline XBRL document |
| 101.SCH | TXNM, PNM, and TNMP | Inline XBRL Taxonomy Extension Schema Document |
| 101.CAL | TXNM, PNM, and TNMP | Inline XBRL Taxonomy Extension Calculation Linkbase Document |
| 101.DEF | TXNM, PNM, and TNMP | Inline XBRL Taxonomy Extension Definition Linkbase Document |
| 101.LAB | TXNM, PNM, and TNMP | Inline XBRL Taxonomy Extension Label Linkbase Document |
| 101.PRE | TXNM, PNM, and TNMP | Inline XBRL Taxonomy Extension Presentation Linkbase Document |
| 104 | TXNM, PNM, and TNMP | Cover Page Inline XBRL File (included in Exhibits 101) |

Table of Contents

**SIGNATURE**

Pursuant to the requirements of the Securities Exchange Act of 1934, the registrants have duly caused this report to be signed on their behalf by the undersigned thereunto duly authorized.

**TXNM ENERGY, INC.**
**PUBLIC SERVICE COMPANY OF NEW MEXICO**
**TEXAS-NEW MEXICO POWER COMPANY**
(Registrants)

Date: August 1, 2025

/s/ Gerald R. Bischoff
Gerald R. Bischoff
Vice President and Corporate Controller
(Officer duly authorized to sign this report)

Exhibit 10.7

**FIRST AMENDMENT**
**TO THE**
**TXNM ENERGY, INC.**
**2025 OFFICER ANNUAL INCENTIVE PLAN**

TXNM Energy, Inc. (the "Company") previously adopted the TXNM Energy, Inc. 2025 Officer Annual Incentive Plan (the "Plan"). By this instrument, the Company desires to amend the Plan as set forth below.

1. This First Amendment shall be effective as of April 14, 2025.

2. Table 3 (Award Levels Table) of Attachment A to the Plan is hereby amended and restated to read as attached as Exhibit 1 hereto.

3. This First Amendment amends only the provisions of the Plan as noted above, and those provisions not expressly amended shall be considered in full force and effect. Notwithstanding the foregoing, this First Amendment shall supersede the provisions of the Plan to the extent those provisions are inconsistent with the provisions and intent of this First Amendment.

IN WITNESS WHEREOF, the Company has caused this First Amendment to be executed by its duly authorized representative on this ___ day of July, 2025.

**TXNM ENERGY, INC.**

By: /s/ Brian G. Iverson
Brian G. Iverson
General Counsel, Senior Vice President Regulatory and Public Policy, and Corporate Secretary

**Exhibit 1**

**Award Levels Table**
**(Table 3)**

| Award Levels | Threshold | Target | Maximum |
|---|---|---|---|
| Chief Executive Officer; Executive Chair | 57.5% | 115% | 230% |
| President and COO [1] | 45% | 90% | 180% |
| General Counsel, SVP Regulatory and Public Policy | 35% | 70% | 140% |
| All other SVPs | 32.5% | 65% | 130% |
| VP, NM Operations; VP, Human Resources; VP and CIO; and VP, TNMP | 25% | 50% | 100% |
| All other VPs | 22.5% | 45% | 90% |

[1] For January 1, 2025 to June 30, 2025, prior to promotion to CEO and President.

Exhibit 10.8

**FIRST AMENDMENT**
**TO THE**
**TXNM ENERGY, INC.**
**2025 LONG-TERM INCENTIVE PLAN**

TXNM Energy, Inc. (the "Company") previously adopted the TXNM Energy, Inc. 2025 Long-Term Incentive Plan (the "Plan") pursuant to the TXNM Energy, Inc. 2023 Performance Equity Plan (the "PEP"). By this instrument, the Company desires to amend the Plan as set forth below.

1. This First Amendment shall be effective as of April 14, 2025.

2. Attachment B to the Plan is hereby amended and restated to read as attached as Exhibit 1 hereto.

3. This First Amendment amends only the provisions of the Plan as noted above, and those provisions not expressly amended shall be considered in full force and effect. Notwithstanding the foregoing, this First Amendment shall supersede the provisions of the Plan to the extent those provisions are inconsistent with the provisions and intent of this First Amendment.

IN WITNESS WHEREOF, the Company has caused this First Amendment to be executed by its duly authorized representative on this ___ day of July, 2025.

**TXNM ENERGY, INC.**

By: /s/ Brian G. Iverson
Brian G. Iverson
General Counsel, Senior Vice President Regulatory and Public Policy, and Corporate Secretary

**Exhibit 1**

**ATTACHMENT B**
**Performance Share Award Opportunity Table**

| Officer Level | Threshold Award | Target Award | Maximum Award |
|---|---|---|---|
| Executive Chair [1] | Performance Shares = 75.25% of base salary | Performance Shares = 150.5% of base salary | Performance Shares = 301% of base salary |
| CEO | Performance Shares = 113.75% of base salary | Performance Shares = 227.5% of base salary | Performance Shares = 455% of base salary |
| President and COO[2] | Performance Shares = 78.75% of base salary | Performance Shares = 157.5% of base salary | Performance Shares = 315% of base salary |
| General Counsel, Senior Vice President Regulatory and Public Policy | Performance Shares = 47.25% of base salary | Performance Shares = 94.5% of base salary | Performance Shares = 189% of base salary |
| SVP and CFO; SVP, Finance | Performance Shares = 29.75% of base salary | Performance Shares = 59.5% of base salary | Performance Shares = 119% of base salary |
| SVP, Corporate Services | Performance Shares = 28% of base salary | Performance Shares = 56% of base salary | Performance Shares = 112% of base salary |
| VP, NM Operations; VP, Human Resources; VP and CIO; and VP, TNMP | Performance Shares = 26.25% of base salary | Performance Shares = 52.5% of base salary | Performance Shares = 105% of base salary |
| All other VPs | Performance Shares = 22.75% of base salary | Performance Shares = 45.5% of base salary | Performance Shares = 91% of base salary |

[1] Pro-rated to reflect change in role effective July 1, 2025.
[2] For January 1, 2025 to June 30, 2025, prior to promotion to CEO and President.

**FOURTH AMENDMENT**
**TO THE**
**TXNM ENERGY, INC.**
**2024 LONG-TERM INCENTIVE PLAN**

PNM Resources, Inc. previously adopted the 2024 Long-Term Incentive Plan (the "Plan") pursuant to the PNM Resources, Inc. 2023 Performance Equity Plan (the "PEP"). Effective as of August 2, 2024, PNM Resources, Inc. changed its name to TXNM Energy, Inc. (the "Company"). The PEP was subsequently renamed the TXNM Energy, Inc. 2023 Performance Equity Plan and the Plan has been renamed the TXNM Energy, Inc. 2024 Long-Term Incentive Plan. The Plan has been amended on three prior occasions. By this instrument, the Company desires to amend the Plan as set forth below.

1. This Fourth Amendment shall be effective as of April 14, 2025.

2. Attachment B to the Plan is hereby amended and restated to read as attached as Exhibit 1 hereto.

3. Attachment C to the Plan is hereby amended and restated to read as attached as Exhibit 2 hereto.

4. This Fourth Amendment amends only the provisions of the Plan as noted above, and those provisions not expressly amended shall be considered in full force and effect. Notwithstanding the foregoing, this Fourth Amendment shall supersede the provisions of the Plan to the extent those provisions are inconsistent with the provisions and intent of this Fourth Amendment.

IN WITNESS WHEREOF, the Company has caused this Fourth Amendment to be executed by its duly authorized representative on this ___ day of July, 2025.

**TXNM ENERGY, INC.**

By: /s/ Brian G. Iverson
Brian G. Iverson
General Counsel, Senior Vice President Regulatory and Public Policy, and Corporate Secretary

**Exhibit 1**

**ATTACHMENT B**
**Performance Share Award Opportunity Table**

| Officer Level | Threshold Award | Target Award | Maximum Award |
|---|---|---|---|
| Executive Chair (beginning July 1, 2025); CEO (January 1, 2024-June 30, 2025) | Performance Shares = 101.5% of base salary | Performance Shares = 203% of base salary | Performance Shares = 406% of base salary |
| CEO and President (beginning July 1, 2025) | Performance Shares = 113.75% of base salary | Performance Shares = 227.5% of base salary | Performance Shares = 455% of base salary |
| President and COO (January 1, 2025-June 30, 2025) | Performance Shares = 78.75% of base salary | Performance Shares = 157.5% of base salary | Performance Shares = 315% of base salary |
| President and COO (January 1, 2024-December 31, 2024) | Performance Shares = 57.75% of base salary | Performance Shares = 115.5% of base salary | Performance Shares = 231% of base salary |
| General Counsel, Senior Vice President Regulatory and Public Policy | Performance Shares = 47.25% of base salary | Performance Shares = 94.5% of base salary | Performance Shares = 189% of base salary |
| All other SVPs | Performance Shares = 29.75% of base salary | Performance Shares = 59.5% of base salary | Performance Shares = 119% of base salary |
| SVP Corporate Services | Performance Shares = 28% of base salary | Performance Shares = 56% of base salary | Performance Shares = 112% of base salary |
| VP, NM Operations; VP, Investor and Community Relations[1] | Performance Shares = 22.75% of base salary | Performance Shares = 45.5% of base salary | Performance Shares = 91% of base salary |
| All other VPs | Performance Shares = 19.25% of base salary | Performance Shares = 38.5% of base salary | Performance Shares = 77% of base salary |

[1] Reflects officer's title as of April 27, 2024.

**Exhibit 2**

**ATTACHMENT C**
**Time-Vested Restricted Stock Rights Award Opportunity Table**

| **Officer Level** | **Award** |
|---|---|
| Executive Chair | Restricted Stock Rights = 87% of base salary |
| CEO and President | Restricted Stock Rights = 97.5% of base salary |
| General Counsel, Senior Vice President Regulatory and Public Policy | Restricted Stock Rights = 40.5% of base salary |
| All other SVPs | Restricted Stock Rights = 25.5% of base salary |
| SVP Corporate Services | Restricted Stock Rights = 24% of base salary |
| VP, NM Operations; VP, Investor and Community Relations[2] | Restricted Stock Rights = 19.5% of base salary |
| All other VPs | Restricted Stock Rights = 16.5% of base salary |

[2] Reflects officer's title as of April 27, 2024.

**FIFTH AMENDMENT**
**TO THE**
**TXNM ENERGY, INC.**
**2023 LONG-TERM INCENTIVE PLAN**

PNM Resources, Inc. previously adopted the 2023 Long-Term Incentive Plan (the "Plan") pursuant to the PNM Resources, Inc. 2014 Performance Equity Plan (the "PEP"). The Plan has been amended on four prior occasions. Effective as of August 2, 2024, PNM Resources, Inc. changed its name to TXNM Energy, Inc. (the "Company"). The PEP was subsequently renamed the TXNM Energy, Inc. 2023 Performance Equity Plan and the Plan has been renamed the TXNM Energy, Inc. 2023 Long-Term Incentive Plan. By this instrument, the Company desires to amend the Plan as set forth below.

1. This Fifth Amendment shall be effective as of April 14, 2025.

2. Attachment B to the Plan is hereby amended and restated to read as attached as Exhibit 1 hereto.

3. Attachment C to the Plan is hereby amended and restated to read as attached as Exhibit 2 hereto.

4. This Fifth Amendment amends only the provisions of the Plan as noted above, and those provisions not expressly amended shall be considered in full force and effect. Notwithstanding the foregoing, this Fifth Amendment shall supersede the provisions of the Plan to the extent those provisions are inconsistent with the provisions and intent of this Fifth Amendment.

IN WITNESS WHEREOF, the Company has caused this Fifth Amendment to be executed by its duly authorized representative on this ___ day of July, 2025.

**TXNM ENERGY, INC.**

By: /s/ Brian G. Iverson
Brian G. Iverson
General Counsel, Senior Vice President Regulatory and Public Policy, and Corporate Secretary

**Exhibit 1**

**ATTACHMENT B**
**Performance Share Award Opportunity Table**

| Officer Level | Threshold Award | Target Award | Maximum Award |
|---|---|---|---|
| Executive Chair (beginning July 1, 2025); CEO (January 1, 2023 – June 30, 2025) | Performance Shares = 101.5% of base salary | Performance Shares = 203% of base salary | Performance Shares = 406% of base salary |
| CEO and President (beginning July 1, 2025) | Performance Shares = 113.75% of base salary | Performance Shares = 227.5% of base salary | Performance Shares = 455% of base salary |
| President and COO (January 1, 2025 – June 30, 2025) | Performance Shares = 78.75% of base salary | Performance Shares = 157.5% of base salary | Performance Shares = 315% of base salary |
| President and COO (January 1, 2023 – December 31, 2024) | Performance Shares = 57.75% of base salary | Performance Shares = 115.5% of base salary | Performance Shares = 231% of base salary |
| General Counsel, Senior Vice President Regulatory and Public Policy | Performance Shares = 47.25% of base salary | Performance Shares = 94.5% of base salary | Performance Shares = 189% of base salary |
| SVPs, other than SVP Regulatory and Public Policy and SVP Corporate Services | Performance Shares = 29.75% of base salary | Performance Shares = 59.5% of base salary | Performance Shares = 119% of base salary |
| SVP Corporate Services | Performance Shares = 28% of base salary | Performance Shares = 56% of base salary | Performance Shares = 112% of base salary |
| VP, Investor and Community Relations | Performance Shares = 22.75% of base salary | Performance Shares = 45.5% of base salary | Performance Shares = 91% of base salary |
| All other VPs | Performance Shares = 19.25% of base salary | Performance Shares = 38.5% of base salary | Performance Shares = 77% of base salary |

**Exhibit 2**

**ATTACHMENT C**
**Time-Vested Restricted Stock Rights Award Opportunity Table**

| Officer Level | Award |
|---|---|
| Executive Chair | Restricted Stock Rights = 87% of base salary |
| CEO and President | Restricted Stock Rights = 97.5% of base salary |
| General Counsel, Senior Vice President Regulatory and Public Policy | Restricted Stock Rights = 40.5% of base salary |
| SVPs, other than SVP Regulatory and Public Policy and SVP Corporate Services | Restricted Stock Rights = 25.5% of base salary |
| SVP Corporate Services | Restricted Stock Rights = 24% of base salary |
| VP, Investor and Community Relations | Restricted Stock Rights = 19.5% of base salary |
| All other VPs | Restricted Stock Rights = 16.5% of base salary |

Exhibit 10.12
EXECUTION VERSION

PUBLIC SERVICE COMPANY OF NEW MEXICO

$350,000,000

$200,000,000 5.47% Senior Unsecured Notes, Series C, due July 31, 2031
$150,000,000 6.03% Senior Unsecured Notes, Series D, due July 31, 2036

_____

NOTE PURCHASE AGREEMENT

_____

Dated July 31, 2025

**TABLE OF CONTENTS**


| SECTION | HEADING | PAGE |
|---|---|---|
| SECTION 1. | AUTHORIZATION OF NOTES | 1 |
| SECTION 2. | SALE AND PURCHASE OF NOTES | 1 |
| SECTION 3. | CLOSING | 2 |
| SECTION 4. | CONDITIONS TO CLOSING | 2 |
| Section 4.1. | Representations and Warranties | 2 |
| Section 4.2. | Performance; No Default | 2 |
| Section 4.3. | Compliance Certificates | 2 |
| Section 4.4. | Opinions of Counsel | 3 |
| Section 4.5. | Purchase Permitted By Applicable Law, Etc | 3 |
| Section 4.6. | Sale of Other Notes | 3 |
| Section 4.7. | Payment of Special Counsel Fees | 3 |
| Section 4.8. | Private Placement Number | 3 |
| Section 4.9. | Changes in Corporate Structure | 3 |
| Section 4.10. | Funding Instructions | 3 |
| Section 4.11. | Regulatory Approvals | 4 |
| Section 4.12. | Proceedings and Documents | 4 |
| SECTION 5. | REPRESENTATIONS AND WARRANTIES OF THE COMPANY | 4 |
| Section 5.1. | Organization; Power and Authority | 4 |
| Section 5.2. | Authorization, Etc | 4 |
| Section 5.3. | Disclosure | 5 |
| Section 5.4. | Organization; Affiliates | 5 |
| Section 5.5. | Financial Statements; Material Liabilities | 5 |
| Section 5.6. | Compliance with Laws, Other Instruments, Etc | 5 |
| Section 5.7. | Governmental Authorizations, Etc | 6 |
| Section 5.8. | Litigation; Observance of Agreements, Statutes and Orders | 6 |
| Section 5.9. | Taxes | 6 |
| Section 5.10. | Title to Property; Leases | 6 |
| Section 5.11. | Licenses, Permits, Etc | 7 |
| Section 5.12. | Compliance with Employee Benefit Plans | 7 |
| Section 5.13. | Private Offering by the Company | 8 |
| Section 5.14. | Use of Proceeds; Margin Regulations | 8 |
| Section 5.15. | Existing Indebtedness; Future Liens | 8 |
| Section 5.16. | Foreign Assets Control Regulations, Etc | 9 |
| Section 5.17. | Status under Certain Statutes | 10 |
| Section 5.18. | Environmental Matters | 10 |
| Section 5.19. | Solvency | 10 |

| | | |
|---|---|---|
| SECTION 6. | REPRESENTATIONS OF THE PURCHASERS | 10 |
| Section 6.1. | Purchase for Investment | 10 |
| Section 6.2. | Source of Funds | 10 |
| SECTION 7. | INFORMATION AS TO COMPANY | 12 |
| Section 7.1. | Financial and Business Information | 12 |
| Section 7.2. | Officer's Certificate | 14 |
| Section 7.3. | Visitation | 15 |
| Section 7.4. | Electronic Delivery | 15 |
| SECTION 8. | PAYMENT AND PREPAYMENT OF THE NOTES | 16 |
| Section 8.1. | Maturity | 16 |
| Section 8.2. | Optional Prepayments with Make-Whole Amount | 16 |
| Section 8.3. | Allocation of Partial Prepayments | 17 |
| Section 8.4. | Maturity; Surrender, Etc. | 17 |
| Section 8.5. | Purchase of Notes | 17 |
| Section 8.6. | Make-Whole Amount | 18 |
| Section 8.7. | Change of Control | 19 |
| Section 8.8. | Payments Due on Non-Business Days | 20 |
| SECTION 9. | AFFIRMATIVE COVENANTS. | 20 |
| Section 9.1. | Compliance with Laws | 20 |
| Section 9.2. | Insurance | 21 |
| Section 9.3. | Maintenance of Properties | 21 |
| Section 9.4. | Payment of Taxes and Claims | 21 |
| Section 9.5. | Corporate Existence, Etc | 21 |
| Section 9.6. | Books and Records | 22 |
| Section 9.7. | Guarantors | 22 |
| Section 9.8. | Most Favored Lender. | 23 |
| SECTION 10. | NEGATIVE COVENANTS. | 24 |
| Section 10.1. | Transactions with Affiliates | 24 |
| Section 10.2. | Consolidation and Merger | 24 |
| Section 10.3. | Sale or Lease of Assets | 24 |
| Section 10.4. | Line of Business | 25 |
| Section 10.5. | Economic Sanctions, Etc | 25 |
| Section 10.6. | Liens | 25 |
| Section 10.7. | Financial Covenant | 27 |
| SECTION 11. | EVENTS OF DEFAULT | 27 |
| SECTION 12. | REMEDIES ON DEFAULT, ETC | 30 |
| Section 12.1. | Acceleration | 30 |

| | | |
|---|---|---|
| Section 12.2. | Other Remedies | 30 |
| Section 12.3. | Rescission | 31 |
| Section 12.4. | No Waivers or Election of Remedies, Expenses, Etc | 31 |
| SECTION 13. | REGISTRATION; EXCHANGE; SUBSTITUTION OF NOTES | 31 |
| Section 13.1. | Registration of Notes | 31 |
| Section 13.2. | Transfer and Exchange of Notes | 31 |
| Section 13.3. | Replacement of Notes | 32 |
| SECTION 14. | PAYMENTS ON NOTES | 32 |
| Section 14.1. | Place of Payment | 32 |
| Section 14.2. | Payment by Wire Transfer | 33 |
| Section 14.3. | FATCA Information | 33 |
| SECTION 15. | EXPENSES, ETC | 34 |
| Section 15.1. | Transaction Expenses | 34 |
| Section 15.2. | Certain Taxes | 34 |
| Section 15.3. | Survival | 35 |
| SECTION 16. | SURVIVAL OF REPRESENTATIONS AND WARRANTIES; ENTIRE AGREEMENT | 35 |
| SECTION 17. | AMENDMENT AND WAIVER | 35 |
| Section 17.1. | Requirements | 35 |
| Section 17.2. | Solicitation of Holders of Notes | 35 |
| Section 17.3. | Binding Effect, Etc | 36 |
| Section 17.4. | Notes Held by Company, Etc | 36 |
| SECTION 18. | NOTICES | 36 |
| SECTION 19. | REPRODUCTION OF DOCUMENTS | 37 |
| SECTION 20. | CONFIDENTIAL INFORMATION | 37 |
| SECTION 21. | SUBSTITUTION OF PURCHASER | 39 |
| SECTION 22. | MISCELLANEOUS | 39 |
| Section 22.1. | Successors and Assigns | 39 |
| Section 22.2. | Accounting Terms | 39 |
| Section 22.3. | Severability | 40 |
| Section 22.4. | Construction, Etc | 40 |
| Section 22.5. | Counterparts | 40 |
| Section 22.6. | Regulatory Statement | 41 |
| Section 22.7. | Governing Law | 41 |

Section 22.8. Jurisdiction and Process; Waiver of Jury Trial 41

SCHEDULE A — Defined Terms

SCHEDULE 1-A — Form of 5.47% Senior Unsecured Note, Series C, due July 31, 2031

SCHEDULE 1-B — Form of 6.03% Senior Unsecured Note, Series D, due July 31, 2036

SCHEDULE 4.4(a) — Form of Opinions of Various Counsel for the Company

SCHEDULE 5.3 — Disclosure Documents

SCHEDULE 5.4 — Affiliates of the Company and Directors and Senior Officers

SCHEDULE 5.5 — Financial Statements

SCHEDULE 5.15 — Existing Indebtedness

SCHEDULE 14.3 — Form of Tax Compliance Certificate

PURCHASER SCHEDULE — Information Relating to Purchasers

**PUBLIC SERVICE COMPANY OF NEW MEXICO**
**414 SILVER AVE. SW**
**ALBUQUERQUE, NEW MEXICO 87102**

$200,000,000 5.47% Senior Unsecured Notes, Series C, due July 31, 2031
$150,000,000 6.03% Senior Unsecured Notes, Series D, due July 31, 2036

July 31, 2025

TO EACH OF THE PURCHASERS LISTED IN
THE PURCHASER SCHEDULE HERETO:

Ladies and Gentlemen:

Public Service Company of New Mexico, a New Mexico corporation (the **"Company"**), agrees with each of the Purchasers as follows:

**SECTION 1. AUTHORIZATION OF NOTES**.

The Company will authorize the issue and sale of (i) $200,000,000 aggregate principal amount of its 5.47% Senior Unsecured Notes, Series C, due July 31, 2031 (the **"Series C Notes"**) and (ii) $150,000,000 aggregate principal amount of its 6.03% Senior Unsecured Notes, Series D, due July 31, 2036 (the **"Series D Notes"**; collectively with the Series C Notes the **"Notes"**). The Notes shall be substantially in the forms set out in Schedule 1-A and Schedule 1-B, as applicable. Certain capitalized and other terms used in this Agreement are defined in Schedule A and, for purposes of this Agreement, the rules of construction set forth in Section 22.4 shall govern. References to **"Series"** of Notes shall refer to the Series C Notes and the Series D Notes or all, as the context may require.

**SECTION 2. SALE AND PURCHASE OF NOTES**.

Subject to the terms and conditions of this Agreement, the Company will issue and sell to each Purchaser and each Purchaser will purchase from the Company, at the Closing provided for in Section 3, Notes in the principal amount and series specified opposite such Purchaser's name in the Purchaser Schedule at the purchase price of 100% of the principal amount thereof. The Purchasers' obligations hereunder are several and not joint obligations and no Purchaser shall have any liability to any Person for the performance or non-performance of any obligation by any other Purchaser hereunder.

**SECTION 3. CLOSING**.

The execution and delivery of this Agreement will be made at the office of Chapman and Cutler LLP, 320 S. Canal Street, Chicago, Illinois 60606 on July 31, 2025 (the "**Execution Date**").

The sale and purchase of the Notes to be purchased by each Purchaser shall occur at the offices of Chapman and Cutler LLP, 320 S. Canal Street, Chicago, Illinois 60606, at 7:00 a.m. Chicago time, on July 31, 2025 (the "**Closing**"). At the Closing the Company will deliver to each Purchaser the Notes of such Series to be purchased by such Purchaser in the form of a single Note of such Series (or such greater number of Notes in denominations of at least $100,000 as such Purchaser may request) dated the date of the Closing and registered in such Purchaser's name (or in the name of its nominee), against delivery by such Purchaser to the Company or its order of immediately available funds in the amount of the purchase price therefor by wire transfer of immediately available funds for the account of the Company in accordance with the instructions delivered by the Company pursuant to Section 4.10. If at the Closing the Company shall fail to tender such Notes to any Purchaser as provided above in this Section 3, or any of the conditions specified in Section 4 shall not have been fulfilled to such Purchaser's reasonable satisfaction, such Purchaser shall, at its election, be relieved of all further obligations under this Agreement, without thereby waiving any rights such Purchaser may have by reason of such failure by the Company to tender such Notes or any of the conditions specified in Section 4 not having been fulfilled to such Purchaser's satisfaction.

**SECTION 4. CONDITIONS TO CLOSING**.

Each Purchaser's obligation to execute and deliver this Agreement on the Execution Date and the obligations of each Purchaser to purchase and pay for the Notes to be sold to such Purchaser at the Closing is subject to the fulfillment to such Purchaser's reasonable satisfaction, prior to or at the Closing, of the following conditions:

**Section 4.1. Representations and Warranties**. The representations and warranties of the Company in this Agreement shall be correct when made and at the Closing.

**Section 4.2. Performance; No Default**. The Company shall have performed and complied with all agreements and conditions contained in this Agreement required to be performed or complied with by it prior to or at the Closing. Before and after giving effect to the issuance and sale of the Notes (and the application of the proceeds thereof as contemplated by Section 5.14) no Default or Event of Default shall have occurred and be continuing.

**Section 4.3. Compliance Certificates**.

(a) *Officer's Certificate*. The Company shall have delivered to such Purchaser an Officer's Certificate, dated the date of the Closing, certifying that the conditions specified in Sections 4.1, 4.2 and 4.9 have been fulfilled.

(b) *Secretary's Certificate*. The Company shall have delivered to such Purchaser a certificate of its Secretary or Assistant Secretary, dated the date of the Closing, certifying as to

(i) the resolutions attached thereto and other corporate proceedings relating to the authorization, execution and delivery of the Notes and this Agreement and (ii) the Company's organizational documents as then in effect.

**Section 4.4. Opinions of Counsel**. Such Purchaser shall have received opinions in form and substance satisfactory to such Purchaser, dated the date of the Closing (a) from Troutman Pepper Locke LLP, counsel for the Company, and in-house legal counsel to the Company, covering the matters set forth in Schedule 4.4(a) and covering such other matters incident to the transactions contemplated hereby as such Purchaser or its counsel may reasonably request (and the Company hereby instructs its counsel to deliver such opinion to the Purchasers) and (b) from Chapman and Cutler LLP, the Purchasers' special counsel in connection with such transactions, covering such matters incident to such transactions as such Purchaser may reasonably request.

**Section 4.5. Purchase Permitted By Applicable Law, Etc**. On the date of the Closing such Purchaser's purchase of Notes shall (a) be permitted by the laws and regulations of each jurisdiction to which such Purchaser is subject, without recourse to provisions (such as section 1405(a)(8) of the New York Insurance Law) permitting limited investments by insurance companies without restriction as to the character of the particular investment, (b) not violate any applicable law or regulation (including Regulation T, U or X of the Board of Governors of the Federal Reserve System) and (c) not subject such Purchaser to any tax, penalty or liability under or pursuant to any applicable law or regulation, which law or regulation was not in effect on the date hereof. If requested by such Purchaser, such Purchaser shall have received an Officer's Certificate certifying as to such matters of fact as such Purchaser may reasonably specify to enable such Purchaser to determine whether such purchase is so permitted.

**Section 4.6. Sale of Other Notes**. Contemporaneously with the Closing, the Company shall sell to each other Purchaser and each other Purchaser shall purchase the Notes to be purchased by it at the Closing as specified in the Purchaser Schedule.

**Section 4.7. Payment of Special Counsel Fees**. Without limiting Section 15.1, the Company shall have paid on or before the date of the Closing the fees, charges and disbursements of the Purchasers' special counsel referred to in Section 4.4 to the extent reflected in a statement of such counsel rendered to the Company at least one Business Day prior to the date of the Closing.

**Section 4.8. Private Placement Number**. A Private Placement Number issued by Standard & Poor's CUSIP Service Bureau (in cooperation with the SVO) shall have been obtained for each Series of Notes.

**Section 4.9. Changes in Corporate Structure**. Other than transactions permitted by Section 10, the Company shall not have changed its jurisdiction of incorporation or organization, as applicable, or been a party to any merger or consolidation or succeeded to all or any substantial part of the liabilities of any other entity, at any time following the date of the most recent financial statements referred to in Schedule 5.5.

**Section 4.10. Funding Instructions**. At least five (5) Business Days prior to the date of the Closing, each Purchaser shall have received written wire transfer instructions signed by a

Responsible Officer on letterhead of the Company including (i) the name and address of the transferee bank, (ii) such transferee bank's ABA number and (iii) the account name and number into which the purchase price for the Notes is to be deposited. Each Purchaser has the right, but not the obligation, upon written notice (which may be by email) to the Company, to elect to deliver a micro deposit (less than $50.00) to the account identified in the written instructions no later than two (2) Business Days prior to Closing. If a Purchaser delivers a micro deposit, a Responsible Officer must verbally verify the receipt and amount of the micro deposit to such Purchaser on a telephone call initiated by such Purchaser prior to Closing. The Company shall not be obligated to return the amount of the micro deposit, nor will the amount of the micro deposit be netted against the Purchaser's purchase price of the Notes.

**Section 4.11. Regulatory Approvals.** The issue and sale of the Notes hereunder shall have been duly authorized by each regulatory authority whose consent or approval shall be required for the issue and sale of the Notes to such Purchaser and any orders issued pursuant thereto shall be in full force and effect as of the Closing and all appeal periods, if any, shall have expired; *provided, however,* that with respect to the registration requirements of section 5 of the Securities Act or to the registration requirements of any Securities or blue sky laws of any applicable jurisdiction, satisfaction of the foregoing condition assumes the accuracy of the representations and warranties of the Purchasers contained in Section 6.1 of this Agreement. Such Purchaser shall have received copies of such consents, approvals or orders including a copy of the approval of the NMPRC authorizing this transaction.

**Section 4.12. Proceedings and Documents**. All corporate and other proceedings in connection with the transactions contemplated by this Agreement and all documents and instruments incident to such transactions shall be satisfactory to such Purchaser and its special counsel, and such Purchaser and its special counsel shall have received all such counterpart originals or certified or other copies of such documents as such Purchaser or such special counsel may reasonably request.

**SECTION 5. REPRESENTATIONS AND WARRANTIES OF THE COMPANY**.

The Company represents and warrants to each Purchaser as of the Closing, that:

**Section 5.1. Organization; Power and Authority**. The Company is a corporation duly organized, validly existing and in good standing under the laws of its jurisdiction of incorporation, and is duly qualified as a foreign corporation and is in good standing in each jurisdiction in which such qualification is required by law, other than those jurisdictions as to which the failure to be so qualified or in good standing would not, individually or in the aggregate, reasonably be expected to have a Material Adverse Effect. The Company has the corporate power and authority to own or hold under lease the properties it purports to own or hold under lease, to transact the business it transacts, to execute and deliver this Agreement and the Notes and to perform the provisions hereof and thereof.

**Section 5.2. Authorization, Etc**. This Agreement and the Notes have been duly authorized by all necessary corporate action on the part of the Company, and this Agreement constitutes, and upon execution and delivery thereof each Note will constitute, a legal, valid and

binding obligation of the Company enforceable against the Company in accordance with its terms, except as such enforceability may be limited by (i) applicable bankruptcy, insolvency, reorganization, moratorium or other similar laws affecting the enforcement of creditors' rights generally and (ii) general principles of equity (regardless of whether such enforceability is considered in a proceeding in equity or at law).

**Section 5.3. Disclosure**. This Agreement, the financial statements listed in Schedule 5.5 and the documents, certificates or other writings delivered to the Purchasers by or on behalf of the Company on or prior to July 17, 2025 in connection with the transactions contemplated hereby and identified in Schedule 5.3 (this Agreement and such documents, certificates or other writings and such financial statements delivered to each Purchaser being referred to, collectively, as the **"Disclosure Documents"**), taken as a whole, do not contain any untrue statement of a material fact or omit to state any material fact necessary to make the statements therein not misleading in light of the circumstances under which they were made. Except as disclosed in the Disclosure Documents, since March 31, 2025, there has been no change in the financial condition, operations, business, or properties of the Company or any Subsidiary except changes that would not, individually or in the aggregate, reasonably be expected to have a Material Adverse Effect.

**Section 5.4. Organization; Affiliates**. Schedule 5.4 contains (except as noted therein) complete and correct lists of (i) the Company's Affiliates and (ii) the Company's directors and senior officers. The Company has no active Subsidiaries as of the date of this Agreement, other than a bankruptcy remote special purpose Subsidiary formed and operated for the limited purposes of a State Approved Securitization.

**Section 5.5. Financial Statements; Material Liabilities**. The Company has delivered to each Purchaser copies of the financial statements of the Company and its Subsidiaries listed on Schedule 5.5. All of such financial statements (including in each case the related schedules and notes) fairly present in all material respects the consolidated financial position of the Company and its Subsidiaries as of the respective dates specified in such Schedule and the consolidated results of their operations and cash flows for the respective periods so specified and have been prepared in accordance with GAAP consistently applied throughout the periods involved except as set forth in the notes thereto (subject, in the case of any interim financial statements, to normal year-end adjustments).

**Section 5.6. Compliance with Laws, Other Instruments, Etc**. The execution, delivery and performance by the Company of this Agreement and the Notes will not (i) contravene, result in any breach of, or constitute a default under, or result in the creation of any Lien in respect of any property of the Company or any Subsidiary under, any indenture, mortgage, deed of trust, loan, purchase or credit agreement, lease, corporate charter, regulations or by-laws, shareholders agreement or any other agreement or instrument to which the Company or any Subsidiary is bound or by which the Company or any Subsidiary or any of their respective properties may be bound or affected, the violation of which would have or would be reasonably be expected to have a Material Adverse Effect, (ii) conflict with or result in a breach of any of the terms, conditions or provisions of any order, judgment, decree or ruling of any court, arbitrator or Governmental Authority applicable to the Company or any Subsidiary or (iii) violate any provision of any statute or other rule or regulation of any Governmental Authority applicable to the Company or any Subsidiary.

**Section 5.7. Governmental Authorizations, Etc**. No consent, approval, authorization or order of, or registration, filing or declaration with, any Governmental Authority or body having jurisdiction over the Company is required in connection with the execution, delivery or performance by the Company of this Agreement or the Notes, except for (i) such approval by the NMPRC as has been obtained and (ii) required notice filings related to this Agreement with the SEC or the NMPRC; *provided* that with respect to the registration requirements of section 5 of the Securities Act or to the registration requirements of any Securities or blue sky laws of any applicable jurisdiction, the foregoing representation and warranty assumes the accuracy of the representations and warranties of the Purchasers contained in Section 6.1 of this Agreement.

**Section 5.8. Litigation; Observance of Agreements, Statutes and Orders**. (a) Except as disclosed in the Disclosure Documents, there are no actions, suits, investigations or proceedings pending or, to the knowledge of the Company, threatened against or affecting the Company or any Subsidiary or any property of the Company or any Subsidiary in any court or before any arbitrator of any kind or before or by any Governmental Authority that would, individually or in the aggregate, reasonably be expected to have a Material Adverse Effect.

(b) Neither the Company nor any Subsidiary is (i) in violation of any order, judgment, decree or ruling of any court, any arbitrator of any kind or any Governmental Authority or (ii) in violation of any applicable law, ordinance, rule or regulation of any Governmental Authority (including Environmental Laws, the USA PATRIOT Act or any of the other laws and regulations that are referred to in Section 5.16), which default or violation would, individually or in the aggregate, reasonably be expected to have a Material Adverse Effect.

**Section 5.9. Taxes**. The Company and its Subsidiaries have filed all tax returns that are required to have been filed in any jurisdiction, and have paid all taxes shown to be due and payable on such returns and all other taxes and assessments payable by them, to the extent such taxes and assessments have become due and payable and before they have become delinquent, except for any taxes and assessments (i) the amount of which, individually or in the aggregate, is not Material or (ii) the amount, applicability or validity of which is currently being contested in good faith by appropriate proceedings and with respect to which the Company or a Subsidiary, as the case may be, has established adequate reserves in accordance with GAAP. The charges, accruals and reserves on the books of the Company and its Subsidiaries in respect of U.S. federal, state or other taxes for all fiscal periods are adequate. The U.S. federal income tax liabilities of the Company and its Subsidiaries have been finally determined (whether by reason of completed audits or the statute of limitations having run) for all fiscal years up to and including the fiscal year ended December 31, 2021.

**Section 5.10. Title to Property; Leases**. The Company and its Subsidiaries have good and sufficient title to their respective properties that individually or in the aggregate are Material, including all such properties reflected in the most recent audited balance sheet referred to in Section 5.5 or purported to have been acquired by the Company or any Subsidiary after such date (except as sold or otherwise disposed of in the ordinary course of business), in each case free and clear of Liens prohibited by this Agreement except for those defects in title and Liens that, individually or in the aggregate, would not have a Material Adverse Effect. All Material leases are valid and subsisting and are in full force and effect in all material respects.

**Section 5.11. Licenses, Permits, Etc**. Except as disclosed in the Disclosure Documents, the Company and its Subsidiaries own or possess all licenses, permits, franchises, authorizations, patents, copyrights, proprietary software, service marks, trademarks and trade names, or rights thereto, that individually or in the aggregate are Material, without known conflict with the rights of others, except for those conflicts that, individually or in the aggregate, would not have a Material Adverse Effect.

**Section 5.12. Compliance with Employee Benefit Plans**. (a) The Company and each ERISA Affiliate have operated and administered each Plan in compliance with all applicable laws except for such instances of noncompliance as have not resulted in and would not, individually or in the aggregate, reasonably be expected to result in a Material Adverse Effect. Neither the Company nor any ERISA Affiliate has incurred any liability (other than liabilities for PBGC premiums that have been or will be paid in a timely manner) pursuant to Titles I or IV of ERISA or the penalty or excise tax provisions of the Code relating to employee benefit plans (as defined in section 3 of ERISA), and no event, transaction or condition relating to such employee benefit plans has occurred or exists that would, individually or in the aggregate, reasonably be expected to result in the incurrence of any such liability by the Company or any ERISA Affiliate, or in the imposition of any Lien on any of the rights, properties or assets of the Company or any ERISA Affiliate, in either case pursuant to Titles I or IV of ERISA or to section 430(k) of the Code or to any such penalty or excise tax provisions under the Code or federal law or section 4068 of ERISA or by the granting of a security interest in connection with the amendment of a Plan, other than such liabilities or Liens as would not be individually or in the aggregate Material.

(b) The present value of the aggregate benefit liabilities under each of the Plans (other than Multiemployer Plans), determined as of the last valuation date for which results have been certified on the basis of the actuarial assumptions specified for funding purposes in such Plan's most recent actuarial valuation report, did not exceed the aggregate current value of the assets of such Plan allocable to such benefit liabilities by more than $70,000,000 in the case of any single Plan and by more than $70,000,000 in the aggregate for all Plans. The term **"benefit liabilities"** has the meaning specified in section 4001 of ERISA and the terms **"current value"** and **"present value"** have the meaning specified in section 3 of ERISA.

(c) The Company and its ERISA Affiliates have not incurred withdrawal liabilities (and are not subject to contingent withdrawal liabilities) under section 4201 or 4204 of ERISA in respect of Multiemployer Plans that individually or in the aggregate are Material.

(d) The present value (determined using actuarial and other assumptions which are reasonable with respect to the benefits provided and the employees participating) of the liability of the Company and each ERISA Affiliate for post-retirement welfare benefits to be provided to their current and former employees under Plans which are welfare benefit plans (as defined in section 3(1) of ERISA), net of all assets under all such Plans allocable to such benefits, are reflected on the financial statements in accordance with Financial Accounting Standards Board Accounting Standards Codification Topic 715-60.

(e) The execution and delivery of this Agreement and the issuance and sale of the Notes hereunder will not involve any transaction that is subject to the prohibitions of section 406 of

ERISA or in connection with which a tax could be imposed pursuant to section 4975(c)(1)(A)-(D) of the Code. The representation by the Company to each Purchaser in the first sentence of this Section 5.12(e) is made in reliance upon and subject to the accuracy of such Purchaser's representation in Section 6.2 as to the sources of the funds to be used to pay the purchase price of the Notes to be purchased by such Purchaser.

(f) The Company and its Subsidiaries do not have any Non-U.S. Plans.

**Section 5.13. Private Offering by the Company**. Neither the Company nor anyone acting on its behalf has offered the Notes or any similar Securities for sale to, or solicited any offer to buy the Notes or any similar Securities from, or otherwise approached or negotiated in respect thereof with, any Person other than sixty-five (65) Institutional Investors (including the Purchasers), each of which has been offered the Notes at a private sale for investment. Neither the Company nor anyone acting on its behalf has taken, or will take, any action that would subject the issuance or sale of the Notes to the registration requirements of section 5 of the Securities Act or to the registration requirements of any Securities or blue sky laws of any applicable jurisdiction.

**Section 5.14. Use of Proceeds; Margin Regulations**. The Company will apply the proceeds of the sale of the Notes hereunder for repayment of indebtedness, funding of capital expenditures, and general corporate purposes. No part of the proceeds from the sale of the Notes hereunder will be used, directly or indirectly, for the purpose of buying or carrying any margin stock within the meaning of Regulation U of the Board of Governors of the Federal Reserve System (12 CFR 221), or for the purpose of buying or carrying or trading in any Securities under such circumstances as to involve the Company in a violation of Regulation X of said Board (12 CFR 224) or to involve any broker or dealer in a violation of Regulation T of said Board (12 CFR 220). Margin stock does not constitute more than 5% of the value of the consolidated assets of the Company and its Subsidiaries and the Company does not have any present intention that margin stock will constitute more than 5% of the value of such assets. As used in this Section, the terms **"margin stock"** and **"purpose of buying or carrying"** shall have the meanings assigned to them in said Regulation U.

**Section 5.15. Existing Indebtedness; Future Liens**. (a) Except as described therein, Schedule 5.15 sets forth a complete and correct list of all individual items of outstanding Indebtedness of the Company and its Subsidiaries that exceeds $40,000,000 (or in the case of Contingent Obligations, such Contingent Obligations guaranteeing or otherwise in respect of obligations that exceed $40,000,000 described in the definition of "Indebtedness") as of March 31, 2025 (including descriptions of the obligors and obligees, principal amounts outstanding, any collateral therefor and any Guaranty thereof), since which date there has been no Material change in the amounts, interest rates, sinking funds, installment payments or maturities of the Indebtedness of the Company or its Subsidiaries. Neither the Company nor any Subsidiary is in default and no waiver of default is currently in effect, in the payment of any principal or interest on any Indebtedness of the Company or such Subsidiary and no event or condition exists with respect to any Indebtedness of the Company or any Subsidiary the outstanding principal amount of which exceeds $40,000,000 that would permit (or that with notice or the lapse of time, or both, would permit) one or more Persons to cause such Indebtedness to become due and payable before its stated maturity or before its regularly scheduled dates of payment.

(b) Except as disclosed in Schedule 5.15 or as permitted in Section 10.6, neither the Company nor any Subsidiary has agreed or consented to cause or permit any of its property, whether now owned or hereafter acquired, to be subject to a Lien that secures Indebtedness or to cause or permit in the future (upon the happening of a contingency or otherwise) any of its property, whether now owned or hereafter acquired, to be subject to a Lien that secures Indebtedness.

(c) Neither the Company nor any Subsidiary is a party to, or otherwise subject to any provision contained in, any instrument evidencing Indebtedness of the Company or such Subsidiary, any agreement relating thereto or any other agreement (including its charter or any other organizational document) which limits the amount of, or otherwise imposes restrictions on the incurring of, Indebtedness of the Company, except as disclosed in Schedule 5.15.

**Section 5.16. Foreign Assets Control Regulations, Etc**. (a) Neither the Company nor any Controlled Entity (i) is a Blocked Person, (ii) has been notified that its name appears or may in the future appear on a State Sanctions List or (iii) is a target of sanctions that have been imposed by the United Nations or the European Union.

(b) Neither the Company nor any Controlled Entity (i) has violated, been found in violation of, or been charged or convicted under, any applicable U.S. Economic Sanctions Laws, Anti-Money Laundering Laws or Anti-Corruption Laws or (ii) to the Company's knowledge, is under investigation by any Governmental Authority for possible violation of any U.S. Economic Sanctions Laws, Anti-Money Laundering Laws or Anti-Corruption Laws.

(c) No part of the proceeds from the sale of the Notes hereunder:

(i) constitutes or will constitute funds obtained on behalf of any Blocked Person in violation of applicable law or will otherwise be used by the Company or any Controlled Entity, directly or indirectly, (A) in connection with any investment in, or any transactions or dealings with, any Blocked Person or any Sanctioned Jurisdiction in violation of applicable law, (B) for any purpose that would cause any Purchaser to be in violation of any U.S. Economic Sanctions Laws or (C) otherwise in violation of any U.S. Economic Sanctions Laws;

(ii) will be used, directly or indirectly, in violation of, or cause any Purchaser to be in violation of, any applicable Anti-Money Laundering Laws; or

(iii) will be used, directly or indirectly, for the purpose of making any improper payments, including bribes, to any Governmental Official or commercial counterparty in order to obtain, retain or direct business or obtain any improper advantage, in each case which would be in violation of, or cause any Purchaser to be in violation of, any applicable Anti-Corruption Laws.

(d) The Company has established procedures and controls which it reasonably believes are adequate (and otherwise in compliance with applicable law) to ensure that the Company and

each Controlled Entity is and will continue to be in compliance with all applicable U.S. Economic Sanctions Laws, Anti-Money Laundering Laws and Anti-Corruption Laws.

**Section 5.17. Status under Certain Statutes**. Neither the Company nor any Subsidiary is subject to regulation under the Investment Company Act of 1940, the ICC Termination Act of 1995, or Section 204 of the Federal Power Act, nor is the Company or any Subsidiary a holding company for the purposes of the Public Utility Holding Company Act of 2005.

**Section 5.18. Environmental Matters**. Except as would not result or reasonably be expected to result in a Material Adverse Effect: (a) each of the real properties of the Company and its Subsidiaries and all operations at such real properties are in substantial compliance with all applicable Environmental Laws, (b) there is no undocumented or unreported violation of any Environmental Laws with respect to such real properties or the businesses operated by the Company and its Subsidiaries that the Company is aware of, and (c) to the Company's knowledge, there are no conditions relating to such businesses or real properties that have given rise to or would reasonably be expected to give rise to a liability under any applicable Environmental Laws or to any Environmental Claim.

**Section 5.19. Solvency**. The Company is and, after the issuance of Notes and the consummation of the transactions contemplated by this Agreement, will be, Solvent.

**SECTION 6. REPRESENTATIONS OF THE PURCHASERS**.

**Section 6.1. Purchase for Investment**. Each Purchaser severally represents that it is (a) purchasing the Notes for its own account or for one or more separate accounts maintained by such Purchaser or for the account of one or more pension or trust funds and not with a view to the distribution thereof, *provided* that the disposition of such Purchaser's or their property shall at all times be within such Purchaser's or their control and (b) it is an "accredited investor" (as defined in Rule 501(a)(1), (2), (3) or (7) under the Securities Act). Each Purchaser understands that the Notes have not been registered under the Securities Act and may be resold only if registered pursuant to the provisions of the Securities Act or if an exemption from registration is available, except under circumstances where neither such registration nor such an exemption is required by law, and that the Company is not required to register the Notes.

**Section 6.2. Source of Funds**. Each Purchaser severally represents that at least one of the following statements is an accurate representation as to each source of funds (a **"Source"**) to be used by such Purchaser to pay the purchase price of the Notes to be purchased by such Purchaser hereunder:

(a) the Source is an "insurance company general account" (as the term is defined in the United States Department of Labor's Prohibited Transaction Exemption (**"PTE"**) 95-60) in respect of which the reserves and liabilities (as defined by the annual statement for life insurance companies approved by the NAIC (the **"NAIC Annual Statement"**)) for the general account contract(s) held by or on behalf of any employee benefit plan together with the amount of the reserves and liabilities for the general account contract(s) held by or on behalf of any other employee benefit plans maintained by the

same employer (or affiliate thereof as defined in PTE 95-60) or by the same employee organization in the general account do not exceed 10% of the total reserves and liabilities of the general account (exclusive of separate account liabilities) plus surplus as set forth in the NAIC Annual Statement filed with such Purchaser's state of domicile; or

(b) the Source is a separate account that is maintained solely in connection with such Purchaser's fixed contractual obligations under which the amounts payable, or credited, to any employee benefit plan (or its related trust) that has any interest in such separate account (or to any participant or beneficiary of such plan (including any annuitant)) are not affected in any manner by the investment performance of the separate account; or

(c) the Source is either (i) an insurance company pooled separate account, within the meaning of PTE 90-1 or (ii) a bank collective investment fund, within the meaning of the PTE 91-38 and, except as disclosed by such Purchaser to the Company in writing pursuant to this clause (c), no employee benefit plan or group of plans maintained by the same employer or employee organization beneficially owns more than 10% of all assets allocated to such pooled separate account or collective investment fund; or

(d) the Source constitutes assets of an "investment fund" (within the meaning of Part VI of PTE 84-14 (the **"QPAM Exemption"**)) managed by a "qualified professional asset manager" or "QPAM" (within the meaning of Part VI of the QPAM Exemption), no employee benefit plan's assets that are managed by the QPAM in such investment fund, when combined with the assets of all other employee benefit plans established or maintained by the same employer or by an affiliate (within the meaning of Part VI(c)(1) of the QPAM Exemption) of such employer or by the same employee organization and managed by such QPAM, represent more than 20% of the total client assets managed by such QPAM, the conditions of Part I(c) and (g) of the QPAM Exemption are satisfied, neither the QPAM nor a person controlling or controlled by the QPAM maintains an ownership interest in the Company that would cause the QPAM and the Company to be "related" within the meaning of Part VI(h) of the QPAM Exemption and (i) the identity of such QPAM and (ii) the names of any employee benefit plans whose assets in the investment fund, when combined with the assets of all other employee benefit plans established or maintained by the same employer or by an affiliate (within the meaning of Part VI(c)(1) of the QPAM Exemption) of such employer or by the same employee organization, represent 10% or more of the assets of such investment fund, have been disclosed to the Company in writing pursuant to this clause (d); or

(e) the Source constitutes assets of a "plan(s)" (within the meaning of Part IV(h) of PTE 96-23 (the **"INHAM Exemption"**)) managed by an "in-house asset manager" or "INHAM" (within the meaning of Part IV(a) of the INHAM Exemption), the conditions of Part I(a), (g) and (h) of the INHAM Exemption are satisfied, neither the INHAM nor a person controlling or controlled by the INHAM (applying the definition of "control" in Part IV(d)(3) of the INHAM Exemption) owns a 10% or more interest in the Company and (i) the identity of such INHAM and (ii) the name(s) of the employee benefit

plan(s) whose assets constitute the Source have been disclosed to the Company in writing pursuant to this clause (e); or

(f) the Source is a governmental plan; or

(g) the Source is one or more employee benefit plans, or a separate account or trust fund comprised of one or more employee benefit plans, each of which has been identified to the Company in writing pursuant to this clause (g); or

(h) the Source does not include assets of any employee benefit plan, other than a plan exempt from the coverage of ERISA.

As used in this Section 6.2, the terms **"employee benefit plan," "governmental plan,"** and **"separate account"** shall have the respective meanings assigned to such terms in section 3 of ERISA.

**SECTION 7. INFORMATION AS TO COMPANY**

**Section 7.1. Financial and Business Information**. The Company shall deliver to each Purchaser and each holder of a Note that is an Institutional Investor:

(a) *Quarterly Statements* — within sixty (60) days (or, if earlier, the date by which such financial statements are required to be delivered under any Material Credit Facility or the date on which such corresponding financial statements are delivered under any Material Credit Facility if such delivery occurs earlier than such required delivery date) after the end of each Fiscal Quarter in each Fiscal Year of the Company (other than the last quarterly fiscal period of each such Fiscal Year), duplicate copies of

(i) a consolidated balance sheet of the Company and its Subsidiaries as at the end of such Fiscal Quarter,

(ii) consolidated statements of income of the Company and its Subsidiaries, for such Fiscal Quarter and (in the case of the second and third quarters) for the portion of the Fiscal Year ending with such Fiscal Quarter, and

(iii) consolidated statements of changes in shareholders' equity and cash flows of the Company and its Subsidiaries for the portion of the Fiscal Year ending with such Fiscal Quarter,

setting forth in each case in comparative form the figures for the corresponding periods in the previous fiscal year, all in reasonable detail, prepared in accordance with GAAP applicable to quarterly financial statements generally, and certified by a Senior Financial Officer as fairly presenting, in all material respects, the financial position of the companies being reported on and their results of operations and cash flows, subject to changes resulting from year-end adjustments;

(b) *Annual Statements* — within one hundred twenty (120) days (or, if earlier, the date by which such financial statements are required to be delivered under any Material Credit Facility or the date on which such corresponding financial statements are delivered under any Material Credit Facility if such delivery occurs earlier than such required delivery date) after the end of each Fiscal Year of the Company, duplicate copies of

(i) a consolidated balance sheet of the Company and its Subsidiaries as at the end of such Fiscal Year, and

(ii) consolidated statements of income, changes in shareholders' equity and cash flows of the Company and its Subsidiaries for such Fiscal Year,

setting forth in each case in comparative form the figures for the previous Fiscal Year, all in reasonable detail, prepared in accordance with GAAP, and accompanied by an opinion thereon (without a "going concern" or similar qualification or exception and without any qualification or exception as to the scope of the audit on which such opinion is based) of independent public accountants of recognized national standing, which opinion shall state that such financial statements present fairly, in all material respects, the financial position of the companies being reported upon and their results of operations and cash flows and have been prepared in conformity with GAAP, and that the examination of such accountants in connection with such financial statements has been made in accordance with generally accepted auditing standards, and that such audit provides a reasonable basis for such opinion in the circumstances;

(c) *SEC and Other Reports* — promptly upon their becoming available, one copy of (i) each financial statement, report, notice, proxy statement or similar document sent by the Company or any Subsidiary (x) to its creditors under any Material Credit Facility (excluding information sent to such creditors in the ordinary course of administration of a credit facility, such as information relating to pricing and borrowing availability) or (y) to its public Securities holders generally, and (ii) each regular or periodic report, each registration statement (without exhibits except as expressly requested by such holder), and each prospectus and all amendments thereto filed by the Company or any Subsidiary with the SEC;

(d) *Notice of Default or Event of Default* — promptly, and in any event within ten (10) days after a Responsible Officer becoming aware of the existence of any Default or Event of Default or that any Person has given any notice or taken any action with respect to a claimed default hereunder or that any Person has given any notice or taken any action with respect to a claimed default of the type referred to in Section 11(f), a written notice specifying the nature and period of existence thereof and what action the Company is taking or proposes to take with respect thereto;

(e) *Employee Benefits Matters* — promptly, and in any event within ten (10) days after a Responsible Officer becoming aware of any of the following, a written notice

setting forth the nature thereof and the action, if any, that the Company or an ERISA Affiliate proposes to take with respect thereto:

(i) with respect to any Plan, any reportable event, as defined in section 4043(c) of ERISA and the regulations thereunder, for which notice thereof has not been waived pursuant to such regulations as in effect on the date hereof;

(ii) the taking by the PBGC of steps to institute, or the threatening by the PBGC of the institution of, proceedings under section 4042 of ERISA for the termination of, or the appointment of a trustee to administer, any Plan, or the receipt by the Company or any ERISA Affiliate of a notice from a Multiemployer Plan that such action has been taken by the PBGC with respect to such Multiemployer Plan; or

(iii) any event, transaction or condition that could result in the incurrence of any liability by the Company or any ERISA Affiliate pursuant to Title I or IV of ERISA or the penalty or excise tax provisions of the Code relating to employee benefit plans, or in the imposition of any Lien on any of the rights, properties or assets of the Company or any ERISA Affiliate pursuant to Title I or IV of ERISA or such penalty or excise tax provisions, if such liability or Lien, taken together with any other such liabilities or Liens then existing, would reasonably be expected to have a Material Adverse Effect;

(f) *Debt Ratings* — prompt notice of any change in its Debt Ratings; and

(g) *Requested Information* — with reasonable promptness, such other data and information relating to the business, operations, affairs, financial condition, assets or properties of the Company or any of its Subsidiaries (including actual copies of the Company's Form 10-Q and Form 10-K, if any, filed with the SEC) or relating to the ability of the Company to perform its obligations hereunder and under the Notes as from time to time may be reasonably requested by any such Purchaser or holder of a Note; *provided* that any such requested information is subject to the confidentiality provisions set forth in Section 20.

**Section 7.2. Officer's Certificate**. In connection with each set of financial statements delivered to a Purchaser or holder of a Note pursuant to Section 7.1(a) or Section 7.1(b), the Company shall deliver on or before the deadline set forth in Section 7.1(a) or Section 7.1(b), as applicable, a certificate of a Senior Financial Officer:

(a) *Covenant Compliance* — setting forth the information from such financial statements that is required in order to establish whether the Company was in compliance with the requirements of Section 10 during the quarterly or annual period covered by the financial statements then being furnished (including with respect to each such provision that involves mathematical calculations, the information from such financial statements that is required to perform such calculations) and detailed calculations of the maximum or minimum amount, ratio or percentage, as the case may be, permissible under the terms of

such Section, and the calculation of the amount, ratio or percentage then in existence. In the event that the Company or any Subsidiary has made an election to measure any financial liability using fair value (which election is being disregarded for purposes of determining compliance with this Agreement pursuant to Section 22.2) as to the period covered by any such financial statement, such Senior Financial Officer's certificate as to such period shall include a reconciliation from GAAP with respect to such election;

(b) *Event of Default* — certifying that such Senior Financial Officer has reviewed the relevant terms hereof and has made, or caused to be made, under his or her supervision, a review of the transactions and conditions of the Company and its Subsidiaries from the beginning of the quarterly or annual period covered by the statements then being furnished to the date of the certificate and that such review shall not have disclosed the existence during such period of any condition or event that constitutes a Default or an Event of Default or, if any such condition or event existed or exists (including any such event or condition resulting from the failure of the Company or any Subsidiary to comply with any Environmental Law), specifying the nature and period of existence thereof and what action the Company shall have taken or proposes to take with respect thereto; and

(c) *Guarantors* – setting forth a list of all Subsidiaries and other entities that are Guarantors and certifying that each Subsidiary or other entity that is required to be a Guarantor pursuant to Section 9.7 is a Guarantor, in each case, as of the date of such certificate of Senior Financial Officer.

**Section 7.3. Visitation**. The Company shall permit the representatives of each Purchaser and holder of a Note that is an Institutional Investor:

(a) *No Default* — if no Default or Event of Default then exists, at the expense of such Purchaser or holder and upon reasonable prior notice to the Company, to visit the principal executive office of the Company, to discuss the affairs, finances and accounts of the Company and its Subsidiaries with the Company's officers, and (with the consent of the Company, which consent will not be unreasonably withheld) to visit the other offices and properties of the Company and each Subsidiary, all at such reasonable times and as often as may be reasonably requested in writing; and

(b) *Default* — if a Default or Event of Default then exists, at the expense of the Company to visit and inspect any of the offices or properties of the Company or any Subsidiary, to examine all their respective books of account, records, reports and other papers, to make copies and extracts therefrom, and to discuss their respective affairs, finances and accounts with their respective officers and independent public accountants (and by this provision the Company authorizes said accountants to discuss the affairs, finances and accounts of the Company and its Subsidiaries), all at such times and as often as may be requested.

**Section 7.4. Electronic Delivery**. Financial statements, opinions of independent certified public accountants, other information and Officer's Certificates that are required to be delivered

by the Company pursuant to Sections 7.1(a), (b) or (c) and Section 7.2 shall be deemed to have been delivered if the Company satisfies any of the following requirements with respect thereto:

(a) such financial statements satisfying the requirements of Section 7.1(a) or (b) and related Officer's Certificate satisfying the requirements of Section 7.2 and any other information required under Section 7.1(c) are delivered to each Purchaser or holder of a Note by e-mail at the e-mail address set forth in such Purchaser's or holder's Purchaser Schedule or as communicated from time to time in a separate writing delivered to the Company;

(b) the Company shall have timely filed such Form 10–Q or Form 10–K, satisfying the requirements of Section 7.1(a) or Section 7.1(b), as the case may be, with the SEC on EDGAR and shall have made such form and the related Officer's Certificate satisfying the requirements of Section 7.2 available on its home page on the internet, which is located at https://www.pnm.com as of the date of this Agreement;

(c) such financial statements satisfying the requirements of Section 7.1(a) or Section 7.1(b) and related Officer's Certificate(s) satisfying the requirements of Section 7.2 and any other information required under Section 7.1(c) are timely posted by or on behalf of the Company on IntraLinks or on any other similar website to which each Purchaser and holder of Notes has free access; or

(d) the Company shall have timely filed any of the items referred to in Section 7.1(c) with the SEC on EDGAR and shall have made such items available on its home page on the internet or on IntraLinks or on any other similar website to which each Purchaser and each holder of Notes has free access;

*provided*, *however,* that in no case shall access to such financial statements, other information and Officer's Certificates be conditioned upon any waiver or other agreement or consent (other than confidentiality provisions consistent with Section 20 of this Agreement); *provided*, *further*, that in the case of any of clauses (b), (c) or (d), the Company shall have given each Purchaser and each holder of a Note prior written notice, which may be by e-mail or in accordance with Section 18, of such posting or filing in connection with each delivery, *provided*, *further,* that upon request of any Purchaser or any holder to receive paper copies of such forms, financial statements, other information and Officer's Certificates or to receive them by e-mail, the Company will promptly e-mail them or deliver such paper copies, as the case may be, to such Purchaser or such holder.

**SECTION 8. PAYMENT AND PREPAYMENT OF THE NOTES**.

**Section 8.1. Maturity**. As provided therein, the entire unpaid principal balance of each Note shall be due and payable on the Maturity Date thereof.

**Section 8.2. Optional Prepayments with Make-Whole Amount**. (a) The Company may, at its option, upon notice as provided below, prepay at any time all, or from time to time any part of, the Notes of any Series, in an amount not less than 20% of the aggregate principal amount of the Notes of any Series to be prepaid then outstanding in the case of a partial prepayment, at

100% of the principal amount so prepaid, and the Make-Whole Amount determined for the prepayment date with respect to such principal amount. The Company will give each holder of Notes written notice of each optional prepayment under this Section 8.2 not less than ten (10) days and not more than sixty (60) days prior to the date fixed for such prepayment unless the Company and the Required Holders agree to another time period pursuant to Section 17. Each such notice shall specify such date (which shall be a Business Day), the aggregate principal amount of the Notes of each Series to be prepaid on such date, the principal amount of each Note of each Series held by such holder to be prepaid (determined in accordance with Section 8.3), and the interest to be paid on the prepayment date with respect to such principal amount being prepaid, and shall be accompanied by a certificate of a Senior Financial Officer as to the estimated Make-Whole Amount due with respect to each Series of Notes to be prepaid in connection with such prepayment (calculated as if the date of such notice were the date of the prepayment), setting forth the details of such computation. Two (2) Business Days prior to such prepayment, the Company shall deliver to each holder of Notes a certificate of a Senior Financial Officer specifying the calculation of such Make-Whole Amount as of the specified prepayment date.

(b) Notwithstanding anything contained in this Section 8.2 to the contrary, if and so long as any Default or Event of Default shall have occurred and be continuing, any prepayment of the Notes pursuant to the provisions of Section 8.2(a) shall be allocated among all of the Notes of all Series at the time outstanding in proportion, as nearly as practicable, to the respective unpaid principal amounts thereof.

**Section 8.3. Allocation of Partial Prepayments**. In the case of each partial prepayment of the Notes pursuant to Section 8.2, the principal amount of the Notes of the Series to be prepaid shall be allocated among all of the Notes of such Series at the time outstanding in proportion, as nearly as practicable, to the respective unpaid principal amounts thereof not theretofore called for prepayment.

**Section 8.4. Maturity; Surrender, Etc**. In the case of each prepayment of Notes pursuant to this Section 8, the principal amount of each Note to be prepaid shall mature and become due and payable on the date fixed for such prepayment, together with interest on such principal amount accrued to such date and the applicable Make-Whole Amount, if any. From and after such date, unless the Company shall fail to pay such principal amount when so due and payable, together with the interest and Make-Whole Amount, if any, as aforesaid, interest on such principal amount shall cease to accrue. Any Note paid or prepaid in full shall be surrendered to the Company and cancelled and shall not be reissued, and no Note shall be issued in lieu of any prepaid principal amount of any Note.

**Section 8.5. Purchase of Notes**. The Company will not and will not permit any Affiliate to purchase, redeem, prepay or otherwise acquire, directly or indirectly, any of the outstanding Notes of any Series except (a) upon the payment or prepayment of the Notes of any Series in accordance with this Agreement and the Notes or (b) pursuant to an offer to purchase made by the Company or an Affiliate pro rata to the holders of all Notes of any Series at the time outstanding upon the same terms and conditions, *provided* that if and so long as any Default or Event of Default exists, such written offer shall be made pro rata to the holders of all Notes of all Series outstanding upon the same terms and conditions. Any such offer shall provide each holder with sufficient

information to enable it to make an informed decision with respect to such offer, and shall remain open for at least five (5) Business Days. If the holders of more than 20% of the principal amount of the Notes of the applicable Series then outstanding accept such offer, the Company shall promptly notify the remaining holders of such Series of Notes of such fact and the expiration date for the acceptance by holders of such Series of Notes of such offer shall be extended by the number of days necessary to give each such remaining holder at least ten (10) Business Days from its receipt of such notice to accept such offer. The Company will promptly cancel all Notes acquired by it or any Affiliate pursuant to any payment or prepayment of Notes pursuant to this Agreement and no Notes may be issued in substitution or exchange for any such Notes.

**Section 8.6. Make-Whole Amount**.

The term **"Make-Whole Amount"** means, with respect to any Note, an amount equal to the excess, if any, of the Discounted Value of the Remaining Scheduled Payments with respect to the Called Principal of such Note over the amount of such Called Principal, *provided* that the Make-Whole Amount may in no event be less than zero; *provided further* that the Make-Whole Amount shall equal zero with respect to the relevant Series of Notes if such prepayment occurs (i) on or after the date which is July 1, 2031 in the case of the Series C Notes and (ii) on or after the date which is May 1, 2036 in the case of the Series D Notes. For the purposes of determining the Make-Whole Amount, the following terms have the following meanings:

**"Called Principal"** means, with respect to any Note, the principal of such Note that is to be prepaid pursuant to Section 8.2 or has become or is declared to be immediately due and payable pursuant to Section 12.1, as the context requires.

**"Discounted Value"** means, with respect to the Called Principal of any Note, the amount obtained by discounting all Remaining Scheduled Payments with respect to such Called Principal from their respective scheduled due dates to the Settlement Date with respect to such Called Principal, in accordance with accepted financial practice and at a discount factor (applied on the same periodic basis as that on which interest on the Notes is payable) equal to the Reinvestment Yield with respect to such Called Principal.

**"Reinvestment Yield"** means, with respect to the Called Principal of any Note, the sum of (a) 0.50% plus (b) the yield to maturity implied by the "Ask Yield(s)" reported as of 10:00 a.m. (New York City time) on the second Business Day preceding the Settlement Date with respect to such Called Principal, on the display designated as "Page PX1" (or such other display as may replace Page PX1) on Bloomberg Financial Markets for the most recently issued actively traded on-the-run U.S. Treasury securities (**"Reported"**) having a maturity equal to the Remaining Average Life of such Called Principal as of such Settlement Date. If there are no such U.S. Treasury securities Reported having a maturity equal to such Remaining Average Life, then such implied yield to maturity will be determined by (i) converting U.S. Treasury bill quotations to bond equivalent yields in accordance with accepted financial practice and (ii) interpolating linearly between the "Ask Yields" Reported for the applicable most recently issued actively traded on-the-run U.S. Treasury securities with the maturities (1) closest to and greater than such Remaining Average Life and (2) closest to and less than such Remaining Average Life. The

Reinvestment Yield shall be rounded to the number of decimal places as appears in the interest rate of the applicable Note.

If such yields are not Reported or the yields Reported as of such time are not ascertainable (including by way of interpolation), then **"Reinvestment Yield"** means, with respect to the Called Principal of any Note, the sum of (x) 0.50% plus (y) the yield to maturity implied by the U.S. Treasury constant maturity yields reported, for the latest day for which such yields have been so reported as of the second Business Day preceding the Settlement Date with respect to such Called Principal, in Federal Reserve Statistical Release H.15 (or any comparable successor publication) for the U.S. Treasury constant maturity having a term equal to the Remaining Average Life of such Called Principal as of such Settlement Date. If there is no such U.S. Treasury constant maturity having a term equal to such Remaining Average Life, such implied yield to maturity will be determined by interpolating linearly between (1) the U.S. Treasury constant maturity so reported with the term closest to and greater than such Remaining Average Life and (2) the U.S. Treasury constant maturity so reported with the term closest to and less than such Remaining Average Life. The Reinvestment Yield shall be rounded to the number of decimal places as appears in the interest rate of the applicable Note.

**"Remaining Average Life"** means, with respect to any Called Principal, the number of years obtained by dividing (i) such Called Principal into (ii) the sum of the products obtained by multiplying (a) the principal component of each Remaining Scheduled Payment with respect to such Called Principal by (b) the number of years, computed on the basis of a 360-day year comprised of twelve 30-day months and calculated to two decimal places, that will elapse between the Settlement Date with respect to such Called Principal and the scheduled due date of such Remaining Scheduled Payment.

**"Remaining Scheduled Payments"** means, with respect to the Called Principal of any Note, all payments of such Called Principal and interest thereon that would be due after the Settlement Date with respect to such Called Principal if no payment of such Called Principal were made prior to its scheduled due date, *provided* that if such Settlement Date is not a date on which interest payments are due to be made under the Notes, then the amount of the next succeeding scheduled interest payment will be reduced by the amount of interest accrued to such Settlement Date and required to be paid on such Settlement Date pursuant to Section 8.2 or Section 12.1.

**"Settlement Date"** means, with respect to the Called Principal of any Note, the date on which such Called Principal is to be prepaid pursuant to Section 8.2 or has become or is declared to be immediately due and payable pursuant to Section 12.1, as the context requires.

**Section 8.7. Change of Control**.

(a) *Notice of Change of Control*. The Company will, within fifteen (15) Business Days after the occurrence of any Change of Control, give written notice (the **"Change of Control Notice"**) of such Change of Control to each holder of Notes. Such Change of Control Notice shall contain and constitute an offer to prepay the Notes as described in Section 8.7(b) hereof and shall be accompanied by the certificate described in Section 8.7(e).

(b) *Offer to Prepay Notes*. The offer to prepay Notes contemplated by Section 8.7(a) shall be an offer to prepay, in accordance with and subject to this Section 8.7, all, but not less than all, of the Notes held by each holder (in this case only, "holder" in respect of any Note registered in the name of a nominee for a disclosed beneficial owner shall mean such beneficial owner) on a date specified in such Change of Control Notice (the **"Proposed Prepayment Date"**). Such date shall be not fewer than thirty (30) days and not more than sixty (60) days after the date of delivery of the Change of Control Notice.

(c) *Acceptance*. Any holder of Notes may accept the offer to prepay made pursuant to this Section 8.7 by causing a notice of such acceptance to be delivered to the Company not fewer than ten (10) days prior to the Proposed Prepayment Date. A failure by a holder of Notes to respond to an offer to prepay made pursuant to this Section 8.7 shall be deemed to constitute a rejection of such offer by such holder.

(d) *Prepayment*. Prepayment of the Notes to be prepaid pursuant to this Section 8.7 shall be at 100% of the principal amount of such Notes together with accrued and unpaid interest thereon but without any Make-Whole Amount or other premium. The prepayment shall be made on the Proposed Prepayment Date.

(e) *Officer's Certificate*. Each offer to prepay the Notes pursuant to this Section 8.7 shall be accompanied by a certificate, executed by a Senior Financial Officer and dated the date of delivery of the Change of Control Notice, specifying: (i) the Proposed Prepayment Date; (ii) that such offer is made pursuant to this Section 8.7; (iii) the principal amount of each Note offered to be prepaid (which shall be 100% of the outstanding principal balance of each such Note); (iv) the interest that would be due on each Note offered to be prepaid, accrued to the Proposed Prepayment Date; (v) that the conditions of this Section 8.7 required to be fulfilled prior to the giving of notice have been fulfilled; and (vi) in reasonable detail, the general nature and date of the Change of Control.

**Section 8.8. Payments Due on Non-Business Days**. Anything in this Agreement or the Notes to the contrary notwithstanding, (x) except as set forth in clause (y), any payment of interest on any Note that is due on a date that is not a Business Day shall be made on the next succeeding Business Day without including the additional days elapsed in the computation of the interest payable on such next succeeding Business Day; and (y) any payment of principal of or Make-Whole Amount on any Note (including principal due on the Maturity Date of such Note) that is due on a date that is not a Business Day shall be made on the next succeeding Business Day and shall include the additional days elapsed in the computation of interest payable on such next succeeding Business Day.

**SECTION 9. AFFIRMATIVE COVENANTS**.

From the Closing and thereafter, so long as any of the Notes are outstanding, the Company covenants that:

**Section 9.1. Compliance with Laws**. Without limiting Section 10.4, the Company will, and will cause each of its Subsidiaries to, comply with all laws, ordinances or governmental rules

or regulations to which each of them is subject (including ERISA, Environmental Laws, the USA PATRIOT Act and the other laws and regulations that are referred to in Section 5.16) and will obtain and maintain in effect all licenses, certificates, permits, franchises and other governmental authorizations necessary to the ownership of their respective properties or to the conduct of their respective businesses, in each case to the extent necessary to ensure that non-compliance with such laws, ordinances or governmental rules or regulations or failures to obtain or maintain in effect such licenses, certificates, permits, franchises and other governmental authorizations would not, individually or in the aggregate, reasonably be expected to have a Material Adverse Effect.

**Section 9.2. Insurance**. The Company will, and will cause each of its Subsidiaries to, maintain, with financially sound and reputable insurers, insurance with respect to their respective properties and businesses against such casualties and contingencies, of such types, on such terms and in such amounts (including deductibles, co-insurance and self-insurance, if adequate reserves are maintained with respect thereto) as is customary in the case of entities of established reputations engaged in the same or a similar business and similarly situated.

**Section 9.3. Maintenance of Properties**. The Company will, and will cause each of its Subsidiaries to, maintain and keep, or cause to be maintained and kept, their respective properties in good working order and condition (other than ordinary wear and tear), so that the business carried on in connection therewith may be properly conducted at all times, *provided* that this Section 9.3 shall not prevent the Company or any Subsidiary from discontinuing the operation and the maintenance of any of its properties if such discontinuance is desirable in the conduct of its business and the Company has concluded that such discontinuance would not, individually or in the aggregate, reasonably be expected to have a Material Adverse Effect; and *provided*, *further*, that this provision shall not apply to properties required to be closed, discontinued or abandoned pursuant to a law, legal order, mandate or requirement from the NMPRC or any other federal or state governmental authority or regulatory authority with the authority to regulate or oversee any aspect of the business of the Company or its Affiliates.

**Section 9.4. Payment of Taxes and Claims**. The Company will, and will cause each of its Subsidiaries to, file all tax returns required to be filed in any jurisdiction and to pay and discharge all taxes shown to be due and payable on such returns and all other taxes, assessments, governmental charges, levies or claims payable by any of them, to the extent the same have become due and payable and before they have become delinquent, *provided* that neither the Company nor any Subsidiary need pay any such tax, assessment, charge, levy or claim if (i) the amount, applicability or validity thereof is contested by the Company or such Subsidiary on a timely basis in good faith and in appropriate proceedings, and the Company or a Subsidiary has established adequate reserves therefor in accordance with GAAP on the books of the Company or such Subsidiary or (ii) the nonpayment of all such taxes, assessments, charges, levies and claims would not, individually or in the aggregate, reasonably be expected to have a Material Adverse Effect.

**Section 9.5. Corporate Existence, Etc**. Subject to Section 10.2, the Company will at all times preserve and keep its existence in full force and effect. Subject to Sections 10.2 and 10.3, the Company will at all times preserve and keep in full force and effect the corporate existence of each of its Subsidiaries (unless dissolved or merged into the Company or a Wholly-Owned Subsidiary) and all Material rights and franchises of the Company and its Subsidiaries unless, in

the good faith judgment of the Company, the termination of or failure to preserve and keep in full force and effect such corporate existence, right or franchise would not, individually or in the aggregate, have a Material Adverse Effect.

**Section 9.6. Books and Records**. The Company will, and will cause each of its Subsidiaries to, maintain proper books of record and account in conformity with GAAP and all applicable requirements of any Governmental Authority having legal or regulatory jurisdiction over the Company or such Subsidiary, as the case may be. The Company will, and will cause each of its Subsidiaries to, keep books, records and accounts which, in reasonable detail, accurately reflect all transactions and dispositions of assets. The Company and its Subsidiaries have devised a system of internal accounting controls sufficient to provide reasonable assurances that their respective books, records, and accounts accurately reflect all transactions and dispositions of assets and the Company will, and will cause each of its Subsidiaries to, continue to maintain such system.

**Section 9.7. Guarantors**. (a) The Company will (x) cause each of its Subsidiaries that guarantees or otherwise becomes liable at any time, whether as a borrower or an additional or co-borrower or otherwise, for or in respect of any Indebtedness under any Material Credit Facility (a "**Subsidiary Guarantor**") and (y) use commercially reasonable efforts to cause any other entity that is not a Subsidiary that guarantees or otherwise becomes liable at any time, whether as a borrower or an additional or co-borrower or otherwise, for or in respect of any Indebtedness under a Material Credit Facility (a **"Non-Subsidiary Guarantor"**; together with any other Non-Subsidiary Guarantors and any Subsidiary Guarantors, each a **"Guarantor**") to concurrently therewith (or, if prior to the Closing, at Closing):

(i) enter into an agreement in form and substance satisfactory to the Required Holders providing for the guaranty by such Guarantor, on a joint and several basis with all other such Guarantors, of (x) the prompt payment in full when due of all amounts payable by the Company pursuant to the Notes (whether for principal, interest, Make-Whole Amount or otherwise) and this Agreement, including all indemnities, fees and expenses payable by the Company thereunder and (y) the prompt, full and faithful performance, observance and discharge by the Company of each and every covenant, agreement, undertaking and provision required pursuant to the Notes or this Agreement to be performed, observed or discharged by it (a **"NPA Guaranty"**); and

(ii) deliver the following to each Purchaser and holder of a Note:

(A) an executed counterpart of such NPA Guaranty;

(B) a certificate signed by an authorized responsible officer of such Guarantor containing representations and warranties on behalf of such Guarantor to the same effect, *mutatis mutandis*, as those contained in Sections 5.1, 5.2, 5.6, 5.7 and 5.16 of this Agreement (but with respect to such Guarantor and such NPA Guaranty rather than the Company);

(C) all documents as may be reasonably requested by the Required Holders to evidence the due organization, continuing existence and, where

applicable, good standing of such Guarantor and the due authorization by all requisite action on the part of such Guarantor of the execution and delivery of such NPA Guaranty and the performance by such Guarantor of its obligations thereunder; and

(D) an opinion of counsel reasonably satisfactory to the Required Holders covering such matters relating to such Guarantor and such NPA Guaranty as the Required Holders may reasonably request.

(b) At the election of the Company and by written notice to each holder of Notes, any Guarantor may be discharged from all of its obligations and liabilities under its NPA Guaranty and shall be automatically released from its obligations thereunder without the need for the execution or delivery of any other document by the holders, *provided* that (i) if such Guarantor is a guarantor or is otherwise liable for or in respect of any Material Credit Facility, then such Guarantor has been released and discharged (or will be released and discharged concurrently with the release of such Guarantor under its NPA Guaranty) under such Material Credit Facility, (ii) at the time of, and after giving effect to, such release and discharge, no Default or Event of Default shall be existing, (iii) no amount is then due and payable under such NPA Guaranty, (iv) if in connection with such Guarantor being released and discharged under any Material Credit Facility, any fee or other form of consideration is given to any holder of Indebtedness under such Material Credit Facility for such release, the holders of the Notes shall receive equivalent consideration substantially concurrently therewith and (v) each holder shall have received a certificate of a Responsible Officer certifying as to the matters set forth in clauses (i) through (iv).

(c) The failure of a Non-Subsidiary Guarantor to comply with Section 9.7(a)(i) or (ii) will constitute non-compliance by a Guarantor with this Section 9.7.

**Section 9.8. Most Favored Lender**. (a) If at any time after the date of this Agreement the Company amends or modifies any financial covenant or any event of default in the nature of a financial covenant (or the related definitions or provisions governing accounting terms) (each, a **"Financial Covenant"**) in any Material Credit Facility that is similar to any Financial Covenant now or hereafter included herein, or if a Financial Covenant is added to such Material Credit Facility (any such amended, modified or added Financial Covenant, a **"Modified Covenant"**), then the Company shall provide a Most Favored Lender Notice to each holder (or if prior to Closing, to the Purchasers) of the Notes, and such Financial Covenant herein shall be deemed to be amended, modified or added automatically without any further action on the part of the Company or any holder; *provided* that if such Modified Covenant is less restrictive on the Company, then the amendment, modification or addition to this Agreement shall take effect fifteen (15) days after receipt of such Most Favored Lender Notice, unless the Required Holders notify the Company of their objection to such amendment, modification or addition within such fifteen (15) day period, in which case such amendment, modification or addition to this Agreement will not take effect; *provided further* that, notwithstanding the foregoing, no such amendment, modification or addition shall increase the ratio contained in Section 10.7 in excess of 0.65 to 1.00 (whether by amending the ratio, the related definitions or provisions governing accounting terms) without the consent of the Required Holders.

(b) Notwithstanding the foregoing, if a Default or an Event of Default then exists and the amendment, modification or addition of any Financial Covenant herein would make such provision less restrictive on the Company, then such Financial Covenant shall only be deemed automatically amended, modified or added at such time when such Default or Event of Default no longer exists, if such time should occur. Furthermore, if any fee or other consideration shall be given to the lenders under such Material Credit Facility in connection with a Modified Covenant, the equivalent of such fee or other consideration shall be given, pro rata, to the holders of the Notes; *provided* that no fee or other consideration shall be due if the Modified Covenant is made in connection with a renewal, restatement or extension of or entry into such Material Credit Facility.

(c) **"Most Favored Lender Notice"** means, in respect of any Modified Covenant, a written notice to each of the holders of the Notes delivered promptly, and in any event within twenty (20) Business Days after the inclusion of such Modified Covenant in any Material Credit Facility (including by way of amendment or other modification of any existing provision thereof) from a Responsible Officer referring to the provisions of this Section 9.8 and setting forth a reasonably detailed description of such Modified Covenant (including any defined terms used therein) and related explanatory calculations, as applicable.

**SECTION 10. NEGATIVE COVENANTS**.

From the Closing and thereafter, so long as any of the Notes are outstanding, the Company covenants that:

**Section 10.1. Transactions with Affiliates**. The Company will not, and will not permit any Subsidiary to, enter into directly or indirectly any Material transaction or Material group of related transactions (including the purchase, lease, sale or exchange of properties of any kind or the rendering of any service) with any Affiliate (other than the Company or another Subsidiary), except pursuant to the reasonable requirements of the Company's or such Subsidiary's business and upon fair and reasonable terms no less favorable to the Company or such Subsidiary than would be obtainable in a comparable arm's-length transaction with a Person not an Affiliate.

**Section 10.2. Consolidation and Merger**. The Company will not (a) enter into any transaction of merger or (b) consolidate, liquidate, wind up or dissolve itself (or suffer any liquidation or dissolution); *provided* that, so long as no Default or Event of Default shall exist or be caused thereby, a Person may be merged or consolidated with or into the Company so long as the Company shall be the continuing or surviving Person.

**Section 10.3. Sale or Lease of Assets**. The Company will not (nor will it permit its Subsidiaries to) sell, lease, transfer or otherwise dispose of, any of its assets (including all or substantially all of its assets, whether in one transaction or a series of related transactions) except (a) sales or transfers of accounts receivable and related rights to payment in connection with a State Approved Securitization and other sales and transfers of accounts receivable and related rights to payment so long as such other sales and transfers are non-recourse to the Company (other than with respect to Standard Securitization Undertakings) and are otherwise on commercially reasonable terms, (b) sales of assets (excluding those permitted in clause (a) hereof) for fair value,

if the aggregate value of all such transactions in any calendar year, does not exceed 25% of the book value of Total Assets, as calculated as of the end of the most recent Fiscal Quarter and (c) the sale, lease, transfer or other disposition, at less than fair value, of any other assets, *provided* that the aggregate book value of such assets shall not exceed $20,000,000 in any calendar year.

**Section 10.4. Line of Business**. The Company will not and will not permit any Subsidiary to engage in any business if, as a result, the general nature of the business in which the Company and its Subsidiaries, taken as a whole, would then be engaged would be substantially changed from the general nature of the business in which the Company and its Subsidiaries, taken as a whole, are engaged on the date of this Agreement as described in the Company's Annual Report on Form 10-K for the year ended December 31, 2024.

**Section 10.5. Economic Sanctions, Etc**. The Company will not, and will not permit any Controlled Entity to (a) become (including by virtue of being owned or controlled by a Blocked Person), own or control a Blocked Person or (b) directly or knowingly indirectly have any investment in or engage in any dealing or transaction (including any investment, dealing or transaction involving the proceeds of the Notes) with any Person if such investment, dealing or transaction (i) would cause any holder or any affiliate of such holder to be in violation of any law or regulation applicable to such holder or (ii) is prohibited by any U.S. Economic Sanctions Laws.

**Section 10.6. Liens**. The Company will not (nor will it permit its Subsidiaries to) contract, create, incur, assume or permit to exist any Lien with respect to any of its property or assets of any kind (whether real or personal, tangible or intangible), whether now owned or hereafter acquired, securing any Indebtedness other than the following:

(a) Liens securing the Notes;

(b) Liens for taxes not yet due or Liens for taxes being contested in good faith by appropriate proceedings for which adequate reserves determined in accordance with GAAP have been established (and as to which the property subject to any such Lien is not yet subject to foreclosure, sale or loss on account thereof);

(c) Liens in respect of property imposed by law arising in the ordinary course of business such as materialmen's, mechanics', warehousemen's, carrier's, landlords' and other nonconsensual statutory Liens which are not yet due and payable, which have been in existence less than ninety (90) days or which are being contested in good faith by appropriate proceedings for which adequate reserves determined in accordance with GAAP have been established (and as to which the property subject to any such Lien is not yet subject to foreclosure, sale or loss on account thereof);

(d) pledges or deposits made in the ordinary course of business to secure payment of worker's compensation insurance, unemployment insurance, pensions or social security programs;

(e) Liens arising from good faith deposits in connection with or to secure performance of tenders, bids, leases, government contracts, performance and

return-of-money bonds and other similar obligations incurred in the ordinary course of business (other than obligations in respect of the payment of borrowed money);

(f) Liens arising from good faith deposits in connection with or to secure performance of statutory obligations and surety and appeal bonds;

(g) easements, rights-of-way, restrictions (including zoning restrictions), minor defects or irregularities in title and other similar charges or encumbrances not, in any material respect, impairing the use of the encumbered property for its intended purposes;

(h) judgment Liens that would not constitute an Event of Default;

(i) Liens arising by virtue of any statutory or common law provision relating to banker's liens, rights of setoff or similar rights as to deposit accounts or other funds maintained with a creditor depository institution;

(j) any Lien created or arising over any property which is acquired, constructed or created by the Company or its Subsidiaries, but only if (i) such Lien secures only principal amounts (not exceeding the cost of such acquisition, construction or creation) raised for the purposes of such acquisition, construction or creation, together with any costs, expenses, interest and fees incurred in relation thereto or a guarantee given in respect thereof, (ii) such Lien is created or arises on or before one hundred eighty (180) days after the completion of such acquisition, construction or creation, (iii) such Lien is confined solely to the property so acquired, constructed or created and any improvements thereto and (iv) the aggregate principal amount of all Indebtedness secured by such Liens shall not exceed $50,000,000 at any one time outstanding;

(k) any Lien on Margin Stock;

(l) the assignment of, or Liens on, accounts receivable and related rights to payment in connection with (i) a State Approved Securitization or (ii) any other accounts receivable securitization so long as such other securitization is non-recourse to the Company (other than with respect to Standard Securitization Undertakings) and is otherwise on commercially reasonable terms, and the filing of related financing statements under the Uniform Commercial Code of the applicable jurisdictions;

(m) the assignment of, or Liens on, demand, energy or wheeling revenues, or on capacity reservation or option fees, payable to the Company with respect to any wholesale electric service or transmission agreements, the assignment of, or Liens on, revenues from energy services contracts, and the assignment of, or Liens on, capacity reservation or option fees payable to the Company with respect to asset sales permitted herein;

(n) any extension, renewal or replacement (or successive extensions, renewals or replacements), as a whole or in part, of any Liens referred to in the foregoing clauses (a) through (m), for amounts not exceeding the principal amount of the Indebtedness secured by the Lien so extended, renewed or replaced, *provided* that such extension, renewal or

replacement Lien is limited to all or a part of the same property or assets that were covered by the Lien extended, renewed or replaced (plus improvements on such property or assets);

(o) Liens on Property that is subject to a lease that is classified as an operating lease as of the date of the Closing but which is subsequently converted into a capital lease;

(p) Liens securing obligations under Hedging Agreements entered into in the ordinary course of business and not for speculative purposes;

(q) Liens granted by bankruptcy remote special purpose Subsidiaries to secure stranded cost securitization bonds in connection with the San Juan Generating Station or any other energy-generating facility or property of the Company; and

(r) Liens on Property, in addition to those otherwise permitted by clauses (a) through (q) above, securing, directly or indirectly, Indebtedness or obligations arising pursuant to other agreements entered into in the ordinary course of business which do not exceed, in the aggregate at any one time outstanding, $50,000,000; *provided* that the Company and its Subsidiaries shall not secure pursuant to this Section 10.6(r) any Indebtedness outstanding under any Material Credit Facility unless and until the Notes (and any guaranty delivered in connection therewith) shall concurrently be secured equally and ratably with such Indebtedness pursuant to documentation reasonably acceptable to the Required Holders in substance and in form.

**Section 10.7. Financial Covenant.** The Company shall not permit the ratio of (a) Consolidated Indebtedness to (b) Consolidated Capitalization to be greater than 0.65 to 1.0 as of the last day of any Fiscal Quarter.

**SECTION 11. EVENTS OF DEFAULT**.

An **"Event of Default"** shall exist if any of the following conditions or events shall occur and be continuing:

(a) the Company defaults in the payment of any principal or Make-Whole Amount, if any, on any Note when the same becomes due and payable, whether at maturity or at a date fixed for prepayment or by declaration or otherwise; or

(b) the Company defaults in the payment of any interest on any Note for more than five (5) Business Days after the same becomes due and payable; or

(c) the Company defaults in the performance of or compliance with any term contained in Section 7.1(d), Section 9.5 or Section 10; or

(d) the Company or any Guarantor defaults in the performance of or compliance with any term contained herein (other than those referred to in Sections 11(a), (b) and (c)) or in any NPA Guaranty and such default is not remedied within thirty (30) days after the earlier of (i) a Responsible Officer obtaining actual knowledge of such default and (ii) the

Company receiving written notice of such default from any holder of a Note (any such written notice to be identified as a "notice of default" and to refer specifically to this Section 11(d)); or

(e) (i) any representation or warranty made in writing by or on behalf of the Company or by any officer of the Company in this Agreement or any writing furnished in connection with the transactions contemplated hereby proves to have been false or incorrect in any material respect on the date as of which made, or (ii) any representation or warranty made in writing by or on behalf of any Guarantor or by any officer of such Guarantor in any NPA Guaranty or any writing furnished in connection with such NPA Guaranty proves to have been false or incorrect in any material respect on the date as of which made; or

(f) (i) the Company or any Significant Subsidiary is in default (as principal or as guarantor or other surety) in the payment of any principal of or premium or make-whole amount or interest on any Indebtedness that is outstanding in an aggregate principal amount of at least $40,000,000 (or its equivalent in the relevant currency of payment) beyond any period of grace provided with respect thereto, or (ii) the Company or any Significant Subsidiary is in default in the performance of or compliance with any term of any evidence of any Indebtedness in an aggregate outstanding principal amount of at least $40,000,000 (or its equivalent in the relevant currency of payment) or of any mortgage, indenture or other agreement relating thereto or any other condition exists, and as a consequence of such default or condition such Indebtedness has become, or has been declared (or one or more Persons are entitled to declare such Indebtedness to be), due and payable before its stated maturity or before its regularly scheduled dates of payment, or (iii) as a consequence of the occurrence or continuation of any event or condition (other than the passage of time or the right of the holder of Indebtedness to convert such Indebtedness into equity interests), (x) the Company or any Significant Subsidiary has become obligated to purchase or repay Indebtedness before its regular maturity or before its regularly scheduled dates of payment in an aggregate outstanding principal amount of at least $40,000,000 (or its equivalent in the relevant currency of payment), or (y) one or more Persons have the right to require the Company or any Significant Subsidiary so to purchase or repay such Indebtedness in an amount of at least $40,000,000; or

(g) the Company or any Significant Subsidiary (i) admits in writing its inability to pay, its debts as they become due, (ii) files, or consents by answer or otherwise to the filing against it of, a petition for relief or reorganization or arrangement or any other petition in bankruptcy, for liquidation or to take advantage of any bankruptcy, insolvency, reorganization, moratorium or other similar law of any jurisdiction, (iii) makes an assignment for the benefit of its creditors, (iv) consents to the appointment of a custodian, receiver, trustee or other officer with similar powers with respect to it or with respect to any substantial part of its property, (v) is adjudicated as insolvent or to be liquidated, or (vi) takes corporate action for the purpose of any of the foregoing; or

(h) a court or other Governmental Authority of competent jurisdiction enters an order appointing, without consent by the Company or any of its Significant Subsidiaries, a

custodian, receiver, trustee or other officer with similar powers with respect to it or with respect to any substantial part of its property, or constituting an order for relief or approving a petition for relief or reorganization or any other petition in bankruptcy or for liquidation or to take advantage of any bankruptcy or insolvency law of any jurisdiction, or ordering the dissolution, winding-up or liquidation of the Company or any of its Significant Subsidiaries, or any such petition shall be filed against the Company or any of its Significant Subsidiaries and such petition shall not be dismissed within sixty (60) days; or

(i) any event occurs with respect to the Company or any Significant Subsidiary which under the laws of any jurisdiction is analogous to any of the events described in Section 11(g) or Section 11(h), *provided* that the applicable grace period, if any, which shall apply shall be the one applicable to the relevant proceeding which most closely corresponds to the proceeding described in Section 11(g) or Section 11(h); or

(j) any final judgment or order for the payment of money aggregating in excess of $40,000,000 or one or more such judgments or orders in excess of $80,000,000 in the aggregate (or its equivalent in the relevant currency of payment), including any such final order enforcing a binding arbitration decision, are rendered against one or more of the Company and its Significant Subsidiaries and which judgments are not, within sixty (60) days after entry thereof, bonded, discharged or stayed pending appeal, or are not discharged within sixty (60) days after the expiration of such stay; or

(k) if (i) any Plan shall fail to satisfy the minimum funding standards of ERISA or the Code for any plan year or part thereof or a waiver of such standards or extension of any amortization period is sought or granted under section 412 of the Code, (ii) a notice of intent to terminate any Plan shall have been or is reasonably expected to be filed with the PBGC or the PBGC shall have instituted proceedings under ERISA section 4042 to terminate or appoint a trustee to administer any Plan or the PBGC shall have notified the Company or any ERISA Affiliate that a Plan may become a subject of any such proceedings, (iii) there is any "amount of unfunded benefit liabilities" (within the meaning of section 4001(a)(18) of ERISA) under one or more Plans, determined in accordance with Title IV of ERISA, (iv) the aggregate present value of accrued benefit liabilities under all funded Non-U.S. Plans exceeds the aggregate current value of the assets of such Non-U.S. Plans allocable to such liabilities, (v) the Company or any ERISA Affiliate shall have incurred or is reasonably expected to incur any liability pursuant to Title I or IV of ERISA or the penalty or excise tax provisions of the Code relating to employee benefit plans, (vi) the Company or any ERISA Affiliate withdraws from any Multiemployer Plan, (vii) the Company or any Subsidiary establishes or amends any employee welfare benefit plan that provides post-employment welfare benefits in a manner that would increase the liability of the Company or any Subsidiary thereunder, (viii) the Company or any Subsidiary fails to administer or maintain a Non-U.S. Plan in compliance with the requirements of any and all applicable laws, statutes, rules, regulations or court orders or any Non-U.S. Plan is involuntarily terminated or wound up, or (ix) the Company or any Subsidiary becomes subject to the imposition of a financial penalty (which for this purpose shall mean any tax, penalty or other liability, whether by way of indemnity or otherwise) with respect to one or more Non-U.S. Plans; and any such event or events described in

clauses (i) through (ix) above, either individually or together with any other such event or events, would reasonably be expected to have a Material Adverse Effect. As used in this Section 11(k), the terms **"employee benefit plan"** and **"employee welfare benefit plan"** shall have the respective meanings assigned to such terms in section 3 of ERISA; or

(l) any NPA Guaranty shall cease to be in full force and effect, any Guarantor or any Person acting on behalf of any Guarantor shall contest in any manner the validity, binding nature or enforceability of any NPA Guaranty, or the obligations of any Guarantor under any NPA Guaranty are not or cease to be legal, valid, binding and enforceable in accordance with the terms of such NPA Guaranty.

**SECTION 12. REMEDIES ON DEFAULT, ETC**.

**Section 12.1. Acceleration**. (a) If an Event of Default with respect to the Company described in Section 11(g), (h) or (i) (other than an Event of Default described in clause (i) of Section 11(g) or described in clause (vi) of Section 11(g) by virtue of the fact that such clause encompasses clause (i) of Section 11(g)) has occurred, all the Notes then outstanding shall automatically become immediately due and payable.

(b) If any other Event of Default has occurred and is continuing, the Required Holders may at any time at its or their option, by notice or notices to the Company, declare all the Notes then outstanding to be immediately due and payable.

(c) If any Event of Default described in Section 11(a) or (b) has occurred and is continuing, any holder or holders of Notes at the time outstanding affected by such Event of Default may at any time, at its or their option, by notice or notices to the Company, declare all the Notes held by it or them to be immediately due and payable.

Upon any Notes becoming due and payable under this Section 12.1, whether automatically or by declaration, such Notes will forthwith mature and the entire unpaid principal amount of such Notes, plus (x) all accrued and unpaid interest thereon (including interest accrued thereon at the Default Rate) and (y) the Make-Whole Amount determined in respect of such principal amount, shall all be immediately due and payable, in each and every case without presentment, demand, protest or further notice, all of which are hereby waived. The Company acknowledges, and the parties hereto agree, that each holder of a Note has the right to maintain its investment in the Notes free from repayment by the Company (except as herein specifically provided for) and that the provision for payment of a Make-Whole Amount by the Company in the event that the Notes are prepaid or are accelerated as a result of an Event of Default, is intended to provide compensation for the deprivation of such right under such circumstances.

**Section 12.2. Other Remedies**. If any Default or Event of Default has occurred and is continuing, and irrespective of whether any Notes have become or have been declared immediately due and payable under Section 12.1, the holder of any Note at the time outstanding may proceed to protect and enforce the rights of such holder by an action at law, suit in equity or other appropriate proceeding, whether for the specific performance of any agreement contained herein

or in any Note or NPA Guaranty, or for an injunction against a violation of any of the terms hereof or thereof, or in aid of the exercise of any power granted hereby or thereby or by law or otherwise.

**Section 12.3. Rescission**. At any time after any Notes have been declared due and payable pursuant to Section 12.1(b) or (c), the Required Holders, by written notice to the Company, may rescind and annul any such declaration and its consequences if (a) the Company has paid all overdue interest on the Notes, all principal of and Make-Whole Amount, if any, on any Notes that are due and payable and are unpaid other than by reason of such declaration, and all interest on such overdue principal and Make-Whole Amount, if any, and (to the extent permitted by applicable law) any overdue interest in respect of the Notes, at the Default Rate, (b) neither the Company nor any other Person shall have paid any amounts which have become due solely by reason of such declaration, (c) all Events of Default and Defaults, other than non-payment of amounts that have become due solely by reason of such declaration, have been cured or have been waived pursuant to Section 17, and (d) no judgment or decree has been entered for the payment of any monies due pursuant hereto or to the Notes. No rescission and annulment under this Section 12.3 will extend to or affect any subsequent Event of Default or Default or impair any right consequent thereon.

**Section 12.4. No Waivers or Election of Remedies, Expenses, Etc**. No course of dealing and no delay on the part of any holder of any Note in exercising any right, power or remedy shall operate as a waiver thereof or otherwise prejudice such holder's rights, powers or remedies. No right, power or remedy conferred by this Agreement, any NPA Guaranty or any Note upon any holder thereof shall be exclusive of any other right, power or remedy referred to herein or therein or now or hereafter available at law, in equity, by statute or otherwise. Without limiting the obligations of the Company under Section 15, the Company will pay to the holder of each Note on demand such further amount as shall be sufficient to cover all costs and expenses of such holder incurred in any enforcement or collection under this Section 12, including reasonable attorneys' fees, expenses and disbursements.

**SECTION 13. REGISTRATION; EXCHANGE; SUBSTITUTION OF NOTES**.

**Section 13.1. Registration of Notes**. The Company shall keep at its principal executive office a register for the registration and registration of transfers of Notes. The name and address of each holder of one or more Notes, each transfer thereof and the name and address of each transferee of one or more Notes shall be registered in such register. If any holder of one or more Notes is a nominee, then (a) the name and address of the beneficial owner of such Note or Notes shall also be registered in such register as an owner and holder thereof and (b) at any such beneficial owner's option, either such beneficial owner or its nominee may execute any amendment, waiver or consent pursuant to this Agreement. Prior to due presentment for registration of transfer, the Person in whose name any Note shall be registered shall be deemed and treated as the owner and holder thereof for all purposes hereof, and the Company shall not be affected by any notice or knowledge to the contrary. The Company shall give to any holder of a Note that is an Institutional Investor promptly upon request therefor, a complete and correct copy of the names and addresses of all registered holders of Notes.

**Section 13.2. Transfer and Exchange of Notes**. Upon surrender of any Note to the Company at the address and to the attention of the designated officer (all as specified in

Section 18(iii)), for registration of transfer or exchange (and in the case of a surrender for registration of transfer accompanied by a written instrument of transfer duly executed by the registered holder of such Note or such holder's attorney duly authorized in writing and accompanied by the relevant name, address and other information for notices of each transferee of such Note or part thereof), within ten (10) Business Days thereafter, the Company shall execute and deliver, at the Company's expense (except as provided below), one or more new Notes of the same series (as requested by the holder thereof) in exchange therefor, in an aggregate principal amount equal to the unpaid principal amount of the surrendered Note. Each such new Note shall be payable to such Person as such holder may request and shall be substantially in the form of Schedule 1-A or Schedule 1-B, as applicable. Each such new Note shall be dated and bear interest from the date to which interest shall have been paid on the surrendered Note or dated the date of the surrendered Note if no interest shall have been paid thereon. The Company may require payment of a sum sufficient to cover any stamp tax or governmental charge imposed in respect of any such transfer of Notes. Notes shall not be transferred in denominations of less than $100,000, *provided* that if necessary to enable the registration of transfer by a holder of its entire holding of Notes of a Series, one Note of such Series may be in a denomination of less than $100,000. Any transferee, by its acceptance of a Note registered in its name (or the name of its nominee), shall be deemed to have made the representation set forth in Section 6.2.

**Section 13.3. Replacement of Notes**. Upon receipt by the Company at the address and to the attention of the designated officer (all as specified in Section 18(iii)) of evidence reasonably satisfactory to it of the ownership of and the loss, theft, destruction or mutilation of any Note (which evidence shall be, in the case of an Institutional Investor, notice from such Institutional Investor of such ownership and such loss, theft, destruction or mutilation), and

(a) in the case of loss, theft or destruction, of indemnity reasonably satisfactory to it (*provided* that if the holder of such Note is, or is a nominee for, an original Purchaser or another holder of a Note with a minimum net worth of at least $50,000,000 or a Qualified Institutional Buyer, such Person's own unsecured agreement of indemnity shall be deemed to be satisfactory), or

(b) in the case of mutilation, upon surrender and cancellation thereof,

within ten (10) Business Days thereafter, the Company at its own expense shall execute and deliver, in lieu thereof, a new Note, dated and bearing interest from the date to which interest shall have been paid on such lost, stolen, destroyed or mutilated Note or dated the date of such lost, stolen, destroyed or mutilated Note if no interest shall have been paid thereon.

**SECTION 14. PAYMENTS ON NOTES**.

**Section 14.1. Place of Payment**. Subject to Section 14.2, payments of principal, Make-Whole Amount, if any, and interest becoming due and payable on the Notes shall be made in New York, New York at the principal office of Wells Fargo Bank, National Association in such jurisdiction. The Company may at any time, by notice to each holder of a Note, change the place of payment of the Notes so long as such place of payment shall be either the principal office of the Company in such jurisdiction or the principal office of a bank or trust company in such jurisdiction.

**Section 14.2. Payment by Wire Transfer**. So long as any Purchaser or its nominee shall be the holder of any Note, and notwithstanding anything contained in Section 14.1 or in such Note to the contrary, the Company will pay all sums becoming due on such Note for principal, Make-Whole Amount, if any, interest and all other amounts becoming due hereunder by the method and at the address specified for such purpose below such Purchaser's name in the Purchaser Schedule, or by such other method or at such other address as such Purchaser shall have from time to time specified to the Company in writing for such purpose, without the presentation or surrender of such Note or the making of any notation thereon, except that upon written request of the Company made concurrently with or reasonably promptly after payment or prepayment in full of any Note, such Purchaser shall surrender such Note for cancellation, reasonably promptly after any such request, to the Company at its principal executive office or at the place of payment most recently designated by the Company pursuant to Section 14.1. Prior to any sale or other disposition of any Note held by a Purchaser or its nominee, such Purchaser will, at its election, either endorse thereon the amount of principal paid thereon and the last date to which interest has been paid thereon or surrender such Note to the Company in exchange for a new Note or Notes pursuant to Section 13.2. The Company will afford the benefits of this Section 14.2 to any Institutional Investor that is the direct or indirect transferee of any Note purchased by a Purchaser under this Agreement and that has made the same agreement relating to such Note as the Purchasers have made in this Section 14.2.

**Section 14.3. FATCA Information**. By acceptance of any Note, the holder of such Note agrees that such holder will with reasonable promptness duly complete and deliver to the Company, or to such other Person as may be reasonably requested by the Company, from time to time (a) in the case of any such holder that is a United States Person, such holder's United States tax identification number or other Forms reasonably requested by the Company necessary to establish such holder's status as a United States Person under FATCA and as may otherwise be necessary for the Company to comply with its obligations under FATCA and (b) in the case of any such holder that is not a United States Person, such documentation prescribed by applicable law (including as prescribed by section 1471(b)(3)(C)(i) of the Code) and such additional documentation as may be necessary for the Company to comply with its obligations under FATCA and to determine that such holder has complied with such holder's obligations under FATCA or to determine the amount (if any) to deduct and withhold from any such payment made to such holder (and the Company agrees that under current FATCA regulations in place as of the date of this Agreement as originally executed, executed copies of IRS Form W-8BEN or IRS Form W-8BEN-E, as applicable, as well as a U.S. Tax Compliance Certificate substantially in the form of Schedule 14.3 attached hereto, in both cases completed and executed, shall satisfy this requirement). Nothing in this Section 14.3 shall require any holder to provide information that is confidential or proprietary to such holder unless the Company is required to obtain such information under FATCA and, in such event, the Company shall treat any such information it receives as confidential. Notwithstanding any other provision of this Agreement, the Company or its agent shall be entitled to make a deduction or withholding from any payment which it makes under this Agreement for or on account of any present or future taxes, duties or charges if and to the extent so required by any applicable law and any current or future regulations or agreements thereunder or official interpretations thereof or any law implementing an intergovernmental approach thereto or by virtue of the holder failing to satisfy any certification or other requirements in respect of the Notes, in which event the Company or its agent shall make such payment after

such withholding or deduction has been made and shall account to the relevant authorities for the amount so withheld or deducted and shall have no obligation to gross up any payment hereunder or pay any additional amount as a result of such withholding tax.

**SECTION 15. EXPENSES, ETC**.

**Section 15.1. Transaction Expenses**. Whether or not the transactions contemplated hereby are consummated, the Company will pay all costs and expenses (including reasonable attorneys' fees of a special counsel and, if reasonably required by the Required Holders, local or other counsel) incurred by the Purchasers and each other holder of a Note in connection with such transactions and in connection with any amendments, waivers or consents under or in respect of this Agreement, any NPA Guaranty or the Notes (whether or not such amendment, waiver or consent becomes effective), including: (a) the costs and expenses incurred in enforcing or defending (or determining whether or how to enforce or defend) any rights under this Agreement, any NPA Guaranty or the Notes or in responding to any subpoena or other legal process or informal investigative demand issued in connection with this Agreement, any NPA Guaranty or the Notes, or by reason of being a holder of any Note, (b) the costs and expenses, including financial advisors' fees, incurred in connection with the insolvency or bankruptcy of the Company or any Subsidiary or in connection with any work-out or restructuring of the transactions contemplated hereby and by the Notes and any NPA Guaranty and (c) the costs and expenses incurred in connection with the initial filing of this Agreement and all related documents and financial information with the SVO, *provided* that such costs and expenses under this clause (c) shall not exceed $5,000 per Series of Note. If required by the NAIC, the Company shall obtain and maintain at its own cost and expense a Legal Entity Identifier (LEI).

The Company will pay, and will save each Purchaser and each other holder of a Note harmless from, (i) all claims in respect of any fees, costs or expenses, if any, of brokers and finders (other than those, if any, retained by a Purchaser or other holder in connection with its purchase of the Notes), (ii) any and all wire transfer fees that any bank or other financial institution deducts from any payment under such Note to such holder or otherwise charges to a holder of a Note with respect to a payment under such Note and (iii) any judgment, liability, claim, order, decree, fine, penalty, cost, fee, expense (including reasonable attorneys' fees and expenses) or obligation resulting from the consummation of the transactions contemplated hereby, including the use of the proceeds of the Notes by the Company.

**Section 15.2. Certain Taxes**. The Company agrees to pay all stamp, documentary or similar taxes or fees which may be payable in respect of the execution and delivery or the enforcement of this Agreement or any NPA Guaranty or the execution and delivery (but not the transfer) or the enforcement of any of the Notes in the United States or any other jurisdiction where the Company or any Guarantor has assets or of any amendment of, or waiver or consent under or with respect to, this Agreement or any NPA Guaranty or of any of the Notes, and to pay any value added tax due and payable in respect of reimbursement of costs and expenses by the Company pursuant to this Section 15, and will save each holder of a Note to the extent permitted by applicable law harmless against any loss or liability resulting from nonpayment or delay in payment of any such tax or fee required to be paid by the Company hereunder.

**Section 15.3. Survival**. The obligations of the Company under this Section 15 will survive the payment or transfer of any Note, the enforcement, amendment or waiver of any provision of this Agreement, any NPA Guaranty or the Notes, and the termination of this Agreement.

**SECTION 16. SURVIVAL OF REPRESENTATIONS AND WARRANTIES; ENTIRE AGREEMENT**.

All representations and warranties contained herein shall survive the execution and delivery of this Agreement and the Notes, the purchase or transfer by any Purchaser of any Note or portion thereof or interest therein and the payment of any Note, and may be relied upon by any subsequent holder of a validly transferred Note, regardless of any investigation made at any time by or on behalf of such Purchaser or any other holder of a Note. All statements contained in any certificate or other instrument delivered by or on behalf of the Company pursuant to this Agreement shall be deemed representations and warranties of the Company under this Agreement. Subject to the preceding sentence, this Agreement, the Notes and any NPA Guaranty embody the entire agreement and understanding between each Purchaser and the Company and supersede all prior agreements and understandings relating to the subject matter hereof.

**SECTION 17. AMENDMENT AND WAIVER**.

**Section 17.1. Requirements**. This Agreement and the Notes may be amended, and the observance of any term hereof or of the Notes may be waived (either retroactively or prospectively), only with the written consent of the Company and the Required Holders, except that:

(a) no amendment or waiver of any of Sections 1, 2, 3, 4, 5, 6 or 21 hereof, or any defined term (as it is used therein), will be effective as to any Purchaser unless consented to by such Purchaser in writing; and

(b) no amendment or waiver may, without the written consent of each Purchaser and the holder of each Note at the time outstanding, (i) subject to Section 12 relating to acceleration or rescission, change the amount or time of any prepayment or payment of principal of, or reduce the rate or change the time of payment or method of computation of (x) interest on the Notes or (y) the Make-Whole Amount, (ii) change the percentage of the principal amount of the Notes the holders of which are required to consent to any amendment or waiver or the principal amount of the Notes that the Purchasers are to purchase pursuant to Section 2 upon the satisfaction of the conditions to Closing that appear in Section 4, or (iii) amend any of Sections 8 **(**except as set forth in the second sentence of Section 8.2**)**, 11(a), 11(b), 12, 17 or 20.

**Section 17.2. Solicitation of Holders of Notes**.

(a) *Solicitation.* The Company will provide each Purchaser and each holder of a Note with sufficient information, sufficiently far in advance of the date a decision is required, to enable such Purchaser or such holder to make an informed and considered decision with respect to any proposed amendment, waiver or consent in respect of any of the provisions hereof or of the Notes or any NPA Guaranty. The Company will deliver executed or true and correct copies of each

amendment, waiver or consent effected pursuant to this Section 17 or any NPA Guaranty to each Purchaser and each holder of a Note promptly following the date on which it is executed and delivered by, or receives the consent or approval of, the requisite Purchasers or holders of Notes.

(b) *Payment.* The Company will not directly or indirectly pay or cause to be paid any remuneration, whether by way of supplemental or additional interest, fee or otherwise, or grant any security or provide other credit support, to any Purchaser or holder of a Note as consideration for or as an inducement to the entering into by such Purchaser or holder of any waiver or amendment of any of the terms and provisions hereof or of any NPA Guaranty or any Note unless such remuneration is concurrently paid, or security is concurrently granted or other credit support concurrently provided, on the same terms, ratably to each Purchaser and each holder of a Note even if such Purchaser or holder did not consent to such waiver or amendment.

(c) *Consent in Contemplation of Transfer*. Any consent given pursuant to this Section 17 by a holder of a Note that has transferred or has agreed to transfer its Note to (i) the Company, (ii) any Subsidiary or any other Affiliate or (iii) any other Person in connection with, or in anticipation of, such other Person acquiring, making a tender offer for or merging with the Company and/or any of its Affiliates, in each case in connection with such consent, shall be void and of no force or effect except solely as to such holder, and any amendments effected or waivers granted or to be effected or granted that would not have been or would not be so effected or granted but for such consent (and the consents of all other holders of Notes that were acquired under the same or similar conditions) shall be void and of no force or effect except solely as to such holder.

**Section 17.3. Binding Effect, Etc**. Any amendment or waiver consented to as provided in this Section 17 or any NPA Guaranty applies equally to all Purchasers and holders of Notes and is binding upon them and upon each future holder of any Note and upon the Company without regard to whether such Note has been marked to indicate such amendment or waiver. No such amendment or waiver will extend to or affect any obligation, covenant, agreement, Default or Event of Default not expressly amended or waived or impair any right consequent thereon. No course of dealing between the Company and any Purchaser or holder of a Note and no delay in exercising any rights hereunder or under any Note or NPA Guaranty shall operate as a waiver of any rights of any holder of such Note.

**Section 17.4. Notes Held by Company, Etc**. Solely for the purpose of determining whether the Purchasers or holders of the requisite percentage of the aggregate principal amount of Notes then outstanding approved or consented to any amendment, waiver or consent to be given under this Agreement, any NPA Guaranty or the Notes, or have directed the taking of any action provided herein or in any NPA Guaranty or the Notes to be taken upon the direction of the holders of a specified percentage of the aggregate principal amount of Notes then outstanding, Notes directly or indirectly owned by the Company or any of its Affiliates shall be deemed not to be outstanding.

**SECTION 18. NOTICES**.

Except to the extent otherwise provided in Section 7.4, all notices and communications provided for hereunder shall be in writing and sent (a) by telecopy if the sender on the same day

sends a confirming copy of such notice by an internationally recognized overnight delivery service (charges prepaid), (b) by registered or certified mail with return receipt requested (postage prepaid) or (c) by an internationally recognized overnight delivery service (charges prepaid). Any such notice must be sent:

(i) if to any Purchaser or its nominee, to such Purchaser or nominee at the address specified for such communications in the Purchaser Schedule, or at such other address as such Purchaser or nominee shall have specified to the Company in writing,

(ii) if to any other holder of any Note, to such holder at such address as such other holder shall have specified to the Company in writing, or

(iii) if to the Company, to the Company at its address set forth at the beginning hereof to the attention of the Treasurer of the Company, or at such other address as the Company shall have specified to the holder of each Note in writing.

Notwithstanding the foregoing, any notices or communications to be provided by the Company hereunder may be delivered to each Purchaser or its nominee by electronic delivery at the e-mail address set forth for such Purchaser or nominee in the Purchaser Schedule, or, for each Purchaser or its nominee or any holder of a Note, to the e-mail address as communicated from time to time in a separate writing delivered to the Company.

Notices under this Section 18 will be deemed given only when actually received.

**SECTION 19. REPRODUCTION OF DOCUMENTS**.

This Agreement and all documents relating thereto, including (a) consents, waivers and modifications that may hereafter be executed, (b) documents received by any Purchaser at the Closing (except the Notes themselves) and (c) financial statements, certificates and other information previously or hereafter furnished to any Purchaser, may be reproduced by such Purchaser by any photographic, photostatic, electronic, digital, or other similar process and such Purchaser may destroy any original document so reproduced. The Company agrees and stipulates that, to the extent permitted by applicable law, any such reproduction shall be admissible in evidence as the original itself in any judicial or administrative proceeding (whether or not the original is in existence and whether or not such reproduction was made by such Purchaser in the regular course of business) and any enlargement, facsimile or further reproduction of such reproduction shall likewise be admissible in evidence. This Section 19 shall not prohibit the Company or any other holder of Notes from contesting any such reproduction to the same extent that it could contest the original, or from introducing evidence to demonstrate the inaccuracy of any such reproduction.

**SECTION 20. CONFIDENTIAL INFORMATION**.

For the purposes of this Section 20, **"Confidential Information"** means information delivered to any Purchaser by or on behalf of the Company or any Subsidiary in connection with the transactions contemplated by or otherwise pursuant to this Agreement that is proprietary in

nature and that was clearly marked or labeled or otherwise adequately identified when received by such Purchaser as being confidential information of the Company or such Subsidiary, *provided* that such term does not include information that (a) was publicly known or otherwise known to such Purchaser prior to the time of such disclosure, (b) subsequently becomes publicly known through no act or omission by such Purchaser or any Person acting on such Purchaser's behalf or any Person from whom such disclosure would, to the knowledge of such Purchaser, violate a duty of confidentiality to the Company or any Subsidiary, (c) otherwise becomes known to such Purchaser other than through disclosure by the Company or any Subsidiary or any Person from whom such disclosure would, to the knowledge of such Purchaser, violate a duty of confidentiality to the Company or any Subsidiary or (d) constitutes financial statements delivered to such Purchaser under Section 7.1 that are otherwise publicly available. Each Purchaser will maintain the confidentiality of such Confidential Information in accordance with procedures adopted by such Purchaser in good faith to protect confidential information of third parties delivered to such Purchaser, *provided* that such Purchaser may deliver or disclose Confidential Information to (i) its directors, officers, employees, agents, attorneys, trustees and affiliates (to the extent such disclosure reasonably relates to the administration of the investment represented by its Notes), (ii) its auditors, financial advisors and other professional advisors who agree to hold confidential the Confidential Information substantially in accordance with this Section 20, (iii) any other holder of any Note, (iv) any Institutional Investor to which it sells or offers to sell such Note or any part thereof or any participation therein (if such Person has agreed in writing prior to its receipt of such Confidential Information to be bound by this Section 20), (v) any Person from which it offers to purchase any Security of the Company (if such Person has agreed in writing prior to its receipt of such Confidential Information to be bound by this Section 20), (vi) any federal or state regulatory authority having jurisdiction over such Purchaser, (vii) the NAIC or the SVO or, in each case, any similar organization, or any nationally recognized rating agency that requires access to information about such Purchaser's investment portfolio, or (viii) any other Person to which such delivery or disclosure may be necessary or appropriate (w) to effect compliance with any law, rule, regulation or order applicable to such Purchaser, (x) in response to any subpoena or other legal process, (y) in connection with any litigation to which such Purchaser is a party or (z) if an Event of Default has occurred and is continuing, to the extent such Purchaser may reasonably determine such delivery and disclosure to be necessary or appropriate in the enforcement or for the protection of the rights and remedies under such Purchaser's Notes, this Agreement or any NPA Guaranty. Each holder of a Note, by its acceptance of a Note, will be deemed to have agreed to be bound by and to be entitled to the benefits of this Section 20 as though it were a party to this Agreement. On reasonable request by the Company in connection with the delivery to any holder of a Note of information required to be delivered to such holder under this Agreement or requested by such holder (other than a holder that is a party to this Agreement or its nominee), such holder will enter into an agreement with the Company embodying this Section 20.

In the event that as a condition to receiving access to information relating to the Company or its Subsidiaries in connection with the transactions contemplated by or otherwise pursuant to this Agreement, any Purchaser or holder of a Note is required to agree to a confidentiality undertaking (whether through IntraLinks, another secure website, a secure virtual workspace or otherwise) which is different from this Section 20, this Section 20 shall not be amended thereby and, as between such Purchaser or such holder and the Company, this Section 20 shall supersede any such other confidentiality undertaking.

**SECTION 21. SUBSTITUTION OF PURCHASER**.

Each Purchaser shall have the right to substitute any one of its Affiliates or another Purchaser or any one of such other Purchaser's Affiliates (a **"Substitute Purchaser"**) as the purchaser of the Notes that it has agreed to purchase hereunder, by written notice to the Company, which notice shall be signed by both such Purchaser and such Substitute Purchaser, shall contain such Substitute Purchaser's agreement to be bound by this Agreement and shall contain a confirmation by such Substitute Purchaser of the accuracy with respect to it of the representations set forth in Section 6. Upon receipt of such notice, any reference to such Purchaser in this Agreement (other than in this Section 21), shall be deemed to refer to such Substitute Purchaser in lieu of such original Purchaser. In the event that such Substitute Purchaser is so substituted as a Purchaser hereunder and such Substitute Purchaser thereafter transfers to such original Purchaser all of the Notes then held by such Substitute Purchaser, upon receipt by the Company of notice of such transfer, any reference to such Substitute Purchaser as a "Purchaser" in this Agreement (other than in this Section 21), shall no longer be deemed to refer to such Substitute Purchaser, but shall refer to such original Purchaser, and such original Purchaser shall again have all the rights of an original holder of the Notes under this Agreement.

**SECTION 22. MISCELLANEOUS**.

**Section 22.1. Successors and Assigns**. All covenants and other agreements contained in this Agreement by or on behalf of any of the parties hereto bind and inure to the benefit of their respective successors and assigns (including any subsequent holder of a Note) whether so expressed or not, except that, subject to Section 10.2, the Company may not assign or otherwise transfer any of its rights or obligations hereunder or under the Notes without the prior written consent of each holder. Nothing in this Agreement, expressed or implied, shall be construed to confer upon any Person (other than the parties hereto and their respective successors and assigns permitted hereby) any legal or equitable right, remedy or claim under or by reason of this Agreement.

**Section 22.2. Accounting Terms**. (a) All accounting terms used herein which are not expressly defined in this Agreement have the meanings respectively given to them in accordance with GAAP. Except as otherwise specifically provided herein, (i) all computations made pursuant to this Agreement shall be made in accordance with GAAP and (ii) all financial statements shall be prepared in accordance with GAAP. For purposes of determining compliance with this Agreement (including Section 9, Section 10 and the definition of "Indebtedness"), any election by the Company to measure any financial liability using fair value (as permitted by Financial Accounting Standards Board Accounting Standards Codification Topic No. 825-10-25 – *Fair Value Option,* International Accounting Standard 39 – *Financial Instruments: Recognition and Measurement* or any similar accounting standard) shall be disregarded and such determination shall be made as if such election had not been made.

(b) If at any time any change in GAAP would affect the computation of any financial ratio or requirement set forth in this Agreement (including the financial covenant contained in Section 10.7), and either the Company or the Required Holders shall so request, the holders of Notes and the Company shall negotiate in good faith to amend such ratio or requirement to preserve

the original intent thereof in light of such change in GAAP (subject to the approval of the Required Holders); *provided* that, until so amended, (i) such ratio or requirement shall continue to be computed in accordance with GAAP prior to such change therein and (ii) the Company shall provide to the holders of Notes financial statements and other documents required under this Agreement or as reasonably requested hereunder setting forth a reconciliation between calculations of such ratio or requirement made before and after giving effect to such change in GAAP.

**Section 22.3. Severability**. Any provision of this Agreement that is prohibited or unenforceable in any jurisdiction shall, as to such jurisdiction, be ineffective to the extent of such prohibition or unenforceability without invalidating the remaining provisions hereof, and any such prohibition or unenforceability in any jurisdiction shall (to the full extent permitted by law) not invalidate or render unenforceable such provision in any other jurisdiction.

**Section 22.4. Construction, Etc**. Each covenant contained herein shall be construed (absent express provision to the contrary) as being independent of each other covenant contained herein, so that compliance with any one covenant shall not (absent such an express contrary provision) be deemed to excuse compliance with any other covenant. Where any provision herein refers to action to be taken by any Person, or which such Person is prohibited from taking, such provision shall be applicable whether such action is taken directly or indirectly by such Person.

Defined terms herein shall apply equally to the singular and plural forms of the terms defined. Whenever the context may require, any pronoun shall include the corresponding masculine, feminine and neuter forms. The words “include,” “includes” and “including” shall be deemed to be followed by the phrase “without limitation.” The word “will” shall be construed to have the same meaning and effect as the word “shall.” Unless the context requires otherwise (a) any definition of or reference to any agreement, instrument or other document herein shall be construed as referring to such agreement, instrument or other document as from time to time amended, supplemented or otherwise modified (subject to any restrictions on such amendments, supplements or modifications set forth herein) and, for purposes of the Notes, shall also include any such notes issued in substitution therefor pursuant to Section 13, (b) subject to Section 22.1, any reference herein to any Person shall be construed to include such Person’s successors and assigns, (c) the words “herein,” “hereof” and “hereunder,” and words of similar import, shall be construed to refer to this Agreement in its entirety and not to any particular provision hereof, (d) all references herein to Sections and Schedules shall be construed to refer to Sections of, and Schedules to, this Agreement, and (e) any reference to any law or regulation herein shall, unless otherwise specified, refer to such law or regulation as amended, modified or supplemented from time to time.

**Section 22.5. Counterparts**. This Agreement may be executed in any number of counterparts, each of which shall be an original but all of which together shall constitute one instrument. Each counterpart may consist of a number of copies hereof, each signed by less than all, but together signed by all, of the parties hereto. Delivery of an executed counterpart of a signature page of this Agreement by telecopy or other electronic imaging means shall be effective as delivery of a manually executed counterpart of this Agreement. The parties agree to electronic contracting and signatures with respect to this Agreement and any other agreement or instrument hereunder (other than the Notes). Delivery of an electronic signature to, or a signed copy of, this

Agreement and any other agreement or instrument delivered hereunder (other than the Notes) by facsimile, email or other electronic transmission shall be fully binding on the parties to the same extent as the delivery of the signed originals and shall be admissible into evidence for all purposes. The words "execution," "execute", "signed," "signature," and words of like import in or related to any document to be signed in connection with this Agreement and any other agreement or instrument delivered hereunder shall be deemed to include electronic signatures, the electronic matching of assignment terms (other than the Notes) and contract formations on electronic platforms approved by the Issuer, or the keeping of records in electronic form, each of which shall be of the same legal effect, validity or enforceability as a manually executed signature or the use of a paper-based recordkeeping system, as the case may be, to the extent and as provided for in any applicable law, including the Federal Electronic Signatures in Global and National Commerce Act, the New York State Electronic Signatures and Records Act, or any other similar state laws based on the Uniform Electronic Transactions Act.

**Section 22.6. Regulatory Statement**. Pursuant to the terms of an order issued by the NMPRC and a stipulation that has been approved by the NMPRC, the Company is required to include the following separateness covenants in any debt instrument:

(a) The Company and its corporate parent, the Parent, are being operated as separate corporate and legal entities. In agreeing to make loans to Parent, Parent's lenders are relying solely on the creditworthiness of Parent based on the assets owned by Parent, and the repayment of any loan to Parent will be made solely from the assets of Parent and not from any assets of the Company; and the Parent's lenders will not take any steps for the purpose of procuring the appointment of an administrative receiver or the making of an administrative order for instituting any bankruptcy, reorganization, insolvency, wind up or liquidation or any like proceeding under applicable law in respect of the Company.

(b) Notwithstanding any of the foregoing set forth in this Section 22.6, the Company and the holders hereby acknowledge and agree that (i) this Agreement and the Notes evidence Indebtedness of the Company and not of the Parent, (ii) the holders are not, and shall not at any time be deemed to be, "Parent's lenders" under this Agreement and the Notes, (iii) as set forth in this Agreement and the Notes, the Company is responsible for the repayment of all amounts outstanding hereunder, and (iv) the holders of Notes reserve all rights to pursue any and all remedies available at law and otherwise (including in bankruptcy) should the Company breach any of its obligations under this Agreement and/or the Notes.

**Section 22.7. Governing Law**. This Agreement shall be construed and enforced in accordance with, and the rights of the parties shall be governed by, the law of the State of New York excluding choice-of-law principles of the law of such State that would permit the application of the laws of a jurisdiction other than such State.

**Section 22.8. Jurisdiction and Process; Waiver of Jury Trial**. (a) The Company irrevocably submits to the non-exclusive jurisdiction of any New York State or federal court sitting in the Borough of Manhattan, The City of New York, over any suit, action or proceeding arising out of or relating to this Agreement or the Notes. To the fullest extent permitted by applicable

law, the Company irrevocably waives and agrees not to assert, by way of motion, as a defense or otherwise, any claim that it is not subject to the jurisdiction of any such court, any objection that it may now or hereafter have to the laying of the venue of any such suit, action or proceeding brought in any such court and any claim that any such suit, action or proceeding brought in any such court has been brought in an inconvenient forum.

(b) The Company agrees, to the fullest extent permitted by applicable law, that a final judgment in any suit, action or proceeding of the nature referred to in Section 22.8(a) brought in any such court shall be conclusive and binding upon it subject to rights of appeal, as the case may be, and may be enforced in the courts of the United States of America or the State of New York (or any other courts to the jurisdiction of which it or any of its assets is or may be subject) by a suit upon such judgment.

(c) The Company consents to process being served by or on behalf of any holder of Notes in any suit, action or proceeding of the nature referred to in Section 22.8(a) by mailing a copy thereof by registered, certified, priority or express mail (or any substantially similar form of mail), postage prepaid, return receipt or delivery confirmation requested, to it at its address specified in Section 18 or at such other address of which such holder shall then have been notified pursuant to said Section. The Company agrees that such service upon receipt (i) shall be deemed in every respect effective service of process upon it in any such suit, action or proceeding and (ii) shall, to the fullest extent permitted by applicable law, be taken and held to be valid personal service upon and personal delivery to it. Notices hereunder shall be conclusively presumed received as evidenced by a delivery receipt furnished by the United States Postal Service or any reputable commercial delivery service.

(d) Nothing in this Section 22.8 shall affect the right of any holder of a Note to serve process in any manner permitted by law, or limit any right that the holders of any of the Notes may have to bring proceedings against the Company in the courts of any appropriate jurisdiction or to enforce in any lawful manner a judgment obtained in one jurisdiction in any other jurisdiction.

(e) THE PARTIES HERETO HEREBY WAIVE TRIAL BY JURY IN ANY ACTION BROUGHT ON OR WITH RESPECT TO THIS AGREEMENT, THE NOTES OR ANY OTHER DOCUMENT EXECUTED IN CONNECTION HEREWITH OR THEREWITH.

* * * * *

If you are in agreement with the foregoing, please sign the form of agreement on a counterpart of this Agreement and return it to the Company, whereupon this Agreement shall become a binding agreement between you and the Company.

Very truly yours,

PUBLIC SERVICE COMPANY OF NEW MEXICO

By: /s/ Sabrina Greinel
Name: Sabrina G. Greinel
Title: Vice President, Treasurer and Strategy

This Agreement is hereby
accepted and agreed to as
of the date hereof.

COBANK, ACB

By: /s/ Jared Greene
Name: Jared Greene
Title: Assistant Corporate Secretary

This Agreement is hereby
accepted and agreed to as
of the date hereof.

MASSACHUSETTS MUTUAL LIFE INSURANCE COMPANY
By: Barings LLC as Investment Adviser

By: /s/ James Moore
Name: James Moore
Title: Managing Director

MASSMUTUAL ASCEND LIFE INSURANCE COMPANY
By: Barings LLC as Investment Adviser

By: /s/ James Moore
Name: James Moore
Title: Managing Director

BRIGHTHOUSE LIFE INSURANCE COMPANY
By: Brighthouse Services, LLC, as adviser
By: Barings LLC, as Investment Adviser

By: /s/ James Moore
Name: James Moore
Title: Managing Director

This Agreement is hereby
accepted and agreed to as
of the date hereof.

BRIGHTHOUSE LIFE INSURANCE COMPANY
By: MetLife Investment Management, LLC, Its Investment Manager

METLIFE INSURANCE K.K.
By: MetLife Investment Management, LLC, Its Investment Manager

METLIFE REINSURANCE COMPANY OF HAMILTON, LTD.
By: MetLife Investment Management, LLC, Its Investment Manager

METROPOLITAN TOWER LIFE INSURANCE COMPANY
By: MetLife Investment Management, LLC, Its Investment Manager

METROPOLITAN LIFE INSURANCE COMPANY
By: MetLife Investment Management, LLC, Its Investment Manager

By: /s/ Shaun Oliver
Name: Shaun Oliver
Title: Authorized Signatory

FARMERS INSURANCE EXCHANGE
By: MetLife Investment Management, LLC, Its Investment Manager

By: /s/ Shaun Oliver
Name: Shaun Oliver
Title: Authorized Signatory

This Agreement is hereby
accepted and agreed to as
of the date hereof.

NEW YORK LIFE INSURANCE COMPANY
By: NYL Investors LLC, its Investment Manager

By: /s/ Kimberly T. Stepancic
Name: Kimberly T. Stepancic
Title: Senior Director

NEW YORK LIFE INSURANCE AND ANNUITY CORPORATION
By: NYL Investors LLC, its Investment Manager

By: /s/ Kimberly T. Stepancic
Name: Kimberly T. Stepancic
Title: Senior Director

LIFE INSURANCE COMPANY OF NORTH AMERICA
By: NYL Investors LLC, its Investment Manager

By: /s/ Kimberly T. Stepancic
Name: Kimberly T. Stepancic
Title: Senior Director

NEW YORK LIFE GROUP INSURANCE COMPANY OF NY
By: NYL Investors LLC, its Investment Manager

By: /s/ Kimberly T. Stepancic
Name: Kimberly T. Stepancic
Title: Senior Director

This Agreement is hereby accepted and agreed to as of the date hereof.

THE BANK OF NEW YORK MELLON, A BANKING CORPORATION ORGANIZED UNDER THE LAWS OF NEW YORK, NOT IN ITS INDIVIDUAL CAPACITY BUT SOLELY AS TRUSTEE UNDER THAT CERTAIN TRUST AGREEMENT DATED AS OF JULY 1ST, 2015 BETWEEN NEW YORK LIFE INSURANCE COMPANY, AS GRANTOR, JOHN HANCOCK LIFE INSURANCE COMPANY (U.S.A.), AS BENEFICIARY, JOHN HANCOCK LIFE INSURANCE COMPANY OF NEW YORK, AS BENEFICIARY, AND THE BANK OF NEW YORK MELLON, AS TRUSTEE

By: New York Life Insurance Company, its attorney-in-fact
By: NYL Investors LLC, its Investment Manager

By: /s/ Kimberly T. Stepancic
Name: Kimberly T. Stepancic
Title: Senior Director

This Agreement is hereby
accepted and agreed to as
of the date hereof.

PACIFIC LIFE INSURANCE COMPANY

By: /s/ Matthew Levene
Name: Matthew Levene
Title: Vice President

PACIFIC LIFE & ANNUITY COMPANY

By: /s/ Matthew Levene
Name: Matthew Levene
Title: Vice President

This Agreement is hereby
accepted and agreed to as
of the date hereof.

JACKSON NATIONAL LIFE INSURANCE COMPANY OF NEW YORK
By: PPM America, Inc., as attorney in fact, on behalf of Jackson National Life Insurance Company of New York

By: /s/ Jacqueline Baum
Name: Jacqueline Baum
Title: Assistant Vice President

JACKSON NATIONAL LIFE INSURANCE COMPANY
By: PPM America, Inc., as attorney in fact, on behalf of Jackson National Life Insurance Company

By: /s/ Jacqueline Baum
Name: Jacqueline Baum
Title: Assistant Vice President

This Agreement is hereby
accepted and agreed to as
of the date hereof.

HOSPITALS INSURANCE COMPANY, INC.
By: BlackRock Financial Management, Inc., as investment manager

By: /s/ Violet Osterberg
Name: Violet Osterberg
Title: Managing Director

CATASTROPHE REINSURANCE COMPANY
By: BlackRock Financial Management, Inc., as investment manager

By: /s/ Violet Osterberg
Name: Violet Osterberg
Title: Managing Director

GARRISON PROPERTY & CASUALTY INSURANCE COMPANY
By: BlackRock Financial Management, Inc., as investment manager

By: /s/ Violet Osterberg
Name: Violet Osterberg
Title: Managing Director

UNITED SERVICES AUTOMOBILE ASSOCIATION
By: BlackRock Financial Management, Inc., as investment manager

By: /s/ Violet Osterberg
Name: Violet Osterberg
Title: Managing Director

This Agreement is hereby
accepted and agreed to as
of the date hereof.

USAA CASUALTY INSURANCE COMPANY
By: BlackRock Financial Management, Inc., as investment manager

By: /s/ Violet Osterberg
Name: Violet Osterberg
Title: Managing Director

USAA GENERAL INDEMNITY COMPANY
By: BlackRock Financial Management, Inc., as investment manager

By: /s/ Violet Osterberg
Name: Violet Osterberg
Title: Managing Director

USAA LIFE INSURANCE COMPANY OF NEW YORK
By: BlackRock Financial Management, Inc., as investment manager

By: /s/ Violet Osterberg
Name: Violet Osterberg
Title: Managing Director

AMERICAN HOME ASSURANCE COMPANY
By: BlackRock Financial Management, Inc., as investment manager

By: /s/ Violet Osterberg
Name: Violet Osterberg
Title: Managing Director

This Agreement is hereby accepted and agreed to as of the date hereof.

NATIONAL UNION FIRE INSURANCE COMPANY OF PITTSBURGH PA
By: BlackRock Financial Management, Inc., as investment manager

By: /s/ Violet Osterberg
Name: Violet Osterberg
Title: Managing Director

COMMERCE AND INDUSTRY INSURANCE COMPANY
By: BlackRock Financial Management, Inc., as investment manager

By: /s/ Violet Osterberg
Name: Violet Osterberg
Title: Managing Director

LEXINGTON INSURANCE COMPANY
By: BlackRock Financial Management, Inc., as investment manager

By: /s/ Violet Osterberg
Name: Violet Osterberg
Title: Managing Director

This Agreement is hereby
accepted and agreed to as
of the date hereof.

BERKSHIRE LIFE INSURANCE COMPANY OF AMERICA
By: HPS Investment Partners, LLC, its Sub-Manager

By: /s/ Timothy Powell
Name: Timothy Powell
Title: Managing Director

This Agreement is hereby
accepted and agreed to as
of the date hereof.

THE LINCOLN NATIONAL LIFE INSURANCE COMPANY
By: Macquarie Investment Management Advisers, a series of Macquarie Investment Management Business Trust, Attorney in Fact

By: /s/ Karl Spaeth
Name: Karl Spaeth
Title: Senior Vice President

This Agreement is hereby
accepted and agreed to as
of the date hereof.

CMFG LIFE INSURANCE COMPANY
CUMIS INSURANCE SOCIETY, INC.

By: MEMBERS Capital Advisors, Inc., (d/b/a TruStage Investment Management)
acting as Investment Advisor

By: /s/ Stan J. Van Aartsen
Name: Stan J. Van Aartsen
Title: Managing Director, Investments

This Agreement is hereby accepted and agreed to as of the date hereof.

STATE FARM LIFE INSURANCE COMPANY

By: /s/ Rebekah L. Holt
Name: Rebekah L. Holt
Title: Investment Professional

By: /s/ Michelle K. Marsh
Name: Michelle K. Marsh
Title: Investment Professional

STATE FARM LIFE AND ACCIDENT ASSURANCE COMPANY

By: /s/ Rebekah L. Holt
Name: Rebekah L. Holt
Title: Investment Professional

By: /s/ Michelle K. Marsh
Name: Michelle K. Marsh
Title: Investment Professional

STATE FARM INSURANCE COMPANIES EMPLOYEE RETIREMENT TRUST

By: /s/ Rebekah L. Holt
Name: Rebekah L. Holt
Title: Authorized Signer

By: /s/ Michelle K. Marsh
Name: Michelle K. Marsh
Title: Authorized Signer

This Agreement is hereby
accepted and agreed to as
of the date hereof.

KNIGHTS OF COLUMBUS

By: /s/John A. Marella
Name: John A. Marrella
Title: Supreme Secretary

This Agreement is hereby
accepted and agreed to as
of the date hereof.

MODERN WOODMEN OF AMERICA

By: /s/ Christopher M. Cramer
Name: Christopher M. Cramer
Title: Director of Investments

By: /s/Aaron R. Birkland
Name: Aaron R. Birkland
Title: Sr. Portfolio Manager, Private Placements

This Agreement is hereby
accepted and agreed to as
of the date hereof.

SOUTHERN FARM BUREAU LIFE INSURANCE COMPANY

By: /s/ Bradley Blakney
Name: Bradley Blakney
Title: Director

**DEFINED TERMS**

As used herein, the following terms have the respective meanings set forth below or set forth in the Section hereof following such term:

**"Acceptable Rating Agency"** means S&P, Moody's or other nationally recognized statistical ratings organization so designated by the SEC, in each case, whose status has been confirmed by the SVO.

**"Affiliate"** means, at any time, and with respect to any Person, any other Person that at such time directly or indirectly through one or more intermediaries Controls, or is Controlled by, or is under common Control with, such first Person. Unless the context otherwise clearly requires, any reference to an "Affiliate" is a reference to an Affiliate of the Company.

**"Agreement"** means this Note Purchase Agreement, including all Schedules attached to this Agreement, as it may be amended, restated, supplemented or otherwise modified from time to time.

**"Anti-Corruption Laws"** means any law or regulation in a U.S. or any non-U.S. jurisdiction regarding bribery or any other corrupt activity, including the U.S. Foreign Corrupt Practices Act and the U.K. Bribery Act 2010.

**"Anti-Money Laundering Laws"** means any law or regulation in a U.S. or any non-U.S. jurisdiction regarding money laundering, drug trafficking, terrorist-related activities or other money laundering predicate crimes, including the Currency and Foreign Transactions Reporting Act of 1970 (otherwise known as the Bank Secrecy Act) and the USA PATRIOT Act.

**"Authorized Officer"** means any of the president, chief executive officer, chief financial officer or treasurer of the Company.

**"Bankruptcy Code"** means the Bankruptcy Code in Title 11 of the United States Code, as amended, modified, succeeded or replaced from time to time.

"**Blocked Person**" means (a) a Person whose name appears on the list of Specially Designated Nationals and Blocked Persons published by OFAC, (b) a Person, entity or organization that is blocked or a target of sanctions that have been imposed under U.S. Economic Sanctions Laws or (c) a Person that is an agent, department or instrumentality of, or otherwise beneficially owned fifty percent (50%) or more by, controlled by or acting on behalf of, directly or indirectly, any one or more Person(s), entity or organization described in clause (a) or (b) or a Sanctioned Jurisdiction.

**"Business Day"** means any day other than a Saturday, a Sunday or a day on which commercial banks in New York City are required or authorized to be closed.

**"Capital Lease"** means, at any time, a lease with respect to which the lessee is required concurrently to recognize the acquisition of an asset and the incurrence of a liability in accordance with GAAP.

**"Capital Stock"** means (a) in the case of a corporation, all classes of capital stock of such corporation, (b) in the case of a partnership, partnership interests (whether general or limited), (c) in the case of a limited liability company, membership interests and (d) any other interest or participation that confers on a Person the right to receive a share of the profits and losses of, or distributions of assets of, the issuing Person; including, in each case, all warrants, rights or options to purchase any of the foregoing.

**"Change in Law"** means the occurrence, after the date of this Agreement, of any of the following: (a) the adoption or taking effect of any law, rule, regulation or treaty, (b) any change in any law, rule, regulation or treaty or in the administration, interpretation, promulgation, implementation or application thereof by any Governmental Authority, (c) the adoption or taking effect of any request, rule, guideline, policy or directive (whether or not having the force of law) by any Governmental Authority or (d) any change in any request, rule, guideline, policy or directive (whether or not having the force of law) by any Governmental Authority; *provided* that notwithstanding anything herein to the contrary, (i) the Dodd-Frank Wall Street Reform and Consumer Protection Act of 2010 and all requests, rules, guidelines or directives thereunder or issued in connection therewith shall be deemed to be a "Change in Law," regardless of the date enacted, adopted or issued and (ii) all requests, rules, guidelines or directives promulgated by the Bank for International Settlements, the Basel Committee on Banking Supervision (or any successor or similar authority) or the United States regulatory authorities, in each case pursuant to Basel III, shall in each case be deemed to be a "Change in Law," regardless of the date enacted, adopted or issued.

**"Change of Control"** means the failure of the Parent to own and control more than 50% of the Voting Stock of the Company.

**"Closing"** is defined in Section 3.

**"Code"** means the Internal Revenue Code of 1986 and the rules and regulations promulgated thereunder from time to time.

**"Company"** is defined in the first paragraph of this Agreement.

**"Confidential Information"** is defined in Section 20.

**"Consolidated Capitalization"** means the sum of (a) all of the shareholders' equity or net worth of the Company and its Subsidiaries, as determined in accordance with GAAP plus (b) Consolidated Indebtedness minus (c) Securitization Equity.

**"Consolidated Indebtedness"** means, as of any date of determination, with respect to the Company and its Subsidiaries on a consolidated basis, the difference of (a) an amount equal to all Indebtedness of the Company and its Subsidiaries as of such date (other than reimbursement

obligations of the Borrower and its Subsidiaries with respect to surety bonds in an aggregate amount not to exceed $500,000) minus (b) Non-Recourse Securitization Indebtedness.

**"Contingent Obligation"** means, with respect to any Person, any direct or indirect liability of such Person with respect to any Indebtedness, liability or other obligations (the **"primary obligation")** of another Person (the **"primary obligor"),** whether or not contingent, (a) to purchase, repurchase or otherwise acquire such primary obligation or any property constituting direct or indirect security therefor, (b) to advance or provide funds (i) for the payment or discharge of any such primary obligation or (ii) to maintain working capital or equity capital of the primary obligor or otherwise to maintain the net worth or solvency or any balance sheet item, level of income or financial condition of the primary obligor, (c) to purchase property, securities or services primarily for the purpose of assuring the owner of any such primary obligation of the ability of the primary obligor in respect thereof to make payment of such primary obligation or (d) otherwise to assure or hold harmless the owner of any such primary obligation against loss or failure or inability to perform in respect thereof; *provided, however,* that, with respect to the Company and its Subsidiaries, the term Contingent Obligation shall not include endorsements for collection or deposit in the ordinary course of business. The amount of any Contingent Obligation of any Person shall be deemed to be an amount equal to the maximum amount of such Person's liability with respect to the stated or determinable amount of the primary obligation for which such Contingent Obligation is incurred or, if not stated or determinable, the maximum reasonably anticipated liability in respect thereof (assuming such Person is required to perform thereunder).

**"Control"** means the possession, directly or indirectly, of the power to direct or cause the direction of the management and policies of a Person, whether through the ownership of voting securities, by contract or otherwise; and the terms **"Controlled"** and **"Controlling"** shall have meanings correlative to the foregoing.

**"Controlled Entity"** means (a) any of the Subsidiaries of the Company and any of their or the Company's respective Controlled Affiliates and (b) if the Company has a parent company, such parent company and its Controlled Affiliates.

**"Debt Rating"** means the long-term unsecured senior non-credit enhanced debt rating of the Company by an Acceptable Rating Agency.

**"Default"** means an event or condition the occurrence or existence of which would, with the lapse of time or the giving of notice or both, become an Event of Default.

**"Default Rate"** means that rate of interest as defined in the first paragraph of the Notes of such Series.

**"Disclosure Documents"** is defined in Section 5.3.

**"EDGAR"** means the SEC's Electronic Data Gathering, Analysis and Retrieval System or any successor SEC electronic filing system for such purposes.

"**Environmental Claim**" means any and all administrative, regulatory or judicial actions, suits, demands, demand letters, claims, liens, accusations, allegations, notices of noncompliance or violation, investigations (other than internal reports prepared by any Person in the ordinary course of its business and not in response to any third party action or request of any kind) or proceedings relating in any way to any actual or alleged violation of or liability under any Environmental Laws or relating to any permit issued, or any approval given, under any such Environmental Laws (collectively, "**Claims**"), including (a) any and all Claims by Governmental Authorities for enforcement, cleanup, removal, response, remedial or other actions or damages pursuant to any applicable Environmental Laws and (b) any and all Claims by any third party seeking damages, contribution, indemnification, cost recovery, compensation or injunctive relief resulting from Hazardous Materials or arising from alleged injury or threat of injury to human health or the environment.

**"Environmental Laws"** means any and all federal, state, local, and foreign statutes, laws, regulations, ordinances, rules, judgments, orders, decrees, permits, concessions, grants, franchises, licenses, agreements or governmental restrictions relating to pollution and the protection of the environment or the release of any materials into the environment, including those related to Hazardous Materials.

**"ERISA"** means the Employee Retirement Income Security Act of 1974, as amended from time to time, and the rules and regulations promulgated thereunder from time to time in effect.

**"ERISA Affiliate"** means any trade or business (whether or not incorporated) that is treated as a single employer together with the Company under section 414 of the Code.

**"Event of Default"** is defined in Section 11.

**"Execution Date"** is defined in Section 3.

**"FATCA"** means (a) sections 1471 through 1474 of the Code, as of the date of this Agreement (or any amended or successor version), together with any current or future regulations or official interpretations thereof, (b) any treaty, law or regulation of any other jurisdiction, or relating to an intergovernmental agreement between the United States of America and any other jurisdiction, which (in either case) facilitates the implementation of the foregoing clause (a), and (c) any agreements entered into pursuant to section 1471(b)(1) of the Code.

**"Financial Covenant"** is defined in Section 9.8(a).

**"Fiscal Quarter"** means each of the calendar quarters ending as of the last day of each March, June, September and December.

**"Fiscal Year"** means the calendar year ending December 31.

**"GAAP"** means (a) generally accepted accounting principles as in effect from time to time in the United States of America and (b) for purposes of Section 9.6, with respect to any Subsidiary,

generally accepted accounting principles (including International Financial Reporting Standards, as applicable) as in effect from time to time in the jurisdiction of organization of such Subsidiary.

**"Guarantor"** is defined in Section 9.7.

**"Governmental Authority"** means

(a) the government of

(i) the United States of America or any state or other political subdivision thereof, or

(ii) any other jurisdiction in which the Company or any Subsidiary conducts all or any part of its business, or which asserts jurisdiction over any properties of the Company or any Subsidiary, or

(b) any entity exercising executive, legislative, judicial, regulatory or administrative functions of, or pertaining to, any such government.

**"Governmental Official"** means any governmental official or employee, employee of any government-owned or government-controlled entity, political party, any official of a political party, candidate for political office, official of any public international organization or anyone else acting in an official capacity.

**"Guaranty"** means, with respect to any Person, any obligation (except the endorsement in the ordinary course of business of negotiable instruments for deposit or collection) of such Person guaranteeing or in effect guaranteeing any indebtedness, dividend or other obligation of any other Person in any manner, whether directly or indirectly, including obligations incurred through an agreement, contingent or otherwise, by such Person:

(a) to purchase such indebtedness or obligation or any property constituting security therefor;

(b) to advance or supply funds (i) for the purchase or payment of such indebtedness or obligation, or (ii) to maintain any working capital or other balance sheet condition or any income statement condition of any other Person or otherwise to advance or make available funds for the purchase or payment of such indebtedness or obligation;

(c) to lease properties or to purchase properties or services primarily for the purpose of assuring the owner of such indebtedness or obligation of the ability of any other Person to make payment of the indebtedness or obligation; or

(d) otherwise to assure the owner of such indebtedness or obligation against loss in respect thereof.

In any computation of the indebtedness or other liabilities of the obligor under any Guaranty, the indebtedness or other obligations that are the subject of such Guaranty shall be assumed to be direct obligations of such obligor.

**"Hazardous Materials"** means any and all pollutants, toxic or hazardous wastes or other substances that might pose a hazard to health and safety, the removal of which may be required or the generation, manufacture, refining, production, processing, treatment, storage, handling, transportation, transfer, use, disposal, release, discharge, spillage, seepage or filtration of which is or shall be restricted, prohibited or penalized by any applicable law, including asbestos, urea formaldehyde foam insulation, polychlorinated biphenyls, petroleum, petroleum products, lead based paint, radon gas or similar restricted, prohibited or penalized substances.

**"Hedging Agreements"** means, collectively, interest rate protection agreements, equity index agreements, foreign currency exchange agreements, option agreements or other interest or exchange rate or commodity price hedging agreements (other than forward contracts for the delivery of power or gas written by the Company to its jurisdictional and wholesale customers in the ordinary course of business).

**"holder"** means, with respect to any Note, the Person in whose name such Note is registered in the register maintained by the Company pursuant to Section 13.1, *provided, however,* that if such Person is a nominee, then for the purposes of Sections 7, 12, 17.2 and 18 and any related definitions in this Schedule A, "holder" shall mean the beneficial owner of such Note whose name and address appears in such register.

**"INHAM Exemption"** is defined in Section 6.2(e).

**"Indebtedness"** means, with respect to any Person (without duplication), (a) all indebtedness and obligations of such Person for borrowed money or in respect of loans or advances of any kind, (b) all obligations of such Person evidenced by notes, bonds, debentures or similar instruments, (c) all reimbursement obligations of such Person with respect to surety bonds, letters of credit and bankers' acceptances (in each case, whether or not drawn or matured and in the stated amount thereof), (d) all obligations of such Person to pay the deferred purchase price of property or services, (e) all indebtedness created or arising under any conditional sale or other title retention agreement with respect to property acquired by such Person, (f) all obligations of such Person as lessee under leases that are or are required to be, in accordance with GAAP, recorded as capital leases, to the extent such obligations are required to be so recorded, (g) the net termination obligations of such Person under any Hedging Agreements, calculated as of any date as if such agreement or arrangement were terminated as of such date in accordance with the applicable rules under GAAP, (h) all Contingent Obligations of such Person, (i) all obligations and liabilities of such Person incurred in connection with any transaction or series of transactions providing for the financing of assets through one or more securitizations or in connection with, or pursuant to, any synthetic lease or similar off-balance sheet financing, (j) the aggregate amount of uncollected accounts receivable of such Person subject at the time of determination to a sale of receivables (or similar transaction) to the extent such transaction is effected with recourse to such Person (whether or not such transaction would be reflected on the balance sheet of such Person in accordance with GAAP) and (k) all indebtedness referred to in clauses (a) through (j) above secured by any Lien

on any property or asset owned or held by such Person regardless of whether the indebtedness secured thereby shall have been assumed by such Person or is nonrecourse to the credit of such Person.

**"Institutional Investor"** means (a) any Purchaser of a Note, (b) any holder of a Note holding (together with one or more of its affiliates) more than 5% of the aggregate principal amount of the Notes then outstanding, (c) any bank, trust company, savings and loan association or other financial institution, any pension plan, any investment company, any insurance company, any broker or dealer, or any other similar financial institution or entity, regardless of legal form, and (d) any Related Fund of any holder of any Note.

**"Lien"** means any mortgage, pledge, hypothecation, assignment, security interest, lien (statutory or otherwise), preference, priority, charge or other encumbrance of any nature, whether voluntary or involuntary, including the interest of any vendor or lessor under any conditional sale agreement, title retention agreement, capital lease or any other lease or arrangement having substantially the same effect as any of the foregoing.

**"Make-Whole Amount"** is defined in Section 8.6.

**"Margin Stock"** has the meaning ascribed to such term in Regulation U.

**"Material"** means material in relation to the business, operations, affairs, financial condition, assets or properties of the Company and its Subsidiaries taken as a whole.

**"Material Adverse Effect"** means a material adverse effect on (a) the business, operations, affairs, financial condition, assets or properties of the Company and its Subsidiaries taken as a whole, (b) the ability of the Company to perform its obligations under this Agreement and the Notes or (c) the validity or enforceability of this Agreement or the Notes, *provided*, *however*, that a Material Adverse Effect shall not include the effect of the shutdown or closure of the San Juan Generating Station or the Four Corners Power Plant, *provided* that the Company remains in compliance with Section 10.7 of this Agreement.

**"Material Credit Facility"** means, as to the Company and its Subsidiaries,

(a) the Seventh Amendment to and Restatement of Credit Agreement dated as of April 1, 2024 among the Company, the lenders identified therein, and Wells Fargo Bank, National Association, as administrative agent, including any renewals, extensions, amendments, supplements, restatements, replacements or refinancing thereof;

(b) the Amended and Restated Credit Agreement dated as of May 20, 2022 among the Company, the lenders identified therein, U.S. Bank National Association, as administrative agent, and BOKF, NA dba Bank Of Albuquerque, as syndication agent.

(c) the Term Loan Agreement dated as of May 10, 2024 among the Company, the lenders identified therein and U.S. Bank National Association, as administrative agent,

including any renewals, extensions, amendments, supplements, restatements, replacements or refinancing thereof;

(d) the Term Loan Agreement dated as of January 21, 2025 among the Company, the lender parties therein and Canadian Imperial Bank of Commerce, New York Branch, as administrative agent, including any renewals, extensions, amendments, supplements, restatements, replacements or refinancing thereof;

(e) the Note Purchase Agreement dated as of July 28, 2017 among the Company and the holders of the notes issued thereunder, including any renewals, extensions, amendments, supplements, restatements, replacements or refinancing thereof;

(f) the Note Purchase Agreement dated as of April 30, 2020 among the Company and the holders of the notes issued thereunder, including any renewals, extensions, amendments, supplements, restatements, replacements or refinancing thereof;

(g) the Note Purchase Agreement dated as of July 14, 2021 among the Company and the holders of the notes issued thereunder, including any renewals, extensions, amendments, supplements, restatements, replacements or refinancing thereof;

(h) the Note Purchase Agreement dated as of September 23, 2021 among the Company and the holders of the notes issued thereunder, including any renewals, extensions, amendments, supplements, restatements, replacements or refinancing thereof;

(i) the Note Purchase Agreement dated as of April 28, 2023 among the Company and the holders of the notes issued thereunder, including any renewals, extensions, amendments, supplements, restatements, replacements or refinancing thereof; and

(j) the Note Purchase Agreement dated as of April 23, 2025 among the Company and the holders of the notes issued thereunder, including any renewals, extensions, amendments, supplements, restatements, replacements or refinancing thereof; and

(k) any other agreement(s) creating or evidencing indebtedness for borrowed money (other than indebtedness owed to affiliates of the Company) entered into on or after the date of this Agreement by the Company or any Subsidiary, or in respect of which the Company or any Subsidiary is an obligor or otherwise provides a guarantee or other credit support (**"Credit Facility"**), in a principal amount outstanding or available for borrowing equal to or greater than (i) $75,000,000 for the purposes of Section 9.8 (or the equivalent of such amount in the relevant currency of payment, determined as of the date of the closing of such facility based on the exchange rate of such other currency) or (ii) $40,000,000 for all other provisions under this Agreement (or the equivalent of such amount in the relevant currency of payment, determined as of the date of the closing of such facility based on the exchange rate of such other currency); and if no Credit Facility or Credit Facilities equal

or exceed such amounts, then the largest Credit Facility shall be deemed to be a Material Credit Facility.

**"Maturity Date"** is defined in the first paragraph of each Note.

**"Modified Covenant"** is defined in Section 9.8(a).

**"Moody's"** means Moody's Investors Service, Inc. and its successors.

**"Most Favored Lender Notice"** is defined in Section 9.8(c).

**"Multiemployer Plan"** means any Plan that is a "multiemployer plan" (as such term is defined in section 4001(a)(3) of ERISA).

**"NAIC"** means the National Association of Insurance Commissioners.

**"NMPRC"** means the New Mexico Public Regulation Commission or any successor commission.

**"Non-U.S. Plan"** means any plan, fund or other similar program that (a) is established or maintained outside the United States of America by the Company or any Subsidiary primarily for the benefit of employees of the Company or one or more Subsidiaries residing outside the United States of America, which plan, fund or other similar program provides, or results in, retirement income, a deferral of income in contemplation of retirement or payments to be made upon termination of employment and (b) is not subject to ERISA or the Code.

**"Non-Recourse Securitization Indebtedness"** means, as of any date of determination, all Indebtedness related to State Approved Securitizations up to a maximum amount of $750,000,000 at any one time; *provided* that such Indebtedness is non-recourse to the Company, other than with respect to Standard Securitization Undertakings.

**"Non-Subsidiary Guarantor"** is defined in Section 9.7(a).

**"Notes"** is defined in Section 1.

**"NPA Guaranty"** is defined in Section 9.7(a).

**"OFAC"** means the Office of Foreign Assets Control of the United States Department of the Treasury.

**"OFAC Sanctions Program"** means any economic or trade sanction that OFAC is responsible for administering and enforcing. A list of OFAC Sanctions Programs may be found at http://www.treasury.gov/resource-center/sanctions/Programs/Pages/Programs.aspx.

**"Officer's Certificate"** means a certificate of a Senior Financial Officer or of any other officer of the Company whose responsibilities extend to the subject matter of such certificate.

**"Parent"** means TXNM Energy Inc., a New Mexico corporation.

**"PBGC"** means the Pension Benefit Guaranty Corporation referred to and defined in ERISA.

**"Person"** means an individual, partnership, corporation, limited liability company, association, trust, unincorporated organization, business entity or Governmental Authority.

**"Plan"** means an "employee benefit plan" (as defined in section 3(3) of ERISA) subject to Title I of ERISA that is or, within the preceding five (5) years, has been established or maintained, or to which contributions are or, within the preceding five (5) years, have been made or required to be made, by the Company or any ERISA Affiliate or with respect to which the Company or any ERISA Affiliate may have any liability.

**"Property"** means any right, title or interest in or to any property or asset of any kind whatsoever, whether real, personal or mixed and whether tangible or intangible.

**"property"** or **"properties"** means, unless otherwise specifically limited, real or personal property of any kind, tangible or intangible, choate or inchoate.

**"PTE"** is defined in Section 6.2(a).

**"Purchaser"** or **"Purchasers"** means each of the purchasers that has executed and delivered this Agreement to the Company and such Purchaser's successors and assigns (so long as any such assignment complies with Section 13.2), *provided, however,* that any Purchaser of a Note that ceases to be the registered holder or a beneficial owner (through a nominee) of such Note as the result of a transfer thereof pursuant to Section 13.2 shall cease to be included within the meaning of "Purchaser" of such Note for the purposes of this Agreement upon such transfer.

**"Purchaser Schedule"** means the Purchaser Schedule to this Agreement listing the Purchasers of the Notes and including their notice and payment information.

**"Qualified Institutional Buyer"** means any Person who is a "qualified institutional buyer" within the meaning of such term as set forth in Rule 144A(a)(1) under the Securities Act.

**"QPAM Exemption"** is defined in Section 6.2(d).

**"Related Fund"** means, with respect to any holder of any Note, any fund or entity that (a) invests in Securities or bank loans, and (b) is advised or managed by such holder, the same investment advisor as such holder or by an affiliate of such holder or such investment advisor.

**"Required Holders"** means, at any time, (a) prior to the Closing, the Purchasers, and (b) on or after the date of the Closing, the holders of at least 51% in principal amount of the Notes at the time outstanding (exclusive of Notes then owned by the Company or any of its Affiliates).

**"Responsible Officer"** means any Senior Financial Officer and any other officer of the Company with responsibility for the administration of the relevant portion of this Agreement.

"**Sanctioned Jurisdiction**" means, at any time, a country or territory which is itself subject to or the target of any comprehensive country-wide sanctions under U.S. Economic Sanctions Laws (as opposed to individual, entity or other list-based sanctions).

**"S&P"** means S&P Global Ratings, and its successors.

**"SEC"** means the Securities and Exchange Commission of the United States of America.

**"Securities"** or **"Security"** shall have the meaning specified in section 2(1) of the Securities Act.

**"Securities Act"** means the Securities Act of 1933, as amended from time to time, and the rules and regulations promulgated thereunder from time to time in effect.

**"Securitization Equity"** means, as of any date of determination, with respect to a Subsidiary of the Company formed for the purpose of entering into a State Approved Securitization, all of the equity of such Subsidiary, as determined in accordance with GAAP.

**"Senior Financial Officer"** means the chief financial officer, principal accounting officer, treasurer or controller of the Company.

**"Series"** is defined in Section 1.

**"Series C Notes"** is defined in Section 1.

**"Series D Notes"** is defined in Section 1.

"**Significant Subsidiary**" means at any time any Subsidiary that would at such time constitute a "significant subsidiary" (as such term is defined in Regulation S-X of the SEC as in effect on the date of this Agreement) of the Company.

**"Solvent"** means, with respect to any Person as of a particular date, that on such date (a) such Person is able to pay its debts and other liabilities, Contingent Obligations and other commitments as they mature in the normal course of business, (b) such Person does not intend to, and does not believe that it will, incur debts or liabilities beyond such Person's ability to pay as such debts and liabilities mature in their ordinary course, (c) such Person is not engaged in a business or a transaction, and is not about to engage in a business or a transaction, for which such Person's assets would constitute unreasonably small capital after giving due consideration to the prevailing practice in the industry in which such Person is engaged or is to engage, (d) the fair value of the assets of such Person is greater than the total amount of liabilities of such Person and (e) the present fair saleable value of the assets of such Person is not less than the amount that will be required to pay the probable liability of such Person on its debts as they become absolute and matured.

**"Source"** is defined in Section 6.2.

**"Standard Securitization Undertakings"** means representations, warranties, covenants and indemnities entered into by the Company or a Subsidiary thereof that are reasonably customary in non-recourse securitization transactions.

**"State Approved Securitization"** means a securitization financing entered into by the Company pursuant to existing or future New Mexico statutory authority and regulatory approval by the NMPRC authorizing the imposition on electric customers of a charge to permit the recovery over time of costs identified by a financing order issued by the NMPRC pursuant to statutory authority, so long as such securitization financing is non-recourse to the Company (other than with respect to Standard Securitization Undertakings).

**"State Sanctions List"** means a list that is adopted by any state Governmental Authority within the United States of America pertaining to Persons that engage in investment or other commercial activities in Iran or any other country that is a target of economic sanctions imposed under U.S. Economic Sanctions Laws.

**"Subsidiary"** means, as to any Person, any other Person in which such first Person or one or more of its Subsidiaries or such first Person and one or more of its Subsidiaries owns sufficient equity or voting interests to enable it or them (as a group) ordinarily, in the absence of contingencies, to elect a majority of the directors (or Persons performing similar functions) of such second Person, and any partnership or joint venture if more than a 50% interest in the profits or capital thereof is owned by such first Person or one or more of its Subsidiaries or such first Person and one or more of its Subsidiaries (unless such partnership or joint venture can and does ordinarily take major business actions without the prior approval of such Person or one or more of its Subsidiaries). Any reference to a Subsidiary of the Company herein shall not include a Subsidiary that is inactive, has minimal or no assets and does not generate revenues. Unless the context otherwise clearly requires, any reference to a "Subsidiary" is a reference to a Subsidiary of the Company.

**"Substitute Purchaser"** is defined in Section 21.

**"SVO"** means the Securities Valuation Office of the NAIC.

**"United States Person"** has the meaning set forth in Section 7701(a)(30) of the Code.

**"USA PATRIOT Act"** means United States Public Law 107-56, Uniting and Strengthening America by Providing Appropriate Tools Required to Intercept and Obstruct Terrorism (USA PATRIOT ACT) Act of 2001 and the rules and regulations promulgated thereunder from time to time in effect.

**"U.S. Economic Sanctions Laws"** means those laws, executive orders, enabling legislation or regulations administered and enforced by the United States pursuant to which economic sanctions have been imposed on any Person, entity, organization, country or regime, including the Trading with the Enemy Act, the International Emergency Economic Powers Act,

the Iran Sanctions Act, the Sudan Accountability and Divestment Act and any other OFAC Sanctions Program.

**"Voting Stock"** means the Capital Stock of a Person that is then outstanding and normally entitled to vote in the election of directors and other securities of such Person convertible into or exercisable for such Capital Stock (whether or not such securities are then currently convertible or exercisable).

**"Wholly-Owned Subsidiary"** means, at any time, any Subsidiary all of the equity interests (except directors' qualifying shares) and voting interests of which are owned by any one or more of the Company and the Company's other Wholly-Owned Subsidiaries at such time.

**[FORM OF SERIES C NOTE]**

**PUBLIC SERVICE COMPANY OF NEW MEXICO**

**5.47% SENIOR UNSECURED NOTE, SERIES C, DUE JULY 31, 2031**

No. [_____] **[Date]**
$[_____] PPN 744542 G*6

FOR VALUE RECEIVED, the undersigned, PUBLIC SERVICE COMPANY OF NEW MEXICO (herein called the **"Company"**), a corporation organized and existing under the laws of the State of New Mexico, hereby promises to pay to [_____], or registered assigns, the principal sum of [_____] DOLLARS (or so much thereof as shall not have been prepaid) on July 31, 2031 (the **"Maturity Date"**), with interest (computed on the basis of a 360-day year of twelve 30-day months) (a) on the unpaid balance hereof at the rate of 5.47% per annum from the date hereof, payable semiannually, on the 31st day of January and July in each year, commencing with January 31, 2026, and on the Maturity Date, until the principal hereof shall have become due and payable, and (b) to the extent permitted by law, (x) on any overdue payment of interest and (y) during the continuance of an Event of Default, on such unpaid balance and on any overdue payment of any Make-Whole Amount, at a rate per annum from time to time equal to the greater of (i) 7.47% or (ii) 2.00% over the rate of interest publicly announced by Wells Fargo Bank, National Association from time to time in New York, New York as its "base" or "prime" rate, payable semiannually as aforesaid (or, at the option of the registered holder hereof, on demand) (the **"Default Rate"**).

Payments of principal of, interest on and any Make-Whole Amount with respect to this Note are to be made in lawful money of the United States of America at Wells Fargo Bank, National Association or at such other place as the Company shall have designated by written notice to the holder of this Note as provided in the Note Purchase Agreement referred to below.

This Note is one of a series of Senior Unsecured Notes (herein called the **"Notes"**) issued pursuant to the Note Purchase Agreement, dated July 31, 2025 (as from time to time amended, the **"Note Purchase Agreement"**), between the Company and the respective Purchasers named therein and is entitled to the benefits thereof. Each holder of this Note will be deemed, by its acceptance hereof, to have (i) agreed to the confidentiality provisions set forth in Section 20 of the Note Purchase Agreement and (ii) made the representation set forth in Section 6.2 of the Note Purchase Agreement. Unless otherwise indicated, capitalized terms used in this Note shall have the respective meanings ascribed to such terms in the Note Purchase Agreement.

This Note is a registered Note and, as provided in the Note Purchase Agreement, upon surrender of this Note for registration of transfer accompanied by a written instrument of transfer duly executed, by the registered holder hereof or such holder's attorney duly authorized in writing, a new Note for a like principal amount will be issued to, and registered in the name of, the

transferee. Prior to due presentment for registration of transfer, the Company may treat the Person in whose name this Note is registered as the owner hereof for the purpose of receiving payment and for all other purposes, and the Company will not be affected by any notice to the contrary.

This Note is subject to optional prepayment, in whole or from time to time in part, at the times and on the terms specified in the Note Purchase Agreement, but not otherwise.

If an Event of Default occurs and is continuing, the principal of this Note may be declared or otherwise become due and payable in the manner, at the price (including any applicable Make-Whole Amount) and with the effect provided in the Note Purchase Agreement.

This Note shall be construed and enforced in accordance with, and the rights of the Company and the holder of this Note shall be governed by, the law of the State of New York excluding choice-of-law principles of the law of such State that would permit the application of the laws of a jurisdiction other than such State.

PUBLIC SERVICE COMPANY OF NEW MEXICO

By __

**[FORM OF SERIES D NOTE]**

**PUBLIC SERVICE COMPANY OF NEW MEXICO**

**6.03% SENIOR UNSECURED NOTE, SERIES D, DUE JULY 31, 2036**

No. [_____] **[Date]**
$[_____] PPN 744542 G@4

FOR VALUE RECEIVED, the undersigned, PUBLIC SERVICE COMPANY OF NEW MEXICO (herein called the **"Company"**), a corporation organized and existing under the laws of the State of New Mexico, hereby promises to pay to [_____], or registered assigns, the principal sum of [_____] DOLLARS (or so much thereof as shall not have been prepaid) on July 31, 2036 (the **"Maturity Date"**), with interest (computed on the basis of a 360-day year of twelve 30-day months) (a) on the unpaid balance hereof at the rate of 6.03% per annum from the date hereof, payable semiannually, on the 31st day of January and July in each year, commencing with January 31, 2026, and on the Maturity Date, until the principal hereof shall have become due and payable, and (b) to the extent permitted by law, (x) on any overdue payment of interest and (y) during the continuance of an Event of Default, on such unpaid balance and on any overdue payment of any Make-Whole Amount, at a rate per annum from time to time equal to the greater of (i) 8.03% or (ii) 2.00% over the rate of interest publicly announced by Wells Fargo Bank, National Association from time to time in New York, New York as its "base" or "prime" rate, payable semiannually as aforesaid (or, at the option of the registered holder hereof, on demand).

Payments of principal of, interest on and any Make-Whole Amount with respect to this Note are to be made in lawful money of the United States of America at Wells Fargo Bank, National Association or at such other place as the Company shall have designated by written notice to the holder of this Note as provided in the Note Purchase Agreement referred to below.

This Note is one of a series of Senior Unsecured Notes (herein called the **"Notes"**) issued pursuant to the Note Purchase Agreement, dated July 31, 2025 (as from time to time amended, the **"Note Purchase Agreement"**), between the Company and the respective Purchasers named therein and is entitled to the benefits thereof. Each holder of this Note will be deemed, by its acceptance hereof, to have (i) agreed to the confidentiality provisions set forth in Section 20 of the Note Purchase Agreement and (ii) made the representation set forth in Section 6.2 of the Note Purchase Agreement. Unless otherwise indicated, capitalized terms used in this Note shall have the respective meanings ascribed to such terms in the Note Purchase Agreement.

This Note is a registered Note and, as provided in the Note Purchase Agreement, upon surrender of this Note for registration of transfer accompanied by a written instrument of transfer duly executed, by the registered holder hereof or such holder's attorney duly authorized in writing, a new Note for a like principal amount will be issued to, and registered in the name of, the

transferee. Prior to due presentment for registration of transfer, the Company may treat the Person in whose name this Note is registered as the owner hereof for the purpose of receiving payment and for all other purposes, and the Company will not be affected by any notice to the contrary.

This Note is subject to optional prepayment, in whole or from time to time in part, at the times and on the terms specified in the Note Purchase Agreement, but not otherwise.

If an Event of Default occurs and is continuing, the principal of this Note may be declared or otherwise become due and payable in the manner, at the price (including any applicable Make-Whole Amount) and with the effect provided in the Note Purchase Agreement.

This Note shall be construed and enforced in accordance with, and the rights of the Company and the holder of this Note shall be governed by, the law of the State of New York excluding choice-of-law principles of the law of such State that would permit the application of the laws of a jurisdiction other than such State.

PUBLIC SERVICE COMPANY OF NEW MEXICO

By___

**SCHEDULE 4.4(a)**

**FORM OF OPINION OF IN-HOUSE COUNSEL TO THE COMPANY**

The following opinions are to be provided by in-house counsel to the Company, pursuant to New Mexico law, subject to customary assumptions, limitations and qualifications. All capitalized terms used herein without definition shall have the meanings ascribed thereto in the Note Purchase Agreement.

1. The Company is a corporation validly existing and in good standing under the laws the State of New Mexico.

2. The Company has the corporate power and execute, deliver and perform its obligations under the Note Purchase Agreement and the Notes, and the Company has taken all necessary corporate action to authorize the execution, delivery and performance by it of the Note Purchase Agreement and the Notes.

3. The Company has duly executed and delivered the Note Purchase Agreement and the Notes.

4. Other than the Company's filing with the NMPRC, and the NMPRC's approval, of the transactions contemplated by the Note Purchase Agreement, which have previously been made and obtained, no consent, approval or authorization of, or filing with, any governmental authority of the State of New Mexico applicable to the Company is required in connection with the execution, delivery or performance of the Note Purchase Agreement and the Notes by the Company, except (i) as have been previously made or obtained and (ii) filings which are necessary in order to release liens not permitted by the Note Purchase Agreement.

5. The execution, delivery and performance by the Company of the Note Purchase Agreement and the Notes do not (i) violate the articles of incorporation or bylaws of the Company, (ii) violate any applicable law or regulation of the State of New Mexico, (iii) violate or constitute a default under any order, decree, injunction or judgment (each an "Order") or under any material indenture, credit agreement, mortgage, deed of trust, contract or other agreement or instrument (each an "Agreement"), in each case known to me and to which the Company is a party or by which the Company or its properties may be bound or (iv) to my knowledge, result in the creation or imposition of any Lien on any asset of the Company pursuant to the terms of any Order or Agreement.

6. To my knowledge, after making reasonable inquiry of other members of the law department of the Company, and except as disclosed in the Company's Annual Report on Form 10-K for the Fiscal Year ended December 31, 2024, there are no actions, suits or legal, equitable, arbitration or administrative proceedings pending or threatened against the Borrower that (a) draw into question the validity of the Note Purchase Agreement or the Notes or (b) would have or would be reasonably expected to have a Material Adverse Effect.

**FORM OF OPINION OF SPECIAL COUNSEL
FOR THE COMPANY**

The following opinions are to be provided by the special counsel of the Company, pursuant to New York and federal law, subject to customary assumptions (including assumptions regarding matters covered by the opinion of Company counsel), limitations and qualifications. All capitalized terms used herein without definition shall have the meanings ascribed thereto in the Note Purchase Agreement.

1. Each of the Note Purchase Agreement and the Notes constitutes a valid and binding obligation of the Company, enforceable against the Company in accordance its terms under the laws of the State of New York.

2. No consent, approval or authorization of or filing with, any Governmental Authority of the State of New York or the United States that, in each case, is applicable to the Company is required for the execution, delivery or performance by the Company of the Note Purchase Agreement or the Notes, except (i) as have been previously made or obtained and (ii) filings which are necessary in order to release liens not permitted by the Note Purchase Agreement, if any.

3. The Company is not required to be registered under the Investment Company Act of 1940, as amended.

4. No registration under the Securities Act of 1933, as amended, of the Notes, and no qualification of an Indenture under the Trust Indenture Act of 1939, as amended, in respect of the Notes, is required for the offer and sale of the Notes in the manner contemplated by the Note Purchase Agreement, it being understood that no opinion is expressed as to any subsequent resale of any Notes.

5. Neither the execution and delivery by the Company of the Note Purchase Agreement or the Notes, nor the performance by the Company of its obligations thereunder violates any statute or regulation of New York or United States federal law (including Regulation T, U or X of the Board of Governors of the United States Federal Reserve System) that is applicable to the Company.

**SCHEDULE 5.3**

**DISCLOSURE DOCUMENTS**

**PUBLIC SERVICE COMPANY OF NEW MEXICO**

**SyndTrak Items:**

Cover Letter

PNM Note Purchase Agreement

PNM Note Purchase Agreement – Redline

Investor Call Presentation

**Financial Statements Listed in Schedule 5.5**

**SEC Filings**: PNM's Annual Reports on Form 10-K for the years ended December 31, 2022-2024, PNM's Quarterly Report for the quarterly period ended March 31, 2025, and Current Reports on Form 8-K filed to date in 2025 are all available on the following link:

http://www.sec.gov/cgi-bin/browse-edgar?action=getcompany&CIK=0000081023&owner=exclude&count=40&hidefilings=0

**SCHEDULE 5.4**

**AFFILIATES; DIRECTORS AND OFFICERS**

The Company's Subsidiaries (as defined):

PNM Energy Transition Bond Company I, LLC is bankruptcy remote special purpose entity formed and operated for the limited purposes of a State Approved Securitization.

i) The Company's Affiliates[1], other than Subsidiaries (as defined):

a) TXNM Energy, Inc.
b) TNP Enterprises, Inc.
c) Texas-New Mexico Power Company
d) PNMR Services Company
e) PNMR Development and Management Corporation
f) Luna Power Company, LLC
g) New Mexico PPA Corporation (f/k/a NM Capital Utility Corporation)

ii) The Company's Directors and Officers:

a) Directors:
Patricia K. Collawn, Chairman
Monique M. Jacobson, Director
Henry E. Monroy, Director
Joseph D. Tarry, Director

b) Officers:
Gerald R. Bischoff, Vice President and Corporate Controller
Wesley W. Gray, Vice President, PNM Operations and Engineering
Sabrina G. Greinel, Vice President, Treasurer and Strategy
Brian G. Iverson, General Counsel, Senior Vice President Regulatory and Public Policy, and Corporate Secretary
Monique M. Jacobson, Senior Vice President, Corporate Services
Kathleen Larese, Vice President, Customer Operations
Sheila M. Mendez, Vice President and Chief Information Officer
Henry E. Monroy, Senior Vice President and Chief Financial Officer
Kyle T. Sanders, Vice President, Regulatory
Joseph D. Tarry, President and Chief Executive Officer

[1] List does not include inactive Affiliates.

Becky R. Teague, Vice President, Human Resources
Omni B. Warner, Senior Vice President, PNM Operations
Laurie Williams, Senior Vice President, PNM Integrated Planning and Transmission Development

**SCHEDULE 5.5**

**FINANCIAL STATEMENTS OF PUBLIC SERVICE COMPANY OF NEW MEXICO CONTAINED IN THE FOLLOWING SEC FILINGS:**

| Date Filed | SEC Filings | Description |
|---|---|---|
| 02/28/2023 | 10-K | Annual Report for year ended 12/31/22 |
| 02/29/2024 | 10-K | Annual Report for year ended 12/31/23 |
| 02/28/2025 | 10-K | Annual Report for year ended 12/31/24 |
| 05/09/2025 | 10-Q | Quarterly Report for period ended 3/31/25 |

**Available on the following link:**

http://www.sec.gov/cgi-bin/browse-edgar?action=getcompany&CIK=0000081023&owner=exclude&count=40&hidefilings=0

**SCHEDULE 5.15**

**EXISTING INDEBTEDNESS OF THE COMPANY AT MARCH 31, 2025[2]**

| Description | Principal Outstanding (000s) | Interest Rate | Year Issued | Final Maturity Date | Tax Exempt Mandatory Put Date |
|---|---|---|---|---|---|
| Farmington PCBs, 2016 Series A | $46,000 | 2.150% | 2021 | 4/1/2033 | |
| Farmington PCBs, 2016 Series B | $100,000 | 2.150% | 2021 | 4/1/2033 | |
| Farmington PCBs, 2010 Series B | $37,000 | 3.875% | 2024 | 6/1/2040 | Jun 1 2029 |
| Maricopa PCBs, 2003 Series A | $36,000 | 3.875% | 2024 | 1/1/2038 | Jun 1 2029 |
| Farmington PCBs, 2010 Series D | $130,000 | 3.900% | 2023 | 6/1/2040 | Jun 1 2028 |
| Farmington PCBs, 2010 Series A | $40,045 | 0.875% | 2021 | 6/1/2040 | Oct 1 2026 |
| Maricopa PCBs, 2010 Series A | $39,300 | 0.875% | 2021 | 6/1/2043 | Oct 1 2026 |
| Maricopa PCBs, 2010 Series B | $21,000 | 0.875% | 2021 | 6/1/2043 | Oct 1 2026 |
| Farmington PCBs, 2010 Series C | $65,000 | 3.875% | 2024 | 6/1/2040 | Jun 1 2029 |
| Farmington PCBs, 2010 Series E | $60,000 | 3.875% | 2024 | 6/1/2040 | Jun 1 2029 |
| PNM SUNs, 2015 Series A | $250,000 | 3.850% | 2015 | 8/1/2025 | |
| PNM SUNs, 2018 Series B | $104,000 | 3.450% | 2018 | 5/15/2025[3] | |
| PNM SUNs, 2018 Series C | $88,000 | 3.680% | 2018 | 5/15/2028 | |
| PNM SUNs, 2018 Series D | $15,000 | 3.780% | 2018 | 8/1/2028 | |
| PNM SUNs, 2018 Series E | $38,000 | 3.930% | 2018 | 5/15/2033 | |
| PNM SUNs, 2018 Series F | $45,000 | 4.220% | 2018 | 5/15/2038 | |
| PNM SUNs, 2018 Series G | $20,000 | 4.500% | 2018 | 5/15/2048 | |
| PNM SUNs, 2018 Series H | $85,000 | 4.600% | 2018 | 8/1/2048 | |
| PNM SUNs, 2020 Series A | $150,000 | 3.210% | 2020 | 4/30/2030 | |
| PNM SUNs, 2020 Series B | $50,000 | 3.570% | 2020 | 4/29/2039 | |
| PNM SUNs, 2021 Series A | $80,000 | 2.590% | 2021 | 7/15/2033 | |
| PNM SUNs, 2021 Series B | $80,000 | 3.140% | 2021 | 7/15/2041 | |
| PNM SUNs, December 2021 Series A | $50,000 | 2.290% | 2021 | 12/30/2031 | |
| PNM SUNs, December 2021 Series B | $100,000 | 2.970% | 2021 | 12/30/2041 | |
| PNM SUNs, 2023 Series A | $150,000 | 5.510% | 2023 | 4/28/2035 | |
| PNM SUNs, 2023 Series B | $50,000 | 5.920% | 2023 | 4/28/2053 | |
| **TOTAL** | **$1,929,345[4]** | | | | |

[2] Debt excludes Senior Secured Energy Transition Bonds issued by PNM Energy Transition Bond Company I, LLC.

[3] The PNM SUNs, 2018 Series B were paid off at the Maturity Date.

[4] Total excludes PNM 2025 SUNs Series A in aggregate principal amount of $125,000 and PNM 2025 SUNs Series B in aggregate principal amount of $175,000, each of which were issued on April 23, 2025 and remain outstanding.

**Public Service Company of New Mexico Bank Credit Facilities: Variable Rate Revolvers and Term Loans**

| Credit Facility | Effective Date | Expiration Date | Drawn Credit Facility Pricing | Principal Outstanding 3/31/25; (in $000) | Borrowing Rate as of 3/31/25 |
|---|---|---|---|---|---|
| PNM $400M Revolver | 10/31/2011 | 3/30/2029 (extension option to 3/30/2030) | SOFR+CSAs+125 bps | $258,300 | 5.67% |
| PNM $40M Revolver | 12/12/2017 | 5/20/2026[1] | SOFR+CSA+125 bps | $40,000 | 5.67% |
| PNM $200M Term Loan | 5/10/2024 | 11/10/2025 | SOFR+CSA+90 bps | $200,000 | 5.32% |
| PNM $100M Inter-company Loan Agreement with TXNM | 12/17/2010 | 9/30/25 (renewed annually) | Function of TXNM's Revolver borrowing rate, at the time of borrowing | $1,600 | 5.92% |
| PNM $195M Term Loan | 1/21/2025 | 7/21/2026 | SOFR + CSA + 90 | $195,000 | 5.32% |

[1] On July 25, 2025, the Company extended the expiration date to May 31, 2030.

On May 18, 2025, Parent entered into that certain Agreement and Plan of Merger, dated as of May 18, 2025 (together with the exhibits and disclosure schedules thereto, the "Merger Agreement"), among Troy ParentCo LLC ("Troy Parent"), Troy Merger Sub Inc. ("Merger Sub") and Parent, pursuant to which Merger Sub will be merged with and into Parent, Parent will be the surviving entity in the merger and Parent will become a subsidiary of Troy Parent (the "Merger"). The Merger Agreement imposes restrictions on the incurrence of Indebtedness by the Company.

**Schedule 14.3 to the Note Purchase Agreement**

[FORM OF]

**U.S. TAX COMPLIANCE CERTIFICATE**

Reference is hereby made to that certain Note Purchase Agreement dated as of July 31, 2025 (the **"Note Purchase Agreement"**), among Public Service Company of New Mexico, a New Mexico corporation (the "**Company**"), and the purchaser party thereto. Certain capitalized and other terms used in this Certificate are as defined in the Note Purchase Agreement.

The undersigned hereby certifies that:

(i) it is the sole record and beneficial owner of the Note(s) in respect of which it is providing this certificate;

(ii) it is not a bank within the meaning of Section 881(c)(3)(A) of the Code;

(iii) it is not a ten percent shareholder of the Company within the meaning of Section 871(h)(3)(B) of the Code; and

(iv) it is not a controlled foreign corporation related to the Company as described in Section 881(c)(3)(C) of the Code.

The undersigned has furnished the Company with a certificate of its non-U.S. Person status on IRS W-8BEN-E.

The undersigned understands that this certification may be disclosed to the Internal Revenue Service by the Company and that any false statement contained herein could be punished by fine, imprisonment, or both.

Under penalties of perjury, I declare that I have examined this certification and to the best of my knowledge and belief, it is true, correct and complete, and I further declare that I have authority to sign this document on behalf of the Purchaser.

[Purchaser Name]
By:__
Name:
Title:

Date: _____

**PUBLIC SERVICE COMPANY OF NEW MEXICO**
**414 SILVER AVE. SW**
**ALBUQUERQUE, NEW MEXICO 87102**

**INFORMATION RELATING TO PURCHASERS**

| NAME AND ADDRESS OF PURCHASER | SERIES OF NOTES | PRINCIPAL AMOUNT OF NOTES TO BE PURCHASED |
|---|---|---|

PURCHASER SCHEDULE
(to Note Purchase Agreement)

TXNM Energy, Inc.
414 Silver Ave. SW
Albuquerque, NM 87102-3289

**EXHIBIT 31.1**
**CERTIFICATION**

I, Joseph D. Tarry, certify that:

1. I have reviewed this Quarterly Report on Form 10-Q of TXNM Energy, Inc.;

2. Based on my knowledge, this report does not contain any untrue statement of a material fact or omit to state a material fact necessary to make the statements made, in light of the circumstances under which such statements were made, not misleading with respect to the period covered by this report;

3. Based on my knowledge, the financial statements, and other financial information included in this report, fairly present in all material respects the financial condition, results of operations and cash flows of the registrant as of, and for, the periods presented in this report;

4. The registrant's other certifying officer and I are responsible for establishing and maintaining disclosure controls and procedures (as defined in Exchange Act Rules 13a-15(e) and 15d-15(e)) and internal control over financial reporting (as defined in Exchange Act Rules 13a-15(f) and 15d-15(f)) for the registrant and have:

    a) Designed such disclosure controls and procedures, or caused such disclosure controls and procedures to be designed under our supervision, to ensure that material information relating to the registrant, including its consolidated subsidiaries, is made known to us by others within those entities, particularly during the period in which this report is being prepared;

    b) Designed such internal control over financial reporting, or caused such internal control over financial reporting to be designed under our supervision, to provide reasonable assurance regarding the reliability of financial reporting and the preparation of financial statements for external purposes in accordance with generally accepted accounting principles;

    c) Evaluated the effectiveness of the registrant's disclosure controls and procedures and presented in this report our conclusions about the effectiveness of the disclosure controls and procedures, as of the end of the period covered by this report based on such evaluation; and

    d) Disclosed in this report any change in the registrant's internal control over financial reporting that occurred during the registrant's most recent fiscal quarter (each registrant's fourth fiscal quarter in the case of an annual report) that has materially affected, or is reasonably likely to materially affect, the registrant's internal control over financial reporting; and

5. The registrant's other certifying officer and I have disclosed, based on our most recent evaluation of internal control over financial reporting, to the registrant's auditors and the audit committee of the registrant's board of directors (or persons performing the equivalent functions):

    a) All significant deficiencies and material weaknesses in the design or operation of internal controls over financial reporting which are reasonably likely to adversely affect the registrant's ability to record, process, summarize and report financial information; and

    b) Any fraud, whether or not material, that involves management or other employees who have a significant role in the registrant's internal control over financial reporting.

Date: August 1, 2025

By: /s/ Joseph D. Tarry
Joseph D. Tarry
President and Chief Executive Officer
TXNM Energy, Inc.

TXNM Energy, Inc.
414 Silver Ave. SW
Albuquerque, NM 87102-3289

**EXHIBIT 31.2**
**CERTIFICATION**

I, Henry E. Monroy, certify that:

1. I have reviewed this Quarterly Report on Form 10-Q of TXNM Energy, Inc.;

2. Based on my knowledge, this report does not contain any untrue statement of a material fact or omit to state a material fact necessary to make the statements made, in light of the circumstances under which such statements were made, not misleading with respect to the period covered by this report;

3. Based on my knowledge, the financial statements, and other financial information included in this report, fairly present in all material respects the financial condition, results of operations and cash flows of the registrant as of, and for, the periods presented in this report;

4. The registrant's other certifying officer and I are responsible for establishing and maintaining disclosure controls and procedures (as defined in Exchange Act Rules 13a-15(e) and 15d-15(e)) and internal control over financial reporting (as defined in Exchange Act Rules 13a-15(f) and 15d-15(f)) for the registrant and have:

    a) Designed such disclosure controls and procedures, or caused such disclosure controls and procedures to be designed under our supervision, to ensure that material information relating to the registrant, including its consolidated subsidiaries, is made known to us by others within those entities, particularly during the period in which this report is being prepared;

    b) Designed such internal control over financial reporting, or caused such internal control over financial reporting to be designed under our supervision, to provide reasonable assurance regarding the reliability of financial reporting and the preparation of financial statements for external purposes in accordance with generally accepted accounting principles;

    c) Evaluated the effectiveness of the registrant's disclosure controls and procedures and presented in this report our conclusions about the effectiveness of the disclosure controls and procedures, as of the end of the period covered by this report based on such evaluation; and

    d) Disclosed in this report any change in the registrant's internal control over financial reporting that occurred during the registrant's most recent fiscal quarter (each registrant's fourth fiscal quarter in the case of an annual report) that has materially affected, or is reasonably likely to materially affect, the registrant's internal control over financial reporting; and

5. The registrant's other certifying officer and I have disclosed, based on our most recent evaluation of internal control over financial reporting, to the registrant's auditors and the audit committee of the registrant's board of directors (or persons performing the equivalent functions):

    a) All significant deficiencies and material weaknesses in the design or operation of internal controls over financial reporting which are reasonably likely to adversely affect the registrant's ability to record, process, summarize and report financial information; and

    b) Any fraud, whether or not material, that involves management or other employees who have a significant role in the registrant's internal control over financial reporting.

Date: August 1, 2025

By: /s/ Henry E. Monroy
Henry E. Monroy
Senior Vice President and Chief Financial Officer
TXNM Energy, Inc.

Public Service Company of New Mexico
414 Silver Ave. SW
Albuquerque, NM 87102-3289

**EXHIBIT 31.3**
**CERTIFICATION**

I, Joseph D. Tarry, certify that:

1. I have reviewed this Quarterly Report on Form 10-Q of Public Service Company of New Mexico;

2. Based on my knowledge, this report does not contain any untrue statement of a material fact or omit to state a material fact necessary to make the statements made, in light of the circumstances under which such statements were made, not misleading with respect to the period covered by this report;

3. Based on my knowledge, the financial statements, and other financial information included in this report, fairly present in all material respects the financial condition, results of operations and cash flows of the registrant as of, and for, the periods presented in this report;

4. The registrant's other certifying officer and I are responsible for establishing and maintaining disclosure controls and procedures (as defined in Exchange Act Rules 13a-15(e) and 15d-15(e)) and internal control over financial reporting (as defined in Exchange Act Rules 13a-15(f) and 15d-15(f)) for the registrant and have:

    a) Designed such disclosure controls and procedures, or caused such disclosure controls and procedures to be designed under our supervision, to ensure that material information relating to the registrant, including its consolidated subsidiaries, is made known to us by others within those entities, particularly during the period in which this report is being prepared;

    b) Designed such internal control over financial reporting, or caused such internal control over financial reporting to be designed under our supervision, to provide reasonable assurance regarding the reliability of financial reporting and the preparation of financial statements for external purposes in accordance with generally accepted accounting principles;

    c) Evaluated the effectiveness of the registrant's disclosure controls and procedures and presented in this report our conclusions about the effectiveness of the disclosure controls and procedures, as of the end of the period covered by this report based on such evaluation; and

    d) Disclosed in this report any change in the registrant's internal control over financial reporting that occurred during the registrant's most recent fiscal quarter (each registrant's fourth fiscal quarter in the case of an annual report) that has materially affected, or is reasonably likely to materially affect, the registrant's internal control over financial reporting; and

5. The registrant's other certifying officer and I have disclosed, based on our most recent evaluation of internal control over financial reporting, to the registrant's auditors and the audit committee of the registrant's board of directors (or persons performing the equivalent functions):

    a) All significant deficiencies and material weaknesses in the design or operation of internal controls over financial reporting which are reasonably likely to adversely affect the registrant's ability to record, process, summarize and report financial information; and

    b) Any fraud, whether or not material, that involves management or other employees who have a significant role in the registrant's internal control over financial reporting.

Date: August 1, 2025

By: /s/ Joseph D. Tarry

Joseph D. Tarry
President and Chief Executive Officer
Public Service Company of New Mexico

Public Service Company of New Mexico
414 Silver Ave. SW
Albuquerque, NM 87102-3289

**EXHIBIT 31.4**
**CERTIFICATION**

I, Henry E. Monroy, certify that:

1. I have reviewed this Quarterly Report on Form 10-Q of Public Service Company of New Mexico;

2. Based on my knowledge, this report does not contain any untrue statement of a material fact or omit to state a material fact necessary to make the statements made, in light of the circumstances under which such statements were made, not misleading with respect to the period covered by this report;

3. Based on my knowledge, the financial statements, and other financial information included in this report, fairly present in all material respects the financial condition, results of operations and cash flows of the registrant as of, and for, the periods presented in this report;

4. The registrant's other certifying officer and I are responsible for establishing and maintaining disclosure controls and procedures (as defined in Exchange Act Rules 13a-15(e) and 15d-15(e)) and internal control over financial reporting (as defined in Exchange Act Rules 13a-15(f) and 15d-15(f)) for the registrant and have:

    a) Designed such disclosure controls and procedures, or caused such disclosure controls and procedures to be designed under our supervision, to ensure that material information relating to the registrant, including its consolidated subsidiaries, is made known to us by others within those entities, particularly during the period in which this report is being prepared;

    b) Designed such internal control over financial reporting, or caused such internal control over financial reporting to be designed under our supervision, to provide reasonable assurance regarding the reliability of financial reporting and the preparation of financial statements for external purposes in accordance with generally accepted accounting principles;

    c) Evaluated the effectiveness of the registrant's disclosure controls and procedures and presented in this report our conclusions about the effectiveness of the disclosure controls and procedures, as of the end of the period covered by this report based on such evaluation; and

    d) Disclosed in this report any change in the registrant's internal control over financial reporting that occurred during the registrant's most recent fiscal quarter (each registrant's fourth fiscal quarter in the case of an annual report) that has materially affected, or is reasonably likely to materially affect, the registrant's internal control over financial reporting; and

5. The registrant's other certifying officer and I have disclosed, based on our most recent evaluation of internal control over financial reporting, to the registrant's auditors and the audit committee of the registrant's board of directors (or persons performing the equivalent functions):

    a) All significant deficiencies and material weaknesses in the design or operation of internal controls over financial reporting which are reasonably likely to adversely affect the registrant's ability to record, process, summarize and report financial information; and

    b) Any fraud, whether or not material, that involves management or other employees who have a significant role in the registrant's internal control over financial reporting.

Date: August 1, 2025

By: /s/ Henry E. Monroy
Henry E. Monroy
Senior Vice President and Chief Financial Officer

Public Service Company of New Mexico

Texas-New Mexico Power Company
577 N. Garden Ridge Blvd.
Lewisville, Texas 75067

**EXHIBIT 31.5**
**CERTIFICATION**

I, Joseph D. Tarry, certify that:

1. I have reviewed this Quarterly Report on Form 10-Q of Texas-New Mexico Power Company;

2. Based on my knowledge, this report does not contain any untrue statement of a material fact or omit to state a material fact necessary to make the statements made, in light of the circumstances under which such statements were made, not misleading with respect to the period covered by this report;

3. Based on my knowledge, the financial statements, and other financial information included in this report, fairly present in all material respects the financial condition, results of operations and cash flows of the registrant as of, and for, the periods presented in this report;

4. The registrant's other certifying officer and I are responsible for establishing and maintaining disclosure controls and procedures (as defined in Exchange Act Rules 13a-15(e) and 15d-15(e)) and internal control over financial reporting (as defined in Exchange Act Rules 13a-15(f) and 15d-15(f)) for the registrant and have:

    a) Designed such disclosure controls and procedures, or caused such disclosure controls and procedures to be designed under our supervision, to ensure that material information relating to the registrant, including its consolidated subsidiaries, is made known to us by others within those entities, particularly during the period in which this report is being prepared;

    b) Designed such internal control over financial reporting, or caused such internal control over financial reporting to be designed under our supervision, to provide reasonable assurance regarding the reliability of financial reporting and the preparation of financial statements for external purposes in accordance with generally accepted accounting principles;

    c) Evaluated the effectiveness of the registrant's disclosure controls and procedures and presented in this report our conclusions about the effectiveness of the disclosure controls and procedures, as of the end of the period covered by this report based on such evaluation; and

    d) Disclosed in this report any change in the registrant's internal control over financial reporting that occurred during the registrant's most recent fiscal quarter (each registrant's fourth fiscal quarter in the case of an annual report) that has materially affected, or is reasonably likely to materially affect, the registrant's internal control over financial reporting; and

5. The registrant's other certifying officer and I have disclosed, based on our most recent evaluation of internal control over financial reporting, to the registrant's auditors and the audit committee of the registrant's board of directors (or persons performing the equivalent functions):

    a) All significant deficiencies and material weaknesses in the design or operation of internal controls over financial reporting which are reasonably likely to adversely affect the registrant's ability to record, process, summarize and report financial information; and

    b) Any fraud, whether or not material, that involves management or other employees who have a significant role in the registrant's internal control over financial reporting.

Date: August 1, 2025

By: /s/ Joseph D. Tarry

Joseph D. Tarry
Chief Executive Officer
Texas-New Mexico Power Company

Texas-New Mexico Power Company
577 N. Garden Ridge Blvd.
Lewisville, Texas 75067

**EXHIBIT 31.6**
**CERTIFICATION**

I, Henry E. Monroy, certify that:

1. I have reviewed this Quarterly Report on Form 10-Q of Texas-New Mexico Power Company;

2. Based on my knowledge, this report does not contain any untrue statement of a material fact or omit to state a material fact necessary to make the statements made, in light of the circumstances under which such statements were made, not misleading with respect to the period covered by this report;

3. Based on my knowledge, the financial statements, and other financial information included in this report, fairly present in all material respects the financial condition, results of operations and cash flows of the registrant as of, and for, the periods presented in this report;

4. The registrant's other certifying officer and I are responsible for establishing and maintaining disclosure controls and procedures (as defined in Exchange Act Rules 13a-15(e) and 15d-15(e)) and internal control over financial reporting (as defined in Exchange Act Rules 13a-15(f) and 15d-15(f)) for the registrant and have:

    a) Designed such disclosure controls and procedures, or caused such disclosure controls and procedures to be designed under our supervision, to ensure that material information relating to the registrant, including its consolidated subsidiaries, is made known to us by others within those entities, particularly during the period in which this report is being prepared;

    b) Designed such internal control over financial reporting, or caused such internal control over financial reporting to be designed under our supervision, to provide reasonable assurance regarding the reliability of financial reporting and the preparation of financial statements for external purposes in accordance with generally accepted accounting principles;

    c) Evaluated the effectiveness of the registrant's disclosure controls and procedures and presented in this report our conclusions about the effectiveness of the disclosure controls and procedures, as of the end of the period covered by this report based on such evaluation; and

    d) Disclosed in this report any change in the registrant's internal control over financial reporting that occurred during the registrant's most recent fiscal quarter (each registrant's fourth fiscal quarter in the case of an annual report) that has materially affected, or is reasonably likely to materially affect, the registrant's internal control over financial reporting; and

5. The registrant's other certifying officer and I have disclosed, based on our most recent evaluation of internal control over financial reporting, to the registrant's auditors and the audit committee of the registrant's board of directors (or persons performing the equivalent functions):

    a) All significant deficiencies and material weaknesses in the design or operation of internal controls over financial reporting which are reasonably likely to adversely affect the registrant's ability to record, process, summarize and report financial information; and

    b) Any fraud, whether or not material, that involves management or other employees who have a significant role in the registrant's internal control over financial reporting.

Date: August 1, 2025

By: /s/ Henry E. Monroy
Henry E. Monroy
Senior Vice President and Chief Financial Officer
Texas-New Mexico Power Company

TXNM Energy, Inc.
414 Silver Ave. SW
Albuquerque, NM 87102-3289
www.txnmenergy.com

**EXHIBIT 32.1**

**CERTIFICATION PURSUANT TO 18 U.S.C. § 1350, AS ADOPTED PURSUANT TO § 906 OF THE SARBANES-OXLEY ACT OF 2002**

In connection with the Quarterly Report on Form 10-Q for the period ended June 30, 2025, for TXNM Energy, Inc. ("Company"), as filed with the Securities and Exchange Commission on August 1, 2025 ("Report"), each of the undersigned officers of the Company certifies, pursuant to 18 U.S.C. §1350, as adopted pursuant to § 906 of the Sarbanes-Oxley Act of 2002, that:

(1) the Report fully complies with the requirements of § 13(a) or 15(d) of the Securities Exchange Act of 1934, as amended; and
(2) the information contained in the Report fairly presents, in all material respects, the financial condition and results of operations of the Company.

Date: August 1, 2025

By: /s/ Joseph D. Tarry
Joseph D. Tarry
President and Chief Executive Officer
TXNM Energy, Inc.

By: /s/ Henry E. Monroy
Henry E. Monroy
Senior Vice President and Chief Financial Officer
TXNM Energy, Inc.

Public Service Company of New Mexico
414 Silver Ave. SW
Albuquerque, NM 87102-3289

**EXHIBIT 32.2**

**CERTIFICATION PURSUANT TO 18 U.S.C. § 1350, AS ADOPTED PURSUANT TO § 906 OF THE SARBANES-OXLEY ACT OF 2002**

In connection with the Quarterly Report on Form 10-Q for the period ended June 30, 2025, for Public Service Company of New Mexico ("Company"), as filed with the Securities and Exchange Commission on August 1, 2025 ("Report"), each of the undersigned officers of the Company certifies, pursuant to 18 U.S.C. §1350, as adopted pursuant to § 906 of the Sarbanes-Oxley Act of 2002, that:

(1) the Report fully complies with the requirements of § 13(a) or 15(d) of the Securities Exchange Act of 1934, as amended; and
(2) the information contained in the Report fairly presents, in all material respects, the financial condition and results of operations of the Company.

Date: August 1, 2025

By: /s/ Joseph D. Tarry
Joseph D. Tarry
President and Chief Executive Officer
Public Service Company of New Mexico

By: /s/ Henry E. Monroy
Henry E. Monroy
Senior Vice President and Chief Financial Officer
Public Service Company of New Mexico

Texas-New Mexico Power Company
577 N. Garden Ridge Blvd.
Lewisville, Texas 75067

**EXHIBIT 32.3**

**CERTIFICATION PURSUANT TO 18 U.S.C. § 1350, AS ADOPTED PURSUANT TO § 906 OF THE SARBANES-OXLEY ACT OF 2002**

In connection with the Quarterly Report on Form 10-Q for the period ended June 30, 2025, for Texas-New Mexico Power Company ("Company"), as filed with the Securities and Exchange Commission on August 1, 2025 ("Report"), each of the undersigned officers of the Company certifies, pursuant to 18 U.S.C. §1350, as adopted pursuant to §906 of the Sarbanes-Oxley Act of 2002, that:

(1) the Report fully complies with the requirements of § 13(a) or 15(d) of the Securities Exchange Act of 1934, as amended; and
(2) the information contained in the Report fairly presents, in all material respects, the financial condition and results of operations of the Company.

Date: August 1, 2025

By: /s/ Joseph D. Tarry
Joseph D. Tarry
Chief Executive Officer
Texas-New Mexico Power Company

By: /s/ Henry E. Monroy
Henry E. Monroy
Senior Vice President and Chief Financial Officer
Texas-New Mexico Power Company

Schedule Q-4 Reports to the Securities and Exchange Commission

# March 31, 2025

Attachments to this document are available to the public and can be found at *https://www.txnmenergy.com/investors/financial-information/sec-filings.aspx* or can be retrieved from the NMPRC Records website.

Table of Contents

**UNITED STATES**
**SECURITIES AND EXCHANGE COMMISSION**
Washington, D.C. 20549

**FORM 10-Q**

(Mark One)

☒ QUARTERLY REPORT PURSUANT TO SECTION 13 OR 15(d) OF THE SECURITIES EXCHANGE ACT OF 1934

**For the quarterly period ended March 31, 2025**

☐ TRANSITION REPORT PURSUANT TO SECTION 13 OR 15(d) OF THE SECURITIES EXCHANGE ACT OF 1934

**For the transition period from _____ to _____**

Name of Registrant, State of Incorporation, Address Of Principal Executive Offices, Telephone Number, Commission File No., IRS Employer Identification No.

**TXNM Energy, Inc.**
(A New Mexico Corporation)
414 Silver Ave. SW
Albuquerque, New Mexico 87102-3289
Telephone Number - (505) 241-2700
Commission File No. - 001-32462
IRS Employer Identification No. - 85-0468296

**Public Service Company of New Mexico**
(A New Mexico Corporation)
414 Silver Ave. SW
Albuquerque, New Mexico 87102-3289
Telephone Number - (505) 241-2700
Commission File No. - 001-06986
IRS Employer Identification No. - 85-0019030

**Texas-New Mexico Power Company**
(A Texas Corporation)
577 N. Garden Ridge Blvd.
Lewisville, Texas 75067
Telephone Number - (972) 420-4189
Commission File No. - 002-97230
IRS Employer Identification No. - 75-0204070

---

Securities registered pursuant to Section 12(b) of the Act:

| Registrant | Title of each class | Trading Symbol(s) | Name of exchange on which registered |
|---|---|---|---|
| TXNM Energy, Inc. | Common Stock, no par value | TXNM | New York Stock Exchange |

Indicate by check mark whether each registrant (1) has filed all reports required to be filed by Section 13 or 15(d) of the Securities Exchange Act of 1934 during the preceding 12 months (or for such shorter period that the registrant was required to file such reports), and (2) has been subject to such filing requirements for the past 90 days.

| | | | | |
|---|---|---|---|---|
| TXNM Energy, Inc. (“TXNM”) | Yes | ☑ | No | ☐ |
| Public Service Company of New Mexico (“PNM”) | Yes | ☑ | No | ☐ |
| Texas-New Mexico Power Company (“TNMP”) | Yes | ☐ | No | ☑ |

(NOTE: As a voluntary filer, not subject to the filing requirements, TNMP filed all reports under Section 13 or 15(d) of the Securities Exchange Act of 1934 during the preceding 12 months.)

Table of Contents

Indicate by check mark whether each registrant has submitted electronically every Interactive Data File required to be submitted pursuant to Rule 405 of Regulation S-T during the preceding 12 months (or for such shorter period that the registrant was required to submit such files).

| | | | | |
|---|---|---|---|---|
| TXNM | Yes | ☑ | No | ☐ |
| PNM | Yes | ☑ | No | ☐ |
| TNMP | Yes | ☑ | No | ☐ |

Indicate by check mark whether registrant is a large accelerated filer, an accelerated filer, a non-accelerated filer, smaller reporting company, or an emerging growth company. See the definitions of "large accelerated filer," "accelerated filer," "smaller reporting company," and "emerging growth company" in Rule 12b-2 of the Exchange Act.

| | Large accelerated filer | Accelerated filer | Non-accelerated filer | Smaller reporting company | Emerging growth company |
|---|---|---|---|---|---|
| TXNM | ☑ | ☐ | ☐ | ☐ | ☐ |
| | Large accelerated filer | Accelerated filer | Non-accelerated filer | Smaller reporting company | Emerging growth company |
| PNM | ☐ | ☐ | ☑ | ☐ | ☐ |
| | Large accelerated filer | Accelerated filer | Non-accelerated filer | Smaller reporting company | Emerging growth company |
| TNMP | ☐ | ☐ | ☑ | ☐ | ☐ |

If an emerging growth company, indicate by check mark if the registrant has elected not to use the extended transition period for complying with any new or revised financial accounting standards provided pursuant to Section 13(a) of the Exchange Act. ☐

Indicate by check mark whether any of the registrants is a shell company (as defined in Rule 12b-2 of the Exchange Act). Yes ☐ No ☑

As of April 25, 2025, 92,659,335 shares of common stock, no par value per share, of TXNM were outstanding.

The total number of shares of common stock of PNM, no par value per share, outstanding as of April 25, 2025, was 39,117,799 all held by TXNM (and none held by non-affiliates).

The total number of shares of common stock of TNMP, $10 par value per share, outstanding as of April 25, 2025, was 6,358 all held indirectly by TXNM (and none held by non-affiliates).

**PNM AND TNMP MEET THE CONDITIONS SET FORTH IN GENERAL INSTRUCTIONS (H) (1) (a) AND (b) OF FORM 10-Q AND ARE THEREFORE FILING THIS FORM WITH THE REDUCED DISCLOSURE FORMAT PURSUANT TO GENERAL INSTRUCTION (H) (2).**

This combined Form 10-Q is separately filed by TXNM, PNM, and TNMP. Information contained herein relating to any individual registrant is filed by such registrant on its own behalf. Each registrant makes no representation as to information relating to the other registrants. When this Form 10-Q is incorporated by reference into any filing with the SEC made by TXNM, PNM, or TNMP, as a registrant, the portions of this Form 10-Q that relate to each other registrant are not incorporated by reference therein.

Table of Contents

**TXNM ENERGY, INC. AND SUBSIDIARIES**
**PUBLIC SERVICE COMPANY OF NEW MEXICO AND SUBSIDIARIES**
**TEXAS-NEW MEXICO POWER COMPANY AND SUBSIDIARIES**

**INDEX**


| | Page No. |
|---|---|
| **GLOSSARY** | 4 |
| **PART I. FINANCIAL INFORMATION** | |
| **ITEM 1. FINANCIAL STATEMENTS (UNAUDITED)** | |
| **TXNM ENERGY, INC. AND SUBSIDIARIES** | |
| Condensed Consolidated Statements of Earnings | 7 |
| Condensed Consolidated Statements of Comprehensive Income | 8 |
| Condensed Consolidated Statements of Cash Flows | 9 |
| Condensed Consolidated Balance Sheets | 11 |
| Condensed Consolidated Statements of Changes in Equity | 13 |
| **PUBLIC SERVICE COMPANY OF NEW MEXICO AND SUBSIDIARIES** | |
| Condensed Consolidated Statements of Earnings | 14 |
| Condensed Consolidated Statements of Comprehensive Income | 15 |
| Condensed Consolidated Statements of Cash Flows | 16 |
| Condensed Consolidated Balance Sheets | 18 |
| Condensed Consolidated Statements of Changes in Equity | 20 |
| **TEXAS-NEW MEXICO POWER COMPANY AND SUBSIDIARIES** | |
| Condensed Consolidated Statements of Earnings | 21 |
| Condensed Consolidated Statements of Cash Flows | 22 |
| Condensed Consolidated Balance Sheets | 23 |
| Condensed Consolidated Statements of Changes in Common Stockholder's Equity | 25 |
| **NOTES TO CONDENSED CONSOLIDATED FINANCIAL STATEMENTS** | 26 |
| **ITEM 2. MANAGEMENT'S DISCUSSION AND ANALYSIS OF FINANCIAL CONDITION AND RESULTS OF OPERATIONS** | 66 |
| **ITEM 3. QUANTITATIVE AND QUALITATIVE DISCLOSURES ABOUT MARKET RISK** | 93 |
| **ITEM 4. CONTROLS AND PROCEDURES** | 95 |
| **PART II. OTHER INFORMATION** | |
| **ITEM 1. LEGAL PROCEEDINGS** | 96 |
| **ITEM 1A. RISK FACTORS** | 96 |
| **ITEM 5. OTHER INFORMATION** | 96 |
| **ITEM 6. EXHIBITS** | 96 |
| **SIGNATURE** | 98 |

Table of Contents

## GLOSSARY

Definitions:

| | |
|---|---|
| 2024 Rate Change | PNM's request for a general increase in electric rates filed with the NMPRC on December 5, 2022 using a calendar year 2024 FTY |
| 2025 Rate Request | PNM's request for a general increase in electric rates filed with the NMPRC on June 14, 2024 using a FTY beginning July 1, 2025 |
| 2028 Resource Application | PNM's November 22, 2024 application with the NMPRC for approval of resources to be available for the 2028 summer peak |
| ABCWUA | Albuquerque Bernalillo County Water Utility Authority |
| ACE Rule | Affordable Clean Energy Rule |
| AEP OnSite Partners | AEP OnSite Partners, LLC, a subsidiary of American Electric Power, Inc. until the completion of its sale on September 30, 2024 to Basalt Infrastructure Partners LLC |
| AFUDC | Allowance for Funds Used During Construction |
| AOCI | Accumulated Other Comprehensive Income |
| APS | Arizona Public Service Company, the operator and a co-owner of PVNGS and Four Corners |
| ARO | Asset Retirement Obligation |
| ASU | Accounting Standards Update |
| Board | Board of Directors of TXNM |
| BSER | Best system of emission reduction technology |
| CAA | Clean Air Act |
| Carbon Pollution Standards | Carbon Pollution Standards established by the EPA on August 3, 2015 |
| CCN | Certificate of Convenience and Necessity |
| CCR | Coal Combustion Residuals |
| CCS | Carbon Capture and Storage/Sequestration |
| $CO_2$ | Carbon Dioxide |
| CODM | Chief Operating Decision Maker |
| Community Solar Act | Senate Bill 84 effective June 18, 2021 |
| CSA | Coal Supply Agreement |
| CWIP | Construction Work in Progress |
| DC Circuit | United States Court of Appeals for the District of Columbia Circuit |
| DCRF | TNMP's applications for a distribution cost recovery factor |
| DOE | United States Department of Energy |
| EEI | Edison Electric Institute, an association representing all US investor-owned electric companies |
| EIM | Western Energy Imbalance Market developed and operated by CAISO |
| ELG | Effluent Limitation Guidelines |
| Energy Transition Charge(s) | Rate rider established to collect non-bypassable customer charges for repayment of the ETBC I Securitized Bonds |
| EPA | United States Environmental Protection Agency |
| ERCOT | Electric Reliability Council of Texas |
| ESA | Energy Storage Agreement |
| ETA | The New Mexico Energy Transition Act |
| ETBC I | PNM Energy Transition Bond Company I, LLC, formed on August 25, 2023 |
| ETBC I Securitized Bonds | On November 15, 2023, ETBC I issued $343.2 million aggregate principal amount of its senior secured energy transition bonds, Series A in two tranches |
| EUEA | The New Mexico Efficient Use of Energy Act |
| EV | Electric Vehicle |
| Exchange Act | Securities Exchange Act of 1934 |
| FASB | Financial Accounting Standards Board |
| FERC | Federal Energy Regulatory Commission |
| FIP | Federal Implementation Plan |
| Four Corners | Four Corners Power Plant |
| Four Corners CSA | Four Corners' coal supply contract with NTEC |
| FPPAC | Fuel and Purchased Power Adjustment Clause |
| FTY | Future Test Year |
| GAAP | Generally Accepted Accounting Principles in the United States of America |
| GHG | Greenhouse Gas Emissions |
| Grid Modernization Plan | PNM's NMPRC approved plan for grid modernization that includes investments of approximately $344 million for the first six years of a broader 11-year strategy |
| GWh | Gigawatt hours |
| INDC | Intended Nationally Determined Contribution |

Table of Contents

| | |
|---|---|
| IRA | Inflation Reduction Act |
| IRP | Integrated Resource Plan |
| IRS | Internal Revenue Service |
| ISFSI | Independent Spent Fuel Storage Installation |
| kV | Kilovolt |
| KW | Kilowatt |
| KWh | Kilowatt Hour |
| La Joya Wind II | La Joya Wind Facility generating 140 MW of output |
| Lightning Dock Geothermal | Lightning Dock geothermal power facility, also known as the Dale Burgett Geothermal Plant |
| MD&A | Management's Discussion and Analysis of Financial Condition and Results of Operations |
| Merger | The merger of TXNM pursuant to the Merger Agreement, with TXNM surviving the Merger as a direct, wholly-owned subsidiary of Avangrid (Subsequently terminated December 31, 2023) |
| Merger Agreement | The Agreement and Plan of Merger, dated October 20, 2020 (Subsequently terminated December 31, 2023) |
| Meta | Meta Platform, Inc., formerly known as Facebook Inc. |
| MMBTU | Million British Thermal Units |
| Moody's | Moody's Investor Services, Inc. |
| MW | Megawatt |
| MWh | Megawatt Hour |
| NAAQS | National Ambient Air Quality Standards |
| NDT | Nuclear Decommissioning Trusts for PVNGS |
| NEE | New Energy Economy |
| New Mexico Wind | New Mexico Wind Energy Center |
| NM 2015 Rate Case | Request for a General Increase in Electric Rates Field by PNM on August 27, 2015 |
| NM 2016 Rate Case | Request for a General Increase in Electric Rates Filed by PNM on December 7, 2016 |
| NM Supreme Court | New Mexico Supreme Court |
| NMED | New Mexico Environment Department |
| NMMMD | The Mining and Minerals Division of the New Mexico Energy, Minerals and Natural Resources Department |
| NMPRC | New Mexico Public Regulation Commission |
| NMRD | NM Renewable Development, LLC, previously owned 50% each by PNMR Development and AEP OnSite Partners, LLC |
| NOx | Nitrogen Oxides |
| NPDES | National Pollutant Discharge Elimination System |
| NRC | United States Nuclear Regulatory Commission |
| OCI | Other Comprehensive Income |
| OMB | Office of Management and Budget |
| OPEB | Other Post-Employment Benefits |
| OSM | United States Office of Surface Mining Reclamation and Enforcement |
| Paris Agreement | A legally binding international treaty on climate change adopted on December 12, 2015 |
| Pattern Wind | Pattern New Mexico Wind, LLC, an affiliate of Western Spirit and Pattern Development |
| PCRBs | Pollution Control Revenue Bonds |
| PM | Particulate Matter |
| PNM | Public Service Company of New Mexico and Subsidiaries |
| PNM New Mexico Credit Facility | PNM's $40.0 million Unsecured Revolving Credit Facility |
| PNM 2024 Term Loan | PNM's $200.0 million term loan that matures on November 10, 2025 |
| PNM 2025 Term Loan | PNM's $195 Million Unsecured Term Loan issued on January 21, 2025 |
| PNM 2025 Note Purchase Agreement | PNM's agreement for sale of PNM's 2025 SUNs |
| PNM 2025 SUNs | PNM's $300.0 million Senior Unsecured Notes issued on April 23, 2025 |
| PNM Revolving Credit Facility | PNM's $400.0 million Unsecured Revolving Credit Facility |
| PNMR Development | PNMR Development and Management Company, an unregulated wholly-owned subsidiary of TXNM |
| PPA | Power Purchase Agreement |
| PUCT | Public Utility Commission of Texas |
| PV | Photovoltaic |
| PVNGS | Palo Verde Nuclear Generating Station |
| RCT | Reasonable Cost Threshold |

Table of Contents

| | |
|---|---|
| RD | Recommended Decision |
| REA | New Mexico's Renewable Energy Act of 2004 |
| RECs | Renewable Energy Certificates |
| Red Mesa Wind | Red Mesa Wind Energy Center |
| REP | Retail Electricity Provider |
| RFP | Request for Proposal |
| Rio Bravo | Rio Bravo Generating Station |
| ROE | Return on Equity |
| RPS | Renewable Energy Portfolio Standard |
| S&P | Standard and Poor's Ratings Services |
| SEC | United States Securities and Exchange Commission |
| Securities Act | Securities Act of 1933, as amended |
| Securitized Bonds | Energy transition bonds |
| SIP | State Implementation Plan |
| SJGS | San Juan Generating Station |
| SJGS Abandonment Application | PNM's July 1, 2019 consolidated application seeking NMPRC approval to retire PNM's share of SJGS in 2022, for related replacement generating resources, and for the issuance of securitized bonds under the ETA |
| SJGS CSA | San Juan Generating Station Coal Supply Agreement |
| $SO_2$ | Sulfur Dioxide |
| SRP | TNMP's System Resiliency Plan |
| SUNs | Senior Unsecured Notes |
| Tax Act | Federal tax reform legislation enacted on December 22, 2017, commonly referred to as the Tax Cuts and Jobs Act |
| TCOS | Transmission Cost of Service |
| TEP | Transportation Electrification Program |
| TNMP | Texas-New Mexico Power Company and Subsidiaries |
| TNMP 2018 Rate Case | TNMP's General Rate Case Application filed on May 30, 2018 |
| TNMP 2024 Bonds | TNMP's First Mortgage Bonds to be issued under the TNMP 2024 Bond Purchase Agreement |
| TNMP 2024 Bond Purchase Agreement | TNMP's Agreement for the sale of an aggregate $285.0 million of TNMP's 2024 Bonds |
| TNMP 2025 Bonds | TNMP's First Mortgage Bonds to be issued under the TNMP 2025 Bond Purchase Agreement |
| TNMP 2025 Bond Purchase Agreement | TNMP's Agreement for the sale of an aggregate $140.0 Million of TNMP's 2025 Bonds |
| TNMP Revolving Credit Facility | TNMP's $200.0 million Secured Revolving Credit Facility |
| TXNM | TXNM Energy, Inc. formerly known as PNM Resources, Inc. ("PNMR") |
| TXNM 2021 Delayed-Draw Term Loan | TXNM's $1.0 billion Unsecured Delayed-Draw Term Loan that matures on May 18, 2025 |
| TXNM 2023 Term Loan | TXNM's $500.0 million term loan that matures on June 30, 2026 |
| TXNM Revolving Credit Facility | TXNM's $300.0 million Unsecured Revolving Credit Facility |
| U.S. | The Unites States of America |
| U.S. Supreme Court | United States Supreme Court |
| Valencia | Valencia Energy Facility |
| VIE | Variable Interest Entity |
| Western Spirit Line | An approximately 150-mile 345-kV transmission line |
| Westmoreland | Westmoreland Coal Company |
| WFB LOC Facility | Letter of credit arrangements with Wells Fargo Bank, N.A., entered into in August 2020 |
| WRAP | Western Resource Adequacy Program |
| WSJ LLC | Westmoreland San Juan, LLC, a subsidiary of Westmoreland Mining Holdings, LLC, and current owner of SJCC |

Table of Contents

**PART I. FINANCIAL INFORMATION**

**ITEM 1. FINANCIAL STATEMENTS**

**TXNM ENERGY, INC. AND SUBSIDIARIES**
**CONDENSED CONSOLIDATED STATEMENTS OF EARNINGS**
(Unaudited)

| | Three Months Ended March 31, | |
|---|---|---|
| | **2025** | **2024** |
| | (In thousands, except per share amounts) | |
| **Electric Operating Revenues** | $ 482,792 | $ 436,877 |
| **Operating Expenses:** | | |
| Cost of energy | 169,182 | 132,304 |
| Administrative and general | 60,769 | 55,427 |
| Energy production costs | 24,546 | 22,212 |
| Regulatory disallowances | — | 4,459 |
| Depreciation and amortization | 104,551 | 93,187 |
| Transmission and distribution costs | 25,505 | 22,764 |
| Taxes other than income taxes | 26,350 | 25,934 |
| Total operating expenses | 410,903 | 356,287 |
| Operating income | 71,889 | 80,590 |
| **Other Income and Deductions:** | | |
| Interest income | 4,247 | 4,580 |
| Gains (losses) on investment securities | (1,241) | 17,998 |
| Other income | 4,729 | 4,911 |
| Other (deductions) | (2,258) | (16,522) |
| Net other income and deductions | 5,477 | 10,967 |
| **Interest Charges** | 63,551 | 53,762 |
| **Earnings before Income Taxes** | 13,815 | 37,795 |
| **Income Taxes (Benefits)** | 1,018 | (12,571) |
| **Net Earnings** | 12,797 | 50,366 |
| **(Earnings) Attributable to Valencia Non-controlling Interest** | (3,742) | (3,044) |
| **Preferred Stock Dividend Requirements of Subsidiary** | (132) | (132) |
| **Net Earnings Attributable to TXNM** | $ 8,923 | $ 47,190 |
| **Net Earnings Attributable to TXNM per Common Share:** | | |
| Basic | $ 0.10 | $ 0.52 |
| Diluted | $ 0.10 | $ 0.52 |
| **Dividends Declared per Common Share** | $ 0.4075 | $ 0.3875 |

The accompanying notes, as they relate to TXNM, are an integral part of these condensed consolidated financial statements.

Table of Contents

**TXNM ENERGY, INC. AND SUBSIDIARIES**
**CONDENSED CONSOLIDATED STATEMENTS OF COMPREHENSIVE INCOME**
(Unaudited)

| | Three Months Ended March 31, | |
|---|---|---|
| | **2025** | **2024** |
| | (In thousands) | |
| **Net Earnings** | $ 12,797 | $ 50,366 |
| **Other Comprehensive Income:** | | |
| **Unrealized Gains on Available-for-Sale Debt Securities**: | | |
| Net increase in unrealized holding gains arising during the period, net of income tax (expense) benefit of $(68) and $(125) | 199 | 366 |
| Reclassification adjustment for (gains) included in net earnings, net of income tax expense of $35 and $2,771 | (102) | (8,139) |
| **Pension Liability Adjustment:** | | |
| Reclassification adjustment for amortization of experience losses recognized as net periodic benefit cost, net of income tax (benefit) of $(349) and $(309) | 1,025 | 907 |
| **Fair Value Adjustment for Cash Flow Hedges:** | | |
| Change in fair market value, net of income tax (expense) of $0 and $(17) | — | 50 |
| Reclassification adjustment for gains (losses) included in net earnings, net of income tax (expense) benefit of $0 and $(697) | — | 2,048 |
| **Total Other Comprehensive Income (Loss)** | 1,122 | (4,768) |
| **Comprehensive Income** | 13,919 | 45,598 |
| **Comprehensive (Income) Attributable to Valencia Non-controlling Interest** | (3,742) | (3,044) |
| **Preferred Stock Dividend Requirements of Subsidiary** | (132) | (132) |
| **Comprehensive Income Attributable to TXNM** | $ 10,045 | $ 42,422 |

The accompanying notes, as they relate to TXNM, are an integral part of these condensed consolidated financial statements.

Table of Contents

**TXNM ENERGY, INC. AND SUBSIDIARIES**
**CONDENSED CONSOLIDATED STATEMENTS OF CASH FLOWS**
(Unaudited)

| | Three Months Ended March 31, | |
|---|---|---|
| | **2025** | **2024** |
| | (In thousands) | |
| **Cash Flows From Operating Activities:** | | |
| Net earnings | $ 12,797 | $ 50,366 |
| Adjustments to reconcile net earnings to net cash flows from operating activities: | | |
| Depreciation and amortization | 114,300 | 103,004 |
| Deferred income tax expense | 618 | 6,935 |
| (Gain) on sale of NMRD | — | (4,449) |
| (Gains) losses on investment securities | 1,241 | (17,998) |
| Stock based compensation expense | 2,972 | 4,608 |
| Regulatory disallowances | — | 4,459 |
| Allowance for equity funds used during construction | (1,555) | (3,292) |
| Other, net | 861 | 1,031 |
| Changes in certain assets and liabilities: | | |
| Accounts receivable and unbilled revenues | 8,546 | 29,296 |
| Materials, supplies, and fuel stock | (1,383) | (6,457) |
| Other current assets | (4,401) | 24,662 |
| Other assets | (5,067) | (7,341) |
| Accounts payable | 21,652 | (31,482) |
| Accrued interest and taxes | (1,409) | (9,823) |
| Other current liabilities | (12,681) | (39,860) |
| Other liabilities | 4,766 | (10,843) |
| Net cash flows from operating activities | 141,257 | 92,816 |
| | | |
| **Cash Flows From Investing Activities:** | | |
| Additions to utility plant and non-utility plant | (342,624) | (289,100) |
| Proceeds from sale of plant assets | — | 2,840 |
| Proceeds from sales of investment securities | 90,103 | 302,510 |
| Purchases of investment securities | (92,457) | (304,971) |
| Proceeds from sale of NMRD | — | 116,936 |
| Investments in NMRD | — | (12,550) |
| Other, net | (31) | (23) |
| Net cash flows used in investing activities | (345,009) | (184,358) |

The accompanying notes, as they relate to TXNM, are an integral part of these condensed consolidated financial statements.

Table of Contents

**TXNM ENERGY, INC. AND SUBSIDIARIES**
**CONDENSED CONSOLIDATED STATEMENTS OF CASH FLOWS**
(Unaudited)

| | Three Months Ended March 31, | |
|---|---|---|
| | **2025** | **2024** |
| | (In thousands) | |
| **Cash Flows From Financing Activities:** | | |
| Revolving credit facilities borrowings | $ 513,000 | $ 658,800 |
| Revolving credit facilities repayments | (528,600) | (676,200) |
| Long-term borrowings | 335,000 | 117,000 |
| Repayment of long-term debt | (3,406) | — |
| Awards of common stock | (6,307) | (5,440) |
| Dividends paid | (37,891) | (35,085) |
| Valencia's transactions with its owner | (4,270) | (4,003) |
| Transmission interconnection and security deposit arrangements | 12,640 | 57,875 |
| Refunds paid under transmission interconnection and security deposit arrangements | (80,752) | (12,003) |
| Debt issuance costs and other, net | (1,854) | (1,435) |
| Net cash flows from financing activities | 197,560 | 99,509 |
| **Change in Cash, Cash Equivalents, and Restricted Cash** | (6,192) | 7,967 |
| **Cash, Cash Equivalents, and Restricted Cash at Beginning of Period** | 22,085 | 3,943 |
| **Cash, Cash Equivalents, and Restricted Cash at End of Period** | $ 15,893 | $ 11,910 |
| **Restricted Cash included in Other Current Assets and Other Deferred Charges on Condensed Consolidated Balance Sheets:** | | |
| At beginning of period | $ 17,587 | $ 1,728 |
| At end of period | $ 9,840 | $ 8,922 |
| **Supplemental Cash Flow Disclosures:** | | |
| Interest paid, net of amounts capitalized | $ 52,333 | $ 48,912 |
| Income taxes paid (refunded), net | $ — | $ (488) |
| **Supplemental schedule of noncash investing activities:** | | |
| Decrease in accrued plant additions | $ 62,988 | $ 40,223 |

The accompanying notes, as they relate to TXNM, are an integral part of these condensed consolidated financial statements.

Table of Contents

**TXNM ENERGY, INC. AND SUBSIDIARIES**
**CONDENSED CONSOLIDATED BALANCE SHEETS**
(Unaudited)

| | March 31, 2025 | December 31, 2024 |
|---|---|---|
| | (In thousands) | |
| **ASSETS** | | |
| **Current Assets:** | | |
| Cash and cash equivalents | $ 6,053 | $ 4,498 |
| Accounts receivable, net of allowance for credit losses of $1,353 and $1,398 | 132,378 | 130,351 |
| Unbilled revenues | 57,689 | 69,176 |
| Other receivables | 42,381 | 37,236 |
| Materials, supplies, and fuel stock | 168,244 | 166,861 |
| Regulatory assets | 40,897 | 41,492 |
| Prepaid assets | 26,286 | 25,452 |
| Income taxes receivable | 7,284 | 7,684 |
| Other current assets | 8,194 | 16,086 |
| Total current assets | 489,406 | 498,836 |
| **Other Property and Investments:** | | |
| Investment securities | 470,179 | 475,524 |
| Other investments | 290 | 259 |
| Non-utility property, net | 28,686 | 28,832 |
| Total other property and investments | 499,155 | 504,615 |
| **Utility Plant:** | | |
| Plant in service and plant held for future use | 10,800,198 | 10,697,774 |
| Less accumulated depreciation and amortization | 2,889,262 | 2,829,296 |
| | 7,910,936 | 7,868,478 |
| Construction work in progress | 637,262 | 495,976 |
| Nuclear fuel, net of accumulated amortization of $32,015 and $28,245 | 74,729 | 72,554 |
| Net utility plant | 8,622,927 | 8,437,008 |
| **Deferred Charges and Other Assets:** | | |
| Regulatory assets | 957,305 | 962,003 |
| Goodwill | 278,297 | 278,297 |
| Operating lease right-of-use assets, net of accumulated amortization | 269,399 | 272,894 |
| Other deferred charges | 274,131 | 258,080 |
| Total deferred charges and other assets | 1,779,132 | 1,771,274 |
| | $ 11,390,620 | $ 11,211,733 |

The accompanying notes, as they relate to TXNM, are an integral part of these condensed consolidated financial statements.

Table of Contents

**TXNM ENERGY, INC. AND SUBSIDIARIES**
**CONDENSED CONSOLIDATED BALANCE SHEETS**
(Unaudited)

| | March 31, 2025 | December 31, 2024 |
|---|---|---|
| | (In thousands, except share information) | |
| **LIABILITIES AND STOCKHOLDERS' EQUITY** | | |
| **Current Liabilities:** | | |
| Short-term debt | $ 593,700 | $ 609,300 |
| Current installments of long-term debt (includes $7,102 and $6,907 related to ETBC I) | 671,858 | 611,603 |
| Accounts payable | 163,132 | 204,468 |
| Customer deposits | 6,556 | 6,533 |
| Accrued interest and taxes | 102,947 | 104,756 |
| Regulatory liabilities | 32,207 | 34,173 |
| Operating lease liabilities | 14,523 | 14,293 |
| Dividends declared | 37,891 | 36,889 |
| Transmission interconnection arrangement liabilities | — | 68,085 |
| Other current liabilities | 71,361 | 84,998 |
| Total current liabilities | 1,694,175 | 1,775,098 |
| **Long-term Debt, net of Unamortized Premiums, Discounts, and Debt Issuance Costs (includes $328,152 and $331,726 related to ETBC I)** | 4,582,713 | 4,311,765 |
| **Deferred Credits and Other Liabilities:** | | |
| Accumulated deferred income taxes | 909,777 | 899,392 |
| Regulatory liabilities | 752,884 | 748,738 |
| Asset retirement obligations | 246,208 | 244,618 |
| Accrued pension liability and postretirement benefit cost | 20,559 | 23,065 |
| Operating lease liabilities | 253,493 | 255,376 |
| Other deferred credits | 368,575 | 358,867 |
| Total deferred credits and other liabilities | 2,551,496 | 2,530,056 |
| Total liabilities | 8,828,384 | 8,616,919 |
| **Commitments and Contingencies (Note 11)** | | |
| **Cumulative Preferred Stock of Subsidiary** | | |
| without mandatory redemption requirements ($100 stated value; 10,000,000 shares authorized; issued and outstanding 115,293 shares) | 11,529 | 11,529 |
| **Equity:** | | |
| TXNM common stockholders' equity: | | |
| Common stock (no par value; 200,000,000 shares authorized; issued and outstanding 92,659,335 shares) | 1,721,109 | 1,724,444 |
| Accumulated other comprehensive income (loss), net of income taxes | (74,586) | (75,708) |
| Retained earnings | 857,812 | 887,649 |
| Total TXNM common stockholders' equity | 2,504,335 | 2,536,385 |
| Non-controlling interest in Valencia | 46,372 | 46,900 |
| Total equity | 2,550,707 | 2,583,285 |
| | $ 11,390,620 | $ 11,211,733 |

The accompanying notes, as they relate to TXNM, are an integral part of these condensed consolidated financial statements.

Table of Contents

**TXNM ENERGY, INC. AND SUBSIDIARIES**
**CONDENSED CONSOLIDATED STATEMENTS OF CHANGES IN EQUITY**
(Unaudited)

| | Attributable to TXNM | | | | | |
|---|---|---|---|---|---|---|
| | Common Stock | AOCI | Retained Earnings | Total TXNM Common Stockholders' Equity | Non-controlling Interest in Valencia | Total Equity |
| | (In thousands) | | | | | |
| **Balance at December 31, 2024** | $ 1,724,444 | $ (75,708) | $ 887,649 | $ 2,536,385 | $ 46,900 | $ 2,583,285 |
| Net earnings before subsidiary preferred stock dividends | — | — | 9,055 | 9,055 | 3,742 | 12,797 |
| Total other comprehensive income | — | 1,122 | — | 1,122 | — | 1,122 |
| Subsidiary preferred stock dividends | — | — | (132) | (132) | — | (132) |
| Dividends declared on common stock | — | — | (38,760) | (38,760) | — | (38,760) |
| Awards of common stock | (6,307) | — | — | (6,307) | — | (6,307) |
| Stock based compensation expense | 2,972 | — | — | 2,972 | — | 2,972 |
| Valencia's transactions with its owner | — | — | — | — | (4,270) | (4,270) |
| **Balance at March 31, 2025** | $ 1,721,109 | $ (74,586) | $ 857,812 | $ 2,504,335 | $ 46,372 | $ 2,550,707 |
| | | | | | | |
| **Balance at December 31, 2023** | $ 1,624,823 | $ (62,840) | $ 787,110 | $ 2,349,093 | $ 49,958 | $ 2,399,051 |
| Net earnings before subsidiary preferred stock dividends | — | — | 47,322 | 47,322 | 3,044 | 50,366 |
| Total other comprehensive income (loss) | — | (4,768) | — | (4,768) | — | (4,768) |
| Subsidiary preferred stock dividends | — | — | (132) | (132) | — | (132) |
| Dividends declared on common stock | — | — | (34,952) | (34,952) | — | (34,952) |
| Awards of common stock | (5,440) | — | — | (5,440) | — | (5,440) |
| Stock based compensation expense | 4,608 | — | — | 4,608 | — | 4,608 |
| Valencia's transactions with its owner | — | — | — | — | (4,003) | (4,003) |
| **Balance at March 31, 2024** | $ 1,623,991 | $ (67,608) | $ 799,348 | $ 2,355,731 | $ 48,999 | $ 2,404,730 |

The accompanying notes, as they relate to TXNM, are an integral part of these condensed consolidated financial statements.

Table of Contents

**PUBLIC SERVICE COMPANY OF NEW MEXICO AND SUBSIDIARIES**
**A WHOLLY-OWNED SUBSIDIARY OF TXNM ENERGY, INC.**
**CONDENSED CONSOLIDATED STATEMENTS OF EARNINGS**
(Unaudited)

| | Three Months Ended March 31, | |
|---|---|---|
| | **2025** | **2024** |
| | (In thousands) | |
| **Electric Operating Revenues** | $ 333,380 | $ 308,115 |
| **Operating Expenses:** | | |
| Cost of energy | 130,954 | 97,412 |
| Administrative and general | 57,610 | 51,736 |
| Energy production costs | 24,546 | 22,212 |
| Regulatory disallowances | — | 4,459 |
| Depreciation and amortization | 59,803 | 53,287 |
| Transmission and distribution costs | 15,826 | 14,350 |
| Taxes other than income taxes | 13,303 | 13,709 |
| Total operating expenses | 302,042 | 257,165 |
| Operating income | 31,338 | 50,950 |
| **Other Income and Deductions:** | | |
| Interest income | 4,217 | 4,527 |
| Gains (losses) on investment securities | (1,241) | 17,998 |
| Other income | 1,802 | 3,418 |
| Other (deductions) | (1,518) | (870) |
| Net other income and deductions | 3,260 | 25,073 |
| **Interest Charges** | 29,816 | 25,116 |
| **Earnings before Income Taxes** | 4,782 | 50,907 |
| **Income Taxes (Benefits)** | (37) | 5,811 |
| **Net Earnings** | 4,819 | 45,096 |
| **(Earnings) Attributable to Valencia Non-controlling Interest** | (3,742) | (3,044) |
| **Net Earnings Attributable to PNM** | 1,077 | 42,052 |
| **Preferred Stock Dividend Requirements** | (132) | (132) |
| **Net Earnings Available for PNM Common Stock** | $ 945 | $ 41,920 |

The accompanying notes, as they relate to PNM, are an integral part of these condensed consolidated financial statements.

Table of Contents

**PUBLIC SERVICE COMPANY OF NEW MEXICO AND SUBSIDIARIES**
**A WHOLLY-OWNED SUBSIDIARY OF TXNM ENERGY, INC.**
**CONDENSED CONSOLIDATED STATEMENTS OF COMPREHENSIVE INCOME**
(Unaudited)

| | Three Months Ended March 31, | |
|---|---|---|
| | **2025** | **2024** |
| | (In thousands) | |
| **Net Earnings** | $ 4,819 | $ 45,096 |
| **Other Comprehensive Income:** | | |
| **Unrealized Gains on Available-for-Sale Debt Securities**: | | |
| Net increase in unrealized holding gains arising during the period, net of income tax (expense) benefit of $(68) and $(125) | 199 | 366 |
| Reclassification adjustment for (gains) included in net earnings, net of income tax expense of $35 and $2,771 | (102) | (8,139) |
| **Pension Liability Adjustment:** | | |
| Reclassification adjustment for amortization of experience losses recognized as net periodic benefit cost, net of income tax (benefit) of $(349) and $(309) | 1,025 | 907 |
| **Total Other Comprehensive Income (Loss)** | 1,122 | (6,866) |
| **Comprehensive Income** | 5,941 | 38,230 |
| **Comprehensive (Income) Attributable to Valencia Non-controlling Interest** | (3,742) | (3,044) |
| **Comprehensive Income Attributable to PNM** | $ 2,199 | $ 35,186 |

The accompanying notes, as they relate to PNM, are an integral part of these condensed consolidated financial statements.

Table of Contents

**PUBLIC SERVICE COMPANY OF NEW MEXICO AND SUBSIDIARIES**
**A WHOLLY-OWNED SUBSIDIARY OF TXNM ENERGY, INC.**
**CONDENSED CONSOLIDATED STATEMENTS OF CASH FLOWS**
(Unaudited)

| | Three Months Ended March 31, | |
|---|---|---|
| | **2025** | **2024** |
| | (In thousands) | |
| **Cash Flows From Operating Activities:** | | |
| Net earnings | $ 4,819 | $ 45,096 |
| Adjustments to reconcile net earnings to net cash flows from operating activities: | | |
| Depreciation and amortization | 66,622 | 60,356 |
| Deferred income tax expense (benefit) | (35) | 6,030 |
| (Gains) losses on investment securities | 1,241 | (17,998) |
| Regulatory disallowances | — | 4,459 |
| Allowance for equity funds used during construction | (953) | (3,015) |
| Other, net | 873 | 927 |
| Changes in certain assets and liabilities: | | |
| Accounts receivable and unbilled revenues | 7,877 | 22,352 |
| Materials, supplies, and fuel stock | 90 | (3,612) |
| Other current assets | (11,011) | 3,864 |
| Other assets | (2,035) | 293 |
| Accounts payable | 18,617 | (29,330) |
| Accrued interest and taxes | 12,817 | 19,787 |
| Other current liabilities | (5,823) | (27,435) |
| Other liabilities | (4,201) | (7,407) |
| Net cash flows from operating activities | 88,898 | 74,367 |
| | | |
| **Cash Flows From Investing Activities:** | | |
| Utility plant additions | (144,676) | (154,975) |
| Proceeds from sale of plant assets | — | 2,840 |
| Proceeds from sales of investment securities | 90,103 | 302,510 |
| Purchases of investment securities | (92,457) | (304,971) |
| Other, net | (31) | (23) |
| Net cash flows used in investing activities | (147,061) | (154,619) |

The accompanying notes, as they relate to PNM, are an integral part of these condensed consolidated financial statements.

Table of Contents

**PUBLIC SERVICE COMPANY OF NEW MEXICO AND SUBSIDIARIES**
**A WHOLLY-OWNED SUBSIDIARY OF TXNM ENERGY, INC.**
**CONDENSED CONSOLIDATED STATEMENTS OF CASH FLOWS**
(Unaudited)

| | Three Months Ended March 31, | |
|---|---|---|
| | **2025** | **2024** |
| | (In thousands) | |
| **Cash Flows From Financing Activities:** | | |
| Revolving credit facilities borrowings | $ 203,700 | $ 292,500 |
| Revolving credit facilities repayments | (269,200) | (243,800) |
| Short-term borrowings – affiliate, net | 1,600 | 2,300 |
| Long-term borrowings | 195,000 | — |
| Repayment of long-term debt | (3,406) | — |
| Dividends paid | (132) | (132) |
| Valencia's transactions with its owner | (4,270) | (4,003) |
| Transmission interconnection and security deposit arrangements | 2,190 | 51,125 |
| Refunds paid under transmission interconnection and security deposit arrangements | (72,252) | (9,103) |
| Debt issuance costs and other, net | (558) | (474) |
| Net cash flows from financing activities | 52,672 | 88,413 |
| **Change in Cash, Cash Equivalents, and Restricted Cash** | (5,491) | 8,161 |
| **Cash, Cash Equivalents, and Restricted Cash at Beginning of Period** | 20,285 | 2,586 |
| **Cash, Cash Equivalents, and Restricted Cash at End of Period** | $ 14,794 | $ 10,747 |
| **Restricted Cash included in Other Current Assets and Other Deferred Charges on Condensed Consolidated Balance Sheets:** | | |
| At beginning of period | $ 17,587 | $ 1,728 |
| At end of period | $ 9,840 | $ 8,922 |
| **Supplemental Cash Flow Disclosures:** | | |
| Interest paid, net of amounts capitalized | $ 24,219 | $ 9,121 |
| Income taxes paid (refunded), net | $ — | $ — |
| **Supplemental schedule of noncash investing activities:** | | |
| Decrease in accrued plant additions | $ 18,207 | $ 14,770 |

The accompanying notes, as they relate to PNM, are an integral part of these condensed consolidated financial statements.

Table of Contents

**PUBLIC SERVICE COMPANY OF NEW MEXICO AND SUBSIDIARIES**
**A WHOLLY-OWNED SUBSIDIARY OF TXNM ENERGY, INC.**
**CONDENSED CONSOLIDATED BALANCE SHEETS**
(Unaudited)

| | March 31, 2025 | December 31, 2024 |
|---|---|---|
| | (In thousands) | |
| **ASSETS** | | |
| **Current Assets:** | | |
| Cash and cash equivalents | $ 4,954 | $ 2,698 |
| Accounts receivable, net of allowance for credit losses of $1,353 and $1,398 | 97,038 | 95,932 |
| Unbilled revenues | 43,086 | 52,983 |
| Other receivables | 32,617 | 24,174 |
| Affiliate receivables | 9,190 | 9,241 |
| Materials, supplies, and fuel stock | 142,419 | 142,510 |
| Regulatory assets | 37,460 | 36,224 |
| Prepaid assets | 16,872 | 14,746 |
| Income taxes receivable | 16,311 | 16,309 |
| Other current assets | 8,267 | 16,091 |
| Total current assets | 408,214 | 410,908 |
| **Other Property and Investments:** | | |
| Investment securities | 470,179 | 475,524 |
| Other investments | 215 | 184 |
| Non-utility property, net | 13,809 | 13,647 |
| Total other property and investments | 484,203 | 489,355 |
| **Utility Plant:** | | |
| Plant in service and plant held for future use | 6,867,879 | 6,797,493 |
| Less accumulated depreciation and amortization | 2,112,546 | 2,079,363 |
| | 4,755,333 | 4,718,130 |
| Construction work in progress | 355,461 | 328,403 |
| Nuclear fuel, net of accumulated amortization of $32,015 and $28,245 | 74,729 | 72,554 |
| Net utility plant | 5,185,523 | 5,119,087 |
| **Deferred Charges and Other Assets:** | | |
| Regulatory assets | 851,188 | 857,310 |
| Goodwill | 51,632 | 51,632 |
| Operating lease right-of-use assets, net of accumulated amortization | 268,291 | 271,433 |
| Other deferred charges | 222,765 | 207,554 |
| Total deferred charges and other assets | 1,393,876 | 1,387,929 |
| | $ 7,471,816 | $ 7,407,279 |

The accompanying notes, as they relate to PNM, are an integral part of these condensed consolidated financial statements.

Table of Contents

**PUBLIC SERVICE COMPANY OF NEW MEXICO AND SUBSIDIARIES**
**A WHOLLY-OWNED SUBSIDIARY OF TXNM ENERGY, INC.**
**CONDENSED CONSOLIDATED BALANCE SHEETS**
(Unaudited)

| | March 31, 2025 | December 31, 2024 |
|---|---|---|
| | (In thousands, except share information) | |
| **LIABILITIES AND STOCKHOLDER'S EQUITY** | | |
| **Current Liabilities:** | | |
| Short-term debt | $ 298,300 | $ 363,800 |
| Short-term debt - affiliate | 1,600 | — |
| Current installments of long-term debt (includes $7,102 and $6,907 related to ETBC I) | 560,942 | 560,637 |
| Accounts payable | 124,293 | 123,883 |
| Affiliate payables | 12,321 | 15,695 |
| Customer deposits | 6,556 | 6,533 |
| Accrued interest and taxes | 59,742 | 46,923 |
| Regulatory liabilities | 30,946 | 33,571 |
| Operating lease liabilities | 13,958 | 13,542 |
| Dividends declared | 132 | 132 |
| Transmission interconnection arrangement liabilities | — | 68,085 |
| Other current liabilities | 48,138 | 50,099 |
| Total current liabilities | 1,156,928 | 1,282,900 |
| **Long-term Debt, net of Unamortized Premiums, Discounts, and Debt Issuance Costs (includes $328,152 and $331,726 related to ETBC I)** | 2,090,616 | 1,898,955 |
| **Deferred Credits and Other Liabilities:** | | |
| Accumulated deferred income taxes | 765,386 | 756,218 |
| Regulatory liabilities | 511,369 | 518,701 |
| Asset retirement obligations | 245,233 | 243,663 |
| Accrued pension liability and postretirement benefit cost | 19,758 | 22,067 |
| Operating lease liabilities | 252,963 | 254,702 |
| Other deferred credits | 232,297 | 234,346 |
| Total deferred credits and liabilities | 2,027,006 | 2,029,697 |
| Total liabilities | 5,274,550 | 5,211,552 |
| **Commitments and Contingencies (Note 11)** | | |
| **Cumulative Preferred Stock** | | |
| without mandatory redemption requirements ($100 stated value; 10,000,000 shares authorized; issued and outstanding 115,293 shares) | 11,529 | 11,529 |
| **Equity:** | | |
| PNM common stockholder's equity: | | |
| Common stock (no par value; 40,000,000 shares authorized; issued and outstanding 39,117,799 shares) | 1,602,918 | 1,602,918 |
| Accumulated other comprehensive income (loss), net of income taxes | (74,586) | (75,708) |
| Retained earnings | 611,033 | 610,088 |
| Total PNM common stockholder's equity | 2,139,365 | 2,137,298 |
| Non-controlling interest in Valencia | 46,372 | 46,900 |
| Total equity | 2,185,737 | 2,184,198 |
| | $ 7,471,816 | $ 7,407,279 |

The accompanying notes, as they relate to PNM, are an integral part of these condensed consolidated financial statements.

Table of Contents

**PUBLIC SERVICE COMPANY OF NEW MEXICO AND SUBSIDIARIES**
**A WHOLLY-OWNED SUBSIDIARY OF TXNM ENERGY, INC.**
**CONDENSED CONSOLIDATED STATEMENTS OF CHANGES IN EQUITY**
(Unaudited)

| | Attributable to PNM | | | | | |
|---|---|---|---|---|---|---|
| | Common Stock | AOCI | Retained Earnings | Total PNM Common Stockholder's Equity | Non-controlling Interest in Valencia | Total Equity |
| | (In thousands) | | | | | |
| **Balance at December 31, 2024** | $ 1,602,918 | $ (75,708) | $ 610,088 | $ 2,137,298 | $ 46,900 | $ 2,184,198 |
| Net earnings | — | — | 1,077 | 1,077 | 3,742 | 4,819 |
| Total other comprehensive income | — | 1,122 | — | 1,122 | — | 1,122 |
| Dividends declared on preferred stock | — | — | (132) | (132) | — | (132) |
| Valencia's transactions with its owner | — | — | — | — | (4,270) | (4,270) |
| **Balance at March 31, 2025** | $ 1,602,918 | $ (74,586) | $ 611,033 | $ 2,139,365 | $ 46,372 | $ 2,185,737 |
| | | | | | | |
| **Balance at December 31, 2023** | $ 1,547,918 | $ (66,505) | $ 469,404 | $ 1,950,817 | $ 49,958 | $ 2,000,775 |
| Net earnings | — | — | 42,052 | 42,052 | 3,044 | 45,096 |
| Total other comprehensive income (loss) | — | (6,866) | — | (6,866) | — | (6,866) |
| Dividends declared on preferred stock | — | — | (132) | (132) | — | (132) |
| Valencia's transactions with its owner | — | — | — | — | (4,003) | (4,003) |
| **Balance at March 31, 2024** | $ 1,547,918 | $ (73,371) | $ 511,324 | $ 1,985,871 | $ 48,999 | $ 2,034,870 |

The accompanying notes, as they relate to PNM, are an integral part of these condensed consolidated financial statements.

Table of Contents

**TEXAS-NEW MEXICO POWER COMPANY AND SUBSIDIARIES**
**A WHOLLY-OWNED SUBSIDIARY OF TXNM ENERGY, INC.**
**CONDENSED CONSOLIDATED STATEMENTS OF EARNINGS**
(Unaudited)

| | Three Months Ended March 31, | |
|---|---|---|
| | **2025** | **2024** |
| | (In thousands) | |
| **Electric Operating Revenues** | $ 149,412 | $ 128,762 |
| **Operating Expenses:** | | |
| Cost of energy | 38,228 | 34,892 |
| Administrative and general | 12,041 | 13,669 |
| Depreciation and amortization | 35,213 | 30,382 |
| Transmission and distribution costs | 9,679 | 8,414 |
| Taxes other than income taxes | 11,504 | 10,667 |
| Total operating expenses | 106,665 | 98,024 |
| Operating income | 42,747 | 30,738 |
| **Other Income and Deductions:** | | |
| Interest income | 154 | 169 |
| Other income | 2,520 | 1,173 |
| Other (deductions) | (268) | (297) |
| Net other income and deductions | 2,406 | 1,045 |
| **Interest Charges** | 17,322 | 13,336 |
| **Earnings before Income Taxes** | 27,831 | 18,447 |
| **Income Taxes** | 5,548 | 3,864 |
| **Net Earnings** | $ 22,283 | $ 14,583 |

The accompanying notes, as they relate to TNMP, are an integral part of these condensed consolidated financial statements.

Table of Contents

**TEXAS-NEW MEXICO POWER COMPANY AND SUBSIDIARIES**
**A WHOLLY-OWNED SUBSIDIARY OF TXNM ENERGY, INC.**
**CONDENSED CONSOLIDATED STATEMENTS OF CASH FLOWS**
(Unaudited)

| | Three Months Ended March 31, | |
|---|---|---|
| | **2025** | **2024** |
| | (In thousands) | |
| **Cash Flows From Operating Activities:** | | |
| Net earnings | $ 22,283 | $ 14,583 |
| Adjustments to reconcile net earnings to net cash flows from operating activities: | | |
| Depreciation and amortization | 35,468 | 30,525 |
| Deferred income tax expense | 3,339 | 3,428 |
| Allowance for equity funds used during construction and other, net | (614) | (276) |
| Changes in certain assets and liabilities: | | |
| Accounts receivable and unbilled revenues | 669 | 6,944 |
| Materials and supplies | (1,474) | (2,845) |
| Other current assets | 7,922 | 20,581 |
| Other assets | (1,612) | (450) |
| Accounts payable | 1,773 | 170 |
| Accrued interest and taxes | (21,187) | (19,053) |
| Other current liabilities | 981 | (7,085) |
| Other liabilities | 7,306 | (5,028) |
| Net cash flows from operating activities | 54,854 | 41,494 |
| **Cash Flows From Investing Activities:** | | |
| Utility plant additions | (184,161) | (124,646) |
| Net cash flows used in investing activities | (184,161) | (124,646) |
| **Cash Flows From Financing Activities:** | | |
| Revolving credit facilities borrowings | 112,700 | 127,100 |
| Revolving credit facilities repayments | (124,400) | (163,900) |
| Long-term borrowings | 140,000 | 117,000 |
| Transmission interconnection and security deposit arrangements | 10,450 | 6,750 |
| Refunds paid under transmission interconnection and security deposit arrangements | (8,500) | (2,900) |
| Debt issuance costs and other, net | (1,176) | (898) |
| Net cash flows from financing activities | 129,074 | 83,152 |
| | | |
| **Change in Cash and Cash Equivalents** | (233) | — |
| **Cash and Cash Equivalents at Beginning of Period** | 233 | — |
| **Cash and Cash Equivalents at End of Period** | $ — | $ — |
| | | |
| **Supplemental Cash Flow Disclosures:** | | |
| Interest paid, net of amounts capitalized | $ 19,813 | $ 13,532 |
| Income taxes paid (refunded), net | $ — | $ (488) |
| | | |
| **Supplemental schedule of noncash investing activities:** | | |
| Decrease in accrued plant additions | $ 43,759 | $ 20,472 |

The accompanying notes, as they relate to TNMP, are an integral part of these condensed consolidated financial statements.

Table of Contents

**TEXAS-NEW MEXICO POWER COMPANY AND SUBSIDIARIES**
**A WHOLLY-OWNED SUBSIDIARY OF TXNM ENERGY, INC.**
**CONDENSED CONSOLIDATED BALANCE SHEETS**
(Unaudited)

| | March 31, 2025 | December 31, 2024 |
|---|---|---|
| | (In thousands) | |
| **ASSETS** | | |
| **Current Assets:** | | |
| Cash and cash equivalents | $ — | $ 233 |
| Accounts receivable | 35,340 | 34,419 |
| Unbilled revenues | 14,603 | 16,193 |
| Other receivables | 11,664 | 15,144 |
| Affiliate receivables | 57 | — |
| Materials and supplies | 25,825 | 24,351 |
| Regulatory assets | 3,437 | 5,268 |
| Prepaid and other current assets | 2,415 | 4,908 |
| Total current assets | 93,341 | 100,516 |
| **Other Property and Investments:** | | |
| Other investments | 75 | 75 |
| Non-utility property, net | 12,734 | 13,137 |
| Total other property and investments | 12,809 | 13,212 |
| **Utility Plant:** | | |
| Plant in service and plant held for future use | 3,660,428 | 3,635,550 |
| Less accumulated depreciation and amortization | 632,504 | 616,741 |
| | 3,027,924 | 3,018,809 |
| Construction work in progress | 272,873 | 165,527 |
| Net utility plant | 3,300,797 | 3,184,336 |
| **Deferred Charges and Other Assets:** | | |
| Regulatory assets | 106,117 | 104,693 |
| Goodwill | 226,665 | 226,665 |
| Operating lease right-of-use assets, net of accumulated amortization | 581 | 923 |
| Other deferred charges | 20,404 | 18,780 |
| Total deferred charges and other assets | 353,767 | 351,061 |
| | $ 3,760,714 | $ 3,649,125 |

The accompanying notes, as they relate to TNMP, are an integral part of these condensed consolidated financial statements.

Table of Contents

**TEXAS-NEW MEXICO POWER COMPANY AND SUBSIDIARIES**
**A WHOLLY-OWNED SUBSIDIARY OF TXNM ENERGY, INC.**
**CONDENSED CONSOLIDATED BALANCE SHEETS**
(Unaudited)

| | March 31, 2025 | December 31, 2024 |
|---|---|---|
| | (In thousands, except share information) | |
| **LIABILITIES AND STOCKHOLDER'S EQUITY** | | |
| **Current Liabilities:** | | |
| Short-term debt | $ 139,900 | $ 151,600 |
| Current installments of long-term debt | 59,929 | — |
| Accounts payable | 25,131 | 67,116 |
| Affiliate payables | 5,191 | 7,339 |
| Accrued interest and taxes | 35,554 | 56,740 |
| Regulatory liabilities | 1,261 | 602 |
| Operating lease liabilities | 527 | 713 |
| Other current liabilities | 8,700 | 6,964 |
| Total current liabilities | 276,193 | 291,074 |
| **Long-term Debt, net of Unamortized Premiums, Discounts, and Debt Issuance Costs** | 1,543,258 | 1,464,079 |
| **Deferred Credits and Other Liabilities:** | | |
| Accumulated deferred income taxes | 212,009 | 208,107 |
| Regulatory liabilities | 241,515 | 230,037 |
| Asset retirement obligations | 975 | 955 |
| Accrued pension liability and postretirement benefit cost | 801 | 998 |
| Operating lease liabilities | 34 | 167 |
| Other deferred credits | 98,457 | 88,519 |
| Total deferred credits and other liabilities | 553,791 | 528,783 |
| Total liabilities | 2,373,242 | 2,283,936 |
| **Commitments and Contingencies (Note 11)** | | |
| **Common Stockholder's Equity:** | | |
| Common stock ($10 par value; 12,000,000 shares authorized; issued and outstanding 6,358 shares) | 64 | 64 |
| Paid-in-capital | 870,066 | 870,066 |
| Retained earnings | 517,342 | 495,059 |
| Total common stockholder's equity | 1,387,472 | 1,365,189 |
| | $ 3,760,714 | $ 3,649,125 |

The accompanying notes, as they relate to TNMP, are an integral part of these condensed consolidated financial statements.

Table of Contents

**TEXAS-NEW MEXICO POWER COMPANY AND SUBSIDIARIES**
**A WHOLLY-OWNED SUBSIDIARY OF TXNM ENERGY, INC.**
**CONDENSED CONSOLIDATED STATEMENTS OF CHANGES IN COMMON STOCKHOLDER'S EQUITY**
(Unaudited)

| | Common Stock | Paid-in Capital | Retained Earnings | Total Common Stockholder's Equity |
|---|---|---|---|---|
| | | | (In thousands) | |
| **Balance at December 31, 2024** | $ 64 | $ 870,066 | $ 495,059 | $ 1,365,189 |
| Net earnings | — | — | 22,283 | 22,283 |
| **Balance at March 31, 2025** | $ 64 | $ 870,066 | $ 517,342 | $ 1,387,472 |
| | | | | |
| **Balance at December 31, 2023** | $ 64 | $ 846,066 | $ 391,531 | $ 1,237,661 |
| Net earnings | — | — | 14,583 | 14,583 |
| **Balance at March 31, 2024** | $ 64 | $ 846,066 | $ 406,114 | $ 1,252,244 |

The accompanying notes, as they relate to TNMP, are an integral part of these condensed consolidated financial statements.

Table of Contents

**TXNM ENERGY, INC. AND SUBSIDIARIES**
**PUBLIC SERVICE COMPANY OF NEW MEXICO AND SUBSIDIARIES**
**TEXAS-NEW MEXICO POWER COMPANY AND SUBSIDIARIES**

**NOTES TO CONDENSED CONSOLIDATED FINANCIAL STATEMENTS**
(Unaudited)

## (1) Significant Accounting Policies and Responsibility for Financial Statements

### Financial Statement Preparation

In the opinion of management, the accompanying unaudited interim Condensed Consolidated Financial Statements reflect all normal and recurring accruals and adjustments that are necessary to present fairly the consolidated financial position at March 31, 2025 and December 31, 2024, and the consolidated results of operations, comprehensive income, and cash flows for the three months ended March 31, 2025 and 2024. The preparation of financial statements in conformity with GAAP requires management to make estimates and assumptions that affect the reported amounts of assets and liabilities, disclosure of contingent assets and liabilities at the date of the financial statements, and the reported amounts of revenues and expenses during the reporting period. Actual results could ultimately differ from those estimated. Weather causes the Company's results of operations to be seasonal in nature and the results of operations presented in the accompanying Condensed Consolidated Financial Statements are not necessarily representative of operations for an entire year.

On August 2, 2024, PNM Resources, Inc. ("PNMR") amended its Articles of Incorporation to change its name to TXNM Energy, Inc. ("TXNM") and increase the number of authorized shares of the Company's common stock from 120,000,000 to 200,000,000. The Notes to Condensed Consolidated Financial Statements include disclosures for TXNM, PNM, and TNMP. This report uses the term "Company" when discussing matters of common applicability to TXNM, PNM, and TNMP. Discussions regarding only TXNM, PNM, or TNMP are so indicated.

These Condensed Consolidated Financial Statements are unaudited. Certain information and note disclosures normally included in the annual audited Consolidated Financial Statements have been condensed or omitted, as permitted under the applicable rules and regulations. Readers of these financial statements should refer to TXNM's, PNM's, and TNMP's audited Consolidated Financial Statements and Notes thereto that are included in their respective 2024 Annual Reports on Form 10-K.

GAAP defines subsequent events as events or transactions that occur after the balance sheet date but before financial statements are issued or are available to be issued. Based on their nature, magnitude, and timing, certain subsequent events may be required to be reflected at the balance sheet date and/or required to be disclosed in the financial statements. The Company has evaluated subsequent events accordingly.

### Principles of Consolidation

The Condensed Consolidated Financial Statements of each of TXNM, PNM, and TNMP include their accounts and those of subsidiaries in which that entity owns a majority voting interest. PNM also consolidates Valencia and ETBC I. See Note 6. PNM owns undivided interests in several jointly-owned power plants and records its pro-rata share of the assets, liabilities, and expenses for those plants. The agreements for the jointly-owned plants provide that if an owner were to default on its payment obligations, the non-defaulting owners would be responsible for their proportionate share of the obligations of the defaulting owner. In exchange, the non-defaulting owners would be entitled to their proportionate share of the generating capacity of the defaulting owner. There have been no such payment defaults under any of the agreements for the jointly-owned plants.

PNMR Services Company expenses, which represent costs that are primarily driven by corporate level activities, are charged to the business segments. These services are billed at cost and are reflected as general and administrative expenses in the business segments. Other significant intercompany transactions between TXNM, PNM, and TNMP include interest and income tax sharing payments, as well as equity transactions. See Note 15. All intercompany transactions and balances have been eliminated.

### Equity Method Investment (Previously held)

As discussed in Note 21 of the Company's 2024 Annual Reports on Form 10-K, PNMR Development and AEP OnSite Partners created NMRD in September 2017 to pursue the acquisition, development, and ownership of renewable energy generation projects, primarily in the state of New Mexico. On February 27, 2024, PNMR Development and AEP OnSite Partners sold their respective interests in NMRD. In the three months ended March 31, 2024, PNMR Development received net proceeds of $117.0 million and recognized an after-tax gain of $4.4 million, which was presented as cash flows from operating activities on the Condensed Consolidated Statement of Cash Flows. The recognition of deferred investment tax credits of $15.7 million was also recognized as an income tax benefit on the Condensed Consolidated Statement of Earnings.

Table of Contents

**TXNM ENERGY, INC. AND SUBSIDIARIES**
**PUBLIC SERVICE COMPANY OF NEW MEXICO AND SUBSIDIARIES**
**TEXAS-NEW MEXICO POWER COMPANY AND SUBSIDIARIES**

**NOTES TO CONDENSED CONSOLIDATED FINANCIAL STATEMENTS**
(Unaudited)

**Dividends on Common Stock**

Dividends on TXNM's common stock are declared by the Board. The timing of the declaration of dividends is dependent on the timing of meetings and other actions of the Board. The Board declared dividends on common stock of $0.4075 per share in February 2025 and $0.3875 per share in February 2024, which are reflected as Dividends Declared per Common Share on the TXNM Condensed Consolidated Statement of Earnings.

TXNM did not make any cash equity contributions to TNMP or PNM in the three months ended March 31, 2025 and 2024. Neither PNM nor TNMP declared or paid any cash dividends on their common stock to TXNM in the three months ended March 31, 2025 and 2024.

**New Accounting Pronouncements**

Information concerning recently issued accounting pronouncements that have not yet been adopted by the Company is presented below. The Company does not expect difficulty in adopting these standards by their required effective dates.

*Accounting Standards Update 2023-09 - Income Taxes (Topic 740): Improvements to Income Tax Disclosures*

In December 2023, the FASB issued ASU 2023-09 enhancing the transparency and decision usefulness of income tax disclosures. Disclosure requirements of this update include (on an annual basis) the disclosure of specific categories in the rate reconciliation and the inclusion of additional information for reconciling items that meet a quantitative threshold (if the effect of the reconciling item is equal to or greater than 5 percent of the amount computed by multiplying pre-tax income by the applicable statutory rate). The amendment also requires the disclosure (on an annual basis) of information about income taxes paid (net of refunds) including the disaggregation by federal, state, and foreign taxes as well as by individual jurisdiction. Additional requirements include the disclosure of income (loss) from continuing operations before income tax expense (benefit) disaggregated between foreign and domestic as well as income tax expense (benefit) from continuing operations disaggregated by federal, state, and foreign. ASU 2023-09 is effective for the Company for the annual reporting period beginning after December 15, 2024, with early adoption being permitted. ASU 2023-09 is to be applied on a prospective basis with retrospective application permitted. The Company expects to adopt the disclosure requirements of ASU 2023-09 with its Annual Report on Form 10-K for the year ended December 31, 2025.

*Accounting Standards Update 2024-03 - Income Statement (Subtopic 220-40): Reporting Comprehensive Income - Expense Disaggregation Disclosures*

In November 2024, the FASB issued ASU 2024-03 that will require disclosure, in the notes to the financial statements, of specified information about certain costs and expenses at each interim and annual period. Disclosures should include amounts for purchases of inventory, employee compensation, depreciation, and intangible asset amortization; certain amounts that are already required to be disclosed under GAAP in the same disclosure as other disaggregation requirements; qualitative descriptions of the amounts remaining in relevant expense categories that are not disaggregated; and the total amount of selling expenses including the entity's definition of selling expenses. In January 2025, ASU 2025-01 was issued to clarify that the amendments of ASU 2024-03 are effective for public business entities for annual reporting periods beginning after December 15, 2026 and interim reporting periods beginning after December 15, 2027.

**(2) Segment Information**

TXNM has three reportable segments, namely PNM, TNMP, and Corporate and Other. The accounting policies of the segments are the same as those described in the summary of significant accounting policies. The measure of profitability used by the CODM is Segment earnings (loss) attributable to TXNM, as presented below. The CODM uses this measure of profitability to allocate resources for each segment predominantly in the annual budget and forecasting process. The CODM considers budget to actual variances on a regular basis when making decisions about allocating capital and operational expense funding to the segments. TXNM's CODM is its President and COO who is also the CEO of the PNM and TNMP segments.

**PNM**

PNM includes the retail electric utility operations of PNM that are subject to traditional rate regulation by the NMPRC. PNM provides integrated electricity services that include the generation, transmission, and distribution of electricity for retail electric customers in New Mexico. PNM also includes the generation and sale of electricity into the wholesale market, which includes the asset optimization of PNM's jurisdictional capacity as well as providing transmission services to third parties.

Table of Contents

**TXNM ENERGY, INC. AND SUBSIDIARIES**
**PUBLIC SERVICE COMPANY OF NEW MEXICO AND SUBSIDIARIES**
**TEXAS-NEW MEXICO POWER COMPANY AND SUBSIDIARIES**

**NOTES TO CONDENSED CONSOLIDATED FINANCIAL STATEMENTS**
(Unaudited)

FERC has jurisdiction over wholesale power and transmission rates. PNM includes the results of ETBC I since its formation in 2023.

**TNMP**

TNMP is an electric utility providing services in Texas under the TECA. TNMP's operations are subject to traditional rate regulation by the PUCT. TNMP provides transmission and distribution services at regulated rates to various REPs that, in turn, provide retail electric service to consumers within TNMP's service area. TNMP also provides transmission services at regulated rates to other utilities that interconnect with TNMP's facilities.

**Corporate and Other**

The Corporate and Other segment includes TXNM holding company activities, primarily related to corporate level debt and PNMR Services Company. The activities of PNMR Development and the equity method investment in NMRD were also included in Corporate and Other until the close of the sale of NMRD on February 27, 2024. Eliminations of intercompany transactions are reflected in the Corporate and Other segment.

The following tables present summarized financial information for TXNM by segment. PNM and TNMP each operate in only one segment. Therefore, tabular segment information is not presented for PNM and TNMP.

**TXNM SEGMENT INFORMATION**

| | PNM | TNMP | Corporate and Other | TXNM |
|---|---|---|---|---|
| | | (In thousands) | | |
| **Three Months Ended March 31, 2025** | | | | |
| **Electric operating revenues** | $ 333,380 | $ 149,412 | $ — | $ 482,792 |
| **Cost of energy** | | | | |
| Fuel burn | 26,541 | — | — | 26,541 |
| Purchases for resale | 97,235 | — | — | 97,235 |
| Transmission by others | 7,178 | 38,228 | — | 45,406 |
| **Significant segment expenses** | | | | |
| Administrative and general - direct | 17,866 | (2,052) | 36,570 | 52,384 |
| Administrative and general - corporate allocation | 32,087 | 13,376 | (45,463) | — |
| Customer related expenses | 7,657 | 717 | 11 | 8,385 |
| Energy production costs | 24,546 | — | — | 24,546 |
| Depreciation and amortization | 59,803 | 35,213 | 9,535 | 104,551 |
| Transmission and distribution costs | 15,826 | 9,679 | — | 25,505 |
| Taxes other than income taxes | 13,303 | 11,504 | 1,543 | 26,350 |
| **Total operating expenses** | 302,042 | 106,665 | 2,196 | 410,903 |
| Net other income and (deductions) | 3,260 | 2,406 | (189) | 5,477 |
| Interest charges | (29,816) | (17,322) | (16,413) | (63,551) |
| Income taxes (benefit) | (37) | 5,548 | (4,493) | 1,018 |
| Valencia non-controlling interest | (3,742) | — | — | (3,742) |
| Subsidiary preferred stock dividends | (132) | — | — | (132) |
| **Segment earnings (loss) attributable to TXNM** | $ 945 | $ 22,283 | $ (14,305) | $ 8,923 |
| **At March 31, 2025:** | | | | |
| **Total Assets** | $ 7,471,816 | $ 3,760,714 | $ 158,090 | $ 11,390,620 |
| **Goodwill** | $ 51,632 | $ 226,665 | $ — | $ 278,297 |

Table of Contents

**TXNM ENERGY, INC. AND SUBSIDIARIES**
**PUBLIC SERVICE COMPANY OF NEW MEXICO AND SUBSIDIARIES**
**TEXAS-NEW MEXICO POWER COMPANY AND SUBSIDIARIES**

**NOTES TO CONDENSED CONSOLIDATED FINANCIAL STATEMENTS**
(Unaudited)

| | PNM | TNMP | Corporate and Other | TXNM |
|---|---|---|---|---|
| | | | (In thousands) | |
| **Three Months Ended March 31, 2024** | | | | |
| **Electric operating revenues** | $ 308,115 | $ 128,762 | $ — | $ 436,877 |
| **Cost of energy** | | | | |
| Fuel burn | 36,682 | — | — | 36,682 |
| Purchases for resale | 54,468 | — | — | 54,468 |
| Transmission by others | 6,262 | 34,892 | — | 41,154 |
| **Significant segment expenses** | | | | |
| Administrative and general - direct | 9,039 | (1,284) | 39,640 | 47,395 |
| Administrative and general - corporate allocation | 35,407 | 14,236 | (49,643) | — |
| Customer related expenses | 7,290 | 717 | 25 | 8,032 |
| Energy production costs | 22,212 | — | — | 22,212 |
| Regulatory disallowances | 4,459 | — | — | 4,459 |
| Depreciation and amortization | 53,287 | 30,382 | 9,518 | 93,187 |
| Transmission and distribution costs | 14,350 | 8,414 | — | 22,764 |
| Taxes other than income taxes | 13,709 | 10,667 | 1,558 | 25,934 |
| **Total operating expenses** | 257,165 | 98,024 | 1,098 | 356,287 |
| Net other income and (deductions) | 25,073 | 1,045 | (15,151) | 10,967 |
| Interest charges | (25,116) | (13,336) | (15,310) | (53,762) |
| Income taxes (benefit) | 5,811 | 3,864 | (22,246) | (12,571) |
| Valencia non-controlling interest | (3,044) | — | — | (3,044) |
| Subsidiary preferred stock dividends | (132) | — | — | (132) |
| **Segment earnings (loss) attributable to TXNM** | $ 41,920 | $ 14,583 | $ (9,313) | $ 47,190 |
| **At March 31, 2024:** | | | | |
| **Total Assets** | $ 6,878,575 | $ 3,204,936 | $ 174,142 | $ 10,257,653 |
| **Goodwill** | $ 51,632 | $ 226,665 | $ — | $ 278,297 |

*Significant Segment Expenses*

Reflected above are certain additional categories of operating expenses that are regularly provided to the CODM. Cost of energy consists primarily of fuel and purchase power costs for PNM and costs charged by third-party transmission providers for TNMP. Administrative and general - direct expenses are those that are incurred directly by the segment while Administrative and general - corporate allocation are those costs that are incurred by the Corporate and Other segment and allocated to the utilities based on the nature of the cost incurred. Administrative and general - corporate allocation is eliminated in the Corporate and Other segment. Customer related expenses include meter reading, customer service, and bad debt expenses.

Table of Contents

**TXNM ENERGY, INC. AND SUBSIDIARIES**
**PUBLIC SERVICE COMPANY OF NEW MEXICO AND SUBSIDIARIES**
**TEXAS-NEW MEXICO POWER COMPANY AND SUBSIDIARIES**

**NOTES TO CONDENSED CONSOLIDATED FINANCIAL STATEMENTS**
(Unaudited)

## (3) Accumulated Other Comprehensive Income (Loss)

Information regarding accumulated other comprehensive income (loss) for the three months ended March 31, 2025 and 2024 is as follows:

| | Accumulated Other Comprehensive Income (Loss) | | | | |
|---|---|---|---|---|---|
| | PNM | | | Corporate and Other | TXNM |
| | Unrealized Gains on Available-for-Sale Debt Securities | Pension Liability Adjustment | Total | Fair Value Adjustment for Cash Flow Hedges | Total |
| | (In thousands) | | | | |
| **Balance at December 31, 2024** | $ 214 | $ (75,922) | $ (75,708) | $ — | $ (75,708) |
| Amounts reclassified from AOCI (pre-tax) | (137) | 1,374 | 1,237 | — | 1,237 |
| Income tax impact of amounts reclassified | 35 | (349) | (314) | — | (314) |
| Other OCI changes (pre-tax) | 267 | — | 267 | — | 267 |
| Income tax impact of other OCI changes | (68) | — | (68) | — | (68) |
| Net after-tax change | 97 | 1,025 | 1,122 | — | 1,122 |
| **Balance at March 31, 2025** | $ 311 | $ (74,897) | $ (74,586) | $ — | $ (74,586) |

| | | | | | |
|---|---|---|---|---|---|
| **Balance at December 31, 2023** | $ 10,652 | $ (77,157) | $ (66,505) | $ 3,665 | $ (62,840) |
| Amounts reclassified from AOCI (pre-tax) | (10,910) | 1,216 | (9,694) | 2,745 | (6,949) |
| Income tax impact of amounts reclassified | 2,771 | (309) | 2,462 | (697) | 1,765 |
| Other OCI changes (pre-tax) | 491 | — | 491 | 67 | 558 |
| Income tax impact of other OCI changes | (125) | — | (125) | (17) | (142) |
| Net after-tax change | (7,773) | 907 | (6,866) | 2,098 | (4,768) |
| **Balance at March 31, 2024** | $ 2,879 | $ (76,250) | $ (73,371) | $ 5,763 | $ (67,608) |

The Condensed Consolidated Statements of Earnings include pre-tax amounts reclassified from AOCI related to Unrealized Gains on Available-for-Sale Debt Securities in gains (losses) on investment securities, other AOCI changes related to Pension Liability Adjustment in other (deductions), and Fair Value Adjustment for Cash Flow Hedges in interest charges. The income tax impacts of all amounts reclassified from AOCI are included in income taxes in the Condensed Consolidated Statements of Earnings.

## (4) Earnings Per Share

Basic earnings per share is computed by dividing net earnings attributable to TXNM by the weighted average number of common shares outstanding during the period. Diluted earnings per share was computed by dividing net earnings attributable to TXNM by the diluted weighted average number of common shares outstanding during the period. Diluted earnings per share reflect the potential dilution that could occur if securities or other agreements to issue common stock were settled. TXNM applies the treasury stock method for restricted stock and the unsettled shares sold under forward sale agreements pursuant to the TXNM ATM Programs. The if-converted method is applied in determining the potential dilutive effect of the conversion of outstanding Convertible Notes.

Table of Contents

**TXNM ENERGY, INC. AND SUBSIDIARIES**
**PUBLIC SERVICE COMPANY OF NEW MEXICO AND SUBSIDIARIES**
**TEXAS-NEW MEXICO POWER COMPANY AND SUBSIDIARIES**

**NOTES TO CONDENSED CONSOLIDATED FINANCIAL STATEMENTS**
(Unaudited)

Information regarding the computation of earnings per share is as follows:

| | Three Months Ended March 31, | |
|---|---|---|
| | **2025** | **2024** |
| | (In thousands, except per share amounts) | |
| **Net Earnings Attributable to TXNM** | $ 8,923 | $ 47,190 |
| **Average Number of Common Shares:** | | |
| Outstanding during period | 92,659 | 90,200 |
| Vested awards of restricted stock | 358 | 283 |
| **Average Shares – Basic** | 93,017 | 90,483 |
| **Dilutive Effect of Common Stock Equivalents:** | | |
| Restricted stock | 44 | 31 |
| TXNM ATM Programs | 118 | — |
| **Average Shares – Diluted** | 93,179 | 90,514 |
| **Net Earnings Per Share of Common Stock:** | | |
| Basic | $ 0.10 | $ 0.52 |
| Diluted | $ 0.10 | $ 0.52 |

**(5) Electric Operating Revenues**

TXNM is an investor-owned holding company with two regulated utilities providing electricity and electric services in New Mexico and Texas. TXNM's electric utilities are PNM and TNMP. Additional information concerning electric operating revenue is contained in Note 4 of the Notes to Consolidated Financial Statements in the 2024 Annual Reports on Form 10-K.

**Accounts Receivable and Allowance for Credit Losses**

Accounts receivable consists primarily of trade receivables from customers. In the normal course of business, credit is extended to customers on a short-term basis. The Company estimates the allowance for credit losses on trade receivables based on historical experience and estimated default rates. Accounts receivable balances are reviewed monthly, adjustments to the allowance for credit losses are made as necessary and amounts that are deemed uncollectible are written off. In addition to the allowance for credit losses on trade receivables, the Company has evaluated other receivables for potential credit related losses. These balances include potential exposures for other non-retail utility services. In both the three months ended March 31, 2025 and 2024, there were no estimated credit losses related to these transactions.

**Contract Balances**

Performance obligations related to contracts with customers are typically satisfied when the energy is delivered and the customer or end-user utilizes the energy. Accounts receivable from customers represent amounts billed, including amounts under ARPs. For PNM, accounts receivable reflected on the Condensed Consolidated Balance Sheets, net of allowance for credit losses, includes $97.0 million at March 31, 2025 and $94.3 million at December 31, 2024 resulting from contracts with customers. All of TNMP's accounts receivable result from contracts with customers.

Contract assets are an entity's right to consideration in exchange for goods or services that the entity has transferred to a customer when that right is conditioned on something other than the passage of time (for example, the entity's future performance). Upon the completion of the Western Spirit Line, PNM entered into a Transmission Service Agreement ("TSA") with Pattern Wind under an incremental tariff rate approved by FERC. The terms of the agreement provide for a financing component that benefits the customer. As such, the revenue that PNM recognizes will be in excess of the consideration received at the beginning of the service term resulting in a contract asset. The balance of the contract asset is $34.4 million at March 31, 2025 and $32.0 million at December 31, 2024. This contract asset is presented in Other deferred charges on the Condensed Consolidated Balance Sheets.

Table of Contents

**TXNM ENERGY, INC. AND SUBSIDIARIES**
**PUBLIC SERVICE COMPANY OF NEW MEXICO AND SUBSIDIARIES**
**TEXAS-NEW MEXICO POWER COMPANY AND SUBSIDIARIES**

**NOTES TO CONDENSED CONSOLIDATED FINANCIAL STATEMENTS**
(Unaudited)

**Disaggregation of Revenues**

A disaggregation of revenues from contracts with customers by the type of customer is presented in the table below.

| | PNM | TNMP | TXNM Consolidated |
|---|---|---|---|
| **Three Months Ended March 31, 2025** | | (In thousands) | |
| **Electric Operating Revenues:** | | | |
| Contracts with customers: | | | |
| Retail electric revenue | | | |
| Residential | $ 124,554 | $ 48,781 | $ 173,335 |
| Commercial | 102,159 | 46,962 | 149,121 |
| Industrial | 33,632 | 11,546 | 45,178 |
| Public authority | 5,019 | 1,994 | 7,013 |
| Economy energy service | 11,236 | — | 11,236 |
| Transmission | 35,017 | 40,220 | 75,237 |
| Wholesale energy sales | 16,928 | — | 16,928 |
| Miscellaneous | 1,413 | 952 | 2,365 |
| Total revenues from contracts with customers | 329,958 | 150,455 | 480,413 |
| Alternative revenue programs | 2,146 | (1,043) | 1,103 |
| Other electric operating revenues | 1,276 | — | 1,276 |
| **Total Electric Operating Revenues** | $ 333,380 | $ 149,412 | $ 482,792 |
| **Three Months Ended March 31, 2024** | | | |
| **Electric Operating Revenues:** | | | |
| Contracts with customers: | | | |
| Retail electric revenue | | | |
| Residential | $ 120,385 | $ 41,495 | $ 161,880 |
| Commercial | 99,338 | 35,544 | 134,882 |
| Industrial | 24,769 | 9,856 | 34,625 |
| Public authority | 4,398 | 1,717 | 6,115 |
| Economy energy service | 7,563 | — | 7,563 |
| Transmission | 36,149 | 35,809 | 71,958 |
| Wholesale energy sales | 11,690 | — | 11,690 |
| Miscellaneous | 1,422 | 954 | 2,376 |
| Total revenues from contracts with customers | 305,714 | 125,375 | 431,089 |
| Alternative revenue programs | 1,906 | 3,387 | 5,293 |
| Other electric operating revenues | 495 | — | 495 |
| **Total Electric Operating Revenues** | $ 308,115 | $ 128,762 | $ 436,877 |

**(6) Variable Interest Entities**

How an enterprise evaluates and accounts for its involvement with variable interest entities focuses primarily on whether the enterprise has the power to direct the activities that most significantly impact the economic performance of a VIE. This evaluation requires continual reassessment of the primary beneficiary of a VIE. Additional information concerning PNM's VIEs is contained in Note 10 of the Notes to Consolidated Financial Statements in the 2024 Annual Reports on Form 10-K.

Table of Contents

**TXNM ENERGY, INC. AND SUBSIDIARIES**
**PUBLIC SERVICE COMPANY OF NEW MEXICO AND SUBSIDIARIES**
**TEXAS-NEW MEXICO POWER COMPANY AND SUBSIDIARIES**

**NOTES TO CONDENSED CONSOLIDATED FINANCIAL STATEMENTS**
(Unaudited)

**Valencia**

PNM has a PPA to purchase all of the electric capacity and energy from Valencia, a 155 MW natural gas-fired power plant near Belen, New Mexico, through May 2028. A third party built, owns, and operates the facility while PNM is the sole purchaser of the electricity generated. PNM is obligated to pay fixed operation and maintenance and capacity charges in addition to variable operation and maintenance charges under this PPA. For the three months ended March 31, 2025 and 2024, PNM paid $4.9 million and $5.1 million for fixed charges and $0.5 million and $0.1 million for variable charges. PNM does not have any other financial obligations related to Valencia. The assets of Valencia can only be used to satisfy its obligations and creditors of Valencia do not have any recourse against PNM's assets. During the term of the PPA, PNM has the option, under certain conditions, to purchase and own up to 50% of the plant or the VIE. The PPA specifies that the purchase price would be the greater of 50% of book value reduced by related indebtedness or 50% of fair market value.

PNM sources fuel for the plant, controls when the facility operates through its dispatch, and receives the entire output of the plant, which factors directly and significantly impact the economic performance of Valencia. Therefore, PNM has concluded that the third-party entity that owns Valencia is a VIE and that PNM is the primary beneficiary of the entity since PNM has the power to direct the activities that most significantly impact the economic performance of Valencia and will absorb the majority of the variability in the cash flows of the plant. As the primary beneficiary, PNM consolidates Valencia in its financial statements. Accordingly, the assets, liabilities, operating expenses, and cash flows of Valencia are included in the Condensed Consolidated Financial Statements of PNM although PNM has no legal ownership interest or voting control of the VIE. The assets and liabilities of Valencia are set forth below and are not shown separately on the Condensed Consolidated Balance Sheets. The owner's equity and net income of Valencia are considered attributable to non-controlling interest.

Summarized financial information for Valencia is as follows:

**Results of Operations**

| | Three Months Ended March 31, | |
|---|---|---|
| | **2025** | **2024** |
| | (In thousands) | |
| Operating revenues | $ 5,422 | $ 5,189 |
| Operating expenses | 1,680 | 2,145 |
| Earnings attributable to non-controlling interest | $ 3,742 | $ 3,044 |

**Financial Position**

| | **March 31, 2025** | **December 31, 2024** |
|---|---|---|
| | (In thousands) | |
| Current assets | $ 3,514 | $ 3,095 |
| Net property, plant, and equipment | 43,700 | 44,411 |
| Total assets | 47,214 | 47,506 |
| Current liabilities | 842 | 606 |
| Owners' Equity – Non-controlling Interest | $ 46,372 | $ 46,900 |

**Westmoreland San Juan Mining, LLC**

As discussed in the subheading Coal Supply in Note 11, PNM and Westmoreland San Juan Mining, LLC ("WSJ LLC"), a subsidiary of Westmoreland Mining Holdings, LLC have agreements under which CCR disposal and mine reclamation services for SJGS will be provided.

TXNM issued $30.3 million in letters of credit to facilitate the issuance of reclamation bonds. The letters of credit support results in TXNM having a variable interest in WSJ LLC since TXNM is subject to possible loss in the event performance by TXNM is required under the letters of credit support. TXNM considers the possibility of loss under the letters of credit support to be remote since the purpose of posting the bonds is to provide assurance that WSJ LLC performs the required reclamation of the mine site in accordance with applicable regulations and the reclamation services agreement provides WSJ LLC the ability to recover the cost of reclamation. Additionally, much of the mine reclamation activities have been and

Table of Contents

**TXNM ENERGY, INC. AND SUBSIDIARIES**
**PUBLIC SERVICE COMPANY OF NEW MEXICO AND SUBSIDIARIES**
**TEXAS-NEW MEXICO POWER COMPANY AND SUBSIDIARIES**

**NOTES TO CONDENSED CONSOLIDATED FINANCIAL STATEMENTS**
(Unaudited)

will continue to be performed after the SJGS CSA expired on September 30, 2022. As discussed in Note 11, each of the SJGS participants has established and actively fund trusts to meet future reclamation obligations.

WSJ LLC is considered a VIE. TXNM's analysis of its arrangements with WSJ LLC concluded that WSJ LLC has the ability to direct its reclamation services, which are the factors that most significantly impact the economic performance of WSJ LLC. Other than PNM being able to monitor reclamation activities, the reclamation services were solely under the control of WSJ LLC, including developing reclamation plans, hiring of personnel, and incurring operating and maintenance expenses. Neither TXNM nor PNM has any ability to direct or influence the reclamation activities. PNM's involvement through the reclamation services agreement is a protective right rather than a participating right, and WSJ LLC still has the power to direct the activities that most significantly impact the economic performance of WSJ LLC. If WSJ LLC performs reclamation services more efficiently than anticipated, its economic performance will improve. Conversely, if WSJ LLC does not perform reclamation services as efficiently as anticipated, its economic performance will be negatively impacted. Accordingly, TXNM believes WSJ LLC is the primary beneficiary and, therefore, WSJ LLC is not consolidated by either TXNM or PNM. The amounts outstanding under the letters of credit support continue to be TXNM's maximum exposure to loss from the VIE at March 31, 2025.

**ETBC I**

ETBC I is a wholly-owned, special purpose subsidiary of PNM that was formed in August 2023 for the limited purpose of purchasing, owning, and administering energy transition property, issuing securitized bonds, and performing related activities authorized by the NMPRC. On November 15, 2023, ETBC I issued the ETBC I Securitized Bonds and used the proceeds to purchase energy transition property from PNM. The energy transition property purchased includes the right to impose, bill, collect, and adjust a non-bypassable energy transition charge from all PNM retail customers until the ETBC I Securitized Bonds are paid in full and all allowed financing costs have been recovered. The ETBC I Securitized Bonds are secured by the energy transition property, and cash collections from the Energy Transition Charges are the sole source of funds to satisfy the debt obligation. The bondholders have no recourse to PNM.

PNM acts as the servicer of the energy transition property on behalf of ETBC I and is responsible for metering, calculating, billing, and collecting the Energy Transition Charges. On behalf of ETBC I, PNM is required to remit all collections of the Energy Transition Charges to the trustee for the ETBC I Securitized Bonds. PNM has the power to direct the activities that most significantly impact the economic performance of ETBC I and will absorb the majority of the variability in the cash flows of the entity. As the primary beneficiary, PNM consolidates ETBC I in its financial statements. Accordingly, the assets, liabilities, operating expenses, and cash flows of ETBC I are included in the Consolidated Financial Statements of PNM.

The following tables summarize the impact of ETBC I on PNM's Financial Statements:

**Results of Operations**

| | Three Months Ended March 31, | |
|---|---|---|
| | **2025** | **2024** |
| | (In thousands) | |
| Electric Operating Revenues | $ 6,799 | $ 5,946 |
| Depreciation and amortization | 1,700 | 821 |
| Interest Charges | 4,971 | 5,025 |
| Other | 128 | 100 |
| Net Earnings | $ — | $ — |

Table of Contents

**TXNM ENERGY, INC. AND SUBSIDIARIES**
**PUBLIC SERVICE COMPANY OF NEW MEXICO AND SUBSIDIARIES**
**TEXAS-NEW MEXICO POWER COMPANY AND SUBSIDIARIES**

**NOTES TO CONDENSED CONSOLIDATED FINANCIAL STATEMENTS**
(Unaudited)

| | Financial Position | |
|---|---|---|
| | March 31, 2025 | December 31, 2024 |
| | (In thousands) | |
| Regulatory assets - Current | $ — | $ — |
| Restricted cash (included in Other current assets) | 8,111 | 15,838 |
| Restricted cash (included in Other deferred charges) | 1,729 | 1,748 |
| Securitized Cost (included in Regulatory assets - Deferred) | 334,379 | 336,079 |
| Current installments of long-term debt | 7,102 | 6,907 |
| Accrued interest and taxes | 2,460 | 7,452 |
| Regulatory liabilities - Current | 5,835 | 6,975 |
| Long-term Debt | 328,152 | 331,726 |

## (7) Fair Value of Derivative and Other Financial Instruments

Additional information concerning energy related derivative contracts and other financial instruments is contained in Note 9 of the Notes to Consolidated Financial Statements in the 2024 Annual Reports on Form 10-K.

Fair value is defined as the price that would be received for an asset or paid to transfer a liability (an exit price) in the principal or most advantageous market for the asset or liability in an orderly transaction between market participants on the measurement date. Fair value is based on current market quotes as available and is supplemented by modeling techniques and assumptions made by the Company to the extent quoted market prices or volatilities are not available. External pricing input availability varies based on commodity location, market liquidity, and term of the agreement. Valuations of derivative assets and liabilities take into account nonperformance risk, including the effect of counterparties' and the Company's credit risk. The Company regularly assesses the validity and availability of pricing data for its derivative transactions. Although the Company uses its best judgment in estimating the fair value of these instruments, there are inherent limitations in any estimation technique.

### Energy Related Derivative Contracts

**Overview**

The primary objective for the use of commodity derivative instruments, including energy contracts, options, swaps, and futures, is to manage price risk associated with forecasted purchases of energy and fuel used to generate electricity, as well as managing anticipated generation capacity in excess of forecasted demand from existing customers. PNM's energy related derivative contracts manage commodity risk. TNMP does not enter into energy related derivative contracts.

PNM enters into agreements for the purchase and sale of power from third parties. As PNM is required to meet the demand and energy needs of its customers, the Company may be exposed to market risk for the needs of its customers not covered under the FPPAC.

PNM's operations are managed primarily through a net asset-backed strategy, whereby PNM's aggregate net open forward contract position is covered by its forecasted excess generation capabilities or market purchases. PNM could be exposed to market risk if its generation capabilities were to be disrupted or if its load requirements were to be greater than anticipated. If all or a portion of load requirements were required to be covered as a result of such unexpected situations, commitments would have to be met through market purchases.

**Commodity Risk**

Marketing and procurement of energy often involve market risks associated with managing energy commodities and establishing positions in the energy markets, primarily on a short-term basis. PNM routinely enters into various derivative instruments such as forward contracts, option agreements, and price basis swap agreements to economically hedge price and volume risk on power commitments and fuel requirements and to minimize the effect of market fluctuations. PNM monitors the market risk of its commodity contracts in accordance with approved risk and credit policies.

Table of Contents

**TXNM ENERGY, INC. AND SUBSIDIARIES**
**PUBLIC SERVICE COMPANY OF NEW MEXICO AND SUBSIDIARIES**
**TEXAS-NEW MEXICO POWER COMPANY AND SUBSIDIARIES**

**NOTES TO CONDENSED CONSOLIDATED FINANCIAL STATEMENTS**
(Unaudited)

**Accounting for Derivatives**

Under derivative accounting and related rules for energy contracts, PNM accounts for its various instruments for the purchase and sale of energy, which meet the definition of a derivative, based on PNM's intent. During the three months ended March 31, 2025 and the year ended December 31, 2024, PNM was not hedging its exposure to the variability in future cash flows from commodity derivatives through designated cash flow hedges. The derivative contracts recorded at fair value that do not qualify or are not designated for cash flow hedge accounting are classified as economic hedges. Economic hedges are defined as derivative instruments, including long-term power agreements, used to economically hedge generation assets, purchased power and fuel costs, and customer load requirements. Changes in the fair value of economic hedges are reflected in Operating income on the Condensed Consolidated Statements of Earnings and are presented in Electric Operating Revenues and Cost of energy according to the intent of the hedge. PNM also uses such instruments under an NMPRC-approved hedging plan to manage fuel and purchased power costs related to customers covered by its FPPAC. Changes in the fair value of instruments covered by its FPPAC are recorded as Regulatory assets and Regulatory liabilities on the Condensed Consolidated Balance Sheets. The cash impacts of settled derivatives are recorded as operating activities or financing activities on the Condensed Consolidated Statement of Cash Flows consistent with the classification of the hedged transaction. PNM has no trading transactions.

**Commodity Derivatives**

In November 2024 and February 2025, PNM entered into agreements to purchase a total of 225 MW from July 1, 2025 through August 31, 2025 in order to ensure that customer demand during the 2025 summer peak load period will be met. In 2024, PNM had existing agreements to purchase a total of 150 MW from July 1, 2024 through July 31, 2024 and 100 MW from August 1, 2024 through August 30, 2024. All of these agreements are related to customers covered by the FPPAC and are reflected in the commodity derivative table for each of the periods presented below.

Additionally, in April 2025, PNM entered into an agreement to purchase an additional 25 MW to cover the period from July 1, 2025 through August 31, 2025 although the contract has not yet become active as of March 31, 2025.

PNM's commodity derivative instruments that are recorded at fair value, all of which are accounted for as economic hedges and considered Level 2 fair value measurements, are presented in the following line items on the Condensed Consolidated Balance Sheets:

| | Economic Hedges | |
|---|---|---|
| | March 31, 2025 | December 31, 2024 |
| | (In thousands) | |
| Other current assets | $ — | $ — |
| Other current liabilities | (6,372) | (5,737) |
| Net | $ (6,372) | $ (5,737) |

Certain of PNM's commodity derivative instruments in the above table are subject to master netting agreements whereby assets and liabilities could be offset in the settlement process. PNM does not offset fair value and cash collateral for derivative instruments under master netting arrangements and the above table reflects the gross amounts of fair value assets and liabilities for commodity derivatives.

At March 31, 2025 and December 31, 2024, PNM had no commodity derivative instruments, considered economic hedges, that did not pertain to the NMPRC-approved hedging plan discussed above. Changes in fair value had no impact on PNM's net earnings during the three months ended March 31, 2025 and 2024.

Commodity contract volume positions are presented in MMBTU for gas related contracts and in MWh for power related contracts. The table below presents PNM's net buy (sell) volume positions:

| | Economic Hedges | |
|---|---|---|
| | MMBTU | MWh |
| March 31, 2025 | — | 170,500 |
| December 31, 2024 | — | 89,900 |

Table of Contents

**TXNM ENERGY, INC. AND SUBSIDIARIES**
**PUBLIC SERVICE COMPANY OF NEW MEXICO AND SUBSIDIARIES**
**TEXAS-NEW MEXICO POWER COMPANY AND SUBSIDIARIES**

**NOTES TO CONDENSED CONSOLIDATED FINANCIAL STATEMENTS**
(Unaudited)

PNM has contingent requirements to provide collateral under commodity contracts having an objectively determinable collateral provision that are in net liability positions and are not fully collateralized with cash. In connection with managing its commodity risks, PNM enters into master agreements with certain counterparties. If PNM is in a net liability position under an agreement, some agreements provide that the counterparties can request collateral if PNM's credit rating is downgraded; other agreements provide that the counterparty may request collateral to provide it with "adequate assurance" that PNM will perform; and others have no provision for collateral.

The table below presents information about PNM's contingent requirements to provide collateral under certain commodity contracts having an objectively determinable collateral provision, that are in net liability positions, and that are not fully collateralized with cash. Contractual liability represents those commodity derivative contracts recorded at fair value on the balance sheet, determined on an individual contract basis without offsetting amounts for individual contracts that are in an asset position and could be offset under master netting agreements with the same counterparty. Cash collateral posted under these contracts does not reflect letters of credit under the Company's revolving credit facilities that may have been issued as collateral. Net exposure is the net contractual liability for all contracts, including those designated as normal purchase and normal sale, offset by existing collateral and by any offsets available under master netting agreements, including both assets and liability positions.

| Contingent Feature - Credit Rating | Contractual Liability | Existing Cash Collateral | Net Exposure |
|---|---|---|---|
| | | (In thousands) | |
| March 31, 2025 | $ 6,372 | $ — | $ 6,372 |
| December 31, 2024 | $ 5,737 | $ — | $ 5,737 |

At March 31, 2025 and December 31, 2024, PNM had no amounts recognized for the legal right to reclaim cash collateral. However, amounts posted as cash collateral under margin arrangements were zero at March 31, 2025 and $0.1 million at December 31, 2024. These amounts are included in other current assets on the Condensed Consolidated Balance Sheets. At both March 31, 2025 and December 31, 2024, there were no obligations to return cash collateral.

**Non-Derivative Financial Instruments**

The carrying amounts reflected on the Condensed Consolidated Balance Sheets approximate fair value for cash, receivables, and payables due to the short period of maturity. Investment securities are carried at fair value. Investment securities consist of PNM assets held in the NDT for its share of decommissioning costs of PVNGS, a trust for PNM's share of decommissioning costs at SJGS, and trusts for PNM's share of final reclamation costs related to the coal mines serving SJGS and Four Corners. See Note 11. At March 31, 2025 and December 31, 2024, the fair value of investment securities included $384.9 million and $384.6 million for the NDT, $6.1 million and $8.2 million for the SJGS decommissioning trust, and $79.2 million and $82.7 million for the coal mine reclamation trusts.

PNM records a realized loss as an impairment for any available-for-sale debt security that has a fair value that is less than its carrying value. At March 31, 2025 and December 31, 2024, PNM had no available-for-sale debt securities for which carrying value exceeded fair value, where the impairments were considered to be "other than temporary" and included in AOCI rather than recognized in earnings. All gains and losses resulting from sales and changes in the fair value of equity securities are recognized immediately in earnings. Gains and losses recognized on the Condensed Consolidated Statements of Earnings related to investment securities in the NDT, SJGS decommissioning, and coal mine reclamation trusts are presented in the following table:

| | Three Months Ended March 31, | |
|---|---|---|
| | 2025 | 2024 |
| | (In thousands) | |
| Equity securities: | | |
| Net gains from equity securities sold | $ 6,992 | $ 9,871 |
| Net (losses) from equity securities still held | (8,243) | (1,205) |
| Total net gains (losses) on equity securities | (1,251) | 8,666 |
| Available-for-sale debt securities: | | |
| Net gains on debt securities | 10 | 9,332 |
| Net gains (losses) on investment securities | $ (1,241) | $ 17,998 |

Table of Contents

**TXNM ENERGY, INC. AND SUBSIDIARIES**
**PUBLIC SERVICE COMPANY OF NEW MEXICO AND SUBSIDIARIES**
**TEXAS-NEW MEXICO POWER COMPANY AND SUBSIDIARIES**

**NOTES TO CONDENSED CONSOLIDATED FINANCIAL STATEMENTS**
(Unaudited)

The proceeds and gross realized gains and losses on the disposition of securities held in the NDT, SJGS decommissioning trust, and coal mine reclamation trusts are shown in the following table. Realized gains and losses are determined by specific identification of costs of securities sold. Gross realized losses shown below exclude the (increase)/decrease in realized impairment losses of zero and $13.4 million for the three months ended March 31, 2025 and 2024.

| | Three Months Ended March 31, | |
|---|---|---|
| | 2025 | 2024 |
| | (In thousands) | |
| Proceeds from sales | $ 90,103 | $ 302,510 |
| Gross realized gains | 7,683 | 13,679 |
| Gross realized (losses) | (691) | (7,912) |

At March 31, 2025, the available-for-sale debt securities held by PNM, had the following final maturities:

| | Fair Value |
|---|---|
| | (In thousands) |
| Within 1 year | $ 47,960 |
| After 1 year through 5 years | 6,724 |
| | $ 54,684 |

**Fair Value Disclosures**

The Company determines the fair values of its derivative and other financial instruments based on the hierarchy that requires an entity to maximize the use of observable inputs and minimize the use of unobservable inputs when measuring fair value. There are three levels of inputs that may be used to measure fair value. Level 1 inputs are quoted prices (unadjusted) in active markets for identical assets or liabilities that the reporting entity has the ability to access at the measurement date. Level 2 inputs are inputs other than quoted prices included within Level 1 that are observable for the asset or liability, either directly or indirectly. Level 3 inputs are unobservable inputs for the asset or liability.

For investment securities, Level 2 fair values are provided by fund managers utilizing a pricing service. For Level 2 fair values, the pricing provider predominantly uses the market approach using bid side market values based upon a hierarchy of information for specific securities or securities with similar characteristics. Fair values of Level 2 investments in mutual funds are equal to net asset value (“NAV”). For commodity derivatives, Level 2 fair values are determined based on market observable inputs, which are validated using multiple broker quotes, including forward price, volatility, and interest rate curves to establish expectations of future prices. Credit valuation adjustments are made for estimated credit losses based on the overall exposure to each counterparty. For the Company’s long-term debt, Level 2 fair values are provided by an external pricing service. The pricing service primarily utilizes quoted prices for similar debt in active markets when determining fair value. Management of the Company independently verifies the information provided by pricing services. Uncategorized investments include common/collective investment trusts, which are measured at NAV at the end of each reporting period. Audited financial statements are received for each fund and reviewed by the Company annually. Fair value for these collective investment trusts is measured using a practical expedient provided under GAAP that allows the NAV per share to be used as fair value for investments in certain entities that do not have readily determinable fair values and are considered to be investment companies. Investments valued using this practical expedient are not required to be presented within the GAAP fair value hierarchy.

Table of Contents

**TXNM ENERGY, INC. AND SUBSIDIARIES**
**PUBLIC SERVICE COMPANY OF NEW MEXICO AND SUBSIDIARIES**
**TEXAS-NEW MEXICO POWER COMPANY AND SUBSIDIARIES**

**NOTES TO CONDENSED CONSOLIDATED FINANCIAL STATEMENTS**
(Unaudited)

Items recorded at fair value by PNM on the Condensed Consolidated Balance Sheets are presented below by level of the fair value hierarchy along with gross unrealized gains on investments in available-for-sale debt securities:

| | | GAAP Fair Value Hierarchy | | |
|---|---|---|---|---|
| | Total | Quoted Prices in Active Markets for Identical Assets (Level 1) | Significant Other Observable Inputs (Level 2) | Unrealized Gains |
| | | (In thousands) | | |
| **March 31, 2025** | | | | |
| Cash and cash equivalents | $ 103,642 | $ 103,642 | $ — | |
| Equity securities: | | | | |
| Corporate stocks, common | 129,919 | 129,919 | — | |
| Mutual funds and other | 139,877 | 139,877 | — | |
| Available-for-sale debt securities: | | | | |
| U.S. government | 40,999 | 40,999 | — | $ 321 |
| Corporate and other | 13,685 | — | 13,685 | 133 |
| Investments categorized within the fair value hierarchy | $ 428,122 | $ 414,437 | $ 13,685 | $ 454 |
| Uncategorized Collective Investment Trust | 42,057 | | | |
| Total investment securities | $ 470,179 | | | |
| **December 31, 2024** | | | | |
| Cash and cash equivalents | $ 150,745 | $ 150,745 | $ — | |
| Equity securities: | | | | |
| Corporate stocks, common | 134,553 | 134,553 | — | |
| Mutual funds and other | 135,779 | 135,779 | — | |
| Available-for-sale debt securities: | | | | |
| U.S. government | 25,148 | 25,148 | — | $ 202 |
| Municipals | — | — | — | — |
| Corporate and other | 7,196 | — | 7,196 | 122 |
| Investments categorized within the fair value hierarchy | $ 453,421 | $ 446,225 | $ 7,196 | $ 324 |
| Uncategorized Collective Investment Trust | 22,103 | | | |
| Total investment securities | $ 475,524 | | | |

Table of Contents

**TXNM ENERGY, INC. AND SUBSIDIARIES**
**PUBLIC SERVICE COMPANY OF NEW MEXICO AND SUBSIDIARIES**
**TEXAS-NEW MEXICO POWER COMPANY AND SUBSIDIARIES**

**NOTES TO CONDENSED CONSOLIDATED FINANCIAL STATEMENTS**
(Unaudited)

The carrying amounts and fair values of long-term debt, all of which are considered Level 2 fair value measurements and are not recorded at fair value on the Condensed Consolidated Balance Sheets, are presented below:

| | Carrying Amount | Fair Value |
|---|---|---|
| **March 31, 2025** | (In thousands) | |
| TXNM | $ 5,254,571 | $ 5,135,199 |
| PNM | 2,651,558 | 2,499,721 |
| TNMP | 1,603,187 | 1,486,423 |
| **December 31, 2024** | | |
| TXNM | $ 4,923,368 | $ 4,706,076 |
| PNM | 2,459,592 | 2,284,362 |
| TNMP | 1,464,079 | 1,324,194 |

The carrying amount and fair value of the Company's other investments presented on the Condensed Consolidated Balance Sheets are not material and not shown in the above table.

**(8) Stock-Based Compensation**

TXNM has various stock-based compensation programs, which provide restricted stock awards, that are performance-based and time-based, under the Performance Equity Plan ("PEP"). Although certain PNM and TNMP employees are eligible to participate in the TXNM plans, PNM and TNMP do not have separate employee stock-based compensation plans. Performance stock awards awarded under the PEP are awarded for a three-year, overlapping performance period. Performance stock awards with performance periods ending in 2024 and 2025 do not include market targets. Performance stock awards with performance periods ending after 2025 are subject to achieving both performance and market targets. Other awards of restricted stock are only subject to time-based vesting requirements. Additional information concerning stock-based compensation under the PEP is contained in Note 12 of the Notes to Consolidated Financial Statements in the 2024 Annual Reports on Form 10-K.

Restricted stock under the PEP refers to awards of stock subject to vesting, performance, or market conditions rather than to shares with contractual post-vesting restrictions. Generally, the awards vest ratably over three years from the grant date of the award. However, awards with performance or market conditions vest upon satisfaction of those conditions. In addition, plan provisions provide that upon retirement, participants become 100% vested in certain stock awards. The vesting period for awards of restricted stock to non-employee members of the Board is one-year.

The stock-based compensation expense related to restricted stock awards without performance or market conditions to participants that are retirement eligible on the grant date is recognized immediately at the grant date and is not amortized. Compensation expense for other such awards is amortized over the shorter of the requisite vesting period or the period until the participant becomes retirement eligible. Compensation expense for performance-based shares is recognized ratably over the performance period as required service is provided and is adjusted periodically to reflect the level of achievement expected to be attained. Compensation expense related to market-based shares is recognized ratably over the measurement period, regardless of the actual level of achievement, provided the employees meet their service requirements. At March 31, 2025, TXNM had unrecognized expense related to stock awards of $8.2 million, which is expected to be recognized over an average of 2.3 years.

The grant date fair value for restricted stock and stock awards with internal TXNM performance targets is determined based on the market price of TXNM common stock on the date of the agreements reduced by the present value of future dividends that will not be received prior to vesting. The grant date fair value is applied to the total number of shares that are anticipated to vest, although the number of performance shares that ultimately vest cannot be determined until after the performance periods end. The grant date fair value of stock awards with market targets were determined using Monte Carlo simulation models, which provide grant date fair values that include an expectation of the number of shares to vest at the end of the measurement period.

Table of Contents

**TXNM ENERGY, INC. AND SUBSIDIARIES**
**PUBLIC SERVICE COMPANY OF NEW MEXICO AND SUBSIDIARIES**
**TEXAS-NEW MEXICO POWER COMPANY AND SUBSIDIARIES**

**NOTES TO CONDENSED CONSOLIDATED FINANCIAL STATEMENTS**
(Unaudited)

The following table summarizes the weighted-average assumptions used to determine the awards grant date fair value:

| | Three Months Ended March 31, | |
|---|---|---|
| **Restricted Shares and Performance Based Shares** | **2025** | **2024** |
| Expected quarterly dividends per share | $ 0.4075 | $ 0.3875 |
| Risk-free interest rate | 4.00 % | 4.27 % |
| **Market-Based Shares** | | |
| Dividend yield | 3.12 % | 4.21% |
| Expected volatility | 15.67 % | 13.09% |
| Risk-free interest rate | 4.12 % | 4.31% |

The following table summarizes activity in restricted stock awards, including performance-based and market-based shares for the three months ended March 31, 2025:

| | Restricted Stock | |
|---|---|---|
| | **Shares** | **Weighted-Average Grant Date Fair Value** |
| **Outstanding at December 31, 2024** | 241,237 | $ 37.05 |
| Granted | 148,752 | 47.02 |
| Released | (123,323) | 41.77 |
| Forfeited | (4,002) | 33.89 |
| **Outstanding at March 31, 2025** | 262,664 | $ 40.53 |

Included, as granted and released, in the table above are 50,923 previously awarded performance-based shares that were earned for the 2022 - 2024 performance measurement period and ratified by the Board in February 2025 (based upon achieving targets at above “threshold,” below “target” levels). Excluded from the table above are 145,219, 217,739, and 200,500 shares for the three-year performance periods ending in 2025, 2026, and 2027 that will be awarded if all performance and market criteria are achieved at maximum levels and all executives remain eligible.

On December 4, 2023, the Company entered into a retention agreement with its President and Chief Operating Officer under which he would receive a retention bonus of $1.0 million to be paid in increments beginning in December 2023 and continuing each December until 2025. On April 8, 2024, pursuant to the retention agreement, the Board elected to convert the unvested portion of the retention bonus of $0.8 million into restricted stock rights whereby each share of restricted stock is equal to one share of Company common stock as of the first trading day after expiration of the then current black-out period. On May 3, 2024, subsequent to the expiration of the black-out period, 19,851 restricted stock rights were awarded that will vest in accordance with the original terms of the retention agreement.

On September 16, 2024, in connection with a one-time sign-on equity grant, the Company’s newly appointed General Counsel, Senior Vice President Regulatory and Public Policy, and Corporate Secretary was awarded 9,300 shares of restricted stock, of which 50% vested immediately and the remaining 50% will vest on the first anniversary of his start date, subject to continued employment through the vesting date.

The following table provides additional information concerning restricted stock activity, including performance-based and market-based shares:

| | Three Months Ended March 31, | |
|---|---|---|
| **Restricted Stock** | **2025** | **2024** |
| Weighted-average grant date fair value | $ 47.02 | $ 32.43 |
| Total fair value of restricted shares that vested (in thousands) | $ 6,101 | $ 5,395 |

Table of Contents

**TXNM ENERGY, INC. AND SUBSIDIARIES**
**PUBLIC SERVICE COMPANY OF NEW MEXICO AND SUBSIDIARIES**
**TEXAS-NEW MEXICO POWER COMPANY AND SUBSIDIARIES**

**NOTES TO CONDENSED CONSOLIDATED FINANCIAL STATEMENTS**
(Unaudited)

## (9) Financing

The Company's financing strategy includes both short-term and long-term borrowings. The Company utilizes short-term revolving credit facilities, as well as cash flows from operations, to provide funds for both construction and operating expenditures. Depending on market and other conditions, the Company will periodically sell long-term debt, enter into term loan arrangements, or equity arrangements and use the proceeds to reduce borrowings under the revolving credit facilities or refinance other debt. Each of the Company's revolving credit facilities, term loans, and other debt agreements contains a single financial covenant that requires the maintenance of a debt-to-capitalization ratio. For the TXNM agreements, this ratio must be maintained at less than or equal to 70%, and for the PNM and TNMP agreements, this ratio must be maintained at less than or equal to 65%. The Company's revolving credit facilities, term loans, and other debt agreements generally also contain customary covenants, events of default, cross-default provisions, and change-of-control provisions. PNM must obtain NMPRC approval for any financing transaction having a maturity of more than 18 months. In addition, PNM files its annual informational financing filing and short-term financing plan with the NMPRC. Additional information concerning financing activities is contained in Note 7 of the Notes to Consolidated Financial Statements in the 2024 Annual Reports on Form 10-K.

On February 28, 2025, TXNM filed a shelf registration that provides for the issuance of various types of debt and equity securities. The TXNM shelf registration statement expires in February 2028.

**Financing Activities**

On April 23, 2025, PNM entered into an agreement (the "PNM 2025 Note Purchase Agreement") with institutional investors for the sale and issuance of $300.0 million aggregate principal amount of two series of SUNs (the "PNM 2025 SUNs") offered in private placement transactions. The PNM 2025 SUNs were issued on April 23, 2025. PNM issued $125.0 million of the PNM 2025 SUNs at 5.75%, due June 1, 2032, and another $175.0 million at 6.13%, due June 1, 2037. PNM used proceeds from the PNM 2025 SUNs for the repayment of existing indebtedness, funding of capital expenditures, and general corporate purposes. The PNM 2025 Note Purchase Agreement includes the customary covenants discussed above. In the event of a change of control, PNM will be required to offer to prepay the PNM 2025 SUNs at par. PNM has the right to redeem any or all of the PNM 2025 SUNs prior to their maturities, subject to payment of a customary make-whole premium.

On February 14, 2025, TNMP entered into an agreement (the "TNMP 2025 Bond Purchase Agreement") with institutional investors for the sale of $140.0 million aggregate principal amount of its 5.19% TNMP first mortgage bonds (the "TNMP 2025 Bonds") offered in private placement transactions. TNMP issued all $140.0 million at a 5.19% interest rate, due April 1, 2031. The proceeds were used to repay borrowings under the TNMP Revolving Credit Facility, for funding of capital expenditures, and for other corporate purposes. The TNMP 2025 Bonds are subject to continuing compliance with the representations, warranties, and covenants set forth in the supplemental indentures governing the TNMP 2025 Bonds. The terms of the supplemental indentures governing the TNMP 2025 Bonds include the customary covenants discussed above. In the event of a change of control, TNMP will be required to offer to prepay the TNMP 2025 Bonds at par. TNMP has the right to redeem any or all of the TNMP 2025 Bonds prior to their maturity, subject to payment of a customary make-whole premium.

On January 21, 2025, PNM entered into a $195.0 million term loan agreement (the "PNM 2025 Term Loan"), among PNM, the lenders party thereto and Canadian Imperial Bank of Commerce, New York Branch, as administrative agent. PNM used the proceeds of the PNM 2025 Term Loan to repay borrowings under the PNM Revolving Credit Facility, the PNM New Mexico Credit Facility, and for general corporate purposes. The PNM 2025 Term Loan bears interest at a variable rate, which was 5.32% at March 31, 2025, and must be repaid on or before July 21, 2026.

On March 28, 2024, TNMP entered into an agreement (the "TNMP 2024 Bond Purchase Agreement") with institutional investors for the sale of $285.0 million aggregate principal amount of four series of TNMP first mortgage bonds (the "TNMP 2024 Bonds") offered in private placement transactions. TNMP issued the first two series on March 28, 2024, consisting of $32.0 million at a 5.26% interest rate, due March 28, 2029, and $85.0 million at a 5.55% interest rate, due March 28, 2036. The third and fourth series were issued on July 1, 2024, consisting of $40.0 million at a 5.65% interest rate, due July 1, 2039, and $128.0 million at a 5.79% interest rate, due July 1, 2054. The proceeds were used to repay existing debt, including the $80.0 million of 4.03% TNMP FMBs that were due July 2024 and borrowings under the TNMP Revolving Credit Facility, for funding of capital expenditures, and for other corporate purposes. The TNMP 2024 Bonds are subject to continuing compliance with the representations, warranties, and covenants set forth in the supplemental indentures governing the TNMP 2024 Bonds. The terms of the supplemental indentures governing the TNMP 2024 Bonds include the customary covenants discussed above. In the event of certain changes of control of TXNM or TNMP, TNMP will be required to offer to prepay the TNMP 2024

Table of Contents

**TXNM ENERGY, INC. AND SUBSIDIARIES**
**PUBLIC SERVICE COMPANY OF NEW MEXICO AND SUBSIDIARIES**
**TEXAS-NEW MEXICO POWER COMPANY AND SUBSIDIARIES**

**NOTES TO CONDENSED CONSOLIDATED FINANCIAL STATEMENTS**
(Unaudited)

Bonds at par. TNMP has the right to redeem any or all of the TNMP 2024 Bonds prior to their maturity, subject to payment of a customary make-whole premium.

At March 31, 2025, variable interest rates were 5.37% on the TXNM 2021 Delayed-Draw Term Loan that matures in May 2025, 5.77% on the TXNM 2023 Term Loan that matures in June 2026, 5.32% on the PNM 2024 Term Loan that matures in November 2025, and 5.32% on the PNM 2025 Term Loan that matures in July 2026.

**Short-term Debt and Liquidity**

As of March 31, 2025, the TXNM Revolving Credit Facility had a financing capacity of $300.0 million and the PNM Revolving Credit Facility had a financing capacity of $400.0 million. Each of these facilities matures on March 30, 2029 and contains two one-year extension options that, if exercised, would extend the maturity to March 2031, subject to approval by a majority of the lenders. PNM also has the $40.0 million PNM New Mexico Credit Facility with a maturity of May 20, 2026. As of March 31, 2025, the TNMP Revolving Credit Facility has a capacity of $200.0 million and is secured by $200.0 million aggregate principal amount of TNMP first mortgage bonds and has a maturity of March 30, 2029, with two one-year extension options that, if exercised, would extend the maturity to March 2031, subject to approval by a majority of the lenders. Variable interest rates under the TXNM, PNM, and TNMP revolving credit facilities are based on SOFR. Short-term debt outstanding consists of:

| | March 31, 2025 | | December 31, 2024 | |
|---|---|---|---|---|
| | Balance Outstanding | Weighted Average Interest Rate | Balance Outstanding | Weighted Average Interest Rate |
| | (In thousands) | | (In thousands) | |
| PNM: | | | | |
| PNM Revolving Credit Facility | $ 258,300 | 5.67% | $ 323,800 | 5.73% |
| PNM New Mexico Credit Facility | 40,000 | 5.67 | 40,000 | 5.81 |
| | 298,300 | | 363,800 | |
| TNMP Revolving Credit Facility | 139,900 | 5.30 | 151,600 | 5.37 |
| TXNM Revolving Credit Facility | 155,500 | 5.92 | 93,900 | 5.96 |
| | $ 593,700 | | $ 609,300 | |

In addition to the above borrowings, TXNM, PNM, and TNMP had letters of credit outstanding of $3.1 million, zero, and zero at March 31, 2025 that reduce the available capacity under their respective revolving credit facilities. TXNM also had $30.3 million of letters of credit outstanding under the WFB LOC Facility. The above table excludes intercompany debt. As of March 31, 2025 and December 31, 2024, PNM had $1.6 million and zero in intercompany borrowings from TXNM. TNMP had no intercompany borrowings from TXNM as of March 31, 2025 and December 31, 2024. TXNM had $1.6 million and $1.5 million in short-term borrowings from PNMR Development at March 31, 2025 and December 31, 2024.

PNM has $3.5 million and $3.6 million in scheduled principal payments due for the ETBC I Securitized Bonds in August 2025 and February 2026. PNM also has $104.0 million and $250.0 million of SUNs that are due in May and August 2025 as well as the PNM 2024 $200.0 million Term Loan due in November 2025. TNMP has $60.0 million of 3.53% FMBs that are due in February 2026. TXNM has $51.0 million outstanding under the TXNM 2021 Delayed Draw Term Loan that matures in May 2025. The Company's debt arrangements have various maturities and expiration dates. Additional information on debt maturities is contained in Note 7 of the Notes to Consolidated Financial Statements in the 2024 Annual Reports on Form 10-K.

**(10) Pension and Other Postretirement Benefit Plans**

TXNM and its subsidiaries maintain qualified defined benefit pension plans, postretirement benefit plans providing medical and dental benefits, and executive retirement programs (collectively, the "PNM Plans" and "TNMP Plans"). TXNM maintains the legal obligation for the benefits owed to participants under these plans. The periodic costs or income of the PNM Plans and TNMP Plans are included in regulated rates to the extent attributable to regulated operations. The Company presents the service cost component of its net periodic benefit costs in administrative and general expenses and the non-service costs components in other income (deductions), net of amounts capitalized or deferred to regulatory assets and liabilities, on the Condensed Consolidated Statements of Earnings. PNM and TNMP receive a regulated return on the amounts funded for

Table of Contents

**TXNM ENERGY, INC. AND SUBSIDIARIES**
**PUBLIC SERVICE COMPANY OF NEW MEXICO AND SUBSIDIARIES**
**TEXAS-NEW MEXICO POWER COMPANY AND SUBSIDIARIES**

**NOTES TO CONDENSED CONSOLIDATED FINANCIAL STATEMENTS**
(Unaudited)

pension and OPEB plans in excess of accumulated periodic cost or income to the extent included in retail rates (a "prepaid pension asset").

Additional information concerning pension and OPEB plans is contained in Note 11 of the Notes to Consolidated Financial Statements in the 2024 Annual Reports on Form 10-K. Annual net periodic benefit cost for the plans is actuarially determined using the methods and assumptions set forth in that note and is recognized ratably throughout the year. Differences between TNMP's annual net periodic costs (income) and amounts included in its regulated rates are deferred to regulatory assets or liabilities, for recovery or refund in future rate proceedings.

**PNM Plans**

The following table presents the components of the PNM Plans' net periodic benefit cost:

| | Three Months Ended March 31, | | | | | |
|---|---|---|---|---|---|---|
| | Pension Plan | | OPEB Plan | | Executive Retirement Program | |
| | 2025 | 2024 | 2025 | 2024 | 2025 | 2024 |
| | (In thousands) | | | | | |
| **Components of Net Periodic Benefit Cost** | | | | | | |
| Service cost | $ — | $ — | $ — | $ — | $ — | $ — |
| Interest cost | 5,385 | 5,427 | 567 | 597 | 122 | 124 |
| Expected return on plan assets | (7,458) | (7,757) | (1,384) | (1,391) | — | — |
| Amortization of net loss | 3,123 | 2,661 | — | — | 47 | 50 |
| Amortization of prior service cost | — | — | — | — | — | — |
| **Net Periodic Benefit Cost (Income)** | $ 1,050 | $ 331 | $ (817) | $ (794) | $ 169 | $ 174 |

PNM did not make any contributions to its pension plan trust in the three months ended March 31, 2025 and 2024 and does not anticipate making any contributions to the pension plan in 2025 through 2028, but PNM does expect to make a cash contribution of $7.9 million in 2029 based on current law, funding requirements, and estimates of portfolio performance. Funding assumptions were developed using a discount rate of 5.31% in 2025 declining to a rate of approximately 5.03% in 2027 and later years. Actual amounts to be funded in the future will be dependent on the actuarial assumptions at that time, including the appropriate discount rate. PNM may make additional contributions at its discretion. PNM did not make any cash contributions to the OPEB trust in the three months ended March 31, 2025 and 2024, however, a portion of the disbursements attributable to the OPEB trust is paid by PNM and are therefore considered to be contributions to the OPEB plan. Payments by PNM on behalf of the PNM OPEB plan were less than $0.1 million for the three months ended March 31, 2025 and 2024. These payments are expected to total $2.0 million in 2025 and $11.1 million for 2026-2029. Disbursements under the executive retirement program, which are funded by PNM and considered to be contributions to the plan, were $0.4 million and $0.3 million in the three months ended March 31, 2025 and 2024 and are expected to total $1.2 million during 2025 and $4.2 million for 2026-2029.

Table of Contents

**TXNM ENERGY, INC. AND SUBSIDIARIES**
**PUBLIC SERVICE COMPANY OF NEW MEXICO AND SUBSIDIARIES**
**TEXAS-NEW MEXICO POWER COMPANY AND SUBSIDIARIES**

**NOTES TO CONDENSED CONSOLIDATED FINANCIAL STATEMENTS**
(Unaudited)

**TNMP Plans**

The following table presents the components of the TNMP Plans' net periodic benefit cost:

| | Three Months Ended March 31, | | | | | |
|---|---|---|---|---|---|---|
| | Pension Plan | | OPEB Plan | | Executive Retirement Program | |
| | 2025 | 2024 | 2025 | 2024 | 2025 | 2024 |
| | (In thousands) | | | | | |
| **Components of Net Periodic Benefit Cost** | | | | | | |
| Service cost | $ — | $ — | $ 4 | $ 5 | $ — | $ — |
| Interest cost | 536 | 553 | 93 | 96 | — | 4 |
| Expected return on plan assets | (733) | (687) | (120) | (129) | — | — |
| Amortization of net (gain) loss | 168 | 139 | (124) | (161) | — | — |
| Amortization of prior service cost | — | — | — | — | — | — |
| **Net Periodic Benefit Cost (Income)** | $ (29) | $ 5 | $ (147) | $ (189) | $ — | $ 4 |

TNMP did not make any contributions to its pension plan trust in the three months ended March 31, 2025 and 2024 and does not anticipate making any contributions to the pension plan in 2025 through 2029 based on current law, funding requirements, and estimates of portfolio performance. Funding assumptions were developed using a discount rate of 5.32% in 2025 declining to a rate of approximately 5.05% in 2027 and later years. Actual amounts to be funded in the future will depend on the actuarial assumptions at that time, including the appropriate discount rate. TNMP may make additional contributions at its discretion. TNMP did not make any contributions to the OPEB trust in the three months ended March 31, 2025 and 2024 and does not expect to make contributions to the OPEB trust during the period 2025-2029. Disbursements under the executive retirement program, which are funded by TNMP and considered to be contributions to the plan, were zero and less than $0.1 million in the three months ended March 31, 2025 and 2024 and are expected to total zero during 2025 through 2029.

**(11) Commitments and Contingencies**

***Overview***

There are various claims and lawsuits pending against the Company. In addition, the Company is subject to federal, state, and local environmental laws and regulations and periodically participates in the investigation and remediation of various sites. In addition, the Company periodically enters into financial commitments in connection with its business operations. Also, the Company is involved in various legal and regulatory proceedings in the normal course of its business. See Note 12. It is not possible at this time for the Company to determine fully the effect of all litigation and other legal and regulatory proceedings on its financial position, results of operations, or cash flows.

With respect to some of the items listed below, the Company has determined that a loss is not probable or that, to the extent probable, cannot be reasonably estimated. In some cases, the Company is not able to predict with any degree of certainty the range of possible loss that could be incurred. The Company assesses legal and regulatory matters based on current information and makes judgments concerning their potential outcome, giving due consideration to the nature of the claim, the amount and nature of any damages sought, and the probability of success. Such judgments are made with the understanding that the outcome of any litigation, investigation, or other legal proceeding is inherently uncertain. The Company records liabilities for matters where it is probable a loss has been incurred and the amount of loss is reasonably estimatable. The actual outcomes of the items listed below could ultimately differ from the judgments made and the differences could be material. The Company cannot make any assurances that the amount of reserves or potential insurance coverage will be sufficient to cover the cash obligations that might be incurred as a result of litigation or regulatory proceedings. Except as otherwise disclosed, the Company does not expect that any known lawsuits, environmental costs, or commitments will have a material effect on its financial condition, results of operations, or cash flows.

Additional information concerning commitments and contingencies is contained in Note 16 of the Notes to Consolidated Financial Statements in the 2024 Annual Reports on Form 10-K.

Table of Contents

**TXNM ENERGY, INC. AND SUBSIDIARIES**
**PUBLIC SERVICE COMPANY OF NEW MEXICO AND SUBSIDIARIES**
**TEXAS-NEW MEXICO POWER COMPANY AND SUBSIDIARIES**

**NOTES TO CONDENSED CONSOLIDATED FINANCIAL STATEMENTS**
(Unaudited)

***Commitments and Contingencies Related to the Environment***

**Nuclear Spent Fuel and Waste Disposal**

Nuclear power plant operators are required to enter into spent fuel disposal contracts with the DOE that require the DOE to accept and dispose of all spent nuclear fuel and other high-level radioactive wastes generated by domestic power reactors. Although the Nuclear Waste Policy Act required the DOE to develop a permanent repository for the storage and disposal of spent nuclear fuel by 1998, the DOE announced that it would not be able to open the repository by 1998 and sought to excuse its performance of these requirements. In November 1997, the DC Circuit issued a decision preventing the DOE from excusing its own delay but refused to order the DOE to begin accepting spent nuclear fuel. Based on this decision and the DOE's delay, a number of utilities, including APS (on behalf of itself and the other PVNGS owners, including PNM), filed damages actions against the DOE in the Court of Federal Claims. The lawsuits filed by APS alleged that damages were incurred due to DOE's continuing failure to remove spent nuclear fuel and high-level waste from PVNGS. APS and the DOE entered into a settlement agreement, subsequently extended, that established a process for the payment of claims for costs incurred through December 31, 2025. Under the settlement agreement, APS must submit claims annually for payment of allowable costs. PNM records estimated claims on a quarterly basis. The benefit from the claims is passed through to customers under the FPPAC.

PNM estimates that it will incur approximately $55.6 million (in 2023 dollars) for its share of the costs related to the on-site interim storage of spent nuclear fuel at PVNGS for the remaining term of the operating licenses. PNM accrues these costs as a component of fuel expense as the nuclear fuel is consumed. At March 31, 2025 and December 31, 2024, PNM had a liability for interim storage costs of $14.0 million and $13.4 million, which is included in other deferred credits.

PVNGS has sufficient capacity at its on-site Independent Spent Fuel Storage Installation ("ISFSI") to store all of the nuclear fuel that will be irradiated during the initial operating license period, which ends in December 2027. Additionally, PVNGS has sufficient capacity at its on-site ISFSI to store a portion of the fuel that will be irradiated during the period of extended operation, which ends in November 2047. If uncertainties regarding the U.S. government's obligation to accept and store spent fuel are not favorably resolved, APS will evaluate alternative storage solutions that may obviate the need to expand the ISFSI to accommodate all of the fuel that will be irradiated during the period of extended operation.

**The Energy Transition Act**

The Energy Transition Act ("ETA") sets a statewide standard that requires investor-owned electric utilities to have specified percentages of their electric-generating portfolios be from renewable and zero-carbon generating resources. The ETA requires utilities operating in New Mexico to have renewable portfolios equal to 40% by 2025, 50% by 2030, 80% by 2040, and 100% zero-carbon energy by 2045. The ETA also allows for the recovery of undepreciated investments and decommissioning costs related to qualifying EGUs that the NMPRC has required be removed from retail jurisdictional rates, provided replacement resources to be included in retail rates have lower or zero-carbon emissions. The ETA requires the NMPRC to review and approve utilities' annual renewable portfolio plans to ensure compliance with the RPS. Also pursuant to the ETA, the New Mexico Environmental Improvement Board adopted standards of performance that limit $CO_2$ emissions to no more than 1,100 lbs. per MWh beginning January 1, 2023 for new and existing coal-fired EGUs with original installed capacities exceeding 300 MW.

The ETA provides for a transition from fossil-fuel generation resources to renewable and other carbon-free resources through certain provisions relating to the abandonment of coal-fired generating facilities. These provisions include the use of energy transition bonds, which are designed to be highly rated bonds that can be issued to finance certain costs of abandoning coal-fired facilities that are retired prior to January 1, 2023 for facilities operated by a "qualifying utility," or prior to January 1, 2032 for facilities that are not operated by a qualifying utility. The amount of energy transition bonds that can be issued to recover abandonment costs is limited to the lesser of $375.0 million or 150% of the undepreciated investment of the facility as of the abandonment date. Proceeds provided by energy transition bonds must be used only for purposes related to providing utility service to customers and to pay energy transition costs (as defined by the ETA). These costs may include plant decommissioning and coal mine reclamation costs provided those costs have not previously been recovered from customers or disallowed by the NMPRC or by a court order. Proceeds from energy transition bonds may also be used to fund severances for employees of the retired facility and related coal mine and to promote economic development, education and job training in areas impacted by the retirement of the coal-fired facilities. Energy transition bonds must be issued under a NMPRC-approved financing order, are secured by "energy transition property," are non-recourse to the issuing utility, and are repaid by a non-bypassable charge paid by all customers of the issuing utility. These customer charges are subject to an adjustment mechanism designed to provide for timely and complete payment of principal and interest due under the energy transition bonds.

Table of Contents

**TXNM ENERGY, INC. AND SUBSIDIARIES**
**PUBLIC SERVICE COMPANY OF NEW MEXICO AND SUBSIDIARIES**
**TEXAS-NEW MEXICO POWER COMPANY AND SUBSIDIARIES**

**NOTES TO CONDENSED CONSOLIDATED FINANCIAL STATEMENTS**
(Unaudited)

The ETA also provides that utilities must obtain NMPRC approval of competitively procured replacement resources that shall be evaluated based on their cost, economic development opportunity, ability to provide jobs with comparable pay and benefits to those lost upon retirement of the facility, and that do not exceed emissions thresholds specified in the ETA. In determining whether to approve replacement resources, the NMPRC must give preference to resources with the least environmental impacts, those with higher ratios of capital costs to fuel costs, and those located in the school district of the abandoned facility. The ETA also provides for the procurement of energy storage facilities and gives utilities discretion to maintain, control, and operate these systems to ensure reliable and efficient service.

The ETA has had and will have a significant impact on PNM's future generation portfolio, including PNM's retirement of SJGS in 2022. PNM cannot predict the full impact of the ETA with respect to Four Corners or the outcome of its future generating resource abandonment and replacement resource filings with the NMPRC.

**The Clean Air Act**

*Regional Haze*

Pursuant to the CAA, states are required to establish goals for improving visibility in national parks and wilderness areas (also known as Class I areas) and to develop long-term strategies for reducing emissions of air pollutants that cause visibility impairment in their own states and for preventing degradation in other states. States must establish a series of interim goals to ensure continued progress by adopting a new SIP every ten years. In the first SIP planning period, states were required to conduct BART determinations for certain covered facilities, including utility boilers, built between 1962 and 1977 that have the potential to emit more than 250 tons per year of visibility impairing pollution. For all future SIP planning periods, states must evaluate whether additional emissions reduction measures may be needed to continue making reasonable progress toward natural visibility conditions.

SIPs for the second planning period were due in July 2021, which deadline NMED was unable to meet. NMED is currently preparing its SIP for the second compliance period and has notified PNM that it will not be required to submit a regional haze four-factor analysis for SJGS since PNM retired its share of SJGS in 2022. On August 30, 2022, EPA published in the Federal Register an official "Finding of Failure to Submit" for states, including New Mexico, that have not yet submitted a round 2 regional haze SIP. This action by EPA started a two-year clock for it to issue a FIP, which deadline has now passed. NMED petitioned the NM Environmental Improvement Board to adopt a proposed SIP and submitted a final revised plan to the Environmental Improvement Board on March 3, 2025. PNM submitted comments on the proposed SIP in response to a request for comments by NMED. On March 12, 2025, as part of EPA's list of 31 deregulatory actions, EPA announced it would restructure the Regional Haze Program. The NM Environmental Improvement Board scheduled a public hearing April 28 to April 30, 2025.

*Carbon Dioxide Emissions*

In 2015, EPA established standards to limit $CO_2$ emissions from power plants, including (1) Carbon Pollution Standards for new, modified, and reconstructed power plants; and (2) the Clean Power Plan for existing power plants. Challengers successfully petitioned the U.S. Supreme Court for a stay of the Clean Power Plan. In 2019, EPA repealed the Clean Power Plan, promulgated the ACE Rule, and revised the implementing regulations for all emission guidelines. The ACE Rule was also challenged, and on January 19, 2021, the DC Circuit issued an opinion in American Lung Association and American Public Health Association v. EPA, et al., vacating the ACE Rule.

Numerous parties sought review by the U.S. Supreme Court, and on June 30, 2022, the U.S. Supreme Court held that the "generation shifting" approach in the Clean Power Plan exceeded the powers granted to EPA by Congress. Of broader significance in administrative law, the Court's opinion expressly invoked the "major question" doctrine, which requires rules involving issues of "vast economic or political significance" to be supported by clear statutory authorization. In cases where there is no clear statement of authority, courts need not defer to the agency's statutory interpretation on "major questions." The decision sets legal precedent for future rulemakings by EPA and other federal regulatory agencies whereby the agencies' authority may be limited based upon similar reasoning.

The litigation over the Carbon Pollution Standards remains held in abeyance but could be reactivated by the parties upon a determination by the court that reconsideration of the rule has concluded.

Table of Contents

**TXNM ENERGY, INC. AND SUBSIDIARIES**
**PUBLIC SERVICE COMPANY OF NEW MEXICO AND SUBSIDIARIES**
**TEXAS-NEW MEXICO POWER COMPANY AND SUBSIDIARIES**

**NOTES TO CONDENSED CONSOLIDATED FINANCIAL STATEMENTS**
(Unaudited)

In 2024, EPA adopted regulatory actions under CAA Sections 111(b) and (d) to replace the Clean Power Plan and the ACE Rule. The final rules include revised new source performance standards under Section 111(b) for all new natural gas-fired combustion turbines and emission guidelines under Section 111(d) requiring states to develop standards of performance for GHG emissions from existing fossil-fuel-fired electric steam generating units. In the final rules, EPA determined that the standards for existing coal- or gas-fired steam generating units must be based on the use of either CCS (long-term), natural gas co-firing (medium-term), or exempt from the rule via early retirement. The standards for new combustion turbines must be based on CCS (base load), efficient simple cycle design (intermediate load), or lower-emitting fuels (low load). Over a dozen states, several industry groups and some power companies and labor unions have filed challenges to the rule at the DC Circuit, which heard oral arguments on December 6, 2024. However, President Trump issued several executive orders on January 20, 2025, directing his Administration to review all agency actions and suspend, revise, or rescind those identified as imposing an undue burden on domestic energy resources. On March 12, 2025, as part of EPA's reconsideration of 31 environmental regulations, EPA announced the agency will reconsider the previous Administration's regulations on greenhouse gas standards and guidelines for power plants.

Because the CAA 111 rule does not contain provisions for existing natural gas units, on March 26, 2024, EPA announced it was opening a non-regulatory docket and issued framing questions to gather input about ways to design a stronger, more durable approach to GHG regulation of existing gas combustion turbines. The docket was open for public comment from March 26, 2024 to May 28, 2024 and the agency held a policy forum to bring stakeholders together to share ideas with EPA and others. Under the Trump Administration, EPA is unlikely to propose a rule based on this non-regulatory docket.

In 2021, President Biden signed an extensive executive order aimed at addressing climate change concerns domestically and internationally. The order was intended to build on the initial climate-related actions the Biden Administration took on January 20, 2021. It addressed a wide range of issues, including establishing climate change concerns as an essential element of U.S. foreign and security policy, identifying a process to determine the U.S. INDC under the Paris Agreement, and establishing a Special Presidential Envoy for Climate that would sit on the National Security Council. On April 22, 2021, at the Earth Day Summit, as part of the U.S.'s re-entry into the Paris Agreement, President Biden unveiled the goal to cut U.S. emissions by 50% - 52% from 2005 levels by 2030, nearly double the GHG emissions reduction target set by the Obama Administration. The 2030 goal joined President Biden's other climate goals which included a carbon pollution-free power sector by 2035 and a net-zero emissions economy by no later than 2050. In an executive order issued on January 20, 2025, President Trump ordered his Administration to withdraw the U.S. from the Paris Agreement and from any agreement, pact, accord, or similar commitment made under the United Nations Framework Convention on Climate Change.

PNM's review of the GHG emission reductions standards that have or may occur as a result of legislation or regulation is ongoing. We are currently determining what impact, if any, the final rules will have on our business, results of operations, and financial condition.

*National Ambient Air Quality Standards ("NAAQS")*

The CAA requires EPA to set NAAQS for pollutants reasonably anticipated to endanger public health or welfare. EPA has set NAAQS for certain pollutants, including NOx, $SO_2$, ozone, and particulate matter.

*NOx Standard* – In 2018, EPA published the final rule to retain the current primary health-based NOx standards of which $NO_2$ is the constituent of greatest concern and is the indicator for the primary NAAQS. EPA concluded that the current 1-hour and annual primary $NO_2$ standards are requisite to protect public health with an adequate margin of safety. The rule became effective on May 18, 2018. The State of New Mexico has attained the current NOx NAAQS standards.

*$SO_2$ Standard* – In 2019, EPA announced its final decision to retain, without changes, the primary health-based NAAQS for $SO_2$. Specifically, EPA retained the current 1-hour standard for $SO_2$, which is 75 parts per billion, based on the 3-year average of the 99th percentile of daily maximum 1-hour $SO_2$ concentrations. In 2021, EPA published in the Federal Register the initial air quality designations for all remaining areas not yet designated under the 2010 $SO_2$ Primary NAAQS. All areas of New Mexico have been designated attainment/unclassifiable through four rounds of designations by EPA.

*Ozone Standard* – In 2015, EPA finalized the new ozone NAAQS and lowered both the primary and secondary 8-hour standard from 75 to 70 parts per billion. With ozone standards becoming more stringent, fossil-fueled generation units will come under increasing pressure to reduce emissions of NOx and volatile organic compounds since these are the pollutants that form ground-level ozone. During 2017 and 2018, EPA released rules establishing area designations for ozone. In those rules, San Juan County, New Mexico, where Four Corners is located, is designated as attainment/unclassifiable and only a small area

Table of Contents

**TXNM ENERGY, INC. AND SUBSIDIARIES**
**PUBLIC SERVICE COMPANY OF NEW MEXICO AND SUBSIDIARIES**
**TEXAS-NEW MEXICO POWER COMPANY AND SUBSIDIARIES**

**NOTES TO CONDENSED CONSOLIDATED FINANCIAL STATEMENTS**
(Unaudited)

in Doña Ana County, New Mexico is designated as marginal non-attainment. Although Afton Generating Station is located in Doña Ana County, it is not located within the small area designated as non-attainment for the 2015 ozone standard.

PNM does not believe there will be material impacts to its facilities because of the non-attainment designation of the small area within Doña Ana County. Until EPA approves attainment designations for the Navajo Nation and releases a proposal to implement the revised ozone NAAQS, PNM is unable to predict what impact the adoption of these standards may have on Four Corners. On July 13, 2020, EPA proposed to retain the existing ozone NAAQS based on a review of the full body of currently available scientific evidence and exposure/risk information, but on August 21, 2023, EPA announced an entirely new review of the ozone standard. PNM cannot predict the outcome of this matter.

In 2019, EPA issued findings that several states, including New Mexico, had failed to submit interstate transport SIPs for the 2015 8-hour ozone NAAQS, triggering an obligation for EPA to issue a FIP within two years. In response, NMED submitted a Good Neighbor SIP on July 27, 2021 that demonstrates that there are no significant contributions from New Mexico to downwind problems in meeting the federal ozone standard. On March 15, 2023, EPA Administrator Regan signed a final action imposing a FIP on multiple states but did not include a FIP for New Mexico because the most updated modeling available at the time of the proposal confirmed the state did not contribute to downwind ozone nonattainment or maintenance areas. However, the updated modeling EPA used in the final rule indicated that New Mexico may be significantly contributing to one or more non-attainment or maintenance areas. In light of that modeling result, on February 16, 2024, the EPA published a proposed rule partially disapproving the SIPs for New Mexico and four other states (Arizona, Iowa, Kansas, Tennessee) and expanding the Good Neighbor FIP to apply to these states. The FIP aspect of the proposed rule would have required fossil fuel-fired power plants in these five states to participate in an allowance-based ozone season NOx emissions trading program beginning in 2025, but the outgoing Biden Administration did not finalize the rule. On March 10, 2025, in the DC Circuit, the EPA filed a motion for voluntary remand of its ozone interstate transport FIP for the 2015 ozone NAAQS to reconsider the rule and anticipates completing a new rulemaking by Fall 2026. The FIP is listed for reconsideration under the EPA's March 2025 list of deregulatory actions.

*PM Standard* – In 2023, EPA published, in the Federal Register, a proposal to lower the annual fine PM standard to between 9-10 µg/m3 but retain the rest of its PM standards, including the current daily fine PM standard, the daily coarse PM standard, and the secondary PM standards. The final rule was published on March 6, 2024, lowering the primary annual PM 2.5 NAAQS to 9 ug/m3, and became effective May 6, 2024. States will have until March 2032 to attain compliance with the new standard. During the multi-year implementation process, EPA will designate attainment/nonattainment areas by March 6, 2026, and states will submit a SIP to EPA by September 6, 2027. This implementation process also applies to the Albuquerque-Bernalillo County Environmental Health Department who may combine efforts with NMED. Bernalillo County does not currently meet the 9 ug/m3 standard which may impact future air permitting activities at Rio Bravo and Reeves Generating Stations if the county is designated as nonattainment. However, even before any designations are made, the new standard is effective for conducting required modeling for permit applications and revisions. The lower standard is expected to result in new nonattainment areas throughout the country and could prompt additional PM control requirements, but PNM cannot predict the impacts of the outcome of future rulemaking. The May 2024 rule is listed for reconsideration under EPA's March 2025 list of deregulatory actions.

**Cooling Water Intake Structures**

In 2014, EPA issued a rule establishing national standards for certain cooling water intake structures at existing power plants and other facilities under the Clean Water Act to protect fish and other aquatic organisms by minimizing impingement mortality (the capture of aquatic wildlife on intake structures or against screens) and entrainment mortality (the capture of fish or shellfish in water flow entering and passing through intake structures).

To minimize impingement mortality, the rule provides operators of facilities, such as Four Corners, seven options for meeting Best Technology Available ("BTA") standards for reducing impingement. The permitting authority must establish the BTA for entrainment on a site-specific basis, taking into consideration an array of factors, including endangered species and social costs and benefits. Affected sources must submit source water baseline characterization data to the permitting authority to assist in the BTA determination. Compliance deadlines under the rule are tied to permit renewals, including any subject to a schedule of compliance established by the permitting authority in the permit itself.

In 2018, several environmental groups sued EPA Region IX in the U.S. Court of Appeals for the Ninth Circuit over EPA's failure to timely reissue the Four Corners NPDES permit. The petitioners asked the court to issue a *writ of mandamus* compelling EPA Region IX to take final action on the pending NPDES permit by a reasonable date. EPA subsequently reissued the NPDES permit. The permit did not contain conditions related to the cooling water intake structure rule, because EPA

Table of Contents

**TXNM ENERGY, INC. AND SUBSIDIARIES**
**PUBLIC SERVICE COMPANY OF NEW MEXICO AND SUBSIDIARIES**
**TEXAS-NEW MEXICO POWER COMPANY AND SUBSIDIARIES**

**NOTES TO CONDENSED CONSOLIDATED FINANCIAL STATEMENTS**
(Unaudited)

determined that the facility had achieved BTA for both impingement and entrainment by operating a closed-cycle recirculation system. Several environmental groups filed a petition for review with EPA's Environmental Appeals Board ("EAB") concerning the reissued permit. The environmental groups alleged that the permit was reissued in contravention of the Clean Water Act and did not contain limits or conditions required by EPA's ELG applicable to Four Corners or EPA's cooling water intake structures rule, among others. EPA withdrew the Four Corners NPDES permit in order to examine the issues raised by the environmental groups and then issued an updated NPDES permit in 2019. The permit was once again appealed to the EAB and was stayed before the effective date, but the EAB issued an order denying the petition for review on September 30, 2020. Thereafter, the Regional Administrator of the EPA signed a notice of final permit decision, and the NPDES permit was issued on November 9, 2020. The permit became effective December 1, 2020. On January 22, 2021, the environmental groups filed a petition for review of the EAB's decision with the U.S. Court of Appeals for the Ninth Circuit. The September 2019 permit remained in effect pending the outcome of this appeal. On March 21, 2022, EPA provided notice in the Federal Register of a proposed settlement agreement with the environmental groups. The parties subsequently executed the settlement agreement as of May 2, 2022. Under the settlement, the lawsuit was administratively closed through September 6, 2023, during which time a third-party consultant spent 12 months sampling discharges from Four Corners and EPA spent three months completing an analysis. On December 1, 2023, EPA issued a modification, effective December 31, 2023, to the NPDES permit that had been issued on November 9, 2020. The modification applies to permit elements related to effluent discharge. PNM cannot predict whether the analysis required to be performed by EPA under the settlement agreement will result in further changes to the NPDES permit but does not anticipate that it will have a material impact on PNM's financial position, results of operations, or cash flows.

**Effluent Limitation Guidelines**

In 2013, EPA published proposed revised wastewater ELG establishing technology-based wastewater discharge limitations for fossil fuel-fired electric power plants. EPA signed the final Steam Electric ELG rule in 2015. The final rule, which became effective on January 4, 2016, phased in the new, more stringent requirements in the form of effluent limits for arsenic, mercury, selenium, and nitrogen for wastewater discharged from wet scrubber systems and zero discharge of pollutants in ash transport water that must be incorporated into plants' NPDES permits. The 2015 rule required each plant to comply between 2018 and 2023 depending on when it needed a new or revised NPDES permit.

The Steam Electric ELG rule was challenged in the U.S. Court of Appeals for the Fifth Circuit by numerous parties. In 2017, EPA signed a notice indicating its intent to reconsider portions of the rule, and the Fifth Circuit issued an order severing the issues under reconsideration and holding the case in abeyance as to those issues. However, the court allowed challenges to other portions of the rule to proceed. In 2019, the Fifth Circuit granted those challenges and issued an opinion vacating several portions of the rule, specifically those related to legacy wastewater and leachate, for which the court deemed the standards selected by EPA arbitrary and capricious.

In 2017, EPA published a final rule for postponement of certain compliance dates. The rule postponed the earliest date on which compliance with the ELG for these waste streams would be required from November 1, 2018 until November 1, 2020. In 2019, EPA published a proposed rule revising the original ELG while maintaining the compliance dates. In 2020, EPA published in the Federal Register the final Steam Electric ELG and Standards for the Steam Electric Power Generating Point Source Category, revising the final 2015 guidelines for both flue gas desulfurization wastewater and bottom ash transport water. The 2020 rule required compliance with new limits as soon as possible on or after October 13, 2021, but no later than December 31, 2025.

In 2021, EPA published notice that it would undertake a supplemental rulemaking to revise the ELG after completing its review of the rules reconsidered in 2020. As part of this process, EPA is committed to determine whether more stringent limitations and standards would be appropriate. On March 29, 2023, EPA published the proposed ELG Rule in the Federal Register. The proposed rule included stricter limitations for wastewater discharges for coal-fired facilities, but allowed for flexibilities for those coal-powered facilities that would soon decommission or repower. With this proposed rule EPA extended the date of decommissioning or repowering from December 31, 2028, to December 31, 2032.

On May 9, 2024, EPA published a final rule to further revise the ELG. This final supplemental rule updated the technology-based limitations applicable to flue gas desulfurization wastewater, bottom ash transport water, and legacy wastewater at existing sources, as well as combustion residual leachate at new and existing sources. The 2024 rule was challenged in the U.S. Court of Appeals for the Eighth Circuit, but the court denied motions for a stay, so the rule remains in effect. On March 12, 2025, EPA announced it would reconsider the ELGs for the steam electric power generating industry.

Table of Contents

**TXNM ENERGY, INC. AND SUBSIDIARIES**
**PUBLIC SERVICE COMPANY OF NEW MEXICO AND SUBSIDIARIES**
**TEXAS-NEW MEXICO POWER COMPANY AND SUBSIDIARIES**

**NOTES TO CONDENSED CONSOLIDATED FINANCIAL STATEMENTS**
(Unaudited)

Reeves Station discharges cooling tower blowdown to a publicly owned treatment plant and no longer holds an NPDES permit; therefore, it is expected that no ELG requirements will be imposed.

See "Cooling Water Intake Structures" above for additional discussion of Four Corners' current NPDES permit. Four Corners may be required to change equipment and operating practices affecting boilers and ash handling systems, as well as change its waste disposal techniques during the next NPDES permit renewal. PNM is unable to predict the outcome of these matters or a range of the potential costs of compliance.

**Santa Fe Generating Station**

PNM and NMED are parties to agreements under which PNM has installed a remediation system to treat water from a City of Santa Fe municipal supply well and an extraction well to address gasoline contamination in the groundwater at the site of PNM's former Santa Fe Generating Station and service center. A 2008 NMED site inspection report states that neither the source nor extent of contamination at the site has been determined and that the source may not be the former Santa Fe Generating Station. During 2013 and 2014, PNM and NMED collected additional samples that showed elevated concentrations of nitrate and volatile organic compounds in some of the monitoring wells at the site. In addition, one monitoring well contained free-phase hydrocarbon products. PNM collected a sample of the product for "fingerprint" analysis. The results of this analysis indicated the product was a mixture of older and newer fuels. The presence of newer fuels in the sample suggests the hydrocarbon product likely originated from off-site sources. In 2015, PNM and NMED entered into a memorandum of understanding to address changing groundwater conditions at the site under which PNM agreed to continue hydrocarbon investigation under the supervision of NMED. Qualified costs are eligible for payment through the New Mexico Corrective Action Fund ("CAF"), which is administered by the NMED Petroleum Storage Tank Bureau. In 2019, PNM received notice from NMED that an abatement plan for the site is required to address concentrations of previously identified compounds, unrelated to those discussed above, found in the groundwater. NMED approved PNM's abatement plan proposal, which covers field work and reporting.

Field work related to the investigation under both the CAF and abatement plan requirements was completed and activities and findings associated with the field work were presented in two separate reports and released to stakeholders in early 2020. Subsequent field work was completed in July 2020 and two reports were released supporting PNM's contention that off-site sources have impacted, and are continuing to impact, the local groundwater in the vicinity of the former Santa Fe Generating Station.

In 2021, NMED approved both the field work plans required for site characterization and associated work activities which were completed by the end of 2022 and a report was submitted to the NMED in 2023. Groundwater sampling for the abatement plan's first semiannual work was completed in 2023, and the associated report was completed and submitted to the NMED. In addition, the work plan for the 2023 CAF work was completed and submitted to the NMED in July 2023. NMED approved this work plan in December 2023. The activities from the work plan include the installation of three monitoring wells which were completed in December 2024. A report summarizing the well installation is under preparation. Site wide sampling will take place in 2025, with reports provided to NMED.

The City of Santa Fe has stopped operating its well at the site, which is needed for PNM's groundwater remediation system to operate. As a result, PNM has stopped performing remediation activities at the site. However, PNM's monitoring and other abatement activities at the site are ongoing and will continue until the groundwater meets applicable federal and state standards or until the NMED determines remediation is not required, whichever is earlier. PNM is not able to assess the duration of this project or estimate the impact on its obligations if PNM is required to resume groundwater remediation activities at the site. PNM is unable to predict the outcome of these matters.

**Coal Combustion Residuals Waste Disposal**

CCRs consisting of fly ash, bottom ash, and gypsum generated from coal combustion and emission control equipment at SJGS have been disposed of in the surface mine pits adjacent to the plant. SJGS does not operate any onsite CCR impoundments or landfills. The NMMMD currently regulates mine reclamation activities at the San Juan mine, including placement of CCRs in the surface mine pits, with federal oversight by the OSM. APS disposes of CCRs in onsite ponds and dry storage areas at Four Corners. Ash management at Four Corners is regulated by EPA and the New Mexico State Engineer's Office.

EPA's 2015 coal ash rule included a non-hazardous waste determination for coal ash and sets minimum criteria for existing and new CCR landfills and surface impoundments. In 2016, the Water Infrastructure Improvements for the Nation Act

Table of Contents

**TXNM ENERGY, INC. AND SUBSIDIARIES**
**PUBLIC SERVICE COMPANY OF NEW MEXICO AND SUBSIDIARIES**
**TEXAS-NEW MEXICO POWER COMPANY AND SUBSIDIARIES**

**NOTES TO CONDENSED CONSOLIDATED FINANCIAL STATEMENTS**
(Unaudited)

(the "WIIN Act") was signed into law to address critical water infrastructure needs in the U.S. and contained a number of provisions related to CCRs. Among other things, the WIIN Act allowed, but did not require, states to develop and submit CCR permit programs for EPA approval, provided flexibility for states to incorporate EPA's 2015 rule for CCRs or develop other criteria that are at least as protective as EPA's rule, and required EPA to approve state permit programs within 180 days of submission by the state. Because states are not required to implement their own CCR permit programs, EPA was required to develop a federal permit program in states that chose not to implement a program, subject to congressional funding. Until state or federal permit programs are in effect, the 2015 rule continues to be self-implementing in nature, subject to enforcement by EPA or citizen groups. For facilities located within the boundaries of Native American reservations, such as the Navajo Nation where Four Corners is located, EPA is required to develop a federal permit program regardless of appropriated funds.

In 2018, EPA published a rule that constitutes "Phase One, Part One" of its ongoing reconsideration and revision of the 2015 CCR rule. The final Phase One, Part One rule extended the deadline to allow EGUs with unlined impoundments or that fail to meet the uppermost aquifer requirement to continue to receive coal ash until October 31, 2020, which was again extended by subsequent amendments. The rule also authorized a "Participating State Director" or EPA to approve suspension of groundwater monitoring requirements and to issue certifications related to the location restrictions, design criteria, groundwater monitoring, remedy selection and implementation. The rule also modified groundwater protection standards for certain constituents, which include cobalt, molybdenum, lithium, and lead without a maximum contamination level.

In 2019, EPA published a second round of proposed revisions, which are commonly referred to as the "Phase Two" revisions, to address reporting and accessibility to public information, "CCR piles" and "beneficial use" definitions, and the requirements for management of CCR piles. EPA reopened and extended the Phase Two comment period several times. To date, EPA has not yet finalized provisions in Phase Two related to beneficial use of CCR and CCR piles.

Since its Phase Two proposal, EPA has finalized two other rules addressing various CCR rule provisions. In 2020, EPA promulgated its proposed Holistic Approach to Closure Part A ("Part A"), which proposed a new deadline of August 31, 2020, for companies to initiate closure of unlined CCR impoundments. In accordance with the DC Circuit Court of Appeals' vacatur of portions of the 2015 CCR Rule, Part A also changed the classification of compacted soil-lined or clay-lined surface impoundments from "lined" to "unlined", triggering closure or retrofit requirements for those impoundments. In addition, Part A delineated a process for owners/operators to submit requests for alternative closure deadlines based on lack of alternate disposal capacity and gave operators of unlined impoundments until April 11, 2021 to cease receipt of waste at these units and initiate closure.

EPA also issued the Holistic Approach to Closure Part B ("Part B") in 2020, which delineated the process for owners/operators to submit alternate liner demonstrations for clay-lined surface impoundments that could otherwise meet applicable requirements. This rule did not include beneficial use of CCR for closure, which EPA explained would be addressed in subsequent rulemaking actions. On May 18, 2023, EPA published a proposed rule on the regulatory requirements for inactive surface impoundments at inactive facilities and a new category of regulated unit called a CCR management unit ("CCRMU"), including groundwater monitoring, corrective action, closure, and post-closure care requirements for all CCR management units (regardless of how or when that CCR was placed), and several technical corrections to the existing regulations. Comments on the proposed rule were due July 17, 2023.

On May 8, 2024, EPA published a final rule that extended federal CCR regulatory requirements to (1) inactive CCR surface impoundments at inactive utilities and (2) CCRMU (Legacy Rule), including CCR impoundments and landfills that closed prior to the effective date of the 2015 CCR rule, inactive CCR landfills, and other areas where CCR was managed directly on the land. The rule became effective on November 8, 2024. EPA included deferral options for smaller CCRMU containing between one and 1,000 tons of CCR, CCRMU located beneath critical infrastructure or large buildings or structures vital to the continuation of current site activities, and CCRMU that closed prior to the effective date of the new rule (subject to certain eligibility conditions). EPA also codified the controversial definitions of infiltration and liquids that were litigated in the DC Circuit. Six petitions for review of the Legacy Rule were filed and were consolidated into one case by the DC Circuit. The Utility Solid Waste Activities Group, of which TXNM is a member, is a petitioner jointly with the National Rural Electric Cooperative Association, and American Public Power Association. The U.S. Supreme Court denied a requested stay of the rule by Eastern Kentucky Cooperative. As part of the list of deregulatory actions, EPA is evaluating the Legacy Rule to determine whether to grant short-term and long-term relief such as extending compliance deadlines and aims to complete such rule changes within one year.

Table of Contents

**TXNM ENERGY, INC. AND SUBSIDIARIES**
**PUBLIC SERVICE COMPANY OF NEW MEXICO AND SUBSIDIARIES**
**TEXAS-NEW MEXICO POWER COMPANY AND SUBSIDIARIES**

**NOTES TO CONDENSED CONSOLIDATED FINANCIAL STATEMENTS**
(Unaudited)

As of the effective date of the rule, one CCRMU was identified at SJGS. SJGS is required, at a minimum, to conduct a two-part evaluation of historic and current CCRMUs with reporting due dates of February 9, 2026, and February 8, 2027, with each report posted to a company website by the due date.

At this time, PNM is still evaluating the financial impacts of this final regulation for Four Corners. Initial CCRMU site surveys are expected to be completed by February 2026 with final site investigation reports expected to be finalized by February 2027. Based on the information available to the Company at this time, PNM cannot reasonably estimate the fair value of the entire CCRMU ARO. PNM cannot predict the outcome of the CCRMU site evaluations and investigations, or how these outcomes might affect the associated costs, which might have a material impact on PNM's operations, financial position, or cash flows.

In 2020, EPA published a proposed rule establishing a federal permitting program for the handling of CCR within the boundaries of Native American reservations and in states without their own federally authorized state programs. Permits for units within the boundaries of Native American reservations would be due 18 months after the effective date of the rule. EPA projected finalizing the rule in October 2024 but still has not submitted a final version to the Office of Management and Budget ("OMB"). Given the change in administration, it is not clear whether or when EPA will finalize the rule. EPA has coordinated with the affected permits for the three facilities with CCR disposal units located on Native American lands. PNM cannot predict the outcome of EPA's rulemaking activity or the outcome of any related litigation, and whether or how such a ruling would affect operations at Four Corners.

EPA's CCR rule does not cover mine placement of coal ash. In the preamble to its 2015 rule, EPA explained that the United States Office of Surface Mining Reclamation and Enforcement ("OSM") and, as necessary, EPA would address the management of CCR in mine fills in a separate regulatory action, recognizing OSM's expertise in this area. EPA's decision to defer to OSM was based on a recommendation from the National Academy of Sciences ("NAS"), which was commissioned by Congress in 2006 to investigate the health, safety and environmental risks associated with the use of CCR for mine reclamation. The NRC report recommended that enforceable federal standards be established for the disposal of CCR in mine fills to ensure that states have specific authority and that states implement adequate safeguards. In 2007, OSM published an advance notice of proposed rulemaking on the placement of CCR at mine sites. In that notice, OSM explained its intent to develop the proposed regulations based on its existing authority under the Surface Mining Control and Reclamation Act ("SMCRA"). Since 2007, however, OSM has not taken any further action to advance this rulemaking. PNM cannot predict the outcome of OSM's proposed rulemaking regarding CCR regulation, including mine placement of CCRs, or whether OSM's actions will have a material impact on PNM's operations, financial position, or cash flows.

As noted above, SJGS does not operate any onsite CCR impoundments or landfills that are regulated under the 2015 CCR rule, and as of November 8, 2024, identified only one CCRMU that would be regulated under the Legacy Rule. That CCRMU has since been removed from that unit and PNM will conduct the requisite site investigation reports. PNM would seek recovery from its retail customers of all CCR costs for jurisdictional assets that are ultimately incurred.

Utilities that own or operate CCR disposal units, such as those at Four Corners, as indicated above, were required to collect sufficient groundwater sampling data to initiate a detection monitoring program. Four Corners completed the analysis for its CCR disposal units, which identified several units that needed corrective action or needed to cease operations and initiate closure by April 11, 2021. Work is ongoing. Four Corners continues to gather additional groundwater data and perform remedial evaluations and activities. At this time, PNM does not anticipate its share of the cost to complete these corrective actions to close the CCR disposal units, or to gather and perform remedial evaluations on groundwater at Four Corners, will have a significant impact on its operations, financial position, or cash flows.

***Other Commitments and Contingencies***

**Coal Supply**

*Four Corners*

APS purchases all of Four Corners' coal requirements from NTEC, an entity owned by the Navajo Nation, under the Four Corners CSA that expires in 2031. The coal comes from reserves located within the Navajo Nation. The contract provides for pricing adjustments over its term based on economic indices and certain minimum payments that may be required if no deliveries of coal are taken. PNM's share of the coal costs is being recovered through the FPPAC. See additional discussion of the Four Corners CSA in Note 17 of the Notes to Consolidated Financial Statements in the 2024 Annual Reports on Form 10-K.

Table of Contents

**TXNM ENERGY, INC. AND SUBSIDIARIES**
**PUBLIC SERVICE COMPANY OF NEW MEXICO AND SUBSIDIARIES**
**TEXAS-NEW MEXICO POWER COMPANY AND SUBSIDIARIES**

**NOTES TO CONDENSED CONSOLIDATED FINANCIAL STATEMENTS**
(Unaudited)

*Coal Mine Reclamation*

As indicated under Coal Combustion Residuals Waste Disposal above, SJGS disposed of CCRs in the surface mine pits adjacent to the plant and Four Corners disposes of CCRs in ponds and dry storage areas.

Under the terms of the SJGS CSA, PNM and the other SJGS owners are obligated to compensate WSJ LLC for all reclamation costs associated with the supply of coal from the San Juan mine. PNM and Westmoreland have entered into an agreement under which mine reclamation services for SJGS would be provided. A mine reclamation cost study was completed in the first quarter of 2024 and PNM remeasured its liability, which resulted in an increase in overall reclamation costs of $20.9 million, due primarily to higher inflationary factors. As a result, PNM recorded the increase in the liability related to the underground mine of $17.0 million as a regulatory asset on the Condensed Consolidated Balance Sheets. Due to the NMPRC cap on the amount that can be collected from retail customers for final reclamation of the surface mines at $100.0 million, PNM was required to record $4.0 million of the increase related to the surface mine liability plus an additional $0.5 million, related to other costs, as a regulatory disallowance on the Condensed Consolidated Statements of Earnings for the three months ended March 31, 2024.

PNM's estimate of the costs necessary to reclaim the mine that serves SJGS is subject to many assumptions, including the timing of reclamation, generally accepted practices at the time reclamation activities occur, and current inflation and discount rates. PNM cannot predict the ultimate cost to reclaim the mine that serves SJGS and would seek to recover all costs related to reclaiming the underground mine from its customers but could be exposed to additional loss related to surface mine reclamation. In connection with certain mining permits relating to the operation of the San Juan mine, Westmoreland was required to post reclamation bonds of $118.7 million with the NMMMD. In order to facilitate the posting of reclamation bonds by sureties on behalf of Westmoreland, TXNM entered into the WFB LOC Facility under which letters of credit aggregating $30.3 million have been issued.

A coal mine reclamation study for the surface mine that serves Four Corners was issued in December 2024. The study reflected operation of the mine through 2031, the term of the Four Corners CSA. PNM remeasured its liability, which resulted in a decrease in overall reclamation costs of $1.6 million, due primarily to lower overhead costs, contractor management costs, and taxes and royalties. Due to the NMPRC cap on the amount that can be collected from retail customers for final reclamation of the surface mines at $100.0 million, PNM recorded the decrease related to the surface mine liability as a regulatory disallowance on the Consolidated Statements of Earnings for the year ended December 31, 2024.

Based on the most recent estimates, PNM's remaining payments as of March 31, 2025 for mine reclamation, in future dollars, are estimated to be $46.5 million for the surface mines at both SJGS and Four Corners and $62.7 million for the underground mine at SJGS. At March 31, 2025 and December 31, 2024, liabilities, in current dollars, of $34.4 million and $38.3 million for surface mine reclamation and $53.5 million and $52.9 million for underground mine reclamation were recorded in other deferred credits.

The SJGS owners are parties to a reclamation trust funds agreement to provide financial assurance for post-term coal mine reclamation obligations. The trust funds agreement requires each owner to enter into an individual trust agreement with a financial institution as trustee, create an irrevocable reclamation trust, and meet year-end funding targets set by funding curves that are approved by the SJGS ownership. PNM began using its mine reclamation trust to pay for final mine reclamation costs in April 2023. Because the trust agreement requires meeting specific funding targets at year end, it may be necessary for PNM to make additional contributions to meet those targets. PNM funded $27.3 million in 2024. Based on PNM's reclamation trust fund balance at March 31, 2025, and current funding curve targets, PNM anticipates contributing $1.6 million in 2025, $1.0 million in 2026, and $0.4 million in 2027.

Under the Four Corners CSA, PNM is required to fund its share of estimated final reclamation costs in annual installments into an irrevocable escrow account solely dedicated to the final reclamation cost of the surface mine at Four Corners. PNM contributed $3.2 million in 2024 and anticipates providing additional funding of $0.5 million per year for 2025, 2026 and 2027.

PNM recovers from retail customers reclamation costs associated with the underground mine. However, the NMPRC capped the amount collected from retail customers for final reclamation of the surface mines at $100.0 million for both SJGS and Four Corners. If future estimates increase the liability for surface mine reclamation, the excess would be expensed at that time. The impacts of changes in New Mexico state law as a result of the enactment of the ETA and regulatory determinations

Table of Contents



made by the NMPRC may also affect PNM's financial position, results of operations, and cash flows. PNM is currently unable to determine the outcome of these matters or the range of possible impacts.

**SJGS Decommissioning**

On November 9, 2021, the San Juan County Commission approved the Coal-Fired Electricity Generating Facility Demolition and Remediation Ordinance ("Ordinance 121"), requiring the full demolition of SJGS upon its complete and permanent closure. Ordinance 121 required the SJGS owners to submit a proposed demolition and remediation plan no later than three months after SJGS was retired. The SJGS owners submitted the decommissioning and remediation plan on December 28, 2022. In connection with restructuring of the SJGS ownership on December 31, 2017, PNM and the other SJGS owners entered into the San Juan Decommissioning and Trust Funds Agreement, which requires PNM to fund its ownership share of final decommissioning costs into an irrevocable trust. Under the agreement, PNM made an initial funding of $14.7 million in December 2022 and made additional contributions of $7.0 million in 2024. The amount and timing of additional trust funding is subject to revised decommissioning cost studies and agreement among the SJGS owners. PNM began using its decommissioning trust to pay for demolition and decommissioning costs in October 2023. PNM has posted a surety bond in the amount of $46.0 million in connection with certain environmental decommissioning obligations and must maintain the bond or other financial assurance until those obligations are satisfied. The surety bond only represents a liability if the SJGS owners fail to deliver on its contractual liability.

PNM records its share of the SJGS decommissioning obligation as an ARO on its Condensed Consolidated Balance Sheets. Studies on the decommissioning costs of SJGS are performed periodically and revisions to the ARO liability are recorded. In the third quarter of 2022, a new decommissioning cost study was completed, which required PNM to remeasure its SJGS decommissioning ARO. The new study resulted in an estimated decrease to PNM's share of the decommissioning obligation of $21.1 million, which was recorded in September 2022.

**PVNGS Liability and Insurance Matters**

Public liability for incidents at nuclear power plants is governed by the Price-Anderson Nuclear Industries Indemnity Act, which limits the liability of nuclear reactor owners to the amount of insurance available from both commercial sources and an industry-wide retrospective payment plan. The insurance limit is subject to an adjustment every five years based upon the aggregate percentage change in the CPI. The most recent adjustment took effect on January 1, 2024. As of that date, in accordance with this act, the PVNGS participants are insured against public liability exposure for a nuclear incident up to $16.3 billion per occurrence. PVNGS maintains the maximum available nuclear liability insurance in the amount of $500 million, which is provided by American Nuclear Insurers. The remaining $15.8 billion is provided through a mandatory industry-wide retrospective assessment program. If losses at any nuclear power plant covered by the program exceed the accumulated funds, PNM could be assessed retrospective premium adjustments. The maximum retrospective premium per reactor under the program for each nuclear liability incident is $165.9 million, subject to a maximum annual premium of $24.7 million per incident. Based on PNM's ownership interest in the three units, PNM's maximum retrospective premium per incident for all three units is $36.3 million, with a maximum annual payment limitation of $5.4 million, to be adjusted periodically for inflation.

The PVNGS participants maintain insurance for damage to, and decontamination of, property at PVNGS in the aggregate amount of $2.8 billion, a substantial portion of which must first be applied to stabilization and decontamination. These coverages are provided by Nuclear Electric Insurance Limited ("NEIL"). The primary policy offered by NEIL contains a sublimit of $2.25 billion for non-nuclear property damage. If NEIL's losses in any policy year exceed accumulated funds, PNM is subject to retrospective premium adjustments of $5.1 million. The insurance coverages discussed in this and the previous paragraph are subject to certain policy conditions, sublimits, and exclusions.

**(12) Regulatory and Rate Matters**

The Company is involved in various regulatory matters, some of which contain contingencies that are subject to the same uncertainties as those described in Note 11. Additional information concerning regulatory and rate matters is contained in Note 17 of the Notes to Consolidated Financial Statements in the 2024 Annual Reports on Form 10-K.

Table of Contents

**TXNM ENERGY, INC. AND SUBSIDIARIES**
**PUBLIC SERVICE COMPANY OF NEW MEXICO AND SUBSIDIARIES**
**TEXAS-NEW MEXICO POWER COMPANY AND SUBSIDIARIES**

**NOTES TO CONDENSED CONSOLIDATED FINANCIAL STATEMENTS**
(Unaudited)

**PNM**

*New Mexico General Rate Case*

*2025 Rate Request*

On June 14, 2024, PNM filed an application with the NMPRC for a general increase in retail electric rates. The proposed base rate changes would be implemented in two phases, with the first phase effective July 1, 2025 and the second phase effective January 1, 2026. Key aspects of PNM's request include:

- Recovery on total rate base of $3.0 billion, based on a FTY with the 12 months ending June 30, 2026
- An increase of $174.3 million in retail revenues, comprised of a $92.2 million increase in base rates and a $82.1 million increase in revenues collected under PNM's FPPAC
- Drivers of revenue deficiency:
  - Needed investments across distribution, transmission, and generation facilities to ensure safe, reliable delivery of electricity
  - Increased operations and maintenance expenses to meet operational needs, including wildfire risk mitigation
  - Costs associated with ESAs, previously approved by the NMPRC, necessary to serve our customers
  - ROE of 10.45%
  - Proposed capital structure of 52.5% equity
  - An increased cost of borrowing
  - Adjustments to Four Corners depreciation rates to recover remaining plant investments through July 2031, the expected abandonment date of the facility
- Proposed ratemaking treatment of ESAs to be recovered through PNM's FPPAC beginning July 1, 2025

On November 26, 2024, PNM filed an unopposed comprehensive stipulation with the NMPRC. Key components agreed upon by the signatories are as follows:

- Overall revenue requirement increase of $105.0 million with the first phase effective July 1, 2025 and the second phase effective April 1, 2026
- ROE of 9.45%
- Capital structure of 51.0% equity
- Maintain currently approved depreciation rates for Four Corners as established in PNM's 2024 Rate Change and PNM's NM 2015 Rate Case
- Modification of PNM's current amortization period through December 31, 2028 on the unprotected Excess Deferred Federal Income Taxes ("EDFIT") regulatory liability to reflect amortization of remaining unprotected EDFIT through December 31, 2027
- Costs associated with ESAs shall be recovered through base rates
  - PNM will establish a regulatory asset or regulatory liability for the difference in actual ESA costs compared to the forecasted $82.1 million included in base rates in the test period and thereafter until new rates are effective from PNM's next general rate case filing. The regulatory asset or regulatory liability will be subject to NMPRC approval in PNM's next rate case
- PNM will establish a regulatory liability associated with investment tax credits for the Sandia energy storage system as proposed in its application
- PNM will establish a regulatory liability equal to the return on legacy meters currently included in rates, as the legacy meters are retired during PNM's deployment of its approved Grid Modernization Plan

A hearing was held on February 17 and 18, 2025. On April 8, 2025, the hearing examiners issued a certification of stipulation recommending approval of the unopposed stipulation. PNM cannot predict the outcome of this matter.

*2024 Rate Change*

In December 2022, PNM filed an application with the NMPRC for a general increase in retail electric rates. On January 3, 2024, the NMPRC issued a final order authorizing PNM to implement an increase in non-fuel base rates of $15.3 million, effective for service beginning January 15, 2024. The final order includes an ROE of 9.26% and a capital structure of 49.61% equity, 50.10% debt, and 0.29% preferred stock. As a result of the final order, PNM recorded a regulatory disallowance of $55.5 million and a corresponding reduction to Utility Plant in the year ended December 31, 2023, after accounting for previous impairments, to reflect the remedy adopted in the Final Order for Four Corners. In addition, PNM had recorded a reduction to electric operating revenues of $38.4 million with a corresponding current regulatory liability of $19.2 million and a deferred

Table of Contents

**TXNM ENERGY, INC. AND SUBSIDIARIES**
**PUBLIC SERVICE COMPANY OF NEW MEXICO AND SUBSIDIARIES**
**TEXAS-NEW MEXICO POWER COMPANY AND SUBSIDIARIES**

**NOTES TO CONDENSED CONSOLIDATED FINANCIAL STATEMENTS**
(Unaudited)

regulatory liability of $19.2 million for the PVNGS rate refunds that are being returned to customers over a two-year period ending March 2026. PNM had also recorded a regulatory disallowance of $8.2 million and a corresponding reduction to Utility Plant for the disallowance of CWIP from PVNGS.

In March 2024, notice of appeals were separately filed with the NM Supreme Court by NEE and PNM, and a joint notice of appeal was filed by the NM Department of Justice, Bernalillo County, and ABCWUA. NEE's appeal was subsequently consolidated with the joint notice of appeal. In the statements of issues submitted in the parties' appellate dockets, PNM took issue with the NMPRC's ruling on capital structure; other appellants primarily challenged the NMPRC rulings related to Four Corners and Palo Verde cost recovery. PNM cannot predict the outcome of this matter.

*Renewable Energy Portfolio Standard*

As discussed in Note 11, the ETA amends the REA including removal of diversity requirements and certain customer caps and exemptions relating to the application of the RPS under the REA. The REA provides for streamlined proceedings for approval of utilities' renewable energy procurement plans, assures that utilities recover costs incurred consistent with approved procurement plans, and requires the NMPRC to establish a Reasonable Cost Threshold ("RCT") for the procurement of renewable resources to prevent excessive costs being added to rates. The ETA sets a RCT of $60 per MWh, adjusted for inflation, using an average annual levelized resource cost basis. PNM makes renewable procurements consistent with the NMPRC approved plans and recovers certain renewable procurement costs from customers through the renewable energy rider billed on a KWh basis.

Included in PNM's approved procurement plans are the following renewable energy resources:

- 158 MW of PNM-owned solar-PV facilities
- A PPA through 2044 for the output of New Mexico Wind, having a current aggregate capacity of 200 MW, and a PPA through 2035 for the output of Red Mesa Wind, having an aggregate capacity of 102 MW
- A PPA through 2040 for 140 MW of output from La Joya Wind II
- A PPA through 2042 for the output of the Lightning Dock Geothermal facility with a capacity of 11 MW
- Solar distributed generation, aggregating 314.9 MW at March 31, 2025, owned by customers or third parties from whom PNM purchases any net excess output and RECs

The NMPRC has authorized PNM to recover certain renewable procurement costs through a rate rider billed on a per KWh basis. In its 2025 renewable energy procurement plan, which became effective on January 1, 2025, PNM proposed to collect $58.7 million for the year. PNM recorded revenues from the rider of $17.0 million and $15.3 million in the three months ended March 31, 2025 and 2024.

Under the renewable rider, if PNM's earned rate of return on jurisdictional equity in a calendar year, adjusted for items not representative of normal operations, exceeds the NMPRC-approved rate by 0.5%, PNM is required to refund the excess to customers during May through December of the following year. PNM did not exceed such limitation in 2024.

*Energy Efficiency and Load Management*

*Program Costs and Incentives/Disincentives*

The New Mexico Efficient Use of Energy Act ("EUEA") requires public utilities to achieve specified levels of energy savings and to obtain NMPRC approval to implement energy efficiency and load management programs. The EUEA requires the NMPRC to remove utility disincentives to implementing energy efficiency and load management programs and to provide incentives for such programs. The NMPRC has adopted a rule to implement this act. PNM's costs to implement approved programs and incentives are recovered through a rate rider. During the 2019 New Mexico legislative session, the EUEA was amended to, among other things, include a decoupling mechanism for disincentives, preclude a reduction to a utility's ROE based on approval of disincentive or incentive mechanisms, establish energy savings targets for the period 2021 through 2025, and require that annual program funding be 3% to 5% of an electric utility's annual customer bills excluding gross receipt taxes, franchise and right-of-way access fees, provided that a customer's annual cost does not exceed seventy-five thousand dollars.

In 2023, PNM filed an application for energy efficiency and load management programs to be offered in 2024, 2025, and 2026 (the "2024 Plan"). The 2024 Plan proposed to continue ten existing energy efficiency programs with modification and a total annual budget of $34.5 million in 2024, $35.4 million in 2025, and $36.5 million in 2026. The application also

Table of Contents



sought approval of an annual base incentive of 7.1% of the portfolio budget and a sliding scale that provides additional incentive for additional energy saved as a percentage of program cost, up to the maximum allowed by the energy efficiency rule which for PNM is 8.82%. On January 26, 2024, the hearing examiners in the case issued a RD. The RD largely approved PNM's 2024 Plan but with modifications that include the pursuit of demand response resources, additional analysis in future filings, adjustments to certain energy efficiency programs, and modification of the incentive sliding scale cap to reflect a new maximum. On March 7, 2024, the NMPRC approved the RD in its entirety.

*Integrated Resource Plans*

NMPRC rules require that investor-owned utilities file an IRP every three years and is required to cover a 20-year planning period and contain an action plan covering the first three years of that period. The IRP establishes a collaborative facilitated process for a utility and stakeholders to agree on a statement of need for potential new or additional resources, as well as an action plan to guide procurement or development of resources to meet the stated need. A most-cost-effective portfolio of resources shall be derived from the statement of need analysis. The statement of need and action plan must be accepted before the utility begins the resource solicitation process pursuant to the IRP Rule. Following acceptance of the statement of need and action plan, a utility will provide the NMPRC and intervenors drafts of the RFP and a timeline for issuing, receiving, evaluating, and ranking bids. The NMPRC will then appoint an Independent Monitor ("IM") to oversee the RFP process, which allows for parties and the IM to comment on the RFP consistency with the IRP, after which the utility issues the RFP. Within 120 days of receiving bids the utility shall provide the IM with results including pricing and non-price evaluation criteria, ranking of bids, chosen portfolio and alternatives that also meet the needs; the IM then rules on the fairness of the RFP execution. Acceptance of the statement of need and action plan will not constitute a finding of prudency or pre-approval of costs associated with the additional resources. Following the RFP and IM processes, the utility may apply for approvals, and any costs incurred to implement the action plan will be considered in a general rate case and/or resource acquisition proceeding.

*2023 IRP*

On December 15, 2023, PNM filed its 2023 IRP with a continued focus on a carbon-free energy system by 2040. The plan highlights the need for the significant sustained addition of resources over the next two decades, replacing retiring or expiring capacity, meeting concurrent load growth, while reducing the carbon intensity of PNM's portfolio. On April 4, 2024, the NMPRC accepted PNM's 2023 IRP.

On December 30, 2024, PNM issued its 2029-2032 RFP for at least 900 MW of new energy resources to come online between 2029 and 2032, with at least 500 MW needed by 2030. The RFP is consistent with the needs identified in PNM's 2023 IRP, which identified a range of 900 to 2,900 MW of new capacity needed by 2032, depending on the type of resources selected. The 2029-2032 RFP is anticipated to identify potential replacement resources for PNM's current natural gas generation capacity as well as PNM's ownership interest in Four Corners.

*2028 Resource Application*

On November 22, 2024, PNM filed an application with the NMPRC seeking approval of ESAs, a PPA, and a CCN for system resources in 2028 to be available to meet summer 2028 customer needs. PNM's request includes:

- Two 150 MW ESAs
- A 167 MW PPA for the Valencia power plant through 2039
- A CCN for a 100 MW solar facility and a 30 MW battery to be PNM-owned and located in San Juan County. The request provides the opportunity to increase the 30 MW battery by an additional 20 MW

On March 12, 2025, PNM and intervening parties filed an unopposed comprehensive stipulation with the NMPRC. The stipulation supports approval of PNM's application, including the proposed option to increase the 30 MW battery by an additional 20 MW. A hearing was held April 2, 2025 and on May 6, 2025, the hearing examiners issued a certification of stipulation recommending approval of the unopposed stipulation.

*Grid Modernization Plan*

In October 2022, in compliance with New Mexico Grid Modernization Statute, PNM filed its Grid Modernization Plan with the NMPRC. The projects included in the application improve customers' ability to customize their use of energy and ensure that customers, including low-income customers, are a top priority and will benefit consistent with the Grid

Table of Contents

**TXNM ENERGY, INC. AND SUBSIDIARIES**
**PUBLIC SERVICE COMPANY OF NEW MEXICO AND SUBSIDIARIES**
**TEXAS-NEW MEXICO POWER COMPANY AND SUBSIDIARIES**

**NOTES TO CONDENSED CONSOLIDATED FINANCIAL STATEMENTS**
(Unaudited)

Modernization Statute. PNM's proposal to modernize its electricity grid through infrastructure and technology improvements also increases the efficiency, reliability, resilience, and security of PNM's electric system. PNM's application included grid modernization investments of approximately $344 million for the first six years of a broader 11-year strategy. The approved rate rider will recover capital costs, operating expenses, and taxes associated with the investments included in the plan. On October 17, 2024, the NMPRC issued a final order which largely approved PNM's application with minor modifications.

*Transportation and Electrification Program (TEP)*

On June 1, 2023, PNM filed its 2024-2026 TEP with the NMPRC, requesting approval of a $37.1 million total three-year budget and continuation of the current TEP Rider. Approximately 22% of the budget, $8.0 million, will be dedicated to low-income customers. On February 2, 2024, the hearing examiners in the case issued a RD largely approving PNM's 2024-2026 TEP but with certain modifications. On February 23, 2024, the NMPRC approved the RD with modifications that reduced the three-year budget by $4.0 million, for a total revised budget of $32.9 million. The TEP rider became effective on April 26, 2024.

**TNMP**

*Sales and Use Tax Refund*

On March 12, 2025, TNMP filed a refund claim with the Texas Comptroller's office for overpaid sales and use taxes primarily related to asset purchases. The $33.6 million refund request covers periods from January, 2022 to October, 2024. Although the Company is unable to predict the outcome of the refund claim, the bulk of any refund amounts received, net of consultant fees, are expected to be applied to 2025 TNMP capital projects.

*Transmission Cost of Service Rates*

TNMP can update its TCOS rates twice per year to reflect changes in its invested capital although updates are not allowed while a general rate case is in process. Updated rates reflect the addition and retirement of transmission facilities, including appropriate depreciation, federal income tax and other associated taxes, and the approved rate of return on such facilities. The following sets forth TNMP's recent interim transmission cost rate increases:

| Effective Date | Approved Increase in Rate Base | Annual Increase in Revenue |
|---|---|---|
| | (In millions) | |
| September 6, 2023 | $ 21.4 | $ 4.2 |
| March 15, 2024 | 97.4 | 13.1 |
| September 20, 2024 | 20.6 | 3.9 |
| March 25, 2025 | 83.5 | 11.5 |

*Periodic Distribution Rate Adjustment*

PUCT rules permit interim rate adjustments twice per year to reflect changes in investments in distribution assets. Additionally, a DCRF may be filed during a pending rate case proceeding as long as that DCRF request is not filed until the 185th day after the rate case proceeding was initiated. The following sets forth TNMP's recent interim distribution rate increases:

| Effective Date | Approved Increase in Rate Base | Annual Increase in Revenue |
|---|---|---|
| | (In millions) | |
| September 1, 2023 | $ 157.0 | $ 14.5 |
| July 28, 2024 | 205.9 | 15.6 |
| November 17, 2024 | 43.7 | 7.7 |

On March 14, 2025, TNMP filed its 2025 DCRF that requested an increase in TNMP annual distribution revenue requirement of $25.0 million based on an increase in rate base of $176.6 million. The case is pending review by the PUCT.

Table of Contents

**TXNM ENERGY, INC. AND SUBSIDIARIES**
**PUBLIC SERVICE COMPANY OF NEW MEXICO AND SUBSIDIARIES**
**TEXAS-NEW MEXICO POWER COMPANY AND SUBSIDIARIES**

**NOTES TO CONDENSED CONSOLIDATED FINANCIAL STATEMENTS**
(Unaudited)

*Energy Efficiency*

TNMP recovers the costs of its energy efficiency programs through an energy efficiency cost recovery factor ("EECRF"), which includes projected program costs, under and over collected costs from prior years, rate case expenses, and performance bonuses (if programs exceed mandated savings goals). On May 26, 2023, TNMP filed its request to adjust the EECRF to reflect changes in costs for 2024. On September 28, 2023, the PUCT approved a unanimous stipulation, authorizing recovery of $6.6 million, including a performance bonus of $1.2 million based on TNMP's energy efficiency achievements in the 2022 plan year and became effective March 1, 2024. On May 31, 2024, TNMP filed its request to adjust the EECRF to reflect changes in costs for 2025. On October 24, 2024, the PUCT approved the total amount requested, authorizing recovery of $7.0 million, which includes a performance bonus of $1.3 million based on TNMP's energy efficiency achievements in the 2023 plan year and became effective March 1, 2025.

*Hurricane Beryl*

On July 8, 2024, Hurricane Beryl made landfall in the Texas Gulf Coast leaving approximately 116,000 customers in the TNMP service area without power. As of March 31, 2025, TNMP incurred $53.2 million of costs, of which $32.4 million has been recorded in Utility Plant and $20.8 million has been recorded as a Regulatory Asset on the Condensed Consolidated Balance Sheets. TNMP will seek collection of such costs in a future regulatory proceeding.

*System Resiliency Plan ("SRP")*

In 2023, the Texas Legislature enacted House Bill No, 2555 ("HB 2555"), permitting an electric utility to seek approval of, and cost recovery for, a system resiliency plan. On August 28, 2024, TNMP filed its first SRP with the PUCT designed to benefit customers through enhanced resiliency of its distribution system, as intended under HB 2555. The SRP includes approximately $600 million of capital investments and approximately $151 million of other related costs over three years and was developed using a comprehensive and data-driven approach which evaluated various types of resiliency events posing material risk to the safe and reliable operation of TNMP's distribution system. TNMP's service territory includes non-contiguous areas across different regions of Texas, ranging from small communities and rural areas to communities around large metropolitan areas, each with unique risks. Investments in the SRP are prioritized based on customer benefit, physical protection of infrastructure, foundational investments in operational and cybersecurity technologies, and wildfire risk reduction and are focused on lower-performing areas in the context of reliability. Eight different resiliency measures are outlined in the SRP with associated programs and infrastructure impacts to improve the system's ability to prevent, withstand, mitigate and/or more promptly recover from resiliency events: distribution system resiliency, distribution system protection modernization, vegetation management, wildfire mitigation, flood mitigation, enhanced operations system technology, cybersecurity, and physical security resiliency. Recovery of investments and costs are permissible primarily through semi-annual DCRF filings, with deferral of depreciation and other certain expenses until recovery begins.

On December 11, 2024, TNMP filed an unopposed settlement with the PUCT. The settlement includes $565.8 million of capital investments over 2025 through 2027, reflecting 94% of TNMP's proposed plan investments. The settlement also encompasses $128.2 million of operations and maintenance expenses associated with several programs, including vegetation management and wildfire mitigation. On March 26, 2025, TNMP received the final order from the PUCT which included modifications reflecting capital investments of $545.8 million and $86.1 million of operating and maintenance costs.

**(13) Lease Commitments**

The Company leases office buildings, vehicles, energy storage facilities, and other equipment. In addition, certain rights-of-way agreements are classified as leases. All of the Company's leases with terms in excess of one year are recorded on the balance sheet by recording a present value lease liability and a corresponding right-of-use asset. Operating lease expense is recognized within operating expenses according to the use of the asset on a straight-line basis. Financing lease costs, which are comprised primarily of fleet and office equipment leases commencing after January 1, 2019, are recognized by amortizing the right-of-use asset on a straight-line basis and by recording interest expense on the lease liability. Financing lease right-of-use assets amortization is reflected in depreciation and amortization and interest on financing lease liabilities is reflected as interest charges on the Company's Condensed Consolidated Statements of Earnings. See additional discussion of the Company's leasing activities in Note 8 of the Notes to Consolidated Financial Statements in the 2024 Annual Reports on Form 10-K.

Table of Contents

**TXNM ENERGY, INC. AND SUBSIDIARIES**
**PUBLIC SERVICE COMPANY OF NEW MEXICO AND SUBSIDIARIES**
**TEXAS-NEW MEXICO POWER COMPANY AND SUBSIDIARIES**

**NOTES TO CONDENSED CONSOLIDATED FINANCIAL STATEMENTS**
(Unaudited)

*PVNGS*

In 1985 and 1986, PNM entered into leases for its interest in PVNGS Unit 1 and 2. The leases initially were scheduled to expire in January 2015 for four Unit 1 leases and January 2016 for four Unit 2 leases. Following procedures set forth in the PVNGS leases, PNM notified four of the lessors under the Unit 1 leases and one lessor under the Unit 2 lease that it would elect to renew those leases on the expiration date of the original leases. The four Unit 1 leases expired in January 2023 and the one Unit 2 lease expired in January 2024. PNM has no further lease payments related to PVNGS Unit 1 or 2.

On April 5, 2021, PNM and Salt River Project entered into an Asset Purchase and Sale Agreement, pursuant to which PNM agreed to sell to Salt River Project certain PNM-owned assets and nuclear fuel necessary to the ongoing operation and maintenance of leased capacity in PVNGS Unit 1 and Unit 2. In January 2023, the Unit 1 leases expired, and PNM closed on the associated sale to Salt River Project. In January 2024, the Unit 2 leases expired, and PNM closed on the associated sale to Salt River Project, receiving payments totaling $3.4 million, of which $2.8 million was recorded as a reduction to Net utility plant on the Condensed Consolidated Balance Sheets and was presented as cash flows from investing activities on the Condensed Consolidated Statement of Cash Flows. In addition, $0.6 million was recorded as a reduction to Materials, supplies and fuel stock on the Condensed Consolidated Balance Sheets and was presented as cash flows from operating activities on the Condensed Consolidated Statement of Cash Flows.

*Land Easements and Rights-of-Way*

Many of PNM's electric transmission and distribution facilities are located on lands that require the grant of rights-of-way from governmental entities, Native American tribes, or private parties. PNM has completed several renewals of rights-of-way, the largest of which is a renewal with the Navajo Nation. PNM is obligated to pay the Navajo Nation annual payments of $6.0 million, subject to adjustment each year based on the Consumer Price Index, through 2029. PNM's April 2025 payment for the amount due under the Navajo Nation right-of-way lease was $8.8 million, which included amounts due under the Consumer Price Index adjustment. Changes in the Consumer Price Index subsequent to January 1, 2019 are considered variable lease payments.

PNM has other prepaid rights-of-way agreements that are not accounted for as leases or recognized as a component of plant in service. PNM reflects the unamortized balance of these prepayments in other deferred charges on the Condensed Consolidated Balance Sheets and recognizes amortization expense associated with these agreements in the Condensed Consolidated Statement of Earnings over their term. As of March 31, 2025 and December 31, 2024, the unamortized balance of these rights-of-ways was $70.8 million and $67.1 million. PNM recognized amortization expense associated with these agreements of $1.1 million and $1.1 million in the three months ended March 31, 2025 and 2024.

*Fleet Vehicles and Equipment*

Fleet vehicle and equipment leases commencing on or after January 1, 2019 are classified as financing leases. Fleet vehicle and equipment leases existing as of December 31, 2018 are classified as operating leases. The Company's fleet vehicle and equipment lease agreements include non-lease components for insignificant administrative and other costs that are billed over the life of the agreement. At March 31, 2025, residual value guarantees on fleet vehicle and equipment leases are $0.7 million, $0.8 million, and $1.5 million for PNM, TNMP, and TXNM Consolidated.

*Energy Storage Agreements*

The Company has ESAs with fixed payments over the life of the agreements, that are accounted for as operating leases, for which Company records the initial lease liabilities and corresponding right-of-use assets. The Company also has ESAs with monthly payments that vary, depending on the available capacity of the energy storage facility, that are also accounted for as operating leases, However due to the variable nature of the consideration, these agreements do not require a lease liability or a right-of-use asset to be recorded upon inception. Expenses for this type of lease are reflected in variable lease expense in the tables below. In addition, the Company has elected to separate lease components from non-lease components for ESAs and accordingly, does not include non-lease components in the measurement of the lease liability or right-of-use asset. The non-lease components, which are not included in the measurement of the lease liability or the corresponding right-of-use asset, comprise 25.5% of the value of the agreements.

Table of Contents

**TXNM ENERGY, INC. AND SUBSIDIARIES**
**PUBLIC SERVICE COMPANY OF NEW MEXICO AND SUBSIDIARIES**
**TEXAS-NEW MEXICO POWER COMPANY AND SUBSIDIARIES**

**NOTES TO CONDENSED CONSOLIDATED FINANCIAL STATEMENTS**
(Unaudited)

Information related to the Company's operating leases recorded on the Condensed Consolidated Balance Sheets is presented below:

| | March 31, 2025 | | | December 31, 2024 | | |
|---|---|---|---|---|---|---|
| | PNM | TNMP | TXNM | PNM | TNMP | TXNM |
| | (In thousands) | | | | | |
| Operating leases: | | | | | | |
| Operating lease assets, net of amortization | $ 268,291 | $ 581 | $ 269,399 | $ 271,433 | $ 923 | $ 272,894 |
| Current portion of operating lease liabilities | 13,958 | 527 | 14,523 | 13,542 | 713 | 14,293 |
| Long-term portion of operating lease liabilities | 252,963 | 34 | 253,493 | 254,702 | 167 | 255,376 |

As discussed above, the Company classifies its fleet vehicle and equipment leases and its office equipment leases commencing on or after January 1, 2019 as financing leases. Information related to the Company's financing leases recorded on the Condensed Consolidated Balance Sheets is presented below:

| | March 31, 2025 | | | December 31, 2024 | | |
|---|---|---|---|---|---|---|
| | PNM | TNMP | TXNM | PNM | TNMP | TXNM |
| | (In thousands) | | | | | |
| Financing leases: | | | | | | |
| Non-utility property | $ 24,877 | $ 23,938 | $ 50,153 | $ 24,548 | $ 24,420 | $ 50,144 |
| Accumulated depreciation | (11,165) | (13,331) | (24,762) | (10,997) | (13,411) | (24,604) |
| Non-utility property, net | 13,712 | 10,607 | 25,391 | 13,551 | 11,009 | 25,540 |
| | | | | | | |
| Other current liabilities | $ 4,487 | $ 4,498 | $ 9,307 | $ 4,311 | $ 4,527 | $ 9,126 |
| Other deferred credits | 9,249 | 6,132 | 16,153 | 9,262 | 6,504 | 16,470 |

Information concerning the weighted average remaining lease terms and the weighted average discount rates used to determine the Company's lease liabilities is presented below:

| | March 31, 2025 | | | December 31, 2024 | | |
|---|---|---|---|---|---|---|
| | PNM | TNMP | TXNM | PNM | TNMP | TXNM |
| Weighted average remaining lease term (years): | | | | | | |
| Operating leases | 17.25 | 0.75 | 17.20 | 17.52 | 1.10 | 17.45 |
| Financing leases | 3.39 | 2.72 | 3.11 | 3.51 | 2.80 | 3.20 |
| Weighted average discount rate: | | | | | | |
| Operating leases | 5.68 % | 4.43 % | 5.23 % | 5.68 % | 4.41 % | 5.68 % |
| Financing leases | 5.19 % | 5.31 % | 5.68 % | 5.08 % | 5.19 % | 5.12 % |

Table of Contents

**TXNM ENERGY, INC. AND SUBSIDIARIES**
**PUBLIC SERVICE COMPANY OF NEW MEXICO AND SUBSIDIARIES**
**TEXAS-NEW MEXICO POWER COMPANY AND SUBSIDIARIES**

**NOTES TO CONDENSED CONSOLIDATED FINANCIAL STATEMENTS**
(Unaudited)

Information for the components of lease expense is as follows:

| | Three Months Ended March 31, 2025 | | |
|---|---|---|---|
| | PNM | TNMP | TXNM |
| | (In thousands) | | |
| Operating lease cost: | | | |
| Energy storage leases | $ 5,083 | $ — | $ 5,083 |
| Other operating leases | 1,863 | 154 | 2,036 |
| Amounts capitalized | (11) | (130) | (141) |
| Total operating lease expense | 6,935 | 24 | 6,978 |
| Financing lease cost: | | | |
| Amortization of right-of-use assets | 1,201 | 1,294 | 2,588 |
| Interest on lease liabilities | 180 | 144 | 339 |
| Amounts capitalized | (880) | (1,195) | (2,074) |
| Total financing lease expense | 501 | 243 | 853 |
| | | | |
| Variable lease expense | 6,556 | — | 6,556 |
| Short-term lease expense | 191 | 4 | 225 |
| Total lease expense for the period | $ 14,183 | $ 271 | $ 14,612 |

| | Three Months Ended March 31, 2024 | | |
|---|---|---|---|
| | PNM | TNMP | TXNM |
| | (In thousands) | | |
| Operating lease cost: | | | |
| Energy storage leases | $ 2,947 | $ — | $ 2,947 |
| Other operating leases | 2,059 | 270 | 2,329 |
| Amounts capitalized | (35) | (232) | (267) |
| Total operating lease expense | 4,971 | 38 | 5,009 |
| Financing lease cost: | | | |
| Amortization of right-of-use assets | 1,218 | 1,316 | 2,542 |
| Interest on lease liabilities | 144 | 152 | 297 |
| Amounts capitalized | (841) | (1,182) | (2,023) |
| Total financing lease expense | 521 | 286 | 816 |
| | | | |
| Variable lease expense | 360 | — | 360 |
| Short-term lease expense | 204 | 6 | 216 |
| Total lease expense for the period | $ 6,056 | $ 330 | $ 6,401 |

Table of Contents

**TXNM ENERGY, INC. AND SUBSIDIARIES**
**PUBLIC SERVICE COMPANY OF NEW MEXICO AND SUBSIDIARIES**
**TEXAS-NEW MEXICO POWER COMPANY AND SUBSIDIARIES**

**NOTES TO CONDENSED CONSOLIDATED FINANCIAL STATEMENTS**
(Unaudited)

Supplemental cash flow information related to the Company's leases is as follows:

| | Three Months Ended March 31, 2025 | | | Three Months Ended March 31, 2024 | | |
|---|---|---|---|---|---|---|
| | PNM | TNMP | TXNM | PNM | TNMP | TXNM |
| | (In thousands) | | | | | |
| Cash paid for amounts included in the measurement of lease liabilities: | | | | | | |
| Operating cash flows from operating leases | $ 5,116 | $ 13 | $ 5,145 | $ 3,826 | $ 14 | $ 3,840 |
| Operating cash flows from financing leases | 62 | 25 | 102 | 44 | 29 | 74 |
| Finance cash flows from financing leases | 436 | 217 | 741 | 464 | 256 | 728 |
| Non-cash information related to right-of-use assets obtained in exchange for lease obligations: | | | | | | |
| Operating leases | $ 49 | $ 4 | $ 52 | $ 27 | $ 63 | $ 90 |
| Financing leases | 1,368 | 891 | 2,449 | 263 | 1,040 | 1,398 |

Capitalized lease costs are reflected as investing activities on the Company's Condensed Consolidated Statements of Cash Flows for the three months ended March 31, 2025 and 2024.

Future expected lease payments are shown below:

| | As of March 31, 2025 | | | | | | | |
|---|---|---|---|---|---|---|---|---|
| | PNM | | | TNMP | | TXNM | | |
| | | Operating | | | | | Operating | |
| | Financing | Energy Storage | Other | Financing | Operating | Financing | Energy Storage | Other |
| | (In thousands) | | | | | | | |
| Remainder of 2025 | $ 3,879 | $ 15,250 | $ 7,060 | $ 3,854 | $ 547 | $ 8,009 | $ 15,250 | $ 7,657 |
| 2026 | 4,672 | 20,333 | 7,045 | 3,867 | 14 | 8,905 | 20,333 | 7,128 |
| 2027 | 3,372 | 20,333 | 7,049 | 2,395 | 14 | 6,111 | 20,333 | 7,134 |
| 2028 | 1,969 | 20,333 | 7,052 | 982 | 11 | 3,114 | 20,333 | 7,135 |
| 2029 | 672 | 20,333 | 7,039 | 318 | — | 1,024 | 20,333 | 7,114 |
| Later years | 230 | 287,100 | 3,660 | 4 | — | 234 | 287,100 | 4,012 |
| Total minimum lease payments | 14,794 | 383,682 | 38,905 | 11,420 | 586 | 27,397 | 383,682 | 40,180 |
| Less: Imputed interest | 1,058 | 151,525 | 4,141 | 790 | 25 | 1,937 | 151,525 | 4,321 |
| Lease liabilities | $ 13,736 | $ 232,157 | $ 34,764 | $ 10,630 | $ 561 | $ 25,460 | $ 232,157 | $ 35,859 |

The above table includes $13.2 million, $10.2 million, and $23.6 million for PNM, TNMP, and TXNM at March 31, 2025 for expected future payments on fleet vehicle and equipment leases that could be avoided if the leased assets were returned and the lessor is able to recover estimated market value for the equipment from third parties.

At March 31, 2025, the Company has various lease arrangements that have been executed but have not yet commenced, which are primarily related to ESAs. The Company currently expects lease commencement dates in 2025 and 2029, with lease terms expiring in 2045 and 2044, and will recognize lease assets and liabilities upon lease commencement. The expected total fixed consideration to be paid for these arrangements, which includes non-lease payments, is approximately $226.3 million over the 20-year terms of the agreements.

**(14) Income Taxes**

The Company makes an estimate of its anticipated effective tax rate for the year as of the end of each quarterly period within its fiscal year. In interim periods, income tax expense is calculated by applying the anticipated annual effective tax rate to year-to-date earnings before income taxes. Certain unusual or infrequently occurring items are excluded from the estimated annual rate calculation. Such items include regulatory disallowances and excess tax benefits or deficiencies related to stock awards. At March 31, 2025, TXNM, PNM, and TNMP estimated their effective income tax rates for the year ended December

Table of Contents

**TXNM ENERGY, INC. AND SUBSIDIARIES**
**PUBLIC SERVICE COMPANY OF NEW MEXICO AND SUBSIDIARIES**
**TEXAS-NEW MEXICO POWER COMPANY AND SUBSIDIARIES**

**NOTES TO CONDENSED CONSOLIDATED FINANCIAL STATEMENTS**
(Unaudited)

31, 2025 would be 12.34%, 10.42%, and 20.21%. The primary difference between the statutory income tax rates and the effective tax rates is the effect of the reduction in income tax expense resulting from the amortization of excess deferred federal income taxes.

During the three months ended March 31, 2025, income tax expense calculated by applying the expected annual effective income tax rate to earnings before income taxes was further decreased by excess tax benefits related to stock awards of $0.2 million for TXNM, of which $0.1 million was allocated to PNM and $0.1 million was allocated to TNMP.

Beginning February 2018, PNM's NM 2016 Rate Case reflected the reduction in the federal corporate income tax rate resulting from enactment of legislation commonly known as the Tax Cuts and Jobs Act (the "Tax Act"), including amortization of excess deferred federal income taxes. In accordance with the order in that case, PNM is returning the protected portion of excess deferred federal income taxes to customers over the average remaining life of plant in service as of December 31, 2017, and had been returning the unprotected portion of excess deferred federal income taxes to customers over a period of approximately twenty-three years. Pursuant to the final order in the PNM 2024 Rate Change, the remaining balance of $62.7 million of unprotected excess deferred income taxes is being returned over a four-year period. The approved settlement in the TNMP 2018 Rate Case includes a reduction in customer rates to reflect the impacts of the Tax Act beginning on January 1, 2019. TXNM, PNM, and TNMP will amortize federal excess deferred income taxes of $25.6 million, $22.9 million, and $2.7 million in 2025. See additional discussion of the impacts of the Tax Act in Note 18 of the Notes to Consolidated Financial Statements in the 2024 Annual Reports on Form 10-K.

**(15) Related Party Transactions**

TXNM, PNM, TNMP, and NMRD are considered related parties, as is PNMR Services Company, a wholly-owned subsidiary of TXNM that provides corporate services to TXNM and its subsidiaries in accordance with shared services agreements. These services are billed at cost on a monthly basis to the business units. In addition, prior to the sale of NMRD, PNM purchased renewable energy from certain NMRD-owned facilities at a fixed price per MWh of energy produced. On February 27, 2024, PNMR Development and AEP OnSite Partners sold their respective interests in NMRD and the table below reflects transactions with NMRD prior to the sale. The table below summarizes the nature and amount of related party transactions of TXNM, PNM, TNMP, and NMRD:

| | Three Months Ended March 31, | |
|---|---|---|
| | 2025 | 2024 |
| | (In thousands) | |
| Services billings: | | |
| TXNM to PNM | $ 32,087 | $ 35,407 |
| TXNM to TNMP | 13,376 | 14,237 |
| PNM to TNMP | 79 | 81 |
| TNMP to TXNM | 28 | 10 |
| TXNM to NMRD | — | 66 |
| Renewable energy purchases: | | |
| PNM from NMRD | — | 1,523 |
| Interest billings: | | |
| TXNM to PNM | 8 | 14 |
| PNM to TXNM | 133 | 155 |
| TXNM to TNMP | 145 | 14 |

Table of Contents

## ITEM 2. MANAGEMENT'S DISCUSSION AND ANALYSIS OF FINANCIAL CONDITION AND RESULTS OF OPERATIONS

The following Management's Discussion and Analysis of Financial Condition and Results of Operations for TXNM is presented on a combined basis, including certain information applicable to PNM and TNMP. The MD&A for PNM and TNMP is presented as permitted by Form 10-Q General Instruction H(2). This report uses the term "Company" when discussing matters of common applicability to TXNM, PNM, and TNMP. A reference to a "Note" in this Item 2 refers to the accompanying Notes to Condensed Consolidated Financial Statements (Unaudited) included in Item 1, unless otherwise specified. Certain of the tables below may not appear visually accurate due to rounding.

### *MD&A FOR TXNM*

### EXECUTIVE SUMMARY

**Overview**

TXNM is a holding company with two regulated electric utilities, PNM and TNMP, serving approximately 837,000 residential, commercial, and industrial customers in New Mexico and Texas. TXNM strives to create a clean and bright energy future for customers, communities, and shareholders. TXNM's strategy and decision-making are focused on safely providing reliable, affordable, and environmentally responsible power built on a foundation of sustainability.

***Recent Developments***

*System Resiliency Plan ("SRP")*

In 2023, the Texas Legislature enacted HB 2555, permitting an electric utility to seek approval of, and cost recovery for a system resiliency plan. On March 26, 2025, TNMP received the final order from the PUCT approving TNMP's SRP which is designed to benefit customers through enhanced resiliency of its distribution system, as intended under HB 2555. Investments in the SRP are prioritized based on customer benefit, physical protection of infrastructure, foundational investments in operational and cybersecurity technologies, and wildfire risk reduction, and are focused on lower-performing areas in the context of reliability.

*2025 Rate Request*

In June 2024, PNM filed an application with the NMPRC for a general increase in retail electric rates. The application proposes an increase of $174.3 million in retail revenues which is comprised of a $92.2 million increase in base rates and a $82.1 million increase in revenues collected under PNM's FPPAC and reflects an ROE of 10.45%. The proposed base rate changes would be implemented in two phases, with the first phase effective July 1, 2025 and the second phase effective January 1, 2026. The requested changes reflect recovery of needed investments across distribution, transmission, and generation facilities to ensure safe reliable delivery of electricity, increased operations and maintenance expenses to meet operational needs including wildfire risk mitigation, necessary costs to service customers associated with ESAs previously approved by the NMPRC, and adjustments to Four Corners depreciation rates to recover remaining plant investments through July 2031, the expected abandonment date of the facility.

In November 2024, PNM filed its unopposed comprehensive stipulation with the NMPRC. Key components include an increase of $105.0 million in retail revenues with the first phase effective July 1, 2025, and the second phase effective April 1, 2026, reflecting an ROE of 9.45%. On April 8, 2025, the hearing examiners issued a certification of stipulation recommending approval of the unopposed stipulation.

***Vision, Values, and Business Objectives***

TXNM's vision is to create a clean and bright energy future while fulfilling its purpose to work together with customers and communities to meet their energy needs. TXNM's core values of Safety, Caring, and Integrity are the foundation for the Company's business objectives focused on safety excellence and customer satisfaction, including reliability. To reach these objectives, the Company is committed to:

- Preparing our workforce with the knowledge and skills to thrive in a customer-focused world
- Purposefully delivering an intentional customer experience that exceeds our evolving customer and stakeholder expectations
- Enabling an environmentally sustainable future and deploying technologically advanced solutions that empower and benefit customers
- Demonstrating the relationship between customer excellence and our dedicated focus on financial strength

Table of Contents

Meeting the business objectives above will drive key financial results, including:

- Earning authorized returns on regulated businesses
- Delivering at or above industry-average long-term earnings growth, with a dividend payout ratio between 50 and 60 percent of earnings
- Maintaining investment grade credit ratings

***Business Focus***

To achieve its business objectives, focus is directed in key areas: Safe, Reliable, and Affordable Power; Utility Plant Investments; Superior Customer Experience; Environmentally Responsible Power; and Stakeholder and Community Engagement. The Company works closely with its stakeholders to ensure that resource plans and infrastructure investments benefit from robust public dialogue and balance the diverse needs of our communities. Equally important is the focus of TXNM's utilities on customer satisfaction and community engagement.

*Safe, Reliable, and Affordable Power*

Safety is the first priority of our business and a core value of the Company. TXNM utilizes a Safety Management System to provide clear direction, objectives and targets for managing safety performance and minimizing risks and empowers employees to "Be the Reason Everyone Goes Home Safe."

TXNM measures reliability and benchmark performance of PNM and TNMP against other utilities using industry-standard metrics, including System Average Interruption Duration Index ("SAIDI") and System Average Interruption Frequency Index ("SAIFI"). PNM's and TNMP's investment plans include projects designed to support reliability and reduce the amount of time customers are without power.

TXNM and its utilities are aware of the important roles they play in enhancing economic vitality in their service territories. Management believes that maintaining strong and modern electric infrastructure is critical to ensuring reliability and supporting economic growth. When contemplating expanding or relocating their operations, businesses consider energy affordability and reliability to be important factors. PNM and TNMP strive to balance service affordability with infrastructure investment to maintain a high level of electric reliability and to deliver a safe and superior customer experience. Investing in PNM's and TNMP's infrastructure is critical to ensuring reliability and meeting future energy needs. Both utilities have long-established records of providing customers with safe and reliable electric service.

PNM participates in the EIM, a real-time wholesale energy trading market operated by the CAISO, that enables participating electric utilities to buy and sell energy. The EIM aggregates the variability of electricity generation and load for multiple balancing authority areas and utility jurisdictions. In addition, the EIM facilitates greater integration of renewable resources through the aggregation of flexible resources by capturing diversity benefits from the expanding geographic footprint and the expanded potential uses for those resources. PNM passes the cost savings achieved by participating in the EIM through to customers under PNM's FPPAC. PNM also plans to join the EDAM, which is a voluntary day-ahead regional market that expands on CAISO's EIM market, as early as 2027.

PNM joined the WRAP in April 2023 to bolster PNM's preparations for times of critical need. WRAP is a first-of-its-kind program in the West that adds a region-wide coordination between power providers for assessing and addressing resource adequacy. This step helps ensure regional resource availability is visible and coordinated in the event PNM customers are critically impacted by a resource emergency. WRAP is currently in the non-binding phases of the program, which is expected to continue through the summer of 2027.

*Utility Plant Investments*

During the 2023 and 2024 periods, PNM and TNMP together invested $2.3 billion in utility plant, including transmission and distribution systems, substations, power plants, and nuclear fuel. Investment plans emphasize new investments in transmission and distribution infrastructure to support growing demand with grid reliability and resilience and to deliver clean energy. The Company has been improving the diversification of its rate base among regulatory jurisdictions, moving TNMP and FERC transmission rate base to over half of the consolidated rate base.

Investments at TNMP support the continued high growth across each region of its service territory. Economic growth across Texas continues to push the demands on TNMP's system to new levels, including a new system peak in February 2025. Additionally, the Texas legislature in 2023 passed a series of bills aimed at encouraging investments to enhance grid reliability and resilience. The PUCT has developed, and continues to develop, rules associated with the new legislation. TNMP will continue to submit filings for investments and recovery in accordance with these new rules in addition to the existing rate recovery mechanisms.

Table of Contents

Investments at PNM are aimed at advancing the infrastructure beyond its original architecture to a more flexible and redundant system accommodating growing amounts of intermittent and distributed generation resources and integrating evolving technologies that provide long-term customer value. New Mexico's clean energy future depends on a reliable, resilient, secure grid to deliver an evolving mix of energy resources to customers. In addition, projects included in the Grid Modernization Plan will improve customers' ability to customize their use of energy and modernize PNM's electric grid through infrastructure and technology improvements.

At PNM, an increase in transmission investments also supports growing transmission demands across the system and are recovered through an annual FERC formula rate mechanism based on a usage-based system allocation.

See the subheading Capital Requirements included in the full discussion of Liquidity and Capital Resources below for additional discussion of the Company's projected capital requirements.

*Superior Customer Experience*

The Company strives to deliver a superior customer experience. With reliability being the primary role of a transmission and distribution service provider in Texas' deregulated market, TNMP continues to focus on keeping end-users updated about interruptions and to encourage consumer preparation when severe weather is forecasted. In 2024, TNMP made significant strides in improving customer satisfaction related to power outages by providing a more user-friendly experience on TNMP's outage map information system, making it easier for customers to access real-time outage information. In addition, TNMP introduced a new system that allows customers to receive outage alerts through multiple communication channels to enhance transparency and to ensure customers stay informed during outages. In September 2024, TNMP sent employees to assist in restoring power to those communities impacted by Hurricane Helene and in January 2025 TNMP was announced as an Edison Electric Institute ("EEI") Emergency Response Award recipient. The EEI Emergency Response Awards recognize recovery and assistance efforts of electric companies following service disruptions caused by extreme weather or other natural events.

Throughout 2024 and into 2025, PNM continues to hold in-person engagements with residential and business customers through customer advisory councils. These engagements have helped PNM to build and improve customer relationships and have provided PNM with valuable customer insights to gauge customer interest levels towards programs and services to be highly customer centric. Additionally, PNM continues to focus its efforts to enhance the customer experience through customer service improvements, including enhanced digital payment options, strategic customer outreach, and improved communications. In 2025, PNM introduced a redesigned customer bill to make it easier for customers to understand their bill as a part of a broader commitment improving transparency and usability. While the electric utility industry continues to experience declines in customer satisfaction, as measured by J.D. Power, PNM's ranking in 2025 remains stable, reflecting the Company's sustained efforts to improve the customer journey through a more seamless and customer-friendly experience. PNM continues to focus on addressing energy affordability by promoting participation in utility programs among households with high energy burden to offset high bills. PNM has implemented efforts to increase participation in low-income energy efficiency programs, providing additional aid through the PNM Good Neighbor Fund, partnering with state agencies to make it easier to access funding, improving access to clean energy through expanded outreach and communication, and the implementation of low income transportation electrification programs. As a result of these communication efforts, 1,864 families in need have received emergency assistance through the PNM Good Neighbor Fund in the three months ended March 31, 2025.

*Environmentally Responsible Power*

TXNM has a long-standing record of environmental stewardship. PNM's environmental focus is in three key areas:

- Developing strategies to provide reliable and affordable power while transitioning to a 100% carbon-free generating portfolio by 2040
- Preparing PNM's system to meet New Mexico's increasing renewable energy requirements as cost-effectively as possible
- Increasing energy efficiency participation

TXNM's corporate website (www.txnmenergy.com) includes a dedicated section providing key environmental and other information related to PNM's and TNMP's operations, including information that collectively demonstrates the Company's commitment to sustainability. This information highlights plans for PNM to be coal-free no later than 2031 and to achieve a carbon-free generating portfolio by 2040.

PNM has a Chief Sustainability Officer responsible for developing and implementing the Company's business strategy and positions on environmental and sustainability policy issues and is charged with establishing organization-wide policies, strategies, goals, objectives, and programs that advance sustainability and ensure compliance with regulations. The role serves as the Company's primary contact with various regulatory agencies and stakeholder groups on environmental matters. In

Table of Contents

addition, the role leads environmental justice work that considers environmental and social impacts of PNM programs and projects on affected communities.

PNM's Grid Modernization Plan is a major step forward to providing reliable, affordable and sustainable energy. As part of that plan, PNM will promote energy equity where technology like smart meters and distribution upgrades will be provided to low-income areas first in order to allow customers to gain insights into their energy usage in order to improve affordability and create fairer access to energy. In addition, PNM's Time-of-Day pilot approved in the 2024 Rate Change final order incentivizes customers, through price signals, to use energy during the day when renewable generation is abundant.

The Inflation Reduction Act of 2022 (the "IRA") provides benefits for TXNM and its customers by extending and enhancing clean energy incentives such as the investment tax credit and production tax credit. As the Company continues its transition away from carbon emitting sources, these credits reduce the cost of renewable investments. In addition, the IRA includes a new production tax credit for existing nuclear facilities that may create an added benefit for PNM's ownership in the carbon-free PVNGS. Other IRA provisions encourage transportation electrification with new electric vehicle credits and added incentives for vehicle charging infrastructure.

*Electric Vehicles*

TXNM is building upon its goal of 100% carbon-free generation by 2040 with plans for additional emissions reductions through the electrification of its vehicle fleet. Growing the number of electric vehicles within the Company's fleet will benefit the environment and lower fuel costs furthering the commitment to sustainability. Under the commitment, existing fleet vehicles will be replaced as they are retired with an increasing percentage of electric vehicles. The goals call for 25% of all light duty fleet purchases to be electric by 2025 and 50% to be electric by 2030.

To demonstrate TXNM's commitment to increase the electrification of vehicles in its service territory, PNM implemented its first TEP in 2022 and received approval of its 2024-2026 TEP in 2024. PNM has launched new transportation electrification offerings that support customer adoption of electric vehicles by addressing barriers to adoption. PNM's TEP program budget provides financial support to residential and non-residential customers towards the purchase of EV chargers and/or site make-ready costs, as well as customer education and outreach on EV-specific electricity rates to encourage charging during off-peak periods. More than 25% of the program budget is dedicated to low- and moderate-income customers to plan for an equitable transition to an electrified transportation sector.

PNM participates in the National Electric Highway Coalition, which plans to build fast-charging ports along major U.S. travel corridors. The coalition, with approximately 50 investor-owned electric companies, is committed to providing EV fast charging ports that will allow the public to drive EVs with confidence throughout the country's major roadways. To support this initiative, PNM's TEP program includes the installation of a charging network along major roadways in New Mexico.

*Renewable Energy and Energy Storage*

PNM's utility-owned solar and energy storage capacity, as well as solar, energy storage, wind, and geothermal procurements in service as of March 31, 2025, have a total net generation capacity of 2,779 MW. In addition to PNM's owned and third-party contracted solar facilities, PNM also has a customer distributed solar generation program that represented 314.9 MW at March 31, 2025. The NMPRC has approved plans for PNM to procure energy and RECs from additional resources to serve retail customers and a data center located in PNM's service territory. PNM's approved resource plans have a generation capacity of 910 MW and are expected to be in service beginning in the summer of 2026. This includes approximately 310 MW of capacity under the Community Solar Act which will allow PNM to provide customers the option of accessing solar energy. In addition, PNM has filed its 2028 Resource Application with the NMPRC seeking approval of resources to be available for the 2028 summer peak, which are necessary for PNM to meet forecasted peak load requirements to serve its customers and to continue progress towards a carbon-free generating portfolio.

PNM will continue to procure renewable resources while balancing the impact to customers' electricity costs in order to meet New Mexico's escalating RPS and carbon-free resource requirements.

*Energy Efficiency*

Energy efficiency plays a significant role in helping to keep customers' electricity costs low while meeting their energy needs and is one of the Company's approaches to supporting environmentally responsible power. PNM's and TNMP's energy efficiency and load management portfolios continue to achieve robust results. In 2024, incremental energy saved as a result of new participation in PNM's portfolio of energy efficiency programs is estimated to be 86 GWh. This is equivalent to the annual consumption of approximately 11,891 homes in PNM's service territory. PNM's load management and annual energy efficiency programs also help lower peak demand requirements. In 2024, TNMP's incremental energy saved as a result of new participation in TNMP's energy efficiency programs is estimated to be approximately 16 GWh. This is equivalent to the annual consumption of approximately 2,211 homes' electricity use in TNMP's service territory using a national average avoided emissions rate. TNMP's high-performance homes residential new construction energy efficiency program has earned the

Table of Contents

Energy Star Partner of the Year award for 8 years, including 6 years receiving the Sustained Excellence Award, recognizing long-term commitment to fighting climate change and protecting public health through energy efficiency.

*Water Conservation and Solid Waste Reduction*

PNM continues its efforts to reduce the amount of fresh water used to make electricity (about 45% more efficient than in 2005). Continued growth in PNM's fleet of solar and wind energy sources, energy efficiency programs, and innovative uses of air-cooling technology have contributed to this reduction. Water usage has continued to decline as PNM has substituted less fresh-water-intensive generation resources to replace SJGS. As the Company moves forward with its mission to achieve 100% carbon-free generation by 2040, it expects that more significant water savings will be gained. Shutting down SJGS in 2022 and Four Corners in 2031 will allow the Company to reach our goals for reduced freshwater use at 80% by 2035 and 90% by 2040 from 2005 levels. Focusing on responsible stewardship of New Mexico's scarce water resources improves PNM's water-resilience in the face of persistent drought and ever-increasing demands for water to spur the growth of New Mexico's economy.

In addition to the above areas of focus, the Company is working to reduce the amount of solid waste going to landfills through increased recycling and reduction of waste. In 2024, 21 of the Company's 22 facilities met or exceeded the solid waste diversion goal of a 65% diversion rate. The Company expects to continue to do well in this area in the future.

*Stakeholder and Community Engagement*

The Company is committed to fostering relationships with its customers, stakeholders, and communities. Through outreach, collaboration, and various community-oriented programs, the Company has demonstrated a commitment to building productive relationships with stakeholders, including customers, community partners, regulators, intervenors, legislators, and shareholders. Local relationships and one-on-one communications remain two of the most valuable ways both PNM and TNMP connect with their stakeholders. Both companies maintain long-standing relationships with governmental representatives and key electricity consumers to ensure that these stakeholders are updated on Company investments and initiatives. Key electricity consumers also have dedicated Company contacts that support their important service needs.

The Company utilizes a number of communications channels and strategic content to serve and engage its many stakeholders. PNM's website provides the details of major regulatory filings, including general rate requests, as well as the background on PNM's efforts to maintain reliability, keep prices affordable, and protect the environment. TNMP's website provides information on customized energy efficiency programs and TNMP rates, in addition to other community outreach information. The Company's website is also a resource for information about PNM's operations and community outreach efforts, including plans for building a sustainable energy future for New Mexico and to transition to a carbon-free generating portfolio by 2040. PNM also leverages social media in communications with customers on various topics such as education, outage alerts, safety, customer service, and PNM's community partnerships in philanthropic projects. As discussed above, TXNM's corporate website includes a dedicated section providing additional information regarding the Company's commitment to sustainability.

TXNM has a long tradition of supporting the communities that it serves in New Mexico and Texas and is committed to fostering positive relationships with stakeholders. During the three years ended December 31, 2024, corporate giving contributed $9.0 million to tribal communities and civic, educational, environmental, low income, and economic development organizations. Additionally, the PNM Resources Foundation (the "Foundation") has provided an annual average of $1.3 million in grant funding over the past three years across New Mexico and Texas. Throughout 2024, the Foundation has focused on grants for nontraditional pathways to education and grants for the environment. These grants help nonprofits innovate or sustain programs to grow and develop their mission, develop and implement environmental programs, and provide educational opportunities. The Foundation continues to expand its matching and volunteer grant programs and the annual amount of matching donations available to each of its employees. The Foundation has also approved an increase to the amount awarded to employees, through the employee crisis management fund, who have been affected by the wildfires, floods, and hurricanes. In response to the South Fork and Salt wildfires that have caused devastation in the Ruidoso and Mescalero Apache Tribe communities, PNM and the Foundation have donated to the Ruidoso Fire Emergency Action Fund, hosted by the Community Foundation of Southern New Mexico, and to the Mescalero Apache Tribe Tribal Relief Fund. PNM is also collaborating with community foundations to help support the effort and direct funds where they are most needed. To support our team members impacted by Hurricane Beryl, the Foundation has increased the employee crisis fund, which is available to help our employees with financial support for catastrophic emergencies and basic living needs during times of crises.

TXNM recognizes its responsibility to support programs and organizations that enrich the quality of life across its service territories and seeks opportunities to further demonstrate its commitment in these areas as needs arise. In response to community needs, TXNM partners with other corporate funders to support nonprofits and small businesses. TXNM also collaborates on community projects, low-income customer assistance programs, and employee volunteerism.

Table of Contents

PNM stands out as one of the few investor-owned utilities dedicated to operating a tribal relations office, which is focused on serving and collaborating with 18 of the 23 sovereign nations in New Mexico and the Southwest. PNM created the Navajo Nation Workforce Training Scholarship Program to provide support for Navajo tribal members and to encourage the pursuit of education and training in existing and emerging jobs in the communities in which they live. PNM has invested in paid summer college engineering internship programs for American Indian students available in the greater Albuquerque area, established the PNM Pueblo Education Scholarship and Endowment to invest in higher education for Native American Indian students, and supported the development of an entrepreneur complex located in Albuquerque and operated by the Indian Pueblo Cultural Center. PNM continues to partner with the Navajo Nation in the Light up Navajo project, piloted in 2019 and modeled as a mutual aid project to connect Navajo homes without electricity to the power grid. PNM is one of 44 utilities across 16 states to participate in improving the quality of life for families by bringing electricity to over 700 homes since inception of the project. PNM has also partnered with New Mexico universities to enhance intern programs and developed a business coalition model to drive economic development through intern partnerships. PNM continues to partner with key nonprofit organizations to initiate funding and action for programs focused on diversity, equity and inclusion.

Employee volunteers are the lifeblood of a healthy corporate culture. Community giving through volunteers' time and effort is at the heart of employee engagement. Throughout 2024, the Company held large-scale volunteer events, working alongside nonprofits, schools, and vulnerable communities throughout New Mexico and Texas. More than 600 employees in both states participated in the annual "Day of Service," a workday event encouraging employee volunteerism and serving more than 50 organizations. Throughout the year, employees volunteer their time generously through independent volunteer activities and board participation. Employees strengthen community resilience by giving more than 6,000 volunteer hours each year to support the health, safety, and well-being of diverse communities.

***Financial Focus***

*Earning Authorized Returns on Regulated Businesses*

TXNM's success in accomplishing its financial objectives is highly dependent on two key factors: fair and timely regulatory treatment for its utilities and the utilities' strong operating performance. The Company has multiple strategies to achieve favorable regulatory treatment, all of which have as their foundation a focus on the basics: safety, operational excellence, and customer satisfaction, while engaging stakeholders to build productive relationships. Both PNM and TNMP seek cost recovery for their investments through general rate cases, periodic cost of service filings, and various rate riders. The rates PNM and TNMP charge customers are subject to traditional rate regulation by the NMPRC, FERC, and the PUCT. Additional information about rate filings is provided in Note 17 of the Notes to Consolidated Financial Statements in the 2024 Annual Reports on Form 10-K.

Fair and timely rate treatment from regulators is crucial to PNM and TNMP in earning their allowed returns and critical for TXNM to achieve its financial objectives. TXNM believes that earning allowed returns is viewed positively by credit rating agencies and that improvements in the Company's ratings could lower costs to utility customers.

*State Regulation and Legislation*

TNMP

In the 2023 Texas Legislative session several bills were passed to support utility reliability and resiliency by encouraging and protecting utility infrastructure investments. Amongst the bills passed was DCRF legislation that adds a second filing per year and shortens the regulatory timeframe for the proceedings. Other bills include system resiliency and temporary mobile generation, which provide opportunities for added investment in TNMP's service territory and reduce uncertainty around rate recovery. Another bill directs ERCOT to develop reliability plans for the Permian Basin which could result in the need for additional investments in the West Texas service territory. Additionally, the Damaging Critical Infrastructure Bill helps protect TNMP's investments in response to criminal offenses damaging critical infrastructure facilities. These pieces of legislation demonstrate that Texas continues to encourage utility investment and prioritizes timely rate recovery. TNMP will look to prioritize investments aligned with these measures that improve the quality of service for current and future customers.

The regulatory framework in Texas strongly encourages investments into the grid by providing timely recovery through rate mechanisms outside of general rate cases. The PUCT has approved mechanisms that allow TNMP to recover capital invested in transmission and distribution projects without having to file a general rate case. The PUCT also approved rate riders that allow TNMP to recover amounts related to energy efficiency and third-party transmission costs. TNMP also has approximately 279,000 advanced meters across its service territory, the costs of which are being recovered through base rates.

Table of Contents

PNM

The 2025 New Mexico Legislative session included several bills that were passed to support economic development, clean energy, grid modernization, and wildfire preparedness. Amongst the bills passed were the Strategic Economic Development Site Readiness Bill (the "Site Readiness Bill") and the New Mexico Finance Authority Definitions, Funds & Rates Bill (the "Power Readiness Bill").

The Site Readiness Bill creates a dedicated funding mechanism and a structured process for identifying, assessing, and preparing strategic economic development sites across the state, positioning New Mexico to compete with other states actively investing in site readiness. It appropriates approximately $24 million for the site readiness fund for site-characterization studies of proposed economic development sites and site preparations of strategic economic development sites. The Site Readiness Bill also creates the Strategic Economic Development Site Advisory Committee to advise the New Mexico Development Department ("NMEDD") in selecting sites and awarding funding.

The Power Readiness Bill reduces risk, lead times, and regulatory uncertainty in acquiring additional generation resources and in building large-scale infrastructure needed to competitively serve economic development customers that create jobs and grow a public utility's rate base. It allows a public utility to annually increase generation capacity by up to 10% of the public utility's total system peak load. The Power Readiness Bill also shortens the time for regulatory approval of CCN filings for new, major infrastructure and allows a public utility to defer costs of economic development projects, placing them into a regulatory asset until a customer signs a contract or begins taking service.

*The Energy Transition Act ("ETA")*

The ETA requires utilities operating in New Mexico to have renewable portfolios equal to 40% by 2025, 50% by 2030, 80% by 2040, and 100% zero-carbon energy by 2045. The ETA also allows for the recovery of undepreciated investments and decommissioning costs related to qualifying EGUs that the NMPRC has required be removed from retail jurisdictional rates, provided replacement resources to be included in retail rates have lower or zero-carbon emissions. The ETA provides for a transition from fossil-fueled generating resources to renewable and other carbon-free resources by allowing utilities to issue securitized bonds related to the retirement of certain coal-fired generating facilities to qualified investors. ETBC I issued the ETBC I Securitized Bonds in November 2023 under the provisions of the ETA.

*Grid Modernization Plan*

In October 2024, the NMPRC approved PNM's Grid Modernization Plan which will improve customers' ability to customize their use of energy and ensure that customers, including low-income customers, are a top priority and will benefit from the electricity grid consistent with the Grid Modernization Statute. PNM's plan to modernize its electricity grid through infrastructure and technology improvements also increases the efficiency, reliability, resilience, and security of PNM's electric system. The approved plan includes grid modernization investments of approximately $344 million for the first six years of a broader 11-year strategy. The approved rate rider will recover capital costs, operating expenses, and taxes associated with the investments included in the plan.

*Integrated Resource Plan*

NMPRC rules require that investor-owned utilities file an IRP every three years. The IRP is required to cover a 20-year planning period and contain an action plan covering the first three years of that period. PNM's approved 2023 IRP maintains a continued focus on a carbon-free energy system by 2040. The plan highlights the need for the significant sustained addition of resources over the next two decades, replacing retiring or expiring capacity, meeting concurrent load growth, while reducing the carbon intensity of PNM's portfolio.

In December 2024, PNM issued its 2029-2032 RFP for at least 900 MW of new energy resources to come online between 2029 and 2032, with at least 500 MW needed by 2030 and is anticipated to identify potential replacement resources for PNM's current natural gas generation capacity as well as PNM's ownership interest in Four Corners.

*2028 Resource Application*

On November 22, 2024, PNM filed an application with the NMPRC seeking approval of two 150 MW ESAs, a 167 MW PPA for the Valencia power plant, and a CCN for a 100 MW solar facility and a 30 MW battery, with a proposed additional 20 MW option, to be available to meet summer 2028 customer needs. On March 12, 2025, PNM and intervening parties filed an unopposed comprehensive stipulation with the NMPRC which supports approval of PNM's application, including the proposed option to increase the 30 MW battery by an additional 20 MW. A hearing was held and on May 6, 2025, the hearing examiners issued a certification of stipulation recommending approval of the unopposed stipulation.

Table of Contents

*PNM Rate Riders and other*

The NMPRC has approved PNM recovering fuel costs through the FPPAC, as well as rate riders for renewable energy, energy efficiency, and the TEP. These mechanisms allow for more timely recovery of investments.

*FERC Regulation*

Rates PNM charges wholesale transmission customers are subject to traditional rate regulation by FERC. Rates charged to wholesale electric transmission customers, other than customers on the Western Spirit Line, are based on a formula rate mechanism pursuant to which rates for wholesale transmission service are calculated annually in accordance with an approved formula. The formula includes updating cost of service components, including investment in plant and operating expenses, based on information contained in PNM's annual financial report filed with FERC, as well as including projected transmission capital projects to be placed into service in the following year. The projections included are subject to true-up. Certain items, including changes to return on equity and depreciation rates, require a separate filing to be made with FERC before being included in the formula rate.

*Delivering At or Above Industry-Average Long-Term Earnings Growth*

TXNM's financial objective to deliver at or above industry-average long-term earnings growth enables investors to realize the value of their investment in the Company's business. Earnings growth is based on ongoing earnings, which is a non-GAAP financial measure that excludes from GAAP earnings certain non-recurring, infrequent, and other items that are not indicative of fundamental changes in the earnings capacity of the Company's operations. TXNM uses ongoing earnings to evaluate the operations of the Company and to establish goals, including those used for certain aspects of incentive compensation, for management and employees.

TXNM targets a dividend payout ratio in the 50% to 60% range of its ongoing earnings. The Board will continue to evaluate the dividend on an annual basis, considering sustainability and growth, capital planning, and industry standards.

The Board approved the following increases in the indicated annual common stock dividend:

| Approval Date | Percent Increase |
|---|---|
| December 2023 | 5.4% |
| December 2024 | 5.2% |

*Maintaining Investment Grade Credit Ratings*

The Company is committed to maintaining investment grade issuer credit ratings in order to reduce the cost of debt financing and to help ensure access to credit markets, when required. On January 15, 2024, S&P revised TXNM, PNM, and TNMP's outlook to stable from positive. See the subheading Liquidity included in the full discussion of Liquidity and Capital Resources below for the specific credit ratings for TXNM, PNM, and TNMP. All of the credit ratings issued by both Moody's and S&P on the Company's senior debt continue to be investment grade.

**Economic Factors**

*TNMP* – In the three months ended March 31, 2025, TNMP experienced an increase in volumetric weather normalized retail load of 1.0% compared to 2024. Weather normalized demand-based load, excluding retail transmission and data center consumers, increased 2.2% in the three months ended March 31, 2025 compared to 2024. Data center load, including distribution and transmission, has increased 105.6% in the three months ended March 31, 2025 compared to 2024.

*PNM* – In the three months ended March 31, 2025, PNM experienced an increase of 1.0% in weather normalized residential load. Weather normalized commercial load experienced an increase of 1.6% in the three months ended March 31, 2025 compared to 2024. In addition, PNM experienced an increase in industrial load of 20.5% in the three months ended March 31, 2025 compared to 2024.

The Company is closely monitoring the impacts on the capital markets of other macroeconomic conditions, including actions by the Federal Reserve to address inflationary concerns or other market conditions, and geopolitical activity, including the potential impacts of tariffs. The Company has not experienced, nor does it expect significant negative impacts to customer usage at PNM and TNMP resulting from these economic impacts. However, if current economic conditions worsen, the Company may be required to implement additional measures such as reducing or delaying operating and maintenance expenses and planned capital expenditures.

Table of Contents

**Results of Operations**

Net earnings attributable to TXNM were $8.9 million, or $0.10 per diluted share, in the three months ended March 31, 2025 compared to $47.2 million, or $0.52 per diluted share, in 2024. Among other things, earnings in the three months ended March 31, 2025 benefited from higher transmission and distribution rates at TNMP, higher demand-based load at TNMP, colder weather at TNMP, and higher weather normalized retail load at PNM. These increases were more than offset by decreased performance on PNM's NDT, coal mine reclamation, and SJGS decommissioning investment securities, higher operating expenses at PNM and TNMP, increased depreciation at PNM and TNMP due to increased plant in service, lower transmission margin at PNM, capacity arrangements at PNM, milder weather at PNM, and higher interest charges at PNM, TNMP, and Corporate and Other. Additional information on factors impacting results of operations for each segment is discussed below under Results of Operations.

**Liquidity and Capital Resources**

As of March 31, 2025, TXNM, PNM, and TNMP had revolving credit facilities with capacities of $300.0 million, $440.0 million, and $200.0 million. Total availability for TXNM on a consolidated basis was $585.5 million at April 25, 2025. The Company utilizes these credit facilities and cash flows from operations to provide funds for both construction and operational expenditures. TXNM also has intercompany loan agreements with each of its subsidiaries.

TXNM projects that its consolidated capital requirements, consisting of construction expenditures and dividends, will total $8.6 billion for 2025 - 2029, including amounts expended through March 31, 2025. These construction expenditures include TNMP's investments to support continued high growth in system demand across TNMP's service territories and growing encouragement for infrastructure investments from the Texas legislature to support grid reliability and resilience. PNM's capital initiatives include investments in transmission and distribution infrastructure to deliver clean energy, enhance customer satisfaction, and increase grid resilience. Construction expenditures also include investments proposed in PNM's Grid Modernization Plan and TNMP's SRP.

To fund capital spending requirements to meet growth that balances earnings goals, credit metrics, and liquidity needs, the Company has entered into a number of other financing arrangements. A complete listing of current financing arrangements is contained in Note 9 and Note 7 of the Notes to Consolidated Financial Statements in the 2024 Annual Reports on Form 10-K.

After considering the effects of these financings and the Company's short-term liquidity position as of April 25, 2025, the Company has consolidated maturities of long-term and short-term debt aggregating approximately $1.0 billion through April 2026. In addition to internal cash generation, the Company anticipates that it will be necessary to obtain additional long-term financing in the form of debt refinancing, new debt issuances, and/or new equity in order to fund its capital requirements during the 2025-2029 period. The Company currently believes that its internal cash generation, existing credit arrangements, and access to public and private capital markets will provide sufficient resources to meet the Company's capital requirements for at least the next twelve months. As of March 31, 2025 and April 25, 2025, the Company was in compliance with its debt covenants.

## RESULTS OF OPERATIONS

The following discussion and analysis should be read in conjunction with the Condensed Consolidated Financial Statements and Notes thereto. Trends and contingencies of a material nature are discussed to the extent known. Refer also to Disclosure Regarding Forward Looking Statements and to Part II, Item 1A. Risk Factors.

A summary of net earnings attributable to TXNM is as follows:

| | Three Months Ended March 31, | | |
|---|---|---|---|
| | 2025 | 2024 | Change |
| | (In millions, except per share amounts) | | |
| Net earnings attributable to TXNM | $ 8.9 | $ 47.2 | $ (38.3) |
| Average diluted common and common equivalent shares | 93.2 | 90.5 | 2.7 |
| Net earnings attributable to TXNM per diluted share | $ 0.10 | $ 0.52 | $ (0.42) |

Table of Contents

The components of the change in net earnings attributable to TXNM are:

| | Three Months Ended March 31, 2025 |
|---|---|
| | (In millions) |
| TNMP | $ 7.7 |
| PNM | (41.0) |
| Corporate and Other | (5.0) |
| Net change | $ (38.3) |

Information regarding the factors impacting TXNM's operating results by segment are set forth below.

**Segment Information**

The following discussion is based on the segment methodology that TXNM's management uses for making operating decisions and assessing performance of its various business activities. See Note 2 for more information on TXNM's operating segments.

**TNMP**

**Non-GAAP Financial Measures**

TNMP defines utility margin as electric operating revenues less cost of energy, which consists of costs charged by third-party transmission providers. TNMP believes that utility margin provides a more meaningful basis for evaluating operations than electric operating revenues since all third-party transmission costs are passed on to consumers through a transmission cost recovery factor. Utility margin is not a financial measure required to be presented and is considered a non-GAAP measure. TNMP does not intend for utility margin to represent any financial measure as defined by GAAP however, the calculation of utility margin, as presented, most closely compares to gross margin as defined by GAAP. Reconciliations between utility margin and gross margin are presented below.

| | Three Months Ended March 31, | | |
|---|---|---|---|
| | 2025 | 2024 | Change |
| | (In millions) | | |
| Gross margin | $ 66.3 | $ 55.1 | $ 11.2 |
| Transmission and distribution costs | 9.7 | 8.4 | 1.3 |
| Depreciation and amortization | 35.2 | 30.4 | 4.8 |
| Utility margin | $ 111.2 | $ 93.9 | $ 17.3 |

The following table summarizes the operating results for TNMP:

| | Three Months Ended March 31, | | |
|---|---|---|---|
| | 2025 | 2024 | Change |
| | (In millions) | | |
| Electric operating revenues | $ 149.4 | $ 128.8 | $ 20.6 |
| Cost of energy | 38.2 | 34.9 | 3.3 |
| Utility margin | 111.2 | 93.9 | 17.3 |
| Operating expenses | 33.2 | 32.8 | 0.4 |
| Depreciation and amortization | 35.2 | 30.4 | 4.8 |
| Operating income | 42.7 | 30.7 | 12.0 |
| Other income | 2.4 | 1.0 | 1.4 |
| Interest charges | (17.3) | (13.3) | (4.0) |
| Segment earnings before income taxes | 27.8 | 18.4 | 9.4 |
| Income (taxes) | (5.5) | (3.9) | (1.6) |
| Segment earnings | $ 22.3 | $ 14.6 | $ 7.7 |

Table of Contents

The following table shows total sales, including the impacts of weather, by retail tariff consumer class and average number of consumers:

| | Three Months Ended March 31, | | |
|---|---|---|---|
| | 2025 | 2024 | Percentage Change |
| Volumetric load [1] (GWh) | | | |
| Residential | 709.2 | 642.2 | 10.4 % |
| Commercial and other | 12.0 | 12.0 | — % |
| Total volumetric load | 721.2 | 654.2 | 10.2 % |
| Demand-based load [2] (MW) | 9,395.8 | 7,409.0 | 26.8 % |
| Average retail consumers (thousands) [3] | 280.3 | 275.1 | 1.9 % |

[1] Volumetric load consumers are billed on KWh usage.
[2] Demand-based load includes consumers billed on monthly KW peak and also includes retail transmission customers that are primarily billed under rate riders.
[3] TNMP provides transmission and distribution services to REPs that provide electric service to customers in TNMP's service territories. The number of consumers above represents the customers of these REPs. Under TECA, consumers in Texas have the ability to choose any REP to provide energy.

*Operating Results – Three Months Ended March 31, 2025, compared to 2024*

The following table summarizes the significant changes to gross margin:

| | Three Months Ended March 31, 2025 Change |
|---|---|
| *Gross margin:* | (In millions) |
| Utility margin (see below) | $ 17.3 |
| Depreciation and amortization (see below) | (4.8) |
| Higher vegetation management, outside services and employee related expenses, excluding administrative costs | (1.2) |
| Other | (0.1) |
| Net Change | $ 11.2 |

The following table summarizes the significant changes to utility margin:

| | Three Months Ended March 31, 2025 Change |
|---|---|
| *Utility margin:* | (In millions) |
| *Transmission rate relief/load* – Transmission cost of service rate increases in March 2024, September 2024 and March 2025 | $ 4.4 |
| *Distribution rate relief* – Distribution cost of service rate increase in July 2024 and November 2024 | 6.3 |
| *Volumetric-based consumer usage/load* – Weather normalized KWh sales increased 1.0% offset by lower average prices; the number of volumetric consumers increased 1.9% | (0.3) |
| *Demand-based consumer usage/load* – Weather normalized demand-based MW sales for large commercial and industrial consumers excluding retail transmission consumers increased 10.8% | 3.3 |
| *Weather* – Colder weather in 2025 | 2.4 |
| *Leap Year* – Decrease in revenue due to additional day in 2024 | (0.3) |
| Deferral of excess deferred income tax benefits refunded through base rates | 0.1 |
| *Rate Riders and other* – Impacts of rate riders, including transmission cost recovery factor and energy efficiency rider which are partially offset in operating expenses | 1.4 |
| Net Change | $ 17.3 |

Table of Contents

The following tables summarize the primary drivers for changes in operating expenses, depreciation and amortization, other income (deductions), interest charges, and income taxes:

| | Three Months Ended March 31, 2025 Change |
|---|---|
| *Operating expenses:* | (In millions) |
| Higher vegetation management expenses and outside services partially offset by lower employee related expenses | $ 0.6 |
| Higher capitalization of administrative and general expenses due to higher construction expenditures | (2.7) |
| Higher allocated depreciation and amortization expense from Corporate and Other | 0.3 |
| Higher property tax due to increased utility plant in service | 0.5 |
| Higher insurance premiums primarily related to wildfire risk | 1.5 |
| Other | 0.2 |
| Net Change | $ 0.4 |
| *Depreciation and amortization:* | |
| Increased utility plant in service | $ 4.8 |
| Net Change | $ 4.8 |
| *Other income (deductions):* | |
| Higher equity AFUDC | $ 0.3 |
| Higher CIAC | 1.0 |
| Other | 0.1 |
| Net Change | $ 1.4 |
| *Interest charges:* | |
| Issuance of first mortgage bonds in 2025 | $ (0.9) |
| Issuance of first mortgage bonds in 2024 | (4.1) |
| Repayment of first mortgage bonds in 2024 | 0.8 |
| Higher interest on revolving short-term borrowings | (0.7) |
| Higher debt AFUDC | 0.9 |
| Net Change | $ (4.0) |
| *Income (taxes) benefits:* | |
| Higher segment earnings before income taxes | $ (2.0) |
| Higher amortization of excess deferred income taxes | 0.1 |
| Other | 0.3 |
| Net Change | $ (1.6) |

**PNM**

**Non-GAAP Financial Measures**

PNM defines utility margin as electric operating revenues less cost of energy, which consists primarily of fuel and purchase power costs. PNM believes that utility margin provides a more meaningful basis for evaluating operations than electric operating revenues since substantially all fuel and purchase power costs are offset in revenues as those costs are passed through to customers under PNM's FPPAC. Utility margin is not a financial measure required to be presented and is considered a non-GAAP measure. PNM does not intend for utility margin to represent any financial measure as defined by GAAP however, the calculation of utility margin, as presented, most closely compares to gross margin as defined by GAAP.

Table of Contents

Reconciliations between utility margin and gross margin are presented below.

| | Three Months Ended March 31, | | |
|---|---|---|---|
| | 2025 | 2024 | Change |
| | (In millions) | | |
| Gross margin | $ 102.3 | $ 120.9 | $ (18.6) |
| Energy production costs | 24.5 | 22.2 | 2.3 |
| Transmission and distribution costs | 15.8 | 14.4 | 1.4 |
| Depreciation and amortization | 59.8 | 53.3 | 6.5 |
| Utility margin | $ 202.4 | $ 210.7 | $ (8.3) |

The following table summarizes the operating results for PNM:

| | Three Months Ended March 31, | | |
|---|---|---|---|
| | 2025 | 2024 | Change |
| | (In millions) | | |
| Electric operating revenues | $ 333.4 | $ 308.1 | $ 25.3 |
| Cost of energy | 131.0 | 97.4 | 33.6 |
| Utility margin | 202.4 | 210.7 | (8.3) |
| Operating expenses | 111.3 | 106.5 | 4.8 |
| Depreciation and amortization | 59.8 | 53.3 | 6.5 |
| Operating income | 31.3 | 51.0 | (19.7) |
| Other income (deductions) | 3.3 | 25.1 | (21.8) |
| Interest charges | (29.8) | (25.1) | (4.7) |
| Segment earnings before income taxes | 4.8 | 50.9 | (46.1) |
| Income (taxes) benefit | — | (5.8) | 5.8 |
| Valencia non-controlling interest | (3.7) | (3.0) | (0.7) |
| Preferred stock dividend requirements | (0.1) | (0.1) | — |
| Segment earnings | $ 0.9 | $ 41.9 | $ (41.0) |

The following table shows total GWh sales, including the impacts of weather, by customer class and average number of customers:

| | Three Months Ended March 31, | | |
|---|---|---|---|
| | 2025 | 2024 | Percentage Change |
| | (Gigawatt hours, except customers) | | |
| Residential | 772.7 | 776.5 | (0.5)% |
| Commercial | 853.0 | 848.0 | 0.6 |
| Industrial [1] | 584.6 | 484.9 | 20.6 |
| Public authority | 47.7 | 43.4 | 9.9 |
| Economy energy service [2] | 149.8 | 164.3 | (8.8) |
| Other sales for resale [3] | 897.0 | 754.2 | 18.9 |
| | 3,304.8 | 3,071.3 | 7.6 % |
| Average retail customers (thousands) | 555.4 | 551.1 | 0.8 % |

[1] Includes energy provided by PNM for renewable energy resources to match the energy and capacity requirements of Meta. PNM purchases renewable energy which is passed through to Meta under a rate rider. A special service rate is applied to Meta's energy consumption in those hours of the month when their consumption exceeds the energy production from the renewable resources.
[2] PNM purchases energy for a large customer on the customer's behalf and delivers the energy to the customer's location through PNM's transmission system. PNM charges the customer for the cost of the energy as a direct pass through to the customer with only a minor impact in utility margin resulting from providing ancillary services.
[3] Includes sales for resale activity resulting from PNM's participation in the EIM.

Table of Contents

*Operating Results – Three Months Ended March 31, 2025, compared to 2024*

The following table summarizes the significant changes to gross margin:

| | | Three Months Ended March 31, 2025 Change |
|---|---|---|
| *Gross margin:* | | (In millions) |
| Utility margin (see below) | | $ (8.3) |
| Depreciation and amortization (see below) | | (6.5) |
| | Lower plant maintenance and administrative costs primarily due Four Corners and gas fired plants and the disposition of PVNGS Unit 2 leaseed interests, partially offset by higher costs for the remaining interests of PVNGS. | |
| Higher plant maintenance costs at Four Corners and gas fired plants, partially offset by lower costs at PVNGS | | (1.7) |
| Higher employee related, outside services, and vegetation management expenses, excluding administrative costs | | (1.7) |
| Other | | (0.4) |
| Net Change | | $ (18.6) |

The following table summarizes the significant changes to utility margin:

| | Three Months Ended March 31, 2025 Change |
|---|---|
| *Utility margin:* | (In millions) |
| *Retail customer usage/load* – Weather normalized retail KWh sales increased 1.0% for residential customers, 1.6% for commercial customers and 20.5% for industrial customers | $ 4.3 |
| *Weather* – Milder weather in 2025 | (0.3) |
| *Leap Year* - Decrease in revenue due to additional day in 2024 | (1.9) |
| *Transmission* – Decrease in revenues primarily due to lower market prices and lower volumes in 2025 | (2.5) |
| *Capacity arrangements* – Additional energy storage agreements starting in the fourth quarter of 2024 partially offset with sales agreement in 2025 | (10.0) |
| *Rate riders and other* – Includes renewable energy, FPPAC, energy efficiency, energy transition charge, and transportation electrification riders which are partially offset in operating expenses, depreciation and amortization, other income (deductions), and interest charges | 2.1 |
| Net Change | $ (8.3) |

The following tables summarize the primary drivers for changes in operating expenses, depreciation and amortization, other income (deductions), interest charges, and income taxes:

| | Three Months Ended March 31, 2025 Change |
|---|---|
| *Operating expenses:* | (In millions) |
| Higher costs at Four Corners and gas fired plants partially offset with lower costs at PVNGS | $ 3.6 |
| Lower employee related expenses offset by higher vegetation management expenses and outside services | (0.2) |
| Unrecoverable portion of San Juan Coal Mine reclamation remeasurement related to the capped surface mine liability in 2024 | (4.5) |
| Higher insurance premiums primarily related to wildfire risk | 3.1 |
| Higher costs associated with rate riders included in utility margin | 2.6 |
| Other | 0.2 |
| Net Change | $ 4.8 |

Table of Contents

| | Three Months Ended March 31, 2025 Change |
|---|---|
| *Depreciation and amortization:* | (In millions) |
| Increased utility plant in service | $ 5.4 |
| Amortization related to ETBC I Securitized Costs, offset in utility margin | 0.9 |
| Other | 0.2 |
| Net Change | $ 6.5 |
| *Other income (deductions):* | |
| Decreased performance on investment securities in the NDT and coal mine reclamation trusts | $ (19.2) |
| Lower equity AFUDC | (2.1) |
| Other | (0.5) |
| Net Change | $ (21.8) |
| *Interest charges:* | |
| Higher interest on term loans | $ (4.7) |
| Higher interest on revolving short-term borrowings | (1.5) |
| Higher interest related to remarketed PCRBs in June 2024 | (0.9) |
| Lower interest on transmission interconnection and security deposit arrangements | 1.4 |
| Higher debt AFUDC | 0.9 |
| Other | 0.1 |
| Net Change | $ (4.7) |
| *Income (taxes) benefits:* | |
| Lower segment earnings before income taxes | $ 11.9 |
| Lower amortization of federal excess deferred income taxes | (5.1) |
| Other | (1.0) |
| Net Change | $ 5.8 |

**Corporate and Other**

The table below summarizes the operating results for Corporate and Other:

| | Three Months Ended March 31, | | |
|---|---|---|---|
| | 2025 | 2024 | Change |
| | (In millions) | | |
| Electric operating revenues | $ — | $ — | $ — |
| Cost of energy | — | — | — |
| Utility margin | — | — | — |
| Operating expenses | (7.3) | (8.4) | 1.1 |
| Depreciation and amortization | 9.5 | 9.5 | — |
| Operating (loss) | (2.2) | (1.1) | (1.1) |
| Other income (deductions) | (0.2) | (15.2) | 15.0 |
| Interest charges | (16.4) | (15.3) | (1.1) |
| Segment (loss) before income taxes | (18.8) | (31.6) | 12.8 |
| Income (taxes) benefit | 4.5 | 22.2 | (17.7) |
| Segment (loss) | $ (14.3) | $ (9.3) | $ (5.0) |

Corporate and Other operating expenses shown above are net of amounts allocated to PNM and TNMP under shared services agreements. The amounts allocated include certain expenses shown as depreciation and amortization and other income (deductions) in the table above. The change in operating expense for the three months ended March 31, 2025 includes increases of $1.5M for process improvement initiatives and decreases of $0.7 million in costs related to the Merger that were not

Table of Contents

allocated to PNM or TNMP. Substantially all depreciation and amortization expense is offset in operating expenses as a result of allocation of these costs to other business segments.

*Operating Results – Three Months Ended March 31, 2025 compared to 2024*

The following tables summarize the primary drivers for changes in other income (deductions), interest charges, and income taxes:

| | Three Months Ended March 31, 2025 Change |
|---|---|
| *Other income (deductions):* | (In millions) |
| Sale of NMRD equity method investment in 2024 | $ 15.1 |
| Other | (0.1) |
| Net Change | $ 15.0 |
| *Interest charges:* | |
| Issuance of $550.0 million Convertible Notes in June 2024 | $ (7.9) |
| Higher interest on short-term borrowings | (0.5) |
| Lower interest on term loans | 7.4 |
| Other | (0.1) |
| Net Change | $ (1.1) |
| *Income (taxes) benefits:* | |
| Lower segment loss before income taxes | $ (3.2) |
| Impact of difference in effective tax rates used by TXNM and its subsidiaries in the calculation of income taxes in interim periods | 1.1 |
| Investment tax credit related to the sale of NMRD in 2024 | (15.7) |
| Other | 0.1 |
| Net Change | $ (17.7) |

## LIQUIDITY AND CAPITAL RESOURCES

**Statements of Cash Flows**

The changes in TXNM's cash flows for the three months ended March 31, 2025, compared to March 31, 2024, are summarized as follows:

| | Three Months Ended March 31, | | |
|---|---|---|---|
| | 2025 | 2024 | Change |
| Net cash flows from (used in): | (In millions) | | |
| Operating activities | $ 141.3 | $ 92.8 | $ 48.5 |
| Investing activities | (345.0) | (184.4) | (160.6) |
| Financing activities | 197.6 | 99.5 | 98.1 |
| Net change in cash, cash equivalents, and restricted cash | $ (6.2) | $ 8.0 | $ (14.2) |

*Cash Flows from Operating Activities*

Changes in TXNM's cash flow from operating activities result from net earnings, adjusted for items impacting earnings that do not provide or use cash. See Results of Operations above. Certain changes in assets and liabilities resulting from normal operations, including the effects of the seasonal nature of the Company's operations, also impact operating cash flows.

Table of Contents

*Cash Flows from Investing Activities*

The changes in TXNM's cash flows used in investing activities relate primarily to changes in utility plant additions. Cash flows from investing activities include purchases and sales of investment securities in the NDT, SJGS decommissioning trust, and coal mine reclamation trusts as well as the sale of NMRD on February 27, 2024.

Major components of TXNM's cash inflows and (outflows) from investing activities are shown below:

| | Three Months Ended March 31, | | |
|---|---|---|---|
| | 2025 | 2024 | Change |
| **Cash (Outflows) for Utility Plant Additions** | (In millions) | | |
| PNM: | | | |
| Generation | $ (39.3) | $ (29.6) | $ (9.7) |
| Transmission and distribution | (99.5) | (121.2) | 21.7 |
| Nuclear fuel | (5.9) | (4.2) | (1.7) |
| | (144.7) | (155.0) | 10.3 |
| TNMP: | | | |
| Transmission | (90.6) | (34.6) | (56.0) |
| Distribution | (93.6) | (90.0) | (3.6) |
| | (184.2) | (124.6) | (59.6) |
| Corporate and Other: | | | |
| Computer hardware, software, general services, and other | (13.7) | (9.5) | (4.2) |
| | (342.6) | (289.1) | (53.5) |
| **Other Cash Flows from Investing Activities** | | | |
| Proceeds from sale of plant assets | $ — | $ 2.8 | $ (2.8) |
| Proceeds from sales of investment securities | 90.1 | 302.5 | (212.4) |
| Purchases of investment securities | (92.5) | (305.0) | 212.5 |
| Proceeds from sale of NMRD | — | 116.9 | (116.9) |
| Investments in NMRD | — | (12.6) | 12.6 |
| Other, net | — | 0.1 | (0.1) |
| | (2.4) | 104.7 | (107.1) |
| Net cash flows used in investing activities | $ (345.0) | $ (184.4) | $ (160.6) |

*Cash Flows from Financing Activities*

The changes in TXNM's cash flows from financing activities include:

- Short-term borrowings decreased $15.6 million in 2025 compared to a decrease of $17.4 million in 2024, resulting in a net increase in cash flows from financing activities of $1.8 million
- In 2025, TNMP issued $140.0 million aggregate principal amount of TNMP 2025 Bonds and used the proceeds to repay borrowings under the TNMP Revolving Credit Facility, to fund capital expenditures, and for other corporate purposes
- In 2025, PNM entered into the PNM 2025 Term Loan for $195.0 million and used the proceeds to repay borrowings under the PNM Revolving Credit Facility, the PNM New Mexico Credit Facility, and for other corporate purposes

**Financing Activities**

See Note 7 of the Notes to Consolidated Financial Statements in the 2024 Annual Reports on Form 10-K and Note 9 for additional information concerning the Company's financing activities. PNM must obtain NMPRC approval for any financing transaction having a maturity of more than 18 months. In addition, PNM files its annual informational financing filing and short-term financing plan with the NMPRC.

The Company's ability to access the credit and capital markets at a reasonable cost is largely dependent upon its:

- Ability to earn a fair return on equity
- Results of operations
- Ability to obtain required regulatory approvals
- Conditions in the financial markets
- Credit ratings

Table of Contents

The Company is closely monitoring the impacts on the capital markets of other macroeconomic conditions, including actions by the Federal Reserve to address inflationary concerns or other market conditions, and geopolitical activity, including the potential impacts of tariffs. The Company currently believes it has adequate liquidity but cannot predict the effects of any of these macroeconomic conditions on the global, national, or local economy, including the Company's ability to access capital in the financial markets, or on the Company's financial position, results of operations, and cash flows.

Each of the Company's revolving credit facilities and term loans contain a single financial covenant that requires the maintenance of a debt-to-capitalization ratio. For the TXNM agreements, this ratio must be maintained at less than or equal to 70%, and for the PNM and TNMP agreements, this ratio must be maintained at less than or equal to 65%. The Company's revolving credit facilities, term loans, and other debt agreements generally also contain customary covenants, events of default, cross-default provisions, and change-of-control provisions. The Company is in compliance with its debt covenants.

In January 2025, PNM entered the PNM 2025 Term Loan. PNM used the proceeds of the PNM 2025 Term Loan to repay borrowings under the PNM Revolving Credit Facility, the PNM New Mexico Credit Facility, and for general corporate purposes. The PNM 2025 Term Loan bears interest at a variable rate, which was 5.32% at March 31, 2025, and must be repaid on or before July 21, 2026.

In February 2025, TNMP entered into the TNMP 2025 Bond Purchase Agreement for the sale of $140.0 million aggregate principal amount of the TNMP 2025 Bonds. TNMP issued all $140.0 million at a 5.19% interest rate, due April 1, 2031. The proceeds were used to repay borrowings under the TNMP Revolving Credit Facility, for funding of capital expenditures, and for other corporate purposes.

In April 2025, PNM entered into the PNM 2025 Note Purchase Agreement with institutional investors for the sale and issuance of $300.0 million aggregate principal amount of the PNM 2025 SUNs, offered in private placement transactions. The PNM 2025 SUNs were issued on April 23, 2025 in two series. PNM issued $125.0 million of the PNM 2025 SUNs at 5.75%, due June 1, 2032, and another $175.0 million at 6.13%, due June 1, 2037. Proceeds from the PNM 2025 SUNs were used for the repayment of existing indebtedness, funding of capital expenditures, and general corporate purposes.

**Capital Requirements**

TXNM's total capital requirements consist of construction expenditures and cash dividend requirements for TXNM common stock and PNM preferred stock.

Key activities in TXNM's current construction program include:

- Investing in transmission and distribution infrastructure
- Upgrading generation resources and delivering clean energy
- Purchasing nuclear fuel

Projected capital requirements, including amounts expended through March 31, 2025, are:

| | 2025 | 2026-2029 | Total |
|---|---|---|---|
| | (In millions) | | |
| Construction expenditures | $ 1,321.3 | $ 6,513.0 | $ 7,834.3 |
| Dividends on TXNM common stock | 151.0 | 611.3 | 762.3 |
| Dividends on PNM preferred stock | 0.5 | 2.1 | 2.6 |
| Total capital requirements | $ 1,472.8 | $ 7,126.4 | $ 8,599.2 |

The construction expenditure estimates are under continuing review and subject to ongoing adjustment, as well as to Board review and approval. The construction expenditures above include TNMP's investments to support continued high growth in system demand across TNMP's service territories and growing encouragement for infrastructure investments from the Texas legislature to support grid reliability and resilience. PNM's capital initiative that includes investments in transmission and distribution infrastructure to deliver clean energy, enhance customer satisfaction, and increase grid resilience. Construction expenditures also include investments in PNM's Grid Modernization Plan and TNMP's SRP. These investments provide for a more resilient, reliable, efficient, and decarbonized electric system. Not included in the table above are incremental expenditures for new customer growth in New Mexico and Texas, and other transmission and renewable energy expansion in New Mexico. The ability of TXNM to pay dividends on its common stock is dependent upon the ability of PNM and TNMP to pay dividends to TXNM. See Note 6 of the Notes to the Consolidated Financial Statements in the 2024 Annual Reports on Form 10-K for a discussion of regulatory and contractual restrictions on the payment of dividends by PNM and TNMP.

Table of Contents

During the three months ended March 31, 2025, TXNM met its capital requirements and construction expenditures through cash generated from operations, as well as its liquidity arrangements and the borrowings discussed in Financing Activities above.

In addition to the capital requirements for construction expenditures and dividends, the Company has long-term debt and term loans that must be paid or refinanced at maturity. PNM has $3.5 million and $3.6 million in scheduled principal payments due for the ETBC I Securitized Bonds in August 2025 and February 2026. PNM also has $104.0 million and $250.0 million of SUNs that are due in May and August of 2025 as well as the PNM 2024 $200.0 million Term Loan due in November 2025. TNMP has $60.0 million of 3.53% FMBs that are due in February 2026. TXNM has $51.0 million outstanding under the TXNM 2021 Delayed Draw Term Loan that matures in May 2025. See Note 9 for additional information about the Company's long-term debt and equity arrangements. The Company may also enter into new arrangements similar to the existing agreements, borrow under the revolving credit facilities, or issue new long-term debt or equity in the public or private capital markets, or a combination of these sources. The Company has from time to time refinanced or repurchased portions of its outstanding debt before scheduled maturity. Depending on market conditions, the Company may refinance other debt issuances or make additional debt repurchases in the future.

**Liquidity**

TXNM's liquidity arrangements include the $300.0 million TXNM Revolving Credit Facility, the $400.0 million PNM Revolving Credit Facility, and the $200.0 million TNMP Revolving Credit Facility. Each of these facilities matures on March 30, 2029 and contains two one-year extension options that, if exercised, would extend the maturity to March 2031, subject to approval by a majority of the lenders. PNM also has the $40.0 million PNM New Mexico Credit Facility with a maturity of May 20, 2026. Variable interest rates under the TXNM, PNM, and TNMP revolving credit facilities are based on SOFR. The Company believes the terms and conditions of these facilities are consistent with those of other investment grade revolving credit facilities in the utility industry. The Company expects that it will be able to extend or replace these credit facilities under similar terms and conditions prior to their expirations.

The revolving credit facilities and the PNM New Mexico Credit Facility provide short-term borrowing capacity. The revolving credit facilities also allow letters of credit to be issued. Letters of credit reduce the available capacity under the facilities. The Company utilizes these credit facilities and cash flows from operations to provide funds for both construction and operational expenditures. The Company's business is seasonal with more revenues and cash flows from operations being generated in the summer months. In general, the Company relies on the credit facilities to be the initial funding source for construction expenditures. Accordingly, borrowings under the facilities may increase over time. Depending on market and other conditions, the Company will periodically issue long-term debt and use the proceeds to reduce the borrowings under the credit facilities or refinance other debt. Information regarding the range of borrowings for each facility is as follows:

| Range of Borrowings | Three Months Ended March 31, 2025 | |
|---|---|---|
| | Low | High |
| | (In millions) | |
| PNM: | | |
| PNM Revolving Credit Facility | $ 170.0 | $ 325.2 |
| PNM New Mexico Credit Facility | 30.0 | 40.0 |
| TNMP Revolving Credit Facility | 110.2 | 200.0 |
| TXNM Revolving Credit Facility | 93.9 | 161.7 |

At March 31, 2025, the weighted average interest rates were 5.67% for the PNM Revolving Credit Facility, 5.67% for the PNM New Mexico Credit Facility, 5.30% for the TNMP Revolving Credit Facility, and 5.92% for the TXNM Revolving Credit Facility.

The Company currently believes that its capital requirements for at least the next twelve months can be met through internal cash generation, existing, extended, or new credit arrangements, and access to public and private capital markets as discussed above and in Note 9. The Company anticipates that additional long-term financing, in the form of debt and/or equity issuances, will be necessary to fund its capital requirements and to balance its capital structure during the 2025-2029 period. To cover the difference in the amounts and timing of internal cash generation and cash requirements, the Company intends to use short-term borrowings under its current and future liquidity arrangements or other short-term loans. Market conditions, such as rising interest rates, may raise the cost of borrowing under the Company's current and future liquidity arrangements or other variable debt. In addition, if market conditions worsen, the Company may not be able to access the capital markets or renew credit facilities when they expire. Should that occur, the Company would seek to improve cash flows by reducing capital expenditures and exploring other available alternatives.

Table of Contents

As of April 25, 2025, ratings on the Company's securities were as follows:

| | TXNM | PNM | TNMP |
|---|---|---|---|
| S&P | | | |
| Issuer rating | BBB | BBB | BBB+ |
| Senior secured debt | * | * | A |
| Senior unsecured debt | BBB- | BBB | * |
| Junior subordinated debt | BB+ | * | * |
| Preferred stock | * | BB+ | * |
| Moody's | | | |
| Issuer rating | Baa3 | Baa2 | Baa1 |
| Senior secured debt | * | * | A2 |
| Senior unsecured debt | Baa3 | Baa2 | * |
| Junior subordinated debt | Ba1 | * | * |
| * Not applicable | | | |

Investors are cautioned that a security rating is not a recommendation to buy, sell, or hold securities, that each rating is subject to revision or withdrawal at any time by the rating organization, and that each rating should be evaluated independently of any other rating.

A summary of liquidity arrangements as of April 25, 2025, is as follows:

| | PNM | TNMP | TXNM Separate | TXNM |
|---|---|---|---|---|
| | (In millions) | | | |
| Financing capacity: | | | | |
| Revolving Credit Facility | $ 400.0 | $ 200.0 | $ 300.0 | $ 900.0 |
| PNM New Mexico Credit Facility | 40.0 | — | — | 40.0 |
| Total financing capacity | 440.0 | 200.0 | 300.0 | 940.0 |
| Amounts outstanding as of April 25, 2025: | | | | |
| Revolving Credit Facility | 17.7 | 155.7 | 158.0 | 331.4 |
| PNM New Mexico Credit Facility | 20.0 | — | — | 20.0 |
| Letters of credit | — | — | 3.1 | 3.1 |
| Total short-term debt and letters of credit | 37.7 | 155.7 | 161.1 | 354.5 |
| Remaining availability as of April 25, 2025 | $ 402.3 | $ 44.3 | $ 138.9 | $ 585.5 |
| Invested cash as of April 25, 2025 | $ — | $ — | $ 0.9 | $ 0.9 |

In addition to the above, TXNM has $30.3 million of letters of credit issued under the WFB LOC Facility. See Note 9. The above table excludes intercompany debt. As of April 25, 2025, PNM had no borrowings and TNMP had $2.9 million in borrowings from TXNM under their respective intercompany loan agreements. TXNM had $1.6 million of intercompany borrowings from PNMR Development as of April 25, 2025. The remaining availability under the revolving credit facilities at any point in time varies based on a number of factors, including the timing of collections of accounts receivables and payments for construction and operating expenditures.

TXNM has an automatic shelf registration that provides for the issuance of various types of debt and equity securities that expires February 2028. PNM has a shelf registration statement for up to $650.0 million of SUNs that expires in May 2026.

**Other Material Cash Requirements**

TXNM, PNM, and TNMP have contractual obligations for long-term debt, minimum lease payments, coal contracts, coal mine reclamation, nuclear decommissioning, SJGS plant decommissioning, pension and retiree medical contributions, and certain other long-term obligations. See MD&A – Other Material Cash Requirements in the 2024 Annual Reports on Form 10-K.

Table of Contents

**Contingent Provisions of Certain Obligations**

As discussed in the 2024 Annual Reports on Form 10-K, TXNM, PNM, and TNMP have a number of debt obligations and other contractual commitments that contain contingent provisions. Some of these, if triggered, could affect the liquidity of the Company. In the unlikely event that the contingent requirements were to be triggered, TXNM, PNM, or TNMP could be required to provide security, immediately pay outstanding obligations, or be prevented from drawing on unused capacity under certain credit agreements. The contingent provisions also include contractual increases in the interest rate charged on certain of the Company's short-term debt obligations in the event of a downgrade in credit ratings. The Company believes its financing arrangements are sufficient to meet the requirements of the contingent provisions. No conditions have occurred that would result in any of the above contingent provisions being implemented.

**Capital Structure**

The capitalization tables below include the current maturities of long-term debt but does not include short-term debt or lease obligations as debt.

| | March 31, 2025 | December 31, 2024 |
|---|---|---|
| **TXNM** | | |
| TXNM common equity | 32.2 % | 33.9 % |
| Preferred stock of subsidiary | 0.2 | 0.2 |
| Long-term debt [1] | 67.6 | 65.9 |
| Total capitalization | 100.0 % | 100.0 % |
| **PNM** | | |
| PNM common equity | 44.6 % | 46.4 % |
| Preferred stock | 0.2 | 0.2 |
| Long-term debt | 55.2 | 53.4 |
| Total capitalization | 100.0 % | 100.0 % |
| **TNMP** | | |
| Common equity | 46.4 % | 48.3 % |
| Long-term debt | 53.6 | 51.7 |
| Total capitalization | 100.0 % | 100.0 % |

[1] TXNM's long-term debt as of March 31, 2025 includes Convertible Notes (Note 9), which receive 50% equity credit from ratings organizations.

## OTHER ISSUES FACING THE COMPANY

**Climate Change Issues**

*Background*

For the past several years, management has identified multiple risks and opportunities related to climate change, including the impacts of severe weather events, potential environmental regulation, technological innovation, and availability of fuel and water for operations, as among the most significant risks facing the Company. Accordingly, these risks are overseen by the Board in order to facilitate more integrated risk and strategy oversight and planning. Board oversight includes understanding the various challenges and opportunities presented by these risks, including the financial consequences that might result from enacted and potential federal and/or state regulation of GHG; plans to mitigate these risks; and the impacts these risks may have on the Company's strategy. In addition, the Board approves certain procurements of grid modernization technologies and replacement resources.

Management is also responsible for assessing significant risks, developing and executing appropriate responses, and reporting to the Board on the status of risk activities. For example, management periodically updates the Board on the implementation of corporate environmental policy, and the Company's environmental management systems, including the promotion of energy efficiency programs, and the use of renewable resources. The Board is also informed of the Company's practices and procedures to assess the impacts of operations on the environment. The Board considers issues associated with climate change, the Company's GHG exposures, and the financial consequences that might result from enacted and potential federal and/or state regulation of GHG. Management has published, with Board oversight, a Climate Change Report available at https://www.txnmenergy.com/sustainability/environment/climate_change_report that details the Company's efforts to transition to a carbon-free generating portfolio by 2040.

As part of management's continuing effort to monitor climate-related risks and assess opportunities, the Company has advanced its understanding of climate change by participating in the "2 Degree Scenario" planning by participating in the

Table of Contents

Electric Power Research Institute ("EPRI") Understanding Climate Scenarios & Goal Setting Activities program. The program focused on characterizing and analyzing the relationship of individual electric utility company's carbon emissions and global temperature goals. Activities included analyzing the scientific understanding of global emissions pathways that are consistent with limiting global warming and providing insight to assist companies in developing approaches to climate scenario planning. As PNM expands its sustainability efforts, EPRI's environmental and climate analysis programs have also been useful in gaining a better understanding of energy and environmental policy and regulations, advanced clean energy technologies, decarbonization trends and climate impacts. In 2022, PNM joined EPRI's Climate READi program which is a strategic initiative convening a global collaborative of electric utilities, thought leaders, scientific researchers and other key stakeholders to strengthen the power sector's collective approach to managing climate risk to the power system. The program is a three-year initiative, through work across three concurrent workstreams, and PNM will benefit from the development of a first-of-its-kind comprehensive framework for managing physical climate risk and investment prioritization that is scheduled to launch in May 2025.

The Company cannot anticipate or predict the potential long-term effects of climate change or climate change related regulation on its results of operations, financial position, or cash flows.

*Greenhouse Gas Emissions Exposures*

In 2024, GHG emissions associated with PNM's interests in its fossil-fueled generating plants included approximately 1.5 million metric tons of $CO_2$, which comprises the vast majority of PNM's GHG emissions.

As of March 31, 2025, approximately 28% of PNM's generating capacity, including resources owned, leased, under PPAs or ESAs, all of which is located within the U.S., consisted of coal or gas-fired generation that produces GHG emissions. As PNM shifts its generation to cleaner energy resources, the Company's output of GHG emissions continues to decrease. Many factors affect the amount of GHG emitted, including total electricity sales, plant performance, economic dispatch, and the availability of renewable resources. For example, wind generation performance from PNM's largest single renewable energy resource, New Mexico Wind, varies each year as a result of highly seasonal wind patterns and annual wind resource variability. Similarly, if PVNGS experienced prolonged outages or if PNM's entitlement from PVNGS were reduced, PNM might be required to utilize other power supply resources such as gas-fired generation, which could increase GHG emissions.

PNM has several programs underway to reduce or offset GHG emissions from its generation resource portfolio, thereby reducing its exposure to climate change regulation. PNM shut down SJGS Units 2 and 3 as part of its strategy to address the regional haze requirements of the CAA. The shutdown of SJGS Units 2 and 3 resulted in a reduction of GHG emissions for the entire station of approximately 54% for 2018, reflecting a reduction of 32% of GHG emissions from the Company's owned interests in SJGS, below 2005 levels. PNM shut down the remaining SJGS Units 1 and 4 on June 30, 2022 and September 30, 2022, respectively, resulting in additional reductions GHG emissions. Retiring PNM's share of SJGS in 2022 resulted in a GHG emissions reduction from 2021 levels of 67% of PNM's GHG emissions based upon 2021 GHG emissions from generation.

PNM's utility-owned solar and energy storage capacity, as well as solar, energy storage, wind, and geothermal procurements in service as of March 31, 2025 have a total net generation capacity of 2,779 MW. The NMPRC has approved plans for PNM to procure energy and RECs from additional resources to serve retail customers and a data center located in PNM's service territory. PNM's approved resource plans have a generation capacity of 910 MW and are expected to be in service beginning in the summer of 2026. This includes approximately 310 MW of capacity under the Community Solar Act which will allow PNM to provide customers the option of accessing solar energy. In addition, PNM has its 2028 Resource Application with the NMPRC seeking approval of resources to be available for the 2028 summer peak, which are necessary for PNM to meet forecasted peak load requirements to serve its customers and to continue progress towards a carbon-free generating portfolio. These estimates are subject to change due to underlying variables, including changes in PNM's generation portfolio, supplier's ability to meet contractual in-service dates and complex relationships between several factors.

PNM also has a customer distributed solar generation program that represented 314.9 MW at March 31, 2025. PNM's distributed solar programs will generate an estimated 629.8 GWh of emission-free solar energy available this year to offset PNM's annual production from fossil-fueled electricity generation. PNM has offered its customers a comprehensive portfolio of energy efficiency and load management programs since 2007. PNM's cumulative savings from these programs were an estimated 8,227 GWh of electricity through 2024. PNM projects energy efficiency and load management programs between 2025 and 2039 will provide the equivalent of approximately 11,900 GWh of electricity savings, which will avoid approximately 1.2 million tons of $CO_2$ based upon projected emissions from PNM's portfolio of resources. These estimates are subject to change because of the uncertainty of many of the underlying variables, including changes in PNM's generation portfolio, demand for electricity, energy efficiency, and complex relationships between those variables.

Because of PNM's dependence on fossil-fueled generation, legislation or regulation that imposes a limit or cost on GHG could impact the cost at which electricity is produced. While PNM expects to recover any such costs through rates, the timing and outcome of proceedings for cost recovery are uncertain. In addition, to the extent that any additional costs are

Table of Contents

recovered through rates, customers may reduce their usage, relocate facilities to other areas with lower energy costs, or take other actions that ultimately could adversely impact PNM.

*Other Climate Change Risks*

PNM's generating stations are located in the arid southwest. Access to water for cooling for some of these facilities is critical to continued operations. Forecasts for the impacts of climate change on water supply in the southwest range from reduced precipitation to changes in the timing of precipitation. In either case, PNM's generating facilities requiring water for cooling will need to mitigate the impacts of climate change through adaptive measures. Current measures employed by PNM generating stations include the use of sustainable, less variable groundwater supplies, and investments in technologies such as air cooling and cooling water recycling. These types of actions will continue to be important to sustain operations.

PNM's service areas occasionally experience periodic high winds and severe thunderstorms. TNMP has operations in the Gulf Coast area of Texas, which experiences periodic hurricanes and other extreme weather conditions. In addition to potentially causing physical damage to Company-owned facilities, which disrupts the ability to transmit and/or distribute energy, weather and other events of nature can temporarily reduce customers' usage and demand for energy. In addition, other events influenced by climate change, such as wildfires, could disrupt Company operations or result in third-party claims against the Company. PNM has enhanced its wildfire prevention efforts and maintains a wildfire mitigation plan and a public safety power shutoff plan. TNMP has also developed a wildfire mitigation plan. However, both PNM and TNMP remain at risk for wildfires outside of their control and the resulting damages in their service areas.

*EPA Regulation*

In 2007, the U.S. Supreme Court held that EPA has the authority to regulate GHG emissions under the CAA, and in 2009, EPA released its endangerment finding for GHG from new motor vehicles, stating that the atmospheric concentrations of six key greenhouse gases ($CO_2$, methane, nitrous oxides, hydrofluorocarbons, perfluorocarbons, and sulfur hexafluoride) endanger the public health and welfare. These actions triggered new GHG permitting requirements for stationary sources, including the energy industry, under the Prevention of Significant Deterioration ("PSD") and Title V program, although the U.S. Supreme Court held the CAA does not authorize EPA to require a source to obtain a PSD permit solely on the basis of its potential GHG emissions.

EPA also determined that its finding of endangerment requires it to issue performance standards under Section 111 of the CAA to regulate GHG emissions from new and existing stationary sources, including fossil fuel fired electric generating units. Accordingly, in 2015, EPA issued Carbon Pollution Standards for new, modified, and reconstructed power plants (under Section 111(b)) and the Clean Power Plan for existing power plants (under Section 111(d)).

EPA's Carbon Pollution Standards for new sources (those constructed after January 8, 2014) established separate standards for gas and coal-fired units deemed achievable through the application of what EPA determined to be the BSER demonstrated for each type of unit: efficient natural gas combined cycle technology for gas units, and partial carbon capture and sequestration for coal units. The Clean Power Plan established numeric "emission standards" for existing electric generating units based on emission reduction opportunities that EPA deemed achievable using technical assumptions for three "building blocks": efficiency improvements at coal-fired EGUs, displacement of affected EGUs with renewable energy, and displacement of coal-fired generation with natural gas-fired generation. EPA used those "emission standards" to set state emission reduction goals that formed the basis of a trading program that relied on "generation shifting" to reduce emissions from the power sector as a whole.

Multiple states, utilities, and trade groups challenged both the Carbon Pollution Standards for new sources and the Clean Power Plan for existing sources in separate cases, and the challengers successfully petitioned the U.S. Supreme Court for a stay of the Clean Power Plan.

In 2019, EPA repealed the Clean Power Plan, promulgated the ACE Rule, and revised the implementing regulations for all emission guidelines issued under CAA Section 111(d). The ACE Rule was also challenged, and on January 19, 2021, the DC Circuit issued an opinion in American Lung Association and American Public Health Association v. EPA, et al. vacating the ACE Rule.

Numerous parties sought review by the U.S. Supreme Court and on June 30, 2022, the Court held that the "generation shifting" approach in the Clean Power Plan exceeded the powers granted to EPA by Congress, though the Court did not address the related issue of whether Section 111 of the CAA only authorizes EPA to require measures that can be implemented entirely within the fence line at an individual source. Of broader significance in administrative law, the Court's opinion expressly invoked the major questions doctrine, which requires rules involving issues of "vast economic or political significance," to be supported by clear statutory authorization. In cases where there is no clear statement of authority, courts need not defer to the agency's statutory interpretation on "major questions." The decision sets legal precedent for future rulemakings by EPA and other federal regulatory agencies whereby the agency's authority may be limited based upon similar reasoning.

Table of Contents

The litigation over the Carbon Pollution Standards remains held in abeyance but could be reactivated by the parties upon a determination by the court that reconsideration of the rule has concluded.

In 2024, EPA adopted regulatory actions under CAA Sections 111(b) and (d) to replace the Clean Power Plan and the ACE Rule. The final rules include revised new source performance standards under Section 111(b) for all new natural gas-fired combustion turbines and emission guidelines under Section 111(d) requiring states to develop standards of performance for GHG emissions from existing fossil-fuel-fired electric steam generating units. In the final rules, EPA determined that the standards for existing coal- or gas-fired steam generating units must be based on the use of either CCS (long-term), natural gas co-firing (medium-term), or exempt from the rule via early retirement. The standards for new combustion turbines must be based on CCS (base load), efficient simple cycle design (intermediate load), or lower-emitting fuels (low load). Over a dozen states, several industry groups and some power companies and labor unions have filed challenges to the rule at the DC Circuit, which heard oral arguments on December 6, 2024.

On January 20, 2025, President Trump signed an executive order entitled "Unleashing American Energy" directing all agencies, including EPA, to review all agency actions and suspend, revise, or rescind those identified as imposing an undue burden on domestic energy resources. The order also disbands the Interagency Working Group on the Social Cost of Greenhouse Gases ("IWG"), eliminates the "social cost of carbon" from consideration in any Federal permitting or regulatory decision, and expressly directs EPA to submit joint recommendations on the legality and continuing applicability of the 2009 endangerment finding for greenhouse gases that currently provides the legal basis for EPA to regulate greenhouse gases under the CAA. On March 12, 2025, EPA announced it will formally reconsider the 2009 endangerment finding in collaboration with the OMB and other relevant agencies. Under the new Trump Administration, the agency is unlikely to propose a rule based on this non-regulatory docket.

*Federal Legislation*

In 2022, President Biden signed the IRA providing nearly $370 billion in climate action over the next decade. The legislation is aimed at reducing carbon emissions by investing in a variety of efforts, including tax credits for renewables, energy storage, carbon capture, and electric vehicle sales. The future of the IRA is uncertain under the new Trump Administration, given the control of both houses of Congress by the Republican Party led by President Trump, and no other Federal legislation on climate change is expected during this Congress.

*State and Regional Activity*

Pursuant to New Mexico law, each utility must submit an IRP to the NMPRC every three years to evaluate renewable energy, energy efficiency, load management, distributed generation, and conventional supply-side resources on a consistent and comparable basis. The IRP is required to take into consideration risk and uncertainty of fuel supply, price volatility, and costs of anticipated environmental regulations when evaluating resource options to meet supply needs of the utility's customers. The NMPRC requires that New Mexico utilities factor a standardized cost of carbon emissions into their IRPs using prices ranging between $8 and $40 per metric ton of $CO_2$ emitted and escalating these costs by 2.5% per year. Under the NMPRC order, each utility must analyze these standardized prices as projected operating costs. Reflecting the evolving nature of this issue, the NMPRC order states that these prices may be changed in the future to account for additional information or changed circumstances. Although these prices may not reflect the costs that ultimately will be incurred, PNM is required to use these prices for purposes of its IRP. PNM's 2023 filing has a continued focus on a carbon-free energy system by 2040. The plan highlights the need for the significant sustained addition of resources over the next two decades, replacing retiring or expiring capacity, meeting concurrent load growth, while reducing the carbon intensity of PNM's portfolio.

The ETA, among other things, requires that investor-owned utilities obtain specified percentages of their energy from renewable and carbon-free resources. The ETA requires utilities operating in New Mexico to have renewable portfolios equal to 40% by 2025, 50% by 2030, 80% by 2040, and 100% zero-carbon energy by 2045. Under the ETA provisions, PNM will also be required to meet a generation emission standard of no more than 400 lbs. of $CO_2$ per MWh beginning in 2023 and not more than 200 lbs. per MWh beginning in 2032. PNM takes this requirement into account in its resource planning and will manage compliance with the standards based upon existing generation resources and approved resource retirements and replacements. The ETA provides for a transition from fossil-fuel generating resources to renewable and other carbon-free resources by allowing investor-owned utilities to issue securitized bonds related to the retirement of coal-fired generating facilities to qualified investors.

The ETA has a significant impact on PNM's future generation portfolio. In 2022, in compliance with the ETA, the NMED announced a new rulemaking, Carbon Dioxide Emission Standards for Electric Generating Facilities, to develop carbon emission standards for new and existing electric coal-fired generating facilities. In 2022, the rule was passed which adopts new carbon emission standards for new and existing coal-fired power plants. In compliance with the ETA, PNM filed its first $CO_2$ Emissions Measurement and Compliance Annual Report on March 14, 2025.

Table of Contents

In 2020, the NMPRC approved PNM's San Juan abandonment application and for the issuance of securitized bonds consistent with the requirements of the ETA and in 2023 PNM issued the ETBC I Securitized Bonds. PNM cannot predict the full impact of the ETA with respect to Four Corners.

*International Accords*

The United Nations Framework Convention on Climate Change ("UNFCCC") is an international environmental treaty that was negotiated at the 1992 United Nations Conference on Environment and Development (informally known as the Earth Summit) and entered into force in March 1994. The objective of the treaty is to "stabilize greenhouse gas concentrations in the atmosphere at a level that would prevent dangerous anthropogenic interference with the climate system." Parties to the UNFCCC, including the U.S., have been meeting annually in Conferences of the Parties ("COP") to assess progress in meeting the objectives of the UNFCCC.

In 2015, the Paris Agreement was finalized during the 2015 COP. The aim of the Paris Agreement is to limit global temperature rise to two degrees Celsius above pre-industrial levels. The agreement, which was agreed to by approximately 200 parties, requires that countries submit INDCs. INDCs reflect national targets and actions that arise out of national policies and elements relating to oversight, guidance and coordination of actions to reduce emissions by all countries. In November 2014, then President Obama announced the United States' commitment to reduce GHG, on an economy-wide basis, by 26%-28% from 2005 levels by the year 2025. The U.S. INDC was part of an overall effort by the former administration to have the U.S. achieve economy-wide reductions of around 80% by 2050. The former administration's GHG reduction target for the electric utility industry was a key element of its INDC and was based on EPA's GHG regulations for new, existing, and modified and reconstructed sources at that time. Thresholds for the number of countries necessary to ratify or accede to the Paris Agreement and total global GHG percentage were achieved on October 5, 2016 and the Paris Agreement entered into force on November 4, 2016. In 2017, President Trump announced that the U.S. would withdraw from the Paris Agreement. As a result of the President's notice to the United Nations, the U.S. officially withdrew from the Paris Agreement on November 4, 2020. On January 20, 2021, President Biden signed an instrument that will allow the U.S. to rejoin the Paris Agreement. The instrument was deposited with the United Nations on January 21, 2021, and the U.S. officially became a party to the Paris Agreement on February 19, 2021. On January 20, 2025, President Trump signed an executive order entitled "Putting America First in International Environmental Agreements," directing the United States Ambassador to the United Nations to immediately submit formal written notification of the United States' withdrawal from the Paris Agreement and any other agreement, pact, accord, or similar commitment made under the United Nations Framework Convention on Climate Change.

PNM has calculated GHG reductions that would result from scenarios that capture PNM's retirement of its share of the SJGS in 2022 and assume exiting Four Corners in 2031 and PNM has set a goal to have a 100% carbon-free generating portfolio by 2040. While the Company has not conducted an independent 2 Degree Scenario analysis, our commitment to becoming 100% carbon-free by 2040 produces a carbon emissions reduction pathway that tracks within the ranges of climate scenario pathways that are consistent with limiting the global warming average to less than 2 degrees Celsius. In addition, as an investor-owned utility operating in the state of New Mexico, PNM is required to comply with the ETA, which requires utilities' generating portfolio be 100% carbon-free by 2045. The requirements of the ETA and the Company's goal compare favorably to the U.S. INDC of 50% to 52% carbon emissions reduction by 2030 and the Biden Administration's goal of net-zero carbon emissions economy-wide by 2050. On April 1, 2020, the NMPRC approved PNM's application to retire its share of SJGS in 2022.

PNM will continue to monitor the United States' move to withdraw from the Paris Agreement and other parties' involvement in these types of international accords, but the potential impact that such accords may have on the Company cannot be determined at this time.

*Assessment of Legislative/Regulatory Impacts*

The Company has assessed, and continues to assess, the impacts of climate change legislation and regulation on its business. This assessment is ongoing and future changes arising out of the legislative or regulatory process could impact the assessment significantly. PNM's assessment includes assumptions regarding specific GHG limits; the timing of implementation of these limits; the possibility of a market-based trading program, including the associated costs and the availability of emission credits or allowances; the development of emission reduction and/or renewable energy technologies; and provisions for cost containment. Moreover, the assessment assumes various market reactions such as the price of coal and gas and regional plant economics. These assumptions are, at best, preliminary and speculative. However, based upon these assumptions, the enactment of climate change legislation or regulation could, among other things, result in significant compliance costs, including large capital expenditures by PNM, and could jeopardize the Company's reputation as well as the economic viability of certain generating facilities. The ultimate consequences of increased stakeholder scrutiny related to climate change and environmental regulation could lead to increased costs to customers and affect results of operations, cash flows, and financial condition if the incurred costs are not fully recovered through regulated rates. Higher rates could also contribute to reduced usage of electricity. PNM's assessment process is evolving and is too speculative at this time for a meaningful prediction of the long-term financial impact.

Table of Contents

**Transmission Issues**

At any given time, FERC has various notices of inquiry and rulemaking dockets related to transmission issues pending. Such actions may lead to changes in FERC administrative rules or ratemaking policy but have no time frame in which action must be taken or a docket closed with no further action. Further, such notices and rulemaking dockets do not apply strictly to PNM but will have industry-wide effects in that they will apply to all FERC-regulated entities. PNM monitors and often submits comments taking a position in such notices and rulemaking dockets or may join in larger group responses. PNM often cannot determine the full impact of a proposed rule and policy change until the final determination is made by FERC and PNM is unable to predict the outcome of these matters.

**Other Matters**

See Notes 11 and 12 herein and Notes 16 and 17 of the Notes to Consolidated Financial Statements in the 2024 Annual Reports on Form 10-K for a discussion of commitments and contingencies and rate and regulatory matters.

## CRITICAL ACCOUNTING POLICIES AND ESTIMATES

The preparation of financial statements in accordance with GAAP requires Company management to select and apply accounting policies that best provide the framework to report the results of operations and financial position for TXNM, PNM, and TNMP. The selection and application of those policies requires management to make difficult, subjective, and/or complex judgments concerning reported amounts of revenue and expenses during the reporting period and the reported amounts of assets and liabilities at the date of the financial statements. As a result, there exists the likelihood that materially different amounts would be reported under different conditions or using different assumptions.

As of March 31, 2025, there have been no significant changes with regard to the critical accounting policies disclosed in TXNM's, PNM's, and TNMP's 2024 Annual Reports on Forms 10-K. The policies disclosed included regulatory accounting, impairments, decommissioning and reclamation costs, pension and other postretirement benefits, accounting for contingencies, and income taxes.

## *MD&A FOR TNMP*

## RESULTS OF OPERATIONS

TNMP operates in only one reportable segment, as presented above in Results of Operations for TXNM.

## *MD&A FOR PNM*

## RESULTS OF OPERATIONS

PNM operates in only one reportable segment, as presented above in Results of Operations for TXNM.

## DISCLOSURE REGARDING FORWARD LOOKING STATEMENTS

Statements made in this filing that relate to future events or TXNM's, PNM's, or TNMP's expectations, projections, estimates, intentions, goals, targets, and strategies are made pursuant to the Private Securities Litigation Reform Act of 1995. Readers are cautioned that all forward-looking statements are based upon current expectations and estimates and apply only as of the date of this report. TXNM, PNM, and TNMP assume no obligation to update this information.

Because actual results may differ materially from those expressed or implied by these forward-looking statements, TXNM, PNM, and TNMP caution readers not to place undue reliance on these statements. TXNM's, PNM's, and TNMP's business, financial condition, cash flows, and operating results are influenced by many factors, which are often beyond their control, that can cause actual results to differ from those expressed or implied by the forward-looking statements.

Table of Contents

These factors, which are neither presented in order of importance nor weighted, include:

- The ability of PNM and TNMP to recover costs and earn allowed returns in regulated jurisdictions and the impact on service levels for PNM customers if the ultimate outcomes do not provide for the recovery of costs and operating and capital expenditures, as well as other impacts of federal or state regulatory and judicial actions
- The ability of the Company to successfully forecast and manage its operating and capital expenditures, including aligning expenditures with the revenue levels resulting from the ultimate outcomes of regulatory proceedings
- Uncertainty surrounding the status of PNM's participation in jointly-owned generation projects
- Uncertainty regarding the requirements and related costs of decommissioning power plants and reclamation of coal mines, as well as the ability to recover those costs from customers, including the potential impacts of current and future regulatory proceedings
- The impacts on the electricity usage of customers and consumers due to performance of state, regional, and national economies, energy efficiency measures, weather, seasonality, alternative sources of power, advances in technology, and other changes in supply and demand
- Uncertainty related to the potential for regulatory orders, legislation or rulemakings that provide for municipalization of utility assets or public ownership of utility assets, including generation resources, or which would delay or otherwise impact the procurement of necessary resources in a timely manner
- The Company's ability to maintain its debt, including convertible debt, and access the financial markets in order to repay or refinance debt as it comes due and for ongoing operations and construction expenditures due to disruptions in the capital or credit markets, actions by ratings agencies, and fluctuations in interest rates resulting from any negative impacts from regulatory proceedings, actions by the Federal Reserve, geopolitical activity, including tariffs, or the risk of wildfires and storms
- The risks associated with the cost and completion of generation, transmission, distribution, and other projects, including uncertainty related to regulatory approvals and cost recovery, the ability of counterparties to meet their obligations under certain arrangements (including renewable energy resources, approved PPAs and ESAs), and supply chain or other outside support services that may be disrupted
- The potential unavailability of cash from TXNM's subsidiaries due to regulatory, statutory, or contractual restrictions or subsidiary earnings or cash flows
- The performance of generating units, transmission systems, and distribution systems, which could be negatively affected by operational issues, fuel quality and supply chain issues (disruptions), unplanned outages, extreme weather conditions, wildfires, storms, terrorism, cybersecurity breaches, and other catastrophic events, including the costs the Company may incur to repair its facilities and/or the liabilities the Company may incur to third parties in connection with such issues beyond the extent of insurance coverage
- State and federal regulation or legislation relating to environmental matters and renewable energy requirements, the resultant costs of compliance, and other impacts on the operations and economic viability of PNM's generating plants
- State and federal regulatory, legislative, executive, and judicial decisions and actions on ratemaking, tariffs, and taxes, including guidance related to the interpretation of changes in tax laws, the Inflation Reduction Act, the Infrastructure Investment and Jobs Act, and other matters
- Risks related to climate change, including potential financial and reputational risks resulting from increased stakeholder scrutiny related to climate change, litigation, legislative and regulatory efforts to limit GHG, including the impacts of the ETA
- Employee workforce factors, including cost control efforts and issues arising out of collective bargaining agreements and labor negotiations with union employees
- Variability of prices and volatility and liquidity in the wholesale power and natural gas markets, including the impacts to transmission margins
- Changes in price and availability of fuel and water supplies, including the ability of the mine supplying coal to Four Corners and the companies involved in supplying nuclear fuel to provide adequate quantities of fuel
- Regulatory, financial, and operational risks inherent in the operation of nuclear facilities, including spent fuel disposal uncertainties
- The impacts of decreases in the values of marketable securities maintained in trusts to provide for decommissioning, reclamation, pension benefits, and other postretirement benefits, including potential increased volatility resulting from actions by the Federal Reserve to address inflationary concerns, and international developments
- Uncertainty surrounding counterparty performance and credit risk, including the ability of counterparties to supply fuel and perform reclamation activities and impacts to financial support provided to facilitate reclamation and decommissioning at SJGS
- The effectiveness of risk management regarding commodity transactions and counterparty risk
- The outcome of legal proceedings, including the extent of insurance coverage
- Changes in applicable accounting principles or policies

Any material changes to risk factors occurring after the filing of TXNM's, PNM's, and TNMP's 2024 Annual Reports on Form 10-K are disclosed in Item 1A, Risk Factors, in Part II of this Form 10-Q.

For information about the risks associated with the use of derivative financial instruments, see Item 3. "Quantitative and Qualitative Disclosures About Market Risk."

**SECURITIES ACT DISCLAIMER**

Certain securities described or cross-referenced in this report have not been registered under the Securities Act, or any state securities laws and may not be reoffered or sold in the United States absent registration or an applicable exemption from the registration requirements of the Securities Act and applicable state securities laws. This Form 10-Q does not constitute an offer to sell or the solicitation of an offer to buy any securities.

**WEBSITES**

The TXNM website, www.txnmenergy.com, is an important source of Company information. New or updated information for public access is routinely posted. TXNM encourages analysts, investors, and other interested parties to register on the website to automatically receive Company information by e-mail. This information includes news releases, notices of webcasts, and filings with the SEC. Participants will not receive information that was not requested and can unsubscribe at any time.

Our corporate internet addresses are:

- TXNM: www.txnmenergy.com
- PNM: www.pnm.com
- TNMP: www.tnmp.com

TXNM's corporate website includes a dedicated section providing key environmental and other information related to PNM's and TNMP's operations, including information that collectively demonstrates the Company's commitment to sustainability. This information highlights plans for PNM to be coal-free no later than 2031 and to have a carbon-free generating portfolio by 2040.

The contents of these websites are not a part of this Form 10-Q. The SEC filings of TXNM, PNM, and TNMP, including annual reports on Form 10-K, quarterly reports on Form 10-Q, current reports on Form 8-K, and amendments to those reports filed or furnished pursuant to Section 13(a) or 15(d) of the Exchange Act, are accessible free of charge on the TXNM website as soon as reasonably practicable after they are filed with, or furnished to, the SEC. Reports filed with the SEC are available on its website, www.sec.gov. These reports are also available in print upon request from TXNM free of charge.

Also available on the Company's website at https://www.txnmenergy.com/sustainability/governance/governance-documents.aspx and in print upon request from any shareholder are TXNM's:

- Corporate Governance Principles
- Code of Ethics (*Do the Right Thing – Principles of Business Conduct; Supplier Code of Conduct*)
- Charters of the Audit and Ethics Committee, Nominating and Governance Committee, Compensation and Human Resources Committee, and Finance Committee
- Restated Articles of Incorporation and Bylaws

The Company will post amendments to or waivers from its code of ethics (to the extent applicable to the Company's executive officers and directors) on its website.

**ITEM 3. QUANTITATIVE AND QUALITATIVE DISCLOSURES ABOUT MARKET RISK**

The Company manages the scope of its various forms of market risk through a comprehensive set of policies and procedures with oversight by senior level management through the Risk Management Committee ("RMC"). The Board's Finance Committee sets the risk limit parameters. The RMC has oversight over the risk control organization. The RMC is assigned responsibility for establishing and enforcing the policies, procedures, and limits and evaluating the risks inherent in proposed transactions on an enterprise-wide basis.

The RMC's responsibilities include:

- Establishing policies regarding risk tolerance levels and activities in each of the business segments
- Approving new types of derivatives entered into for marketing and hedging
- Reviewing and approving hedging risk activities
- Establishing policies regarding counterparty credit exposure and limits
- Authorizing and delegating transaction limits
- Reviewing and approving controls and procedures for derivative activities
- Reviewing and approving models and assumptions used to calculate mark-to-market and market risk exposure
- Proposing risk limits to the Board's Finance Committee for its approval
- Reporting to the Board's Audit and Finance Committees on these activities

Table of Contents

To the extent an open position exists, fluctuating commodity prices, interest rates, equity prices, and economic conditions can impact financial results and financial position, either favorably or unfavorably. As a result, the Company cannot predict with certainty the impact that its risk management decisions may have on its businesses, operating results, or financial position.

**Commodity Risk**

Information concerning accounting for derivatives and the risks associated with commodity contracts is set forth in Note 7, including a summary of the fair values of mark-to-market energy related derivative contracts included in the Condensed Consolidated Balance Sheets. During the three months ended March 31, 2025, and the year ended December 31, 2024, the Company had no commodity derivative instruments designated as cash flow hedging instruments.

Commodity contracts that meet the definition of a derivative are recorded at fair value on the Condensed Consolidated Balance Sheets. In the three months ended March 31, 2025 and 2024, the effects of mark-to-market commodity derivative instruments had no impact to PNM's net earnings and $0.6 million of fair value losses and less than $0.1 million of fair value gains have been recorded as a regulatory asset and a regulatory liability. All of the fair values as of March 31, 2025 and December 31, 2024, were determined based on prices provided by external sources other than actively quoted market prices. The net mark-to-market amounts will settle by the end of 2025.

PNM may be exposed to changes in the market prices of electricity and natural gas for the positions in its wholesale portfolio not covered by the FPPAC. The Company manages risks associated with market fluctuations by utilizing various commodity instruments that may qualify as derivatives, including futures, forwards, options, and swaps. PNM uses such instruments to hedge its exposure to changes in the market prices of electricity and natural gas. PNM also uses such instruments under an NMPRC approved hedging plan to manage fuel and purchased power costs related to customers covered by its FPPAC.

**Credit Risk**

The Company is exposed to credit risk from its retail and wholesale customers, as well as the counterparties to derivative instruments. The Company conducts counterparty risk analysis across business segments and uses a credit management process to assess the financial conditions of counterparties. The following table provides information related to credit exposure by the credit worthiness (credit rating) and concentration of credit risk for wholesale counterparties, all of which will mature in less than two years.

**Schedule of Credit Risk Exposure**
**March 31, 2025**

| Rating [1] | Credit Risk Exposure[2] | Number of Counter-parties >10% | Net Exposure of Counter-parties >10% |
|---|---|---|---|
| | (Dollars in thousands) | | |
| External ratings: | | | |
| Investment grade | $ 361 | 2 | $ 350 |
| Non-investment grade | — | — | — |
| Split ratings | — | — | — |
| Internal ratings: | | | |
| Investment grade | 552 | — | — |
| Non-investment grade | — | — | — |
| Total | $ 913 | | $ 350 |

(1) The rating "Investment Grade" is for counterparties, or a guarantor, with a minimum S&P rating of BBB- or Moody's rating of Baa3. The category "Internal Ratings – Investment Grade" includes those counterparties that are internally rated as investment grade in accordance with the guidelines established in the Company's credit policy.

(2) The Credit Risk Exposure is the gross credit exposure, including long-term contracts, forward sales, and short-term sales. The gross exposure captures the amounts from receivables/payables for realized transactions, delivered and unbilled revenues, and mark-to-market gains/losses. Gross exposures can be offset according to legally enforceable netting arrangements but are not reduced by posted credit collateral. At March 31, 2025, TXNM held zero of cash collateral to offset its credit exposure.

Net credit risk for the Company's largest counterparty as of March 31, 2025, was $0.2 million.

Other investments have no significant counterparty credit risk.

Table of Contents

**Interest Rate Risk**

The majority of PNM's and TNMP's long-term debt is fixed-rate debt, which does not expose earnings to adverse changes in market interest rates. PNM and TNMP earnings are exposed to adverse changes in market interest rates when long-term debt must be refinanced, repriced or redeemed. TXNM's debt and the revolving credit facilities of PNM and TNMP are exposed to interest rate risk to the extent variable interest rates continue to rise. The Company periodically makes plans to reduce its variable interest rate exposures through various instruments including fixed rate debt and equity and hedging arrangements like those executed by TXNM in 2022 and 2023, and otherwise expects that it will be able to extend or replace variable rate debt under similar terms and conditions prior to their expirations. Variable interest rates under the TXNM, PNM, and TNMP revolving credit facilities and term loans are based on SOFR.

At April 25, 2025, variable rate debt balances and weighted average interest rates were as follows:

| Variable Rate Debt | Weighted Average Interest Rate | Balance Outstanding | Capacity |
|---|---|---|---|
| | | (In thousands) | |
| Short-term Debt: | | | |
| TXNM Revolving Credit Facility | 5.92 % | $ 158,000 | $ 300,000 |
| PNM Revolving Credit Facility | 5.67 | 17,700 | 400,000 |
| PNM New Mexico Credit Facility | 5.67 | 20,000 | 40,000 |
| TNMP Revolving Credit Facility | 5.28 | 155,700 | 200,000 |
| | | $ 351,400 | $ 940,000 |
| Long-term Debt: | | | |
| TXNM 2021 Delayed-Draw Term Loan | 5.37 % | $ 51,000 | |
| TXNM 2023 Term Loan | 5.77 | 410,000 | |
| PNM 2024 Term Loan | 5.32 | 200,000 | |
| PNM 2025 Term Loan | 5.32 | 195,000 | |
| | | $ 856,000 | |

The investments held by PNM in trusts for decommissioning and reclamation had an estimated fair value of $470.2 million at March 31, 2025, of which 11.6% were fixed-rate debt securities that subject PNM to risk of loss of fair value with increases in market interest rates. If interest rates were to increase by 50 basis points from their levels at March 31, 2025, the decrease in the fair value of the fixed-rate securities would be 0.2%, or $0.1 million.

PNM does not directly recover or return through rates any losses or gains on the securities, including equity investments discussed below, in the trusts for decommissioning and reclamation. However, the overall performance of these trusts does enter into the periodic determinations of expense and funding levels, which are factored into the rate making process to the extent applicable to regulated operations. PNM is at risk for shortfalls in funding of obligations due to investment losses, including those from the equity market risks discussed below, to the extent not ultimately recovered through rates charged to customers.

**Equity Market Risk**

The investments held by PNM in trusts for decommissioning and reclamation include certain equity securities at March 31, 2025. These equity securities expose PNM to losses in fair value should the market values of the underlying securities decline. Equity securities comprised 66.3% of the securities held by the trusts as of March 31, 2025. A hypothetical 10% decrease in equity prices would reduce the fair values of these funds by $31.2 million.

**ITEM 4. CONTROLS AND PROCEDURES**

**Evaluation of disclosure controls and procedures**

As of the end of the period covered by this quarterly report, each of TXNM, PNM, and TNMP conducted an evaluation, under the supervision and with the participation of its management, including its Chief Executive Officer and Chief Financial Officer, of the effectiveness of the design and operation of the disclosure controls and procedures (as defined in Rules 13a-15(e) and 15d-15(e) under the Securities Exchange Act of 1934). Based upon this evaluation, the Chief Executive Officer and the Chief Financial Officer of each of TXNM, PNM, and TNMP concluded that the disclosure controls and procedures are effective.

**Changes in internal controls over financial reporting**

There have been no changes in each of TXNM's, PNM's, and TNMP's internal control over financial reporting (as such term is defined in Rules 13a-15(f) and 15d-15(f) under the Securities Exchange Act of 1934) during the quarter ended

March 31, 2025, that have materially affected, or are reasonably likely to materially affect, each of TXNM's, PNM's, and TNMP's internal control over financial reporting.

**PART II. OTHER INFORMATION**

[None]

**ITEM 1. LEGAL PROCEEDINGS**

See Note 12 for information related to the following matters, for TXNM, PNM, and TNMP, incorporated in this item by reference.

**Note 12**

- PNM – 2024 Rate Change
- PNM – 2025 Rate Request
- PNM – Integrated Resource Plans
- PNM – Grid Modernization Plan
- TNMP – Transmission Cost of Service Rates
- TNMP – Periodic Distribution Rate Adjustment

**ITEM 1A. RISK FACTORS**

As of the date of this report, there have been no material changes with regard to the Risk Factors disclosed in TXNM's, PNM's, and TNMP's Annual Reports on Form 10-K for the year ended December 31, 2024.

**ITEM 5. OTHER INFORMATION**

During the three months ended March 31, 2025, no director or officer (as defined by Rule 16a-1(f) of the Exchange Act) of the Company adopted or terminated a "Rule 10b5-1 trading arrangement" or "non-Rule 10b5-1 trading arrangement," as each term is defined in Item 408(a) of Regulation S-K.

**ITEM 6. EXHIBITS**

| | | |
|---|---|---|
| 3.1 | TXNM | Restated Articles of Incorporation of TXNM, as amended to date (incorporated by reference to Exhibit 3.1 to TXNM's Current Report on Form 8-K filed August 5, 2024) |
| 3.2 | PNM | Restated Articles of Incorporation of PNM, as amended through May 31, 2002 (incorporated by reference to Exhibit 3.1.1 to PNM's Quarterly Report on Form 10-Q for the quarter ended June 30, 2002) |
| 3.3 | TNMP | Articles of Incorporation of TNMP, as amended through July 7, 2005 (incorporated by reference to Exhibit 3.1.2 to TNMP's Quarterly Report on Form 10-Q for the quarter ended June 30, 2005) |
| 3.4 | TXNM | Bylaws of TXNM, with all amendments to and including August 2, 2024 (incorporated by reference to Exhibit 3.2 to TXNM's Current Report on Form 8-K filed August 5, 2024) |
| 3.5 | PNM | Bylaws of PNM, with all amendments to and including July 1, 2022 (incorporated by reference to Exhibit 3.5 to PNM's Current Report on Form 8-K filed July 1, 2022) |
| 3.6 | TNMP | Bylaws of TNMP, with all amendments to and including June 18, 2013 (incorporated by reference to Exhibit 3.6 to TNMP's Current Report on Form 8-K filed June 20, 2013) |
| 4.1 | TNMP | Twenty-Third Supplemental Indenture, dated as of February 14, 2025, between TNMP and U.S. Bank Trust Company, National Association, as Trustee (incorporated by reference to Exhibit 4.1 to TNMP's Current Report on Form 8-K filed February 14, 2025) |
| 10.1 | TNMP | Bond Purchase Agreement, dated February 14, 2025, between TNMP and the purchasers named therein (incorporated by reference to Exhibit 10.1 to TNMP's Current Report on Form 8-K filed February 14, 2025) |
| 10.2 | PNM | Term Loan Agreement, dated as of January 21, 2025, among PNM, the lender parties thereto and Canadian Imperial Bank of Commerce, New York Branch, as Administrative Agent (incorporated by reference to Exhibit 10.1 to PNM's Current Report on Form 8-K filed January 21, 2025) |
| 10.3 | TXNM | TXNM 2025 Officer Annual Incentive Plan dated April 17, 2025 |
| 10.4 | TXNM | Fourth Amendment, dated April 17, 2025 to TXNM 2023 Long-Term Incentive Plan |

Table of Contents

| | | |
|---|---|---|
| 10.5 | TXNM | Third Amendment, dated April 17, 2025 to TXNM 2024 Long-Term Incentive Plan |
| 10.6 | TXNM | TXNM 2025 Long-Term Incentive Plan dated April 17, 2025 |
| 10.7 | TXNM | Fourth Amendment to TXNM Energy, Inc. Executive Choice Account Plan (formerly PNM Resources, Inc. Executive Spending Account) effective January 1, 2025 |
| 10.8 | TXNM | Second Amendment to TXNM Energy, Inc. Non-Union Severance Pay Plan (formerly PNM Resources, Inc. Non-Union Severance Pay Plan) effective January 1, 2025 |
| 10.9 | TXNM | First Amendment to TXNM Energy, Inc. Officer Retention Plan (formerly PNM Resources, Inc. Officer Retention Plan) effective January 1, 2025 |
| 31.1 | TXNM | Chief Executive Officer Certification Pursuant to Section 302 of the Sarbanes-Oxley Act of 2002 |
| 31.2 | TXNM | Chief Financial Officer Certification Pursuant to Section 302 of the Sarbanes-Oxley Act of 2002 |
| 31.3 | PNM | Chief Executive Officer Certification Pursuant to Section 302 of the Sarbanes-Oxley Act of 2002 |
| 31.4 | PNM | Chief Financial Officer Certification Pursuant to Section 302 of the Sarbanes-Oxley Act of 2002 |
| 31.5 | TNMP | Chief Executive Officer Certification Pursuant to Section 302 of the Sarbanes-Oxley Act of 2002 |
| 31.6 | TNMP | Chief Financial Officer Certification Pursuant to Section 302 of the Sarbanes-Oxley Act of 2002 |
| 32.1 | TXNM | Chief Executive Officer and Chief Financial Officer Certification Pursuant to Section 906 of the Sarbanes-Oxley Act of 2002 |
| 32.2 | PNM | Chief Executive Officer and Chief Financial Officer Certification Pursuant to Section 906 of the Sarbanes-Oxley Act of 2002 |
| 32.3 | TNMP | Chief Executive Officer and Chief Financial Officer Certification Pursuant to Section 906 of the Sarbanes-Oxley Act of 2002 |
| 101.INS | TXNM, PNM, and TNMP | XBRL Instance Document - The instance document does not appear in the interactive data file because XBRL tags are embedded within the Inline XBRL document |
| 101.SCH | TXNM, PNM, and TNMP | Inline XBRL Taxonomy Extension Schema Document |
| 101.CAL | TXNM, PNM, and TNMP | Inline XBRL Taxonomy Extension Calculation Linkbase Document |
| 101.DEF | TXNM, PNM, and TNMP | Inline XBRL Taxonomy Extension Definition Linkbase Document |
| 101.LAB | TXNM, PNM, and TNMP | Inline XBRL Taxonomy Extension Label Linkbase Document |
| 101.PRE | TXNM, PNM, and TNMP | Inline XBRL Taxonomy Extension Presentation Linkbase Document |
| 104 | TXNM, PNM, and TNMP | Cover Page Inline XBRL File (included in Exhibits 101) |

Table of Contents

**SIGNATURE**

Pursuant to the requirements of the Securities Exchange Act of 1934, the registrants have duly caused this report to be signed on their behalf by the undersigned thereunto duly authorized.

**TXNM ENERGY, INC.**
**PUBLIC SERVICE COMPANY OF NEW MEXICO**
**TEXAS-NEW MEXICO POWER COMPANY**

(Registrants)

Date: May 9, 2025

/s/ Gerald R. Bischoff
Gerald R. Bischoff
Vice President and Corporate Controller
(Officer duly authorized to sign this report)

Exhibit 10.3

**TXNM ENERGY, INC.**
**2025 OFFICER ANNUAL INCENTIVE PLAN**

**Introduction**

TXNM Energy, Inc. (the "Company" or "TXNM") has adopted this 2025 Officer Annual Incentive Plan (the "Plan") for the purpose of providing annual cash-based incentive awards (each an "Award") to eligible Officers (as defined below).

Capitalized terms that are used, but not defined, in this Plan document shall have the meanings given to them in the TXNM Energy, Inc. 2023 Performance Equity Plan (the "PEP"), as amended.

**Eligibility**

All Officers of the Company are eligible to participate in the Plan. For purposes of the Plan, the term "Officer" means any employee who: (1) has the title of Chief Executive Officer, President, Senior Vice President, Vice President or higher; and (2) who is in salary grade H18 or higher.

**Award Determinations in General**

Awards are based on: (1) the Incentive Earnings Per Share ("Incentive EPS") levels (as described below and as set forth in Table 1 of Attachment A) for the Performance Period; (2) the weighting between Corporate and Business Area Goals (as set forth in Table 2 of Attachment A); and (3) Award levels (as set forth in Table 3 of Attachment A) achieved during the Performance Period. For purposes of the Plan, the "Performance Period" means the period beginning on January 1, 2025 and ending on December 31, 2025.

An Officer's Award will equal the Officer's share of the Incentive EPS Award Pool as described below. If, however, the Officer's share of the appropriate Performance Award Pool as described below is less than the Officer's share of the Incentive EPS Award Pool, the Officer will receive the smaller amount.

An Officer's share of the Incentive EPS Award Pool or the Performance Award Pool (each, an "Award Pool"), as applicable, will be based upon the amount potentially payable to the Officer for the attained level of performance (Threshold, Target or Maximum, as determined in accordance with Table 3 of Attachment A), as compared to the aggregate amounts potentially payable for the attained level of performance to all of the Officers who are entitled to share in that Award Pool. In determining the amount potentially payable to an Officer, the Officer's base salary will be determined as of December 31, 2025. In no event will the amount payable to an Officer exceed the indicated percentage of the Officer's base salary for the attained performance level set forth in Table 3 of Attachment A. In addition, in no event will the amount payable to one Officer be increased due to a decrease in the amount payable to any other Officer.

**Incentive EPS Award Pool**

In order for any Awards to be payable to eligible Officers, the Company must achieve the Threshold Incentive EPS level set forth in Table 1 of Attachment A. If the Company does not achieve the Threshold Incentive EPS level (calculated before any charges for amounts due pursuant to this Plan), no Awards are payable under the Plan to any Officer. If the Company achieves the Threshold Incentive EPS level (calculated before any charges for amounts due pursuant to this Plan), but the charges for amounts due pursuant to this Plan reduce the Incentive EPS to an amount below the Threshold Incentive EPS level, the Threshold level Incentive EPS Award Pool shall be reduced by the amount necessary to assure that the Incentive EPS is equal to the Threshold Incentive EPS level, unless the Committee, in the exercise of its discretion concludes that no Awards should be payable.

If the Threshold, Target or Maximum Incentive EPS levels set forth in Table 1 of Attachment A are achieved, the aggregate potential Awards payable to the Officers at that level of performance (*e.g.*, the aggregate level of Awards payable at Threshold, Target or Maximum set forth in Table 3 of Attachment A) will make up the "Incentive EPS Award Pool." If the actual Incentive EPS exceeds the minimum level for a performance level by at least $0.01, but is less than the maximum level for that performance level (*e.g.*, if the actual Incentive EPS exceeds $2.65 but is less than $2.70), the Incentive EPS Award Pool will be increased by using straight-line interpolation between the size of the Incentive EPS Award Pool based on the attained level (*e.g.*, Threshold) and the size of the Incentive EPS Award Pool at the next higher level (*e.g.*, Target). The Committee has the discretion to increase the Incentive EPS Award Pool by a lesser amount than would otherwise apply under straight-line interpolation. The Incentive EPS Award Pool is capped by the aggregate Maximum Awards set forth in Table 3 of Attachment A for all eligible Officers.

**Performance Award Pool**

A Corporate Goals Scorecard and an Officer Business Area Goals Scorecard listing each performance measure established by the Committee will be maintained by the PNMR Services Company Human Resources Department. As set forth in Table 2 of Attachment A, the performance of the Chief Executive Officer and the Senior Officers *(i.e.,* Officers with the title of Senior Vice President or higher) are measured 100% on the Corporate Goals Scorecard. Vice Presidents are measured 60% on the Corporate Goals Scorecard and 40% on the Officer Business Area Goals Scorecard.

The "Performance Award Pool" for each Business Area is the amount that could be paid in the aggregate to the Vice Presidents assigned to that Business Area based on performance alone, determined by using the following multi-step process:

a) Select the scorecard results from the appropriate Corporate Goals Scorecard and Officer Business Area Goals Scorecard;

b) Then multiply each result by the appropriate weighting for the scorecard as set forth in Table 2 of Attachment A;

c) Then multiply the total Vice President salaries for that Business Area by the Target Award Level as set forth in Table 3 of Attachment A;

d) Then multiply the result of each scorecard (Step b), expressed as a percentage of Target, by the aggregate base salaries of the Vice Presidents included in that Business Area (Step c); and

e) Sum the results for the Vice President participants.

The Performance Award Pool for the Chief Executive Officer and the Senior Officers will be constructed by using the same process but will be based solely upon the Corporate Goals Scorecard.

**Award Approval and Payout Timing**

In early 2026, management will review the level of Awards, if any, and will provide the final Awards calculation to the Committee. The Committee will review the level of Awards and the Awards calculation and will approve the Awards for all Officers, other than the Chief Executive Officer. The independent directors of the Board will approve the Chief Executive Officer's Award. To the extent Awards are payable under the Plan, the Company will make the payment on or before March 15, 2026 in a single lump sum cash payment, subject to applicable withholding.

The Committee shall retain the authority to adjust the Incentive EPS Award Pool and the Performance Award Pool, to adjust the level of attainment of the Incentive EPS or Corporate Goals and Officer Business Area Goals Scorecards or to otherwise increase or decrease the amount payable with respect to any Award made pursuant to this Plan.

**Pro-rata Awards for Partial Service Periods**

In certain circumstances (as set forth below and in the above "Award Approval and Payout Timing" section) Officers may or may not be eligible for a pro-rata Award under the Plan.

The following Officers are **not eligible** for any Award, including a pro-rata Award:

– Officers who terminate employment with the Company or an Affiliate on or before the date on which Awards are distributed for the Performance Period for any reason other than death, Impaction, Retirement, or Disability. Officers who terminate employment with the Company or an Affiliate during the Performance Period due to a Qualifying Change in Control Termination may be entitled to receive a special payment pursuant to the TXNM Energy, Inc. Officer Retention Plan in lieu of any payments under this Plan.

– Officers who elect voluntary separation or Retirement in lieu of termination for performance or misconduct.

The following Officers may be eligible for a pro-rata Award:

– Officers who are newly hired during the Performance Period and are employed by the Company or an Affiliate on the day on which Awards are distributed for the Performance Period.

– Employees or Officers who are promoted, transferred or demoted during the Performance Period and are employed by the Company or an Affiliate on the day on which Awards are distributed for the Performance Period. An employee or Officer who is promoted, transferred

or demoted during the Performance Period and subsequently terminates employment due to death, Impaction, Retirement or Disability during the Performance Period will remain eligible for a pro-rata Award.

- Officers who are on leave of absence for any full month(s) during the Performance Period and are employed by the Company or an Affiliate on the day on which Awards are distributed for the Performance Period.
- Officers who terminate employment with the Company or an Affiliate during the Performance Period due to Impaction, Retirement or Disability.
- Officers who die during the Performance Period, in which case the Award will be paid to the spouse of a married Officer or the estate of an unmarried Officer.

If an Officer is eligible for a pro-rata Award under this section, it will be calculated based on the number of days that the Officer was actively employed at each eligibility level during the Performance Period compared to the number of days included in the Performance Period. If an Officer who is eligible for a pro-rata Award is not employed on December 31, 2025, the pro-rata Award for the eligible Officer will be calculated using the Officer's base salary on the date of his termination of employment. Any pro-rata Award to which an Officer becomes eligible pursuant to this paragraph will be paid to the Officer in accordance with the "Award Approval and Payout Timing" section above.

**Provisions for a Change in Control**

If a Change in Control occurs during the Performance Period and the Officer remains employed by the Company or an Affiliate at the end of the Performance Period, the Officer may be entitled to receive an Award for the Performance Period as determined in accordance with the provisions of this Plan.

If the Plan is modified after the occurrence of a Change in Control in a manner that has the effect of reducing the amounts otherwise payable under the Plan, an Officer who remains employed by the Company or an Affiliate at the end of the Performance Period will receive, at a minimum, an Award equal to the Target Award available under this Plan for the Performance Period.

If an Officer terminates employment with the Company or an Affiliate during the Performance Period due to a Qualifying Change in Control Termination, the Officer may be entitled to receive a special payment pursuant to the TXNM Energy, Inc. Officer Retention Plan in lieu of any payments under this Plan.

**Ethics**

The purpose of the Plan is to fairly reward performance achievement. Any Officer who manipulates or attempts to manipulate the Plan for personal gain at the expense of customers, shareholders, other employees or the Company or its Affiliates will be subject to disciplinary action, up to and including termination of employment, and will forfeit and be ineligible to receive any Award under the Plan.

**Continuation of Employment**

This Plan does not confer upon any Officer any right to continue in the employment of the Company or any Affiliate and does not limit the right of the Company or any Affiliate, in its sole discretion, to terminate the employment of any Officer at any time. This Plan also does not limit any right that the Company or any Affiliate has to terminate the employment of any Officer in accordance with any written employment agreement the Company and Officer may have.

**Clawbacks**

All Awards issued under this Plan are subject to potential forfeiture or recovery to the fullest extent called for by the Company's Clawback Policy. By accepting an Award, an Officer consents to the Clawback Policy and agrees to be bound by and comply with the Clawback Policy and to return the full amount required by the Clawback Policy.

**Amendments**

The Committee, in its sole discretion, reserves the right to adjust, amend or suspend the Plan during the Performance Period. The Company's General Counsel is hereby authorized to correct any typographical or similar errors in the Plan and any other documents issued in connection with the Plan.

/s/ Brian G. Iverson
Brian G. Iverson
General Counsel, Senior Vice President Regulatory and Public Policy, and Corporate Secretary

Dated: April 17, 2025

**ATTACHMENT A**

**Incentive EPS Table**
**(Table 1)**

| | Incentive EPS[1] |
|---|---|
| No Award | Less than $2.74 |
| Threshold | Greater than or equal to $2.74 and less than $2.79 |
| Target | Greater than or equal to $2.79 and less than $2.86 |
| Maximum | Greater than or equal to $2.86 |

**Scorecard Weighting Table**
**(Table 2)**

| Scorecard Results | | |
|---|---|---|
| **Scorecard Level** | **Corporate Weighting** | **Officer Business Area Scorecard Weighting** |
| CEO & Senior Officers | 100% | 0% |
| Vice Presidents | 60% | 40% |

[1] Equals TXNM's diluted EPS for the fiscal years ending December 31, 2025 calculated in accordance with Generally Accepted Accounting Principles and reported in the Company's Form 10-K for TXNM adjusted to exclude the following items: (1) mark-to-market impact of economic hedges, (2) regulatory disallowances, (3) net change in unrealized gains and losses on investment securities, (4) gains or losses on reacquired debt, (5) goodwill or other asset impairments, (6) impacts of acquisition and disposition activities, including but not limited to pension expense or income associated with Public Service Company of New Mexico's ("PNM") former gas utility operations, (7) impact of the Company's adoption of an accounting pronouncement or the Company's adoption of a change in accounting pronouncement on or after February 25, 2025, (8) the loss, impairment, or write-up of any deferred tax asset or liability that was earned and recognized in a prior tax year, but that must be revalued in the current year, (9) judgments entered or settlements reached in litigation or other regulatory proceedings, (10) increases or decreases in the liabilities associated with PNM's retired generating stations, including but not limited to expenses incurred in demolition or environmental work of such generating stations, (11) costs associated with process improvement initiatives, (12) expected credit loss allowances or reversals, (13) impact of extraordinary and non-recurring events, and (14) changes to the liabilities associated with mine reclamation costs including but not limited to: (a) changes in the discount rate used to measure those liabilities, (b) an early retirement of generating stations, or (c) actions taken by the New Mexico Public Regulation Commission.

**Award Levels Table**
**(Table 3)**

| Award Levels | Threshold | Target | Maximum |
|---|---|---|---|
| CEO | 57.5% | 115% | 230% |
| President and COO | 45% | 90% | 180% |
| General Counsel, SVP Regulatory and Public Policy | 35% | 70% | 140% |
| SVP and CFO; SVP, Corporate Services | 32.5% | 65% | 130% |
| VP, NM Operations; VP, Human Resources; VP and CIO; and VP, TNMP | 25% | 50% | 100% |
| All other VPs | 22.5% | 45% | 90% |

Exhibit 10.4

**FOURTH AMENDMENT**
**TO THE**
**TXNM ENERGY, INC.**
**2023 LONG-TERM INCENTIVE PLAN**

PNM Resources, Inc. previously adopted the 2023 Long-Term Incentive Plan (the "Plan") pursuant to the PNM Resources, Inc. 2014 Performance Equity Plan. The Plan has been amended on three prior occasions. Effective as of August 2, 2024, PNM Resources, Inc. changed its name to TXNM Energy, Inc. (the "Company") and the Plan has been renamed to the TXNM Energy, Inc. 2023 Long-Term Incentive Plan. By this instrument, the Company desires to amend the Plan as set forth below.

1. This Fourth Amendment shall be effective as of February 25, 2025.

2. The definition of FFO/Debt Ratio as set forth in footnote 4 of Attachment A of the Plan is hereby amended and restated in its entirety to read as follows:

> [4] The FFO/Debt Goal equals PNMR's funds from operations for the fiscal year ending December 31, 2025 divided by PNMR's total debt outstanding (including any long-term leases and unfunded pension plan obligations, excluding any outstanding debt associated with securitization) as of December 31, 2025. Funds from operations are equal to the amount of PNMR's net cash flow from operating activities (as reflected on the Consolidated Statement of Cash Flows) as reported in the Company's Form 10-K for PNMR adjusted by the following items: (1) including amounts attributable to principal payments on imputed debt from long-term leases, (2) excluding changes in PNMR's working capital, including bad debt expense, (3) excluding the impacts of any consolidation required by the Variable Interest Entities accounting rules and regulations, (4) subtracting the amount of capitalized interest, (5) excluding impacts on material changes to the federal and state tax rate, (6) excluding any contributions to the PNMR or TNMP qualified pension plans, (7) excluding cash invested in cloud computing projects that are treated as operating cash flows, (8) excluding impacts of securitization, (9) impact of extraordinary or non-recuring events occurring after February 25, 2025, and (10) excluding impacts of acquisition activities. The calculation is intended to be consistent with Moody's calculation of FFO/Debt (which Moody's refers to as "CFO Pre-WC/Debt") and includes any

other adjustments be consistent with Moody's methodology as of February 27, 2023.

3. This Fourth Amendment amends only the provisions of the Plan as noted above, and those provisions not expressly amended shall be considered in full force and effect. Notwithstanding the foregoing, this Fourth Amendment shall supersede the provisions of the Plan to the extent those provisions are inconsistent with the provisions and intent of this Fourth Amendment.

IN WITNESS WHEREOF, the Company has caused this Fourth Amendment to be executed by its duly authorized representative on this 17th day of April, 2025.

**TXNM ENERGY, INC.**

By: /s/ Brian G. Iverson
Brian G. Iverson
General Counsel, Senior Vice President Regulatory and Public Policy, and Corporate Secretary

Exhibit 10.5

**THIRD AMENDMENT**
**TO THE**
**TXNM ENERGY, INC.**
**2024 LONG-TERM INCENTIVE PLAN**

PNM Resources, Inc. previously adopted the 2024 Long-Term Incentive Plan (the "Plan") pursuant to the PNM Resources, Inc. 2023 Performance Equity Plan (the "PEP"). Effective as of August 2, 2024, PNM Resources, Inc. was renamed as TXNM Energy, Inc. (the "Company"). The PEP was subsequently renamed to the TXNM Energy, Inc. 2023 Performance Equity Plan. The Plan has been amended on two prior occasions. By this instrument, the Company desires to amend the Plan as set forth below.

1. This Third Amendment shall be effective as of February 25, 2025.

2. The definition of FFO/Debt Ratio as set forth in footnote 5 of Attachment A of the Plan is hereby amended and restated in its entirety to read as follows:

> [5] The FFO/Debt Goal equals PNMR's funds from operations for the fiscal year ending December 31, 2026 divided by PNMR's total debt outstanding (including any long-term leases other than battery storage agreements and unfunded pension plan obligations, excluding any outstanding debt associated with securitization) as of December 31, 2026. Funds from operations are equal to the amount of PNMR's net cash flow from operating activities (as reflected on the Consolidated Statement of Cash Flows) as reported in the Company's Form 10-K for PNMR adjusted by the following items: (1) including amounts attributable to principal payments on imputed debt from long-term leases other than battery storage agreements, (2) excluding changes in PNMR's working capital, including bad debt expense, (3) excluding the impacts of any consolidation required by the Variable Interest Entities accounting rules and regulations, (4) subtracting the amount of capitalized interest, (5) excluding impacts on material changes to the federal and state tax rate, (6) excluding any contributions to the PNMR or TNMP qualified pension plans, (7) excluding cash invested in cloud computing projects that are treated as operating cash flows, (8) excluding impacts of securitization, (9) impact of extraordinary or non-recuring events occurring after February 25, 2025, and (10) impacts of acquisition activities. The calculation is intended to be consistent with Moody's calculation of FFO/Debt (which Moody's refers to as "CFO Pre-WC/Debt") and includes any other

adjustments be consistent with Moody's methodology as of March 1, 2024.

3. This Third Amendment amends only the provisions of the Plan as noted above, and those provisions not expressly amended shall be considered in full force and effect. Notwithstanding the foregoing, this Third Amendment shall supersede the provisions of the Plan to the extent those provisions are inconsistent with the provisions and intent of this Third Amendment.

IN WITNESS WHEREOF, the Company has caused this Third Amendment to be executed by its duly authorized representative on this 17th day of April, 2025.

**TXNM ENERGY, INC.**

By: /s/ Brian G. Iverson
Brian G. Iverson
General Counsel, Senior Vice President Regulatory and Public Policy, and Corporate Secretary

Exhibit 10.6

# TXNM ENERGY, INC.
# 2025 LONG-TERM INCENTIVE PLAN

**Introduction**

- The 2025 Long-Term Incentive Plan (the "Plan" or the "2025 Plan") provides eligible Officers of TXNM Energy, Inc. (the "Company" or "TXNM") with the opportunity to earn Performance Share Awards (70% of the total opportunity) and time-vested Restricted Stock Rights Awards (30% of the total opportunity). For purposes of the Plan, "Officer" means any Officer of the Company who: (1) has the title of Chief Executive Officer, President, Senior Vice President, Vice President or higher; and (2) who is in salary grade H18 or higher.
- The number of Performance Shares earned by an Officer for the Performance Period (as described below) will depend on the Officer's position (*e.g.*, Chief Executive Officer, President, Senior Vice President or Vice President), the Officer's base salary and the Company's level of attainment of (1) an Earnings Growth Goal, (2) a Relative TSR Goal and (3) a FFO/Debt Ratio Goal, as described below and in Attachment A.
- The number of time-vested Restricted Stock Rights granted to an Officer for the Performance Period will depend on the Officer's position, the Officer's base salary and the discretion of the Committee.

**Performance Period**

- The Performance Period began on January 1, 2025 and will end on December 31, 2027.

**Performance Goals**

- The number of Performance Shares that an Officer will receive for the Performance Period will depend on the Company's level of attainment of an Earnings Growth Goal, a Relative TSR Goal and a FFO/Debt Ratio Goal.
- These goals and the corresponding Awards are described in the Performance Goal Table (Attachment A).

**Performance Share Award Opportunities**

- The Company's level of attainment (Threshold, Target or Maximum) of the Earnings Growth Goal, Relative TSR Goal and the FFO/Debt Ratio Goal determines the level of the Officer's Performance Share Awards.
- An Officer's Performance Share Award opportunities also will vary depending on the Officer's position and the Officer's base salary, all as determined in accordance with the Performance Share Award Opportunity Table (Attachment B).
- For purposes of determining the number of Performance Shares to which an Officer is entitled at any particular Award level, the value of one Performance Share shall be equal to the Fair Market Value of one share of the Company's Stock on the relevant Grant Date and the Officer's base salary shall equal the Officer's base salary as of the first day of the Performance Period.

**Time-Vested Restricted Stock Rights Award Opportunities**

- The Board approved the grant of time-vested Restricted Stock Rights Awards to Officers on the Grant Date, as defined below.
- An Officer's time-vested Restricted Stock Rights Award will vary depending on the Officer's position and the Officer's base salary, all as determined in accordance with the attached Time-Vested Restricted Stock Rights Award Opportunity Table (Attachment C).
- For purposes of determining the number of time-vested Restricted Stock Rights an Officer is granted, the value of one time-vested Restricted Stock Right shall be equal to the Fair Market Value of one share of the Company's Stock on the Grant Date and the Officer's base salary shall equal the Officer's base salary on the Grant Date.
- As a condition to receiving a time-vested Restricted Stock Rights Award (if any) under this 2025 Plan, a participating Officer acknowledges and agrees that the Officer is not entitled to receive a time-vested Restricted Stock Rights Award pursuant to the Company's 2022 Long-Term Incentive Plan (the "2022 Plan").

**Other Provisions**

- All of the Awards will be made pursuant to the TXNM Energy, Inc. 2023 Performance Equity Plan, as amended (the "PEP") or any successor to the PEP. Any references in the Plan to the PEP shall be deemed to be a reference to the corresponding provisions of any successor to the PEP.
- All of the Awards will be subject to the standard Terms and Conditions attached hereto as Attachment D.
- The Grant Date for the Performance Share Awards and the time-vested Restricted Stock Rights Awards is February 26, 2025.
- A full Performance Share Award will be provided to an Officer upon an Officer's Separation from Service at any time during the Performance Period due to a Qualifying Change in Control Termination. In addition, a prorated Performance Share Award will be provided to an Officer who has a Separation from Service in the second half of the Performance Period (in other words, between July 1, 2026 and December 31, 2027) due to death, Disability, Retirement or Impaction. A prorated Performance Share Award will not be paid to an Officer who incurs a Separation from Service for any of these reasons during the first half of the Performance Period or to an Officer who incurs a Separation from Service for any other reason other than a Qualifying Change in Control Termination prior to the last day of the Performance Period.
- The prorated Performance Share Award will be calculated at the end of the Performance Period based on actual performance during the Performance Period. The proration will be made based on the number of full months of service completed by the Officer during the Performance Period, using the proration rules described in Section 10.1(a)(iv)(2) of the PEP. The prorated Performance Share Award then will be paid at the same time as Awards are paid to other participants in the Plan.
- Upon an Officer's Separation from Service at any time during the Performance Period due to a Qualifying Change in Control Termination, all Performance Shares will vest at the end of the Performance Period, or such earlier time as determined under the terms of the PEP,

based on the level of achievement of the performance goals in accordance with the applicable provisions of the PEP.

- If an individual ceases to be an Officer during a Performance Period but remains employed by the Company or its Affiliates, the Committee may pay a prorated Performance Share Award to the former Officer on such terms and conditions as the Committee deems to be appropriate as long as the individual was an Officer for at least half of the Performance Period. If an individual ceases to be an Officer during the Performance Period and subsequently terminates employment due to death, Disability, Retirement or Impaction, the Committee may pay a prorated Performance Share Award to the former Officer, provided the individual was an Officer for at least half of the Performance Period.
- If an individual becomes an Officer or is promoted to a new Officer position during the Performance Period, the Committee and/or Board may grant a prorated Performance Share Award to the new Officer on such terms and conditions as the Committee deems to be appropriate. Unless otherwise approved by the Committee and/or Board, if an Officer is promoted during the Performance Period and becomes eligible for the Plan at a higher level, the increase will take effect on the first day of the month following the promotion. For example, if a VP is promoted to SVP level on July 15, 2026, the individual will receive performance shares for 19 months at the VP level (January 1, 2025-July 31, 2026) and for 17 months at the SVP level (August 1, 2025-December 31, 2027).
- All Awards issued under this Plan are subject to potential forfeiture or recovery to the fullest extent called for by the Company's Clawback Policy. By accepting an Award, an Officer consents to the Clawback Policy and agrees to be bound by and comply with the Clawback Policy and to return the full amount required by the Clawback Policy. To satisfy any recoupment obligation arising under the Clawback Policy or otherwise under applicable laws, rules, or stock exchange listing standards, among other things, the Officer expressly and explicitly authorizes the Company to issue instructions, on the Officer's behalf, to any brokerage firm or service provider engaged by the Company to hold any shares of Stock or other amounts required pursuant to the Award to re-convey, transfer or otherwise return such shares of Stock and/or other amounts to the Company upon the Company's enforcement of the Clawback Policy.

/s/ Brian G. Iverson
Brian G. Iverson
General Counsel, Senior Vice President Regulatory and Public Policy, and Corporate Secretary

Dated: April 17, 2025

**ATTACHMENT A**
**Performance Goal Table**

| Goal | Threshold Level[1] | Target Level[1] | Maximum Level[1,2] |
|---|---|---|---|
| **Earnings Growth[3]**<br>If the Company's Earnings Growth on the last day of the Performance Period places it in the Threshold, Target or Maximum Level range for the Performance Period, the Officer will be entitled to receive 40% of the Threshold, Target or Maximum Award as determined in accordance with the Performance Share Award Opportunity Table. | At least 4% but less than 8% | At least 8%, but less than 12% | At least 12% |
| **Relative TSR[4]**<br>If the Company's Relative TSR for the Performance Period places it in the Threshold, Target or Maximum Level range shown to the right, the Officer will be entitled to receive 40% of the Threshold, Target or Maximum Award as determined in accordance with the Performance Share Award Opportunity Table. | Greater than or equal to the 35th percentile and less than the 50th percentile | Greater than or equal to the 50th percentile and less than the 90th percentile | Greater than or equal to the 90th percentile |
| **FFO/Debt Ratio[5]**<br>If the Company's FFO/Debt Ratio on the last day of the Performance Period places it in the Threshold, Target or Maximum Level range for the Performance Period, the Officer will be entitled to receive 20% of the Threshold, Target or Maximum Award as determined in accordance with the Performance Share Award Opportunity Table. | At least 13% but less than 14% | At least 14%, but less than 16% | At least 16% |

[1] If the Company's Earnings Growth, Relative TSR or FFO/Debt Ratio falls between two Award levels (*e.g.*, the Threshold Level and the Target Level shown in the Performance Goal Table), the number of Performance Shares to which an Officer is entitled will be interpolated between the two Award levels in accordance with uniform procedures prescribed by the Committee.

[2] In no event will an Officer receive more than the Maximum Award for an Officer of his or her level as listed in the Performance Share Award Opportunity Table.

[3] Earnings Growth, for the Performance Period, will be calculated by measuring the compounded annual growth rate by dividing the Earnings Per Share (as defined below) for the year ended December 31, 2027 by the Midpoint Earnings

Per Share of $2.79 included in 2025 earnings guidance dated February 21, 2025. The resulting earnings growth multiple will then be multiplied to the 1/3 power and subtract 1. The calculation would be as follows: [(2027 Earnings Per Share/$2.79) ^ (1/3)] -1.

Earnings Per Share for the above calculation equals TXNM's diluted EPS for the fiscal year ending December 31, 2027 calculated in accordance with Generally Accepted Accounting Principles and reported in the Company's Form 10-K for TXNM adjusted to exclude the following items: (1) mark-to-market impact of economic hedges, (2) regulatory disallowances, (3) net change in unrealized gains and losses on investment securities, (4) gains or losses on reacquired debt, (5) goodwill or other asset impairments, (6) impacts of acquisition and disposition activities, including but not limited to pension expense or income associated with Public Service Company of New Mexico's ("PNM") former gas utility operations, (7) impact of the Company's adoption of an accounting pronouncement or the Company's adoption of a change in accounting pronouncement on or after February 25, 2025, (8) the loss, impairment, or write-up of any deferred tax asset or liability that was earned and recognized in a prior tax year, but that must be revalued in the current year, (9) judgments entered or settlements reached in litigation or other regulatory proceedings, (10) increases or decreases in the liabilities associated with PNM's retired generating stations, including but not limited to expenses incurred in demolition or environmental work of such generating stations, (11) costs associated with process improvement initiatives, (12) expected credit loss allowances or reversals, (13) impact of extraordinary or non-recurring events, and (14) changes to the liabilities associated with mine reclamation costs including but not limited to: (a) changes in the discount rate used to measure those liabilities, (b) an early retirement of generating stations, or (c) actions taken by the New Mexico Public Regulation Commission.

[4] The “Relative TSR” Goal refers to the Company’s “Total Shareholder Return” for the Performance Period as compared to the “Total Shareholder Return” of the other utilities included in the EEI Index.

For this purpose, the Total Shareholder Return of the Company and the other utilities included in the Index will be determined by adding any dividends paid by the Company (or such other utilities) to the change in value of the Company’s Stock (or the other utilities’ common stock). The change in value shall be measured by comparing the “Beginning Stock Price” and “Ending Stock Price.” The “Beginning Stock Price” is the average closing price of the Company’s Stock (or the common stock of the other utilities) on the 20 trading days immediately preceding the first day of the Performance Period. The “Ending Stock Price” is the average closing price of the Company’s Stock (or the common stock of the other utilities) on the last 20 trading days of the Performance Period.

[5] The FFO/Debt Goal equals TXNM’s funds from operations for the fiscal year ending December 31, 2027 divided by TXNM's total debt outstanding (including any long-term leases other than battery storage agreements and unfunded pension plan obligations, excluding any outstanding debt associated with securitization and the applicable credit for hybrid or equity-linked securities) as of December 31, 2027. Funds from operations are equal to the amount of TXNM's net cash flow from operating activities (as reflected on the Consolidated Statement of Cash Flows) as reported in the Company's Form 10-K for TXNM adjusted by the following items: (1) including amounts attributable to principal payments on imputed debt from long-term leases other than battery storage agreements, (2) excluding changes in TXNM's working capital, (3) excluding impacts on material changes to the federal and state tax rate, (4) excluding any contributions to the PNMR or TNMP qualified pension plans, (5) excluding cash invested in cloud computing projects that are treated as operating cash flows, (6) excluding impacts of securitization and the applicable credit for hybrid or equity-linked securities, (7) impact of extraordinary or non-recurring events, and (8) impacts of acquisition activities. Notwithstanding the above adjustments, the calculation is intended to be consistent with Moody's calculation of FFO/Debt (which Moody's refers to as "CFO Pre-WC/Debt") and includes any other adjustments be consistent with Moody’s methodology as updated from time to time.

**ATTACHMENT B**
**Performance Share Award Opportunity Table**

| Officer Level | Threshold Award | Target Award | Maximum Award |
|---|---|---|---|
| CEO | Performance Shares = 113.75% of base salary | Performance Shares = 227.5% of base salary | Performance Shares = 455% of base salary |
| President and COO | Performance Shares = 78.75% of base salary | Performance Shares = 157.5% of base salary | Performance Shares = 315% of base salary |
| General Counsel, Senior Vice President Regulatory and Public Policy | Performance Shares = 47.25% of base salary | Performance Shares = 94.5% of base salary | Performance Shares = 189% of base salary |
| SVP and CFO | Performance Shares = 29.75% of base salary | Performance Shares = 59.5% of base salary | Performance Shares = 119% of base salary |
| SVP, Corporate Services | Performance Shares = 28% of base salary | Performance Shares = 56% of base salary | Performance Shares = 112% of base salary |
| VP, NM Operations; VP, Human Resources; VP and CIO; and VP, TNMP | Performance Shares = 26.25% of base salary | Performance Shares = 52.5% of base salary | Performance Shares = 105% of base salary |
| All other VPs | Performance Shares = 22.75% of base salary | Performance Shares = 45.5% of base salary | Performance Shares = 91% of base salary |

**ATTACHMENT C**
**Time-Vested Restricted Stock Rights Award Opportunity Table**

| Officer Level | Award |
|---|---|
| CEO | Restricted Stock Rights = 97.5% of base salary |
| President and COO | Restricted Stock Rights = 67.5% of base salary |
| General Counsel, Senior Vice President Regulatory and Public Policy | Restricted Stock Rights = 40.5% of base salary |
| SVP and CFO | Restricted Stock Rights = 25.5% of base salary |
| SVP, Corporate Services | Restricted Stock Rights = 24% of base salary |
| VP, NM Operations; VP, Human Resources; VP and CIO; and VP, TNMP | Restricted Stock Rights = 22.5% of base salary |
| All other VPs | Restricted Stock Rights = 19.5% of base salary |

**ATTACHMENT D**
**2025 LONG-TERM INCENTIVE PLAN**
**TERMS AND CONDITIONS**

TXNM Energy, Inc. (the "Company" or "TXNM") has adopted the TXNM Energy, Inc. 2023 Performance Equity Plan, as amended (the "PEP") or any successor to the PEP. Pursuant to the PEP, the Committee has developed the TXNM Energy, Inc. 2025 Long-Term Incentive Plan (the "Plan" or the "2025 Plan") pursuant to which eligible Officers may receive Performance Share Awards and time-vested Restricted Stock Rights Awards.

All of the Awards granted under the 2025 Plan are made pursuant to the PEP and are subject to the provisions of the PEP. In addition, all of the Awards under the 2025 Plan are made subject to these Terms and Conditions. All of the terms of the PEP are incorporated into this document by reference.

Capitalized terms used in but not otherwise defined in this document shall have the meanings given to them in the PEP. Any references in the Plan to the PEP shall be deemed to be a reference to the corresponding provisions of any successor to the PEP.

1. **Performance Share Awards**.

(a) **Determination of Earnings Growth Goal, Relative TSR Goal and FFO/Debt Ratio Goal**. The Committee will determine the Earnings Growth, Relative TSR and the FFO/Debt Ratio for the Performance Period and the Officer's corresponding Performance Share Award, if any, by March 6, 2028. The Committee then will submit its recommendations to the Board of Directors for review and approval. The Performance Shares to which an Officer is entitled shall become payable at the times described below.

(b) **Separation from Service; Forfeiture**. Unless an Officer qualifies for a full or prorated Award as described in the Plan due to a Qualifying Change in Control Termination or a Separation from Service during the second half of the Performance Period due to death, Disability, Retirement, or Impaction, or as otherwise described in the Plan, the Officer's Award will be forfeited upon the Officer's Separation from Service prior to the end of the Performance Period. If the Company terminates an Officer's employment for Cause during or following the expiration of the Performance Period, all vested and unvested Performance Shares shall be canceled and forfeited immediately, regardless of whether the Officer elects Retirement.

(c) **Form and Timing of Delivery of Stock**. All of the Performance Shares awarded and vested pursuant to the Plan will be paid in Stock on or before March 15 of the calendar year following the calendar year in which the Performance Period ends (in other words, by March 15, 2028). The Performance Shares granted under this Plan are intended to fit within the short-term deferral exception to Section 409A of the Code. If the Company determines that the Performance Shares do not qualify for the short-term deferral exception to Section 409A, the restrictions described in Section 17.3 of the PEP will apply to the Performance Shares.

2. **Time-Vested Restricted Stock Rights Awards**.

(a) **Vesting**.

(1) Except as set forth below, the time-vested Restricted Stock Rights shall vest in the following manner: (i) 33% of the time-vested Restricted Stock Rights will vest on March 7, 2026; (ii) an additional 34% of the time-vested Restricted Stock Rights will vest on March 7, 2027; and (iii) the final 33% of the time-vested Restricted Stock Rights will vest on March 7, 2028 (each a "Vesting Date").

(2) Upon an Officer's involuntary or voluntary Separation from Service for any reason other than those set forth in Section 2(a)(3), the time-vested Restricted Stock Rights, if not previously vested, shall be canceled and forfeited immediately.

(3) Upon an Officer's Separation from Service due to death, Disability, Retirement, Impaction or a Qualifying Change in Control Termination, any unvested time-vested Restricted Stock Rights shall become 100% vested in accordance with the applicable provisions of the PEP.

(b) **Form and Timing of Delivery of Certificate**. All of the time-vested Restricted Stock Rights awarded pursuant to this Plan will be paid in Stock in accordance with the following provisions:

(1) If any time-vested Restricted Stock Rights vest in accordance with Section 2(a)(1), the Officer will generally receive the Stock payable with respect to such vested time-vested Restricted Stock Rights within 90 days following each Vesting Date and in all cases by December 31 following the applicable Vesting Date.

(2) If any time-vested Restricted Stock Rights vest in accordance with Section 2(a)(3), the Officer will receive the Stock payable with respect to such time-vested Restricted Stock Rights within 90 days following the date of the Officer's Separation from Service, subject to the provisions of Section 17.3 of the PEP.

(3) If the 90-day period during which payments may be made pursuant to Section 2(a)(1) or (3) begins in one calendar year and ends in another, the Officer will receive the Stock in the second calendar year.

(4) All Stock will be awarded in accordance with the requirements of Section 409A of the Code and Section 17.3 of the PEP.

3. **Adjustments**. Neither the existence of the Plan nor the Awards shall affect, in any way, the right or power of the Company to make or authorize: any or all adjustments, recapitalizations, reorganizations, or other changes in the Company's capital structure or its business; or any merger or consolidation of the Company; or any corporate act or proceeding, whether of a similar character or otherwise; all of which, and the resulting adjustments in, or impact on, the Awards are more fully described in Section 4.3 of the PEP.

4. **Dividend Equivalents**. An Officer will not be entitled to receive a dividend equivalent for any of the Performance Shares or time-vested Restricted Stock Rights granted under the Plan.

5. **Withholding**. The Company shall have the power to withhold, or require an Officer to remit to the Company, up to the maximum amount necessary to satisfy federal, state, and local tax withholding requirements in the applicable jurisdiction on any Award under the Plan, all in accordance with the provisions of the PEP.

6. **Securities Law Compliance**. The delivery of the time-vested Restricted Stock Rights or earned Performance Shares may be delayed to the extent necessary to comply with Federal securities laws.

7. **Status of Plan and Administration**. The Plan and these Terms and Conditions shall at all times be subject to the terms and conditions of the PEP and shall in all respects be administered by the Committee in accordance with the terms of and as provided in the PEP. The Committee shall have the sole and complete discretion with respect to the interpretation of the Plan, these Terms and Conditions and the PEP, and all matters reserved to it by the PEP. The decisions of the majority of the Committee shall be final and binding upon an Officer and the Company. In the event of any conflict between the terms and conditions of the Plan or these Terms and Conditions and the PEP, the provisions of the PEP shall control.

8. **Waiver and Modification**. The provisions of the Plan and these Terms and Conditions may not be waived or modified unless such waiver or modification is in writing signed by an authorized representative of the Committee.

9. **Amendment or Suspension**. The Committee, in its sole discretion, reserves the right to adjust, amend or suspend the Plan and these Terms and Conditions during the Performance Period except as otherwise provided in the PEP. The President and Chief Operating Officer or the Company's General Counsel is hereby authorized to correct any typographical or similar errors in the Plan, the Terms and Conditions and any other documents issued in connection with the Plan.

10. **Ethics**. The purpose of the Plan is to fairly reward performance achievement. Any Officer who manipulates or attempts to manipulate the Plan for personal gain at the expense of customers, shareholders, other employees, or the Company or its Affiliates will be subject to disciplinary action, up to and including termination of employment, and will forfeit and be ineligible to receive any Award under the Plan.

Exhibit 10.7

**FOURTH AMENDMENT**
**TO THE**
**PNM RESOURCES, INC.**
**EXECUTIVE CHOICE ACCOUNT PLAN**

Effective as of January 1, 1980, Public Service Company of New Mexico ("PNM") adopted the Amended and Restated Medical Reimbursement Plan of Public Service Company of New Mexico (the "MERP"). Sponsorship of the MERP was subsequently transferred from PNM to PNM Resources, Inc. ("PNM Resources") on November 30, 2002. Effective January 1, 2002, PNM Resources established the Executive Spending Account (the "ESA"). Effective December 1, 2002, PNM Resources merged the MERP with and into the ESA and named the combined program the "PNM Resources, Inc. Executive Spending Account Plan" (the "Plan"). Effective as of February 22, 2018, PNM Resources renamed the Plan to the "Executive Choice Account Plan." The Plan has been amended and restated on a number of occasions, with the most recent restatement being effective as of January 1, 2011. The restated Plan was subsequently amended on three occasions. Effective as of August 2, 2024, PNM Resources changed its name to TXNM Energy, Inc (the "Company"). By this instrument, the Plan is hereby amended to change the name of the Plan and the sponsoring employer to reflect the name change of PNM Resources, Inc. to TXNM Energy, Inc.

1. This Fourth Amendment shall be effective as of January 1, 2025.

2. The name of the Plan is hereby amended to read as follows:

**TXNM ENERGY, INC.**
**EXECUTIVE CHOICE ACCOUNT PLAN**

3. The third paragraph of the Introduction to the Plan is hereby amended and restated in its entirety to read as follows:

> Effective December 1, 2002, PNM Resources merged the MERP with and into the ESA and amended and restated both plans in the form of a combined program known as the "PNM Resources, Inc.

Executive Spending Account Plan." Effective February 22, 2018, the Plan was renamed the PNM Resources, Inc. Executive Choice Account Plan. Effective August 2, 2024, PNM Resources changed its name to TXNM Energy, Inc. ("TXNM Energy"). The name of the Plan shall now be the TXNM Energy, Inc. Employee Choice Account Plan (the "Plan").

4. Article 2 of the Plan (Defined Terms) is hereby amended by restating the Company section in its entirety to read as follows:

| | |
|---|---|
| **Company:** | TXNM Energy, Inc. ("TXNM Energy") and any affiliate that has adopted the Plan with the approval of TXNM Energy. |

5. Article 2 of the Plan (Defined Terms) is hereby amended by restating the Plan section in its entirety to read as follows:

| | |
|---|---|
| **Plan:** | The TXNM Energy, Inc. Executive Choice Account Plan, as set forth in this document. |

6. Article 2 of the Plan (Defined Terms) is hereby amended by restating the Plan Sponsor section in its entirety to read as follows:

| | |
|---|---|
| **Plan Sponsor:** | TXNM Energy, Inc. |

7. Article 3 of the Plan (General Information About the Plan) is hereby amended by restating the Plan Name section in its entirety to read as follows:

| | |
|---|---|
| **Plan Name:** | TXNM Energy, Inc. Executive Choice Account Plan. |

8. Article 3 of the Plan (General Information About the Plan) is hereby amended by restating the Plan Sponsor section in its entirety to read as follows:

| | |
|---|---|
| **Plan Sponsor:** | TXNM Energy, Inc.<br>414 Silver SW, MS 0755<br>Albuquerque, NM 87102<br>(505) 241-2700 |

9. Article 3 of the Plan (General Information About the Plan) is hereby amended by restating the first paragraph of the Plan Administrator & Named Fiduciary section in its entirety to read as follows:

| | |
|---|---|
| **Plan Administrator & Named Fiduciary:** | TXNM Energy, Inc.<br>414 Silver SW, MS 0755<br>Albuquerque, NM 87102<br>(505) 241-2700<br>Attention: Benefits Governance Committee |

10. Article 3 of the Plan (General Information About the Plan) is hereby amended by restating the Agent for Service of Legal Process section in its entirety to read as follows:

| | |
|---|---|
| **Agent for Service of Legal Process:** | Senior Vice President and General Counsel<br>TXNM Energy, Inc.<br>414 Silver SW, MS 0755<br>Albuquerque, NM 87102<br>(505) 241-2700 |

11. Article 8 of the Plan (Amendment or Termination of the Plan) is hereby amended and restated in its entirety to read as follows:

> TXNM Energy, as Plan Sponsor, has the right to amend or terminate the Plan at any time. The Plan may be amended or terminated by a written instrument duly adopted by TXNM Energy or any of its delegates.

12. The purpose of this Fourth Amendment is to change the name of the Plan and the name of the sponsoring employer. All references to "PNM Resources, Inc." are hereby replaced with references to "TXNM Energy, Inc." unless the context (such as discussion of the formation of the Plan) indicates otherwise. Any other provisions of the Plan which are inconsistent with this name change are hereby amended to the extent necessary to complete the name change. Regardless of the name change, any individuals or entities serving as fiduciaries or service providers with respect to the Plan shall continue to serve as such, subject to the provisions of the Plan. Similarly,

any policies or procedures previously adopted by the fiduciaries shall continue in full force and effect.

13. This Fourth Amendment shall only amend the provisions of the Plan referred to above, and those provisions not amended hereby shall be considered in full force and effect.

IN WITNESS WHEREOF, the Company has caused this Fourth Amendment to be executed as of this 17th day of April, 2025.

**TXNM ENERGY, INC.**

By: /s/ Brian G. Iverson
Brian G. Iverson
General Counsel, Senior Vice President Regulatory and Public Policy, and Corporate Secretary

Exhibit 10.8

**SECOND AMENDMENT**
**TO THE**
**PNM RESOURCES, INC.**
**NON-UNION SEVERANCE PAY PLAN**

Effective January 1, 2002, Public Service Company of New Mexico ("PNM") adopted the Public Service Company of New Mexico Benefits My Way Plan (the "BMW Plan"), which included a number of component programs including Program 12, Non-Union Severance Pay Program (the "Non-Union Severance Program"). Effective as of November 27, 2002, sponsorship of the Plan was transferred from PNM to PNM Resources, Inc. The BMW Plan was subsequently amended to divide it into a number of separate plans, including the PNM Resources, Inc. Non-Union Severance Pay Plan (the "Plan"). The Plan has been amended or restated on a number of occasions, with the most recent restatement being effective December 1, 2021. The restated Plan has been amended on one previous occasion. Effective August 2, 2024, PNM Resources, Inc. changed its name to TXNM Energy, Inc. (the "Company"). By this instrument, the Plan is hereby amended to change the name of the Plan and the sponsoring employer to reflect the name change of PNM Resources, Inc. to TXNM Energy, Inc.

1. This Second Amendment shall be effective as of January 1, 2025.

2. The name of the Plan is hereby amended to read as follows:

   **TXNM ENERGY, INC. NON-UNION SEVERANCE PAY PLAN**

3. The second paragraph of the Introduction to the Plan is hereby amended and by the addition of the following new sentences to the end thereof to read as follows:

> Effective August 2, 2024, PNM Resources changed its name to TXNM Energy, Inc. ("TXNM Energy") and the name of the Plan shall now be the TXNM Energy, Inc. Non-Union Severance Pay Plan (the "Plan").

4. Section 2.1(d) of the Plan (Definitions – "Board") is hereby amended and restated in its entirety to read as follows:

(d) **"Board"** means the Board of Directors of TXNM Energy.

5. Section 2.1(h) of the Plan (Definitions – "Company") is hereby amended and restated in its entirety to read as follows:

(h) **"Company"** means, collectively, TXNM Energy or any Affiliate of TXNM Energy that is authorized by the Board to adopt the Plan and which has adopted the Plan pursuant to Article IX (Adoption by Affiliates).

6. Section 2.1(u) of the Plan (Definitions – "Plan") is hereby amended and restated in its entirety to read as follows:

(u) **"Plan"** means the TXNM Energy, Inc. Non-Union Severance Pay Plan, as set forth in this document and as it may be amended from time to time.

7. Section 2.1(w) of the Plan (Definitions – "PNM Resources") is hereby amended and restated in its entirety to read as follows:

(w) **"TXNM Energy"** means TXNM Energy, Inc. As used in the Plan, "TXNM Energy" also means any successor in interest to TXNM Energy resulting from merger, consolidation, or transfer of substantially all of TXNM Energy's assets.

8. The purpose of this Second Amendment is to change the name of the Plan and the name of the sponsoring employer. All references to "PNM Resources, Inc." are hereby replaced with references to "TXNM Energy, Inc." unless the context (such as discussion of the formation of the Plan) indicates otherwise. Any other provisions of the Plan which are inconsistent with this name change are hereby amended to the extent necessary to complete the name change. Regardless of the name change, any individuals or entities serving as fiduciaries or service providers with respect to the Plan shall continue to serve as such, subject to the provisions of the Plan. Similarly,

any policies or procedures previously adopted by the fiduciaries shall continue in full force and effect.

9. This Second Amendment shall only amend the provisions of the Plan referred to above, and those provisions not amended hereby shall be considered in full force and effect.

IN WITNESS WHEREOF, the Company has caused this Second Amendment to be executed as of this 17th day of April, 2025.

**TXNM ENERGY, INC.**

By: /s/ Brian G. Iverson
Brian G. Iverson
General Counsel, Senior Vice President Regulatory and Public Policy, and Corporate Secretary

Exhibit 10.9

**FIRST AMENDMENT**
**TO THE**
**PNM RESOURCES, INC.**
**OFFICER RETENTION PLAN**

Effective as of July 13, 2003, PNM Resources, Inc. adopted the PNM Resources, Inc. Officer Retention Plan (the "Plan"). The Plan has been amended or restated on a number of occasions and was most recently amended and restated effective October 20, 2020. Effective as of August 2, 2024, PNM Resources, Inc. changed its name to TXNM Energy, Inc. (the "Company"). By this instrument, the Plan is hereby amended to change the name of the Plan and the sponsoring employer to reflect the name change of PNM Resources, Inc. to TXNM Energy, Inc.

1. This First Amendment shall be effective as of January 1, 2025.

2. The name of the Plan is hereby amended to read as follows:

   **TXNM ENERGY, INC. OFFICER RETENTION PLAN**

3. The first paragraph of the Introduction to the Plan is hereby amended and restated in its entirety to read as follows:

   Effective December 7, 1998, Public Service Company of New Mexico adopted the Public Service Company of New Mexico First Restated and Amended Executive Retention Plan. By an amendment dated November 27, 2002, sponsorship of the Plan was transferred to PNM Resources, Inc. ("PNM Resources") and the Plan was renamed the "PNM Resources, Inc. First Restated and Amended Executive Retention Plan." Effective as of July 13, 2003, PNM Resources amended and restated the Plan in its entirety and changed the name of the Plan to the "PNM Resources, Inc. Officer Retention Plan." The Plan was most recently amended and restated effective as of October 20, 2020. As of August 2, 2024, PNM Resources, Inc. changed its name to TXNM Energy, Inc. ("TXNM Energy") and the name of the Plan shall now be the TXNM Energy, Inc. Officer Retention Plan (the "Plan").

4. Section (h) of the Glossary to the Plan ("Board" or "Board of Directors") is hereby amended and restated in its entirety to read as follows:

(h) "**Board**" or "**Board of Directors**" means the Board of Directors of TXNM Energy. The Board may delegate its responsibilities in accordance with its standard practices and procedures.

5. Section (m) of the Glossary to the Plan ("Company") is hereby amended and restated in its entirety to read as follows:

(m) "**Company**" means, collectively, TXNM Energy and any Affiliate of TXNM Energy that has adopted this Plan in accordance with Section 10.12 (Adoption by Affiliates). As used in this Plan, "Company" also means any successor to the assets of TXNM Energy that assumes and agrees to perform TXNM Energy's obligations hereunder, by operation of law or otherwise.

6. Section (v) of the Glossary to the Plan ("Officer") is hereby amended and restated in its entirety to read as follows:

(v) "**Officer**" means any officer of TXNM Energy (1) with the title Chief Executive Officer (CEO), Chief Operating Officer (COO), Executive Vice President (EVP), Senior Vice President (SVP), or Vice President (VP) or any other title that describes a position of higher authority than that of a Vice President, and (2) who is classified and coded as an Officer pursuant to TXNM Energy's compensation system.

7. Section (y) of the Glossary to the Plan ("Plan") is hereby amended and restated in its entirety to read as follows:

(y) "**Plan**" means the TXNM Energy, Inc. Officer Retention Plan, as amended.

8. Section (z) of the Glossary to the Plan ("PNM Resources") is hereby amended and restated in its entirety to read as follows:

(z) **"TXNM Energy"** means TXNM Energy, Inc. As used in the Plan, "TXNM Energy" also means any successor in interest resulting from merger, consolidation, or transfer of substantially all of TXNM Energy's assets.

9. The purpose of this First Amendment is to change the name of the Plan and the name of the sponsoring employer. All references to "PNM Resources, Inc." are hereby replaced with references to "TXNM Energy, Inc." unless the context (such as discussion of the formation of the Plan) indicates otherwise. Any other provisions of the Plan which are inconsistent with this name change are hereby amended to the extent necessary to complete the name change. Regardless of the name change, any individuals or entities serving as fiduciaries or service providers with respect to the Plan shall continue to serve as such, subject to the provisions of the Plan. Similarly, any policies or procedures previously adopted by the fiduciaries shall continue in full force and effect.

10. This First Amendment shall only amend the provisions of the Plan referred to above, and those provisions not amended hereby shall be considered in full force and effect.

IN WITNESS WHEREOF, the Company has caused this First Amendment to be executed as of this 17th day of April, 2025.

**TXNM ENERGY, INC.**

By: /s/ Brian G. Iverson
Brian G. Iverson
General Counsel, Senior Vice President Regulatory and Public Policy, and Corporate Secretary

TXNM Energy, Inc.
414 Silver Ave. SW
Albuquerque, NM 87102-3289

**EXHIBIT 31.1**
**CERTIFICATION**

I, Patricia K. Collawn, certify that:

1. I have reviewed this Quarterly Report on Form 10-Q of TXNM Energy, Inc.;

2. Based on my knowledge, this report does not contain any untrue statement of a material fact or omit to state a material fact necessary to make the statements made, in light of the circumstances under which such statements were made, not misleading with respect to the period covered by this report;

3. Based on my knowledge, the financial statements, and other financial information included in this report, fairly present in all material respects the financial condition, results of operations and cash flows of the registrant as of, and for, the periods presented in this report;

4. The registrant's other certifying officer and I are responsible for establishing and maintaining disclosure controls and procedures (as defined in Exchange Act Rules 13a-15(e) and 15d-15(e)) and internal control over financial reporting (as defined in Exchange Act Rules 13a-15(f) and 15d-15(f)) for the registrant and have:

    a) Designed such disclosure controls and procedures, or caused such disclosure controls and procedures to be designed under our supervision, to ensure that material information relating to the registrant, including its consolidated subsidiaries, is made known to us by others within those entities, particularly during the period in which this report is being prepared;

    b) Designed such internal control over financial reporting, or caused such internal control over financial reporting to be designed under our supervision, to provide reasonable assurance regarding the reliability of financial reporting and the preparation of financial statements for external purposes in accordance with generally accepted accounting principles;

    c) Evaluated the effectiveness of the registrant's disclosure controls and procedures and presented in this report our conclusions about the effectiveness of the disclosure controls and procedures, as of the end of the period covered by this report based on such evaluation; and

    d) Disclosed in this report any change in the registrant's internal control over financial reporting that occurred during the registrant's most recent fiscal quarter (each registrant's fourth fiscal quarter in the case of an annual report) that has materially affected, or is reasonably likely to materially affect, the registrant's internal control over financial reporting; and

5. The registrant's other certifying officer and I have disclosed, based on our most recent evaluation of internal control over financial reporting, to the registrant's auditors and the audit committee of the registrant's board of directors (or persons performing the equivalent functions):

    a) All significant deficiencies and material weaknesses in the design or operation of internal controls over financial reporting which are reasonably likely to adversely affect the registrant's ability to record, process, summarize and report financial information; and

    b) Any fraud, whether or not material, that involves management or other employees who have a significant role in the registrant's internal control over financial reporting.

Date: May 9, 2025

By: /s/ Patricia K. Collawn
Patricia K. Collawn
Chairman and Chief Executive Officer
TXNM Energy, Inc.

TXNM Energy, Inc.
414 Silver Ave. SW
Albuquerque, NM 87102-3289

**EXHIBIT 31.2**
**CERTIFICATION**

I, Elisabeth A. Eden, certify that:

1. I have reviewed this Quarterly Report on Form 10-Q of TXNM Energy, Inc.;

2. Based on my knowledge, this report does not contain any untrue statement of a material fact or omit to state a material fact necessary to make the statements made, in light of the circumstances under which such statements were made, not misleading with respect to the period covered by this report;

3. Based on my knowledge, the financial statements, and other financial information included in this report, fairly present in all material respects the financial condition, results of operations and cash flows of the registrant as of, and for, the periods presented in this report;

4. The registrant's other certifying officer and I are responsible for establishing and maintaining disclosure controls and procedures (as defined in Exchange Act Rules 13a-15(e) and 15d-15(e)) and internal control over financial reporting (as defined in Exchange Act Rules 13a-15(f) and 15d-15(f)) for the registrant and have:

    a) Designed such disclosure controls and procedures, or caused such disclosure controls and procedures to be designed under our supervision, to ensure that material information relating to the registrant, including its consolidated subsidiaries, is made known to us by others within those entities, particularly during the period in which this report is being prepared;

    b) Designed such internal control over financial reporting, or caused such internal control over financial reporting to be designed under our supervision, to provide reasonable assurance regarding the reliability of financial reporting and the preparation of financial statements for external purposes in accordance with generally accepted accounting principles;

    c) Evaluated the effectiveness of the registrant's disclosure controls and procedures and presented in this report our conclusions about the effectiveness of the disclosure controls and procedures, as of the end of the period covered by this report based on such evaluation; and

    d) Disclosed in this report any change in the registrant's internal control over financial reporting that occurred during the registrant's most recent fiscal quarter (each registrant's fourth fiscal quarter in the case of an annual report) that has materially affected, or is reasonably likely to materially affect, the registrant's internal control over financial reporting; and

5. The registrant's other certifying officer and I have disclosed, based on our most recent evaluation of internal control over financial reporting, to the registrant's auditors and the audit committee of the registrant's board of directors (or persons performing the equivalent functions):

    a) All significant deficiencies and material weaknesses in the design or operation of internal controls over financial reporting which are reasonably likely to adversely affect the registrant's ability to record, process, summarize and report financial information; and

    b) Any fraud, whether or not material, that involves management or other employees who have a significant role in the registrant's internal control over financial reporting.

Date: May 9, 2025

By: /s/ Elisabeth A. Eden
Elisabeth A. Eden
Senior Vice President and Chief Financial Officer
TXNM Energy, Inc.

Public Service Company of New Mexico
414 Silver Ave. SW
Albuquerque, NM 87102-3289

**EXHIBIT 31.3**
**CERTIFICATION**

I, Joseph D. Tarry, certify that:

1. I have reviewed this Quarterly Report on Form 10-Q of Public Service Company of New Mexico;

2. Based on my knowledge, this report does not contain any untrue statement of a material fact or omit to state a material fact necessary to make the statements made, in light of the circumstances under which such statements were made, not misleading with respect to the period covered by this report;

3. Based on my knowledge, the financial statements, and other financial information included in this report, fairly present in all material respects the financial condition, results of operations and cash flows of the registrant as of, and for, the periods presented in this report;

4. The registrant's other certifying officer and I are responsible for establishing and maintaining disclosure controls and procedures (as defined in Exchange Act Rules 13a-15(e) and 15d-15(e)) and internal control over financial reporting (as defined in Exchange Act Rules 13a-15(f) and 15d-15(f)) for the registrant and have:

    a) Designed such disclosure controls and procedures, or caused such disclosure controls and procedures to be designed under our supervision, to ensure that material information relating to the registrant, including its consolidated subsidiaries, is made known to us by others within those entities, particularly during the period in which this report is being prepared;

    b) Designed such internal control over financial reporting, or caused such internal control over financial reporting to be designed under our supervision, to provide reasonable assurance regarding the reliability of financial reporting and the preparation of financial statements for external purposes in accordance with generally accepted accounting principles;

    c) Evaluated the effectiveness of the registrant's disclosure controls and procedures and presented in this report our conclusions about the effectiveness of the disclosure controls and procedures, as of the end of the period covered by this report based on such evaluation; and

    d) Disclosed in this report any change in the registrant's internal control over financial reporting that occurred during the registrant's most recent fiscal quarter (each registrant's fourth fiscal quarter in the case of an annual report) that has materially affected, or is reasonably likely to materially affect, the registrant's internal control over financial reporting; and

5. The registrant's other certifying officer and I have disclosed, based on our most recent evaluation of internal control over financial reporting, to the registrant's auditors and the audit committee of the registrant's board of directors (or persons performing the equivalent functions):

    a) All significant deficiencies and material weaknesses in the design or operation of internal controls over financial reporting which are reasonably likely to adversely affect the registrant's ability to record, process, summarize and report financial information; and

    b) Any fraud, whether or not material, that involves management or other employees who have a significant role in the registrant's internal control over financial reporting.

Date: May 9, 2025

By: /s/ Joseph D. Tarry

Joseph D. Tarry
President and Chief Executive Officer
Public Service Company of New Mexico

Public Service Company of New Mexico
414 Silver Ave. SW
Albuquerque, NM 87102-3289

**EXHIBIT 31.4**
**CERTIFICATION**

I, Elisabeth A. Eden, certify that:

1. I have reviewed this Quarterly Report on Form 10-Q of Public Service Company of New Mexico;

2. Based on my knowledge, this report does not contain any untrue statement of a material fact or omit to state a material fact necessary to make the statements made, in light of the circumstances under which such statements were made, not misleading with respect to the period covered by this report;

3. Based on my knowledge, the financial statements, and other financial information included in this report, fairly present in all material respects the financial condition, results of operations and cash flows of the registrant as of, and for, the periods presented in this report;

4. The registrant's other certifying officer and I are responsible for establishing and maintaining disclosure controls and procedures (as defined in Exchange Act Rules 13a-15(e) and 15d-15(e)) and internal control over financial reporting (as defined in Exchange Act Rules 13a-15(f) and 15d-15(f)) for the registrant and have:

    a) Designed such disclosure controls and procedures, or caused such disclosure controls and procedures to be designed under our supervision, to ensure that material information relating to the registrant, including its consolidated subsidiaries, is made known to us by others within those entities, particularly during the period in which this report is being prepared;

    b) Designed such internal control over financial reporting, or caused such internal control over financial reporting to be designed under our supervision, to provide reasonable assurance regarding the reliability of financial reporting and the preparation of financial statements for external purposes in accordance with generally accepted accounting principles;

    c) Evaluated the effectiveness of the registrant's disclosure controls and procedures and presented in this report our conclusions about the effectiveness of the disclosure controls and procedures, as of the end of the period covered by this report based on such evaluation; and

    d) Disclosed in this report any change in the registrant's internal control over financial reporting that occurred during the registrant's most recent fiscal quarter (each registrant's fourth fiscal quarter in the case of an annual report) that has materially affected, or is reasonably likely to materially affect, the registrant's internal control over financial reporting; and

5. The registrant's other certifying officer and I have disclosed, based on our most recent evaluation of internal control over financial reporting, to the registrant's auditors and the audit committee of the registrant's board of directors (or persons performing the equivalent functions):

    a) All significant deficiencies and material weaknesses in the design or operation of internal controls over financial reporting which are reasonably likely to adversely affect the registrant's ability to record, process, summarize and report financial information; and

    b) Any fraud, whether or not material, that involves management or other employees who have a significant role in the registrant's internal control over financial reporting.

Date: May 9, 2025

By: /s/ Elisabeth A. Eden
Elisabeth A. Eden
Senior Vice President and Chief Financial Officer

Public Service Company of New Mexico

Texas-New Mexico Power Company
577 N. Garden Ridge Blvd.
Lewisville, Texas 75067

**EXHIBIT 31.5**
**CERTIFICATION**

I, Joseph D. Tarry, certify that:

1. I have reviewed this Quarterly Report on Form 10-Q of Texas-New Mexico Power Company;

2. Based on my knowledge, this report does not contain any untrue statement of a material fact or omit to state a material fact necessary to make the statements made, in light of the circumstances under which such statements were made, not misleading with respect to the period covered by this report;

3. Based on my knowledge, the financial statements, and other financial information included in this report, fairly present in all material respects the financial condition, results of operations and cash flows of the registrant as of, and for, the periods presented in this report;

4. The registrant's other certifying officer and I are responsible for establishing and maintaining disclosure controls and procedures (as defined in Exchange Act Rules 13a-15(e) and 15d-15(e)) and internal control over financial reporting (as defined in Exchange Act Rules 13a-15(f) and 15d-15(f)) for the registrant and have:

    a) Designed such disclosure controls and procedures, or caused such disclosure controls and procedures to be designed under our supervision, to ensure that material information relating to the registrant, including its consolidated subsidiaries, is made known to us by others within those entities, particularly during the period in which this report is being prepared;

    b) Designed such internal control over financial reporting, or caused such internal control over financial reporting to be designed under our supervision, to provide reasonable assurance regarding the reliability of financial reporting and the preparation of financial statements for external purposes in accordance with generally accepted accounting principles;

    c) Evaluated the effectiveness of the registrant's disclosure controls and procedures and presented in this report our conclusions about the effectiveness of the disclosure controls and procedures, as of the end of the period covered by this report based on such evaluation; and

    d) Disclosed in this report any change in the registrant's internal control over financial reporting that occurred during the registrant's most recent fiscal quarter (each registrant's fourth fiscal quarter in the case of an annual report) that has materially affected, or is reasonably likely to materially affect, the registrant's internal control over financial reporting; and

5. The registrant's other certifying officer and I have disclosed, based on our most recent evaluation of internal control over financial reporting, to the registrant's auditors and the audit committee of the registrant's board of directors (or persons performing the equivalent functions):

    a) All significant deficiencies and material weaknesses in the design or operation of internal controls over financial reporting which are reasonably likely to adversely affect the registrant's ability to record, process, summarize and report financial information; and

    b) Any fraud, whether or not material, that involves management or other employees who have a significant role in the registrant's internal control over financial reporting.

Date: May 9, 2025

By: /s/ Joseph D. Tarry

Joseph D. Tarry
Chief Executive Officer
Texas-New Mexico Power Company

Texas-New Mexico Power Company
577 N. Garden Ridge Blvd.
Lewisville, Texas 75067

**EXHIBIT 31.6**
**CERTIFICATION**

I, Elisabeth A. Eden, certify that:

1. I have reviewed this Quarterly Report on Form 10-Q of Texas-New Mexico Power Company;

2. Based on my knowledge, this report does not contain any untrue statement of a material fact or omit to state a material fact necessary to make the statements made, in light of the circumstances under which such statements were made, not misleading with respect to the period covered by this report;

3. Based on my knowledge, the financial statements, and other financial information included in this report, fairly present in all material respects the financial condition, results of operations and cash flows of the registrant as of, and for, the periods presented in this report;

4. The registrant's other certifying officer and I are responsible for establishing and maintaining disclosure controls and procedures (as defined in Exchange Act Rules 13a-15(e) and 15d-15(e)) and internal control over financial reporting (as defined in Exchange Act Rules 13a-15(f) and 15d-15(f)) for the registrant and have:

    a) Designed such disclosure controls and procedures, or caused such disclosure controls and procedures to be designed under our supervision, to ensure that material information relating to the registrant, including its consolidated subsidiaries, is made known to us by others within those entities, particularly during the period in which this report is being prepared;

    b) Designed such internal control over financial reporting, or caused such internal control over financial reporting to be designed under our supervision, to provide reasonable assurance regarding the reliability of financial reporting and the preparation of financial statements for external purposes in accordance with generally accepted accounting principles;

    c) Evaluated the effectiveness of the registrant's disclosure controls and procedures and presented in this report our conclusions about the effectiveness of the disclosure controls and procedures, as of the end of the period covered by this report based on such evaluation; and

    d) Disclosed in this report any change in the registrant's internal control over financial reporting that occurred during the registrant's most recent fiscal quarter (each registrant's fourth fiscal quarter in the case of an annual report) that has materially affected, or is reasonably likely to materially affect, the registrant's internal control over financial reporting; and

5. The registrant's other certifying officer and I have disclosed, based on our most recent evaluation of internal control over financial reporting, to the registrant's auditors and the audit committee of the registrant's board of directors (or persons performing the equivalent functions):

    a) All significant deficiencies and material weaknesses in the design or operation of internal controls over financial reporting which are reasonably likely to adversely affect the registrant's ability to record, process, summarize and report financial information; and

    b) Any fraud, whether or not material, that involves management or other employees who have a significant role in the registrant's internal control over financial reporting.

Date: May 9, 2025

By: /s/ Elisabeth A. Eden
Elisabeth A. Eden
Senior Vice President and Chief Financial Officer
Texas-New Mexico Power Company

TXNM Energy, Inc.
414 Silver Ave. SW
Albuquerque, NM 87102-3289
www.txnmenergy.com

**EXHIBIT 32.1**

**CERTIFICATION PURSUANT TO 18 U.S.C. § 1350, AS ADOPTED PURSUANT TO § 906 OF THE SARBANES-OXLEY ACT OF 2002**

In connection with the Quarterly Report on Form 10-Q for the period ended March 31, 2025, for TXNM Energy, Inc. ("Company"), as filed with the Securities and Exchange Commission on May 9, 2025 ("Report"), each of the undersigned officers of the Company certifies, pursuant to 18 U.S.C. §1350, as adopted pursuant to § 906 of the Sarbanes-Oxley Act of 2002, that:

(1) the Report fully complies with the requirements of § 13(a) or 15(d) of the Securities Exchange Act of 1934, as amended; and
(2) the information contained in the Report fairly presents, in all material respects, the financial condition and results of operations of the Company.

Date: May 9, 2025

By: /s/ Patricia K. Collawn
Patricia K. Collawn
Chairman and Chief Executive Officer
TXNM Energy, Inc.

By: /s/ Elisabeth A. Eden
Elisabeth A. Eden
Senior Vice President and Chief Financial Officer
TXNM Energy, Inc.

Public Service Company of New Mexico
414 Silver Ave. SW
Albuquerque, NM 87102-3289

**EXHIBIT 32.2**

**CERTIFICATION PURSUANT TO 18 U.S.C. § 1350, AS ADOPTED PURSUANT TO § 906 OF THE SARBANES-OXLEY ACT OF 2002**

In connection with the Quarterly Report on Form 10-Q for the period ended March 31, 2025, for Public Service Company of New Mexico ("Company"), as filed with the Securities and Exchange Commission on May 9, 2025 ("Report"), each of the undersigned officers of the Company certifies, pursuant to 18 U.S.C. §1350, as adopted pursuant to § 906 of the Sarbanes-Oxley Act of 2002, that:

(1) the Report fully complies with the requirements of § 13(a) or 15(d) of the Securities Exchange Act of 1934, as amended; and
(2) the information contained in the Report fairly presents, in all material respects, the financial condition and results of operations of the Company.

Date: May 9, 2025

By: /s/ Joseph D. Tarry
Joseph D. Tarry
President and Chief Executive Officer
Public Service Company of New Mexico

By: /s/ Elisabeth A. Eden
Elisabeth A. Eden
Senior Vice President and Chief Financial Officer
Public Service Company of New Mexico

Texas-New Mexico Power Company
577 N. Garden Ridge Blvd.
Lewisville, Texas 75067

**EXHIBIT 32.3**

**CERTIFICATION PURSUANT TO 18 U.S.C. § 1350, AS ADOPTED PURSUANT TO § 906 OF THE SARBANES-OXLEY ACT OF 2002**

In connection with the Quarterly Report on Form 10-Q for the period ended March 31, 2025, for Texas-New Mexico Power Company ("Company"), as filed with the Securities and Exchange Commission on May 9, 2025 ("Report"), each of the undersigned officers of the Company certifies, pursuant to 18 U.S.C. §1350, as adopted pursuant to §906 of the Sarbanes-Oxley Act of 2002, that:

(1) the Report fully complies with the requirements of § 13(a) or 15(d) of the Securities Exchange Act of 1934, as amended; and
(2) the information contained in the Report fairly presents, in all material respects, the financial condition and results of operations of the Company.

Date: May 9, 2025

By: /s/ Joseph D. Tarry
Joseph D. Tarry
Chief Executive Officer
Texas-New Mexico Power Company

By: /s/ Elisabeth A. Eden
Elisabeth A. Eden
Senior Vice President and Chief Financial Officer
Texas-New Mexico Power Company

# PNM Schedule Q-5

Form 1 Reports

**Public Service Company of New Mexico**
**Schedule Q-5: Form 1 Report**

Pursuant to 17.9.530.14.Q.5 NMAC:

"(a) To satisfy the requirements of this schedule the applicant shall submit a copy of the latest Form 1 report required to be on file at the New Mexico Public Service Commission [New Mexico Public Regulation Commission]. Where the applicant has duly filed such report with the New Mexico Public Service Commission [New Mexico Public Regulation Commission], notice herein of the fact will satisfy the requirements of this schedule."

PNM is providing administrative notice that the latest Form 1 was filed with the Commission on April 30, 2026, in lieu of a hard copy as allowed by the requirement cited above.

This schedule is sponsored by PNM Witness Sanders

# PNM Schedule Q-6

Opinion of independent public accountants

KPMG LLP
Suite 3400
312 Walnut Street
Cincinnati, OH 45202

# Independent Accountants' Review Report

The Board of Directors
Public Service Company of New Mexico:

We have reviewed the accompanying balance sheet – regulatory basis of Public Service Company of New Mexico (the Company) as of June 30, 2026, and the related statement of earnings – regulatory basis and statement of cash flows – regulatory basis for the twelve-months then ended, appearing in schedules I-1, I-2, and I-3, respectively, in the Company's 2026 rate filing with the New Mexico Public Regulation Commission (NMPRC). A review includes primarily applying analytical procedures to management's financial data and making inquiries of Company management. A review is substantially less in scope than an audit, the objective of which is the expression of an opinion regarding the regulatory-basis financial statements as a whole. Accordingly, we do not express such an opinion.

## Management's Responsibility for the Regulatory Financial Statements

Management is responsible for the preparation and fair presentation of the regulatory basis financial statements in accordance with the requirements of the Federal Energy Regulatory Commission (FERC) as set forth in its applicable Uniform System of Accounts and published accounting releases for the special purpose of inclusion in the Company's rate filing with the NMPRC, and is not intended to be a presentation in accordance with U.S. generally accepted accounting principles. This includes determining that the FERC requirements are an acceptable basis for the preparation of financial statements under the circumstances. Management is also responsible for the design, implementation, and maintenance of internal control relevant to the preparation and fair presentation of the regulatory basis financial statements that are free from material misstatement, whether due to fraud or error.

## Accountants' Responsibility

Our responsibility is to conduct the review engagement in accordance with Statements on Standards for Accounting and Review Services issued by the American Institute of Certified Public Accountants. Those standards require us to perform procedures to obtain limited assurance as a basis for reporting whether we are aware of any material modifications that should be made to the regulatory basis financial statements for them to be in accordance with the requirements of the FERC as set forth in its applicable Uniform System of Accounts and published accounting releases. We believe that the results of our procedures provide a reasonable basis for our conclusion.

We are required to be independent of the Company and to meet our other ethical responsibilities, in accordance with the relevant ethical requirements related to our review.

## Accountants' Conclusion

Based on our review, we are not aware of any material modifications that should be made to the accompanying regulatory basis financial statements for the special purpose of inclusion in the Company's rate filing with the NMPRC in order for them to be in accordance with the requirements of the FERC as set forth in its applicable Uniform System of Accounts and published accounting releases, which is a comprehensive basis of accounting other than U.S. generally accepted accounting principles.

KPMG LLP, a Delaware limited liability partnership, and its subsidiaries are part of the KPMG global organization of independent member firms affiliated with KPMG International Limited, a private English company limited by guarantee.

**Basis of Accounting**

The accompanying regulatory basis financial statements, for the special purpose of inclusion in the Company's rate filing with the NMPRC, were prepared for the purpose of complying with the requirements of the FERC as set forth in its applicable Uniform System of Accounts and published accounting releases pursuant to Rule 530 of the NMPRC, and are not intended to be a presentation in accordance with U.S. generally accepted accounting principles. Our conclusion is not modified with respect to this matter.

**Accompanying Supplemental Information**

The supplemental regulatory basis schedules summarized below are included in the Company's 2026 rate filing to be filed with the NMPRC on or about November 24, 2026. Such information is the responsibility of management and is derived from the underlying accounting and other records used to prepare the regulatory basis balance sheet and the related statements of earnings and cash flows. The supplemental regulatory basis schedules are prepared on the regulatory basis of accounting and are presented for purposes of additional analysis, and are not required part of the regulatory basis financial statements. The supplemental regulatory basis schedules are not intended to be a complete presentation of the Company's regulatory basis historical book amounts.

The historical book amounts, as of June 30, 2026 and for the twelve-months then ended, included in the supplemental regulatory basis schedules summarized below have been subjected to review procedures performed in conjunction with the review of the Company's regulatory basis balance sheet and the related statements of earnings and cash flows. We are not aware of any material modifications that should be made to the following supplemental regulatory basis schedules included in the Company's 2026 rate filing with the NMPRC in order for them to be in accordance with the requirements of the FERC as set forth in its applicable Uniform System of Accounts and published accounting releases. We have not audited the supplemental regulatory basis schedules and accordingly, do not express an opinion on such information.

Schedule A-5: *Summary of Total Capitalization and the Weighted Average Cost of Capital*. Our review procedures were limited to the book amounts in the column titled "Total Capitalization Base Period."

Schedule B-1: *Original Cost of Plant in Service by Primary Account*. Our review procedures were limited to the book amounts on lines 9, 13, 15 and 17 in the column titled "Base Period Ending Balance Jun-26."

Schedule B-2: *Original Cost of Plant in Service by Detail Account*. Our review procedures were limited to the book amounts on lines 20, 34, 47, 62, 76, 92, 115, 142, 151 and 153 in the column titled "Base Period Ending Balance Jun-26."

Schedule B-3: *Original Cost of Plant in Service by Monthly Balances*. Our review procedures were limited to the book amounts on lines 68, 141, 248, 351, 354, 356, 397, 467, 686, 744, 746, 753 and 755 in the column titled "Base Period Ending Balance 6/30/26."

Schedule B-4: *Construction Work in Progress*. Our review procedures were limited to the book amounts on lines 461, 645, 676, 686, 712, 720, 725, 729, 734, 757, 768, 786, 810, 821, 829, 847 and 852 in the column titled "Base Period Ending Balance Jun-26."

Schedule B-6: *Original Cost of Plant in Service – Plant Held for Future Use*. Our review procedures were limited to the book amounts in the column titled "Unadjusted Base Period Balance Jun-26."

Schedule B-7: *Nuclear Fuel in Process*. Our review procedures were limited to the book amounts in the column titled "Base Period Ending Balance."

Schedule C-1: *Accumulated Provision for Depreciation and Amortization by Functional Classification*. Our review procedures were limited to the book amounts on lines 68, 141, 248, 351, 354, 356, 397, 467, 686, 744, 746 and 755 in the column titled "Base Period Ending Balance 6/30/2026."

Schedule E-2: *Materials, Supplies, Prepayments, and Deferred Charges*. Our review procedures were limited to the book amounts on lines 17, 35 and 41 in the column titled "Base Period Balance 6/30/2026."

Schedule E-3: *Fuel Inventories by Plant*. Our review procedures were limited to the book amounts on line 9 in the column titled "Base Period Balance 6/30/2026."

Schedule F-1: *Other Property and Investments*. Our review procedures were limited to the book amounts on lines 13 and 15 in the column titled "Base Period Ending Balance Jun-26."

Schedule G-1: *Capitalization, the Cost of Capital and the Overall Rate of Return (After-tax)*. Our review procedures were limited to the book amounts in the column titled "Total Capitalization Base Period (in thousands)."

Schedule G-3: *Embedded Cost of Borrowed Capital with Term of Maturity in Excess of One Year from Date of Issue – Base Period Ending 6/30/2026*. Our review procedures were limited to the book amounts in the column titled "Principal Outstanding."

Schedule G-5: *Embedded Cost of Preferred Stock Capital*. Our review procedures were limited to the book amounts in the column titled "Principal Outstanding (in thousands)."

Schedule G-6: *Ratio of Earnings to Fixed Charges*. Our review procedures were limited to the book amounts on lines 12 through 18, lines 21 through 25, and lines 28 through 33, in the column titled "Base Period Jul-25 – Jun-26" excluding line 16, "e. Estimated Interest Factor of Lease Rental Charges."

Schedule G-9: *Historical Activity in Common Stock, Paid-in-Capital and Retained Earnings (in thousands)*. Our review procedures were limited to the book amounts on lines 17, 23, 30 and 36 in the column titled "Base Year Ending 6/30/2026."

Schedule H-1: *Summary of Operations and Maintenance Expense*. Our review procedures were limited to the book amounts in the column titled "Total Company Unadjusted Base Period."

Schedule H-4: *Payroll Distribution and Associated Payroll Taxes*. Our review procedures were limited to the book amounts on lines 19, 27, 38 and 40 in the column titled "Base Period."

Schedule H-7: *Depreciation and Amortization Expense*. Our review procedures were limited to the book amounts on lines 68, 141, 248, 351, 354, 356, 397, 467, 686, 744, 746, 753 and 755 in the column titled "Base Period Expense."

Schedule H-8: *Taxes Other Than Income Taxes*. Our review procedures were limited to the book amounts on lines 15, 28, 48 and 50 in the column titled "Base Period."

Schedule H-13: *Investment Tax Credits*. Our review procedures were limited to the book amounts in the column titled "Unadjusted Base Period."

Schedule H-15: *Expenses Associated with Non-Utility Services*. Our review procedures were limited to the book amounts in the column titled "Base Period Total."

Schedule I-1: *Balance Sheet*. Our review procedures were limited to the book amounts in the column titled "Books & Records 6/30/2026."

Schedule I-2: *Statement of Earnings*. Our review procedures were limited to the book amounts in the column titled "Per Financial Statements 12 months ending 6/30/2026."

Schedule I-3: *Statement of Cash Flows.* Our review procedures were limited to the book amounts in the column titled "Per Financial Statements 12 months ending 6/30/2026."

**Restriction of Use**

This report is intended solely for the information and use of board of directors, management of Public Service Company of New Mexico, and the New Mexico Public Regulation Commission and is not intended to be and should not be used by anyone other than these specified parties.

KPMG LLP

Cincinnati, Ohio
November 24, 2026